Volkswagen Passat

Official Factory Repair Manual

1995
Gasoline, Turbo Diesel, TDI
4-cylinder and VR6, including wagon

Robert Bentley

PASSAT '95 - '97

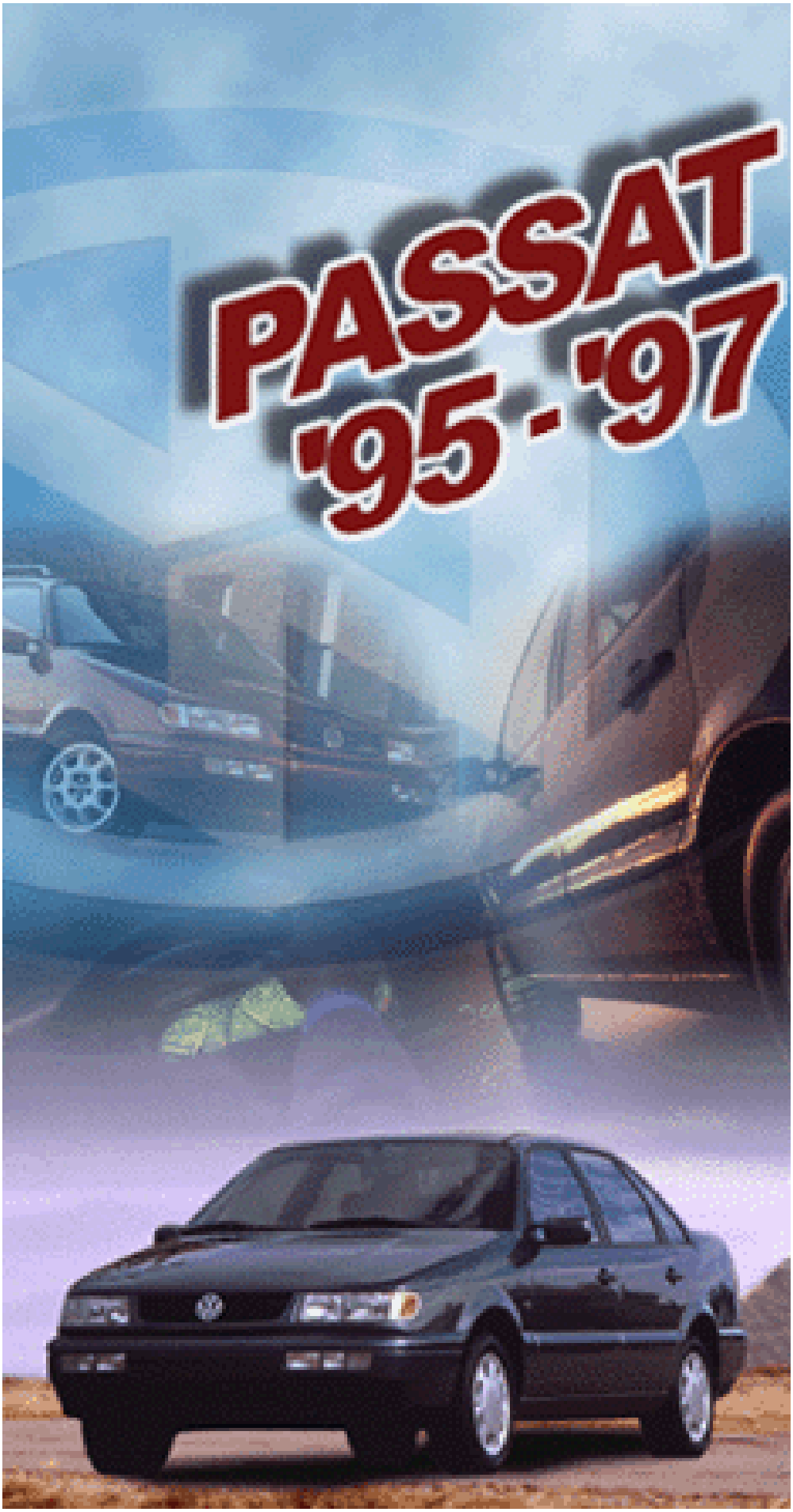

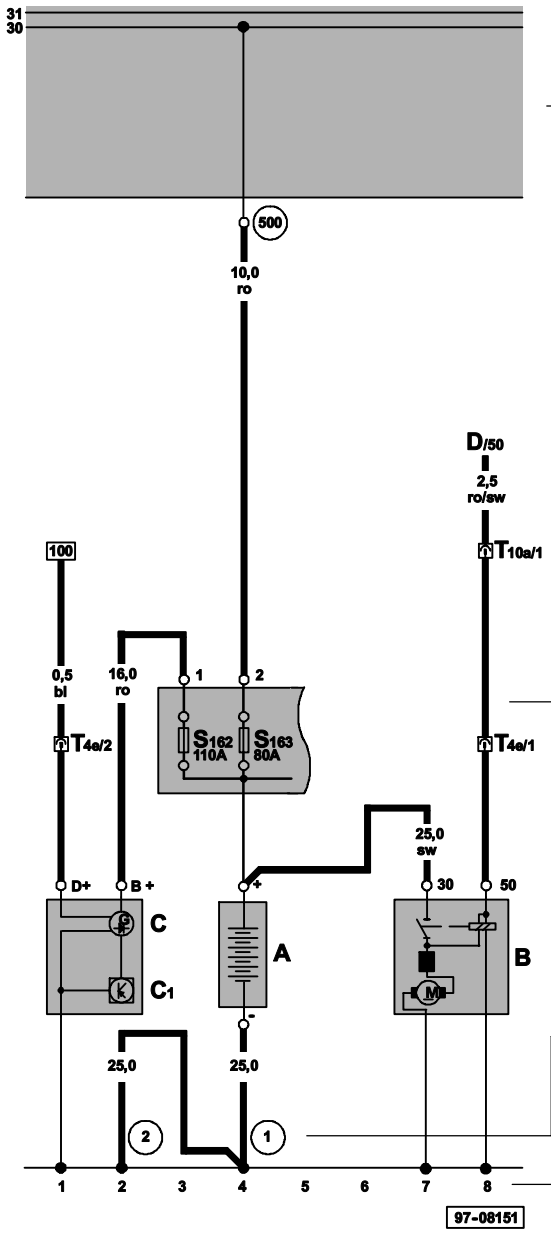

Relay panel
Indicated by grey area.

WIRING COLOR CODE		
ws	=	white
sw	=	black
ro	=	red
br	=	brown
gn	=	green
bl	=	blue
gr	=	grey
li	=	lilac
ge	=	yellow

Consumer circuit with wire routing
All switches and contacs are shown in the "off" position.

Vehicle ground
Numbers in circle indicate location on vehicle (see legend).

Current track number
Makes it easier to find the connections.

A - Battery
B - Starter
C - Generator (GEN)
C1 - Voltage Regulator (VR)
D - Ignition/Starter Switch
S162 - Fuse -1- (30) in fuse bracket / battery
S163 - Fuse -2- (30) in fuse bracket / battery
T4e - 4-Pin Connector, on transmission
T10a - 10-Pin Connector, on protective housing for control module, in engine compartment, left
(1) - Ground strap, battery to body
(2) - Ground strap, transmission to body
(500) - Screw connection -1- (30), on relay panel

Legend
In all wiring diagrams the same component designation (code) is used for a particular component; for example, always A for battery.

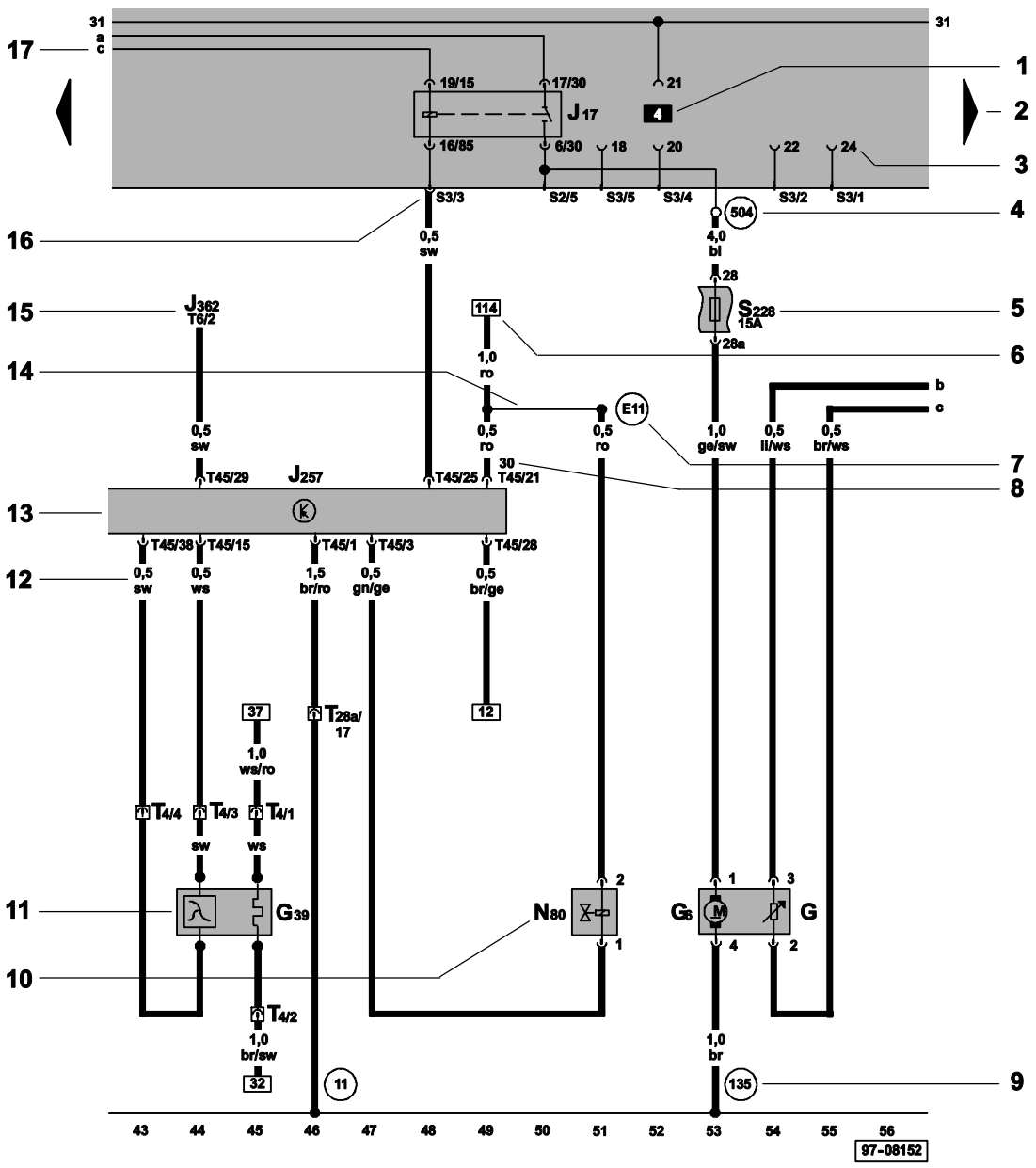
31
a
c
17
19/15
17/30
21
J17
4
16/85
6/30
18
20
22
24
S3/3
S2/5
S3/5
S3/4
S3/2
S3/1
504
0,5
sw
4,0
bl
28
S228
15A
28a
J362
T6/2
114
1,0
ro
E11
b
c
0,5
sw
0,5
ro
0,5
ro
1,0
ge/sw
0,5
ll/ws
0,5
br/ws
T45/29
J257
T45/25
30
T45/21
T45/38
T45/15
T45/1
T45/3
T45/28
0,5
sw
0,5
ws
1,5
br/ro
0,5
gn/ge
0,5
br/ge
37
T28a/
17
12
1,0
ws/ro
T4/4
T4/3
T4/1
sw
ws
G39
N80
G6
G
T4/2
1,0
br/sw
32
11
1,0
br
135
43
44
45
46
47
48
49
50
51
52
53
54
55
56
97-08152
1
2
3
4
5
6
7
8
9
10
11
12
13
14
15
16
17

1 - **Relay location number**
Indicates location on relay panel.

2 - **Arrow**
Indicates wiring circuit is continued on the previous and/or next page.

3 - **Connection designation - relay control module on relay panel**
Shows the individual terminals in a multi-point connector.
For example: contact 24 on terminal 4 on relay panel.

4 - **Diagram of threaded pin on relay panel**
White circle shows a detachable connection.

5 - **Fuse designation**
For example: S228 = Fuse number 28, 15 amps, in fuse holder

6 - **Reference of wire continuation (current track number)**
Number in frame indicates current track where wire is continued.

7 - **Wire connection designation in wiring harness**
Location of wire connections are indicated in the legend.

8 - **Terminal designation**
Designation which appears on actual component and/or terminal number of a multi-point connector.

9 - **Ground connection designation in wire harness**
Locations of ground connections are indicated in legend.

10 - **Component designation**
Use legend at bottom of page to identify the component code.

11 - **Component symbols (see page IV - VI)**

12 - **Wire cross-section size (in mm^2) and wire colors**
Abbreviations are explaining in color chart beside the wiring diagram.

13 - **Component symbol with open drawing side**
Indicated component is continued on another wiring diagram. The number of corresponding wiring diagram can taken from list of contents.

14 - **Internal connections (thin lines)**
These connections are **not** wires. Internal connections are current carrying and are listed to allow tracing of current flow inside components and wiring harness.

15 - **Reference of continuation of wire to component**
For example: Control module for anti-theft immobilizer J362 on 6-Pin Connector, terminal 2

16 - **Relay panel connectors**
Shows wiring of multi-point or single connectors on relay panel
For example: S3/3 - Multi-point connector S3, terminal 3

17 - **Reference of internal connection continuation**
Letters indicate where connection continues on the previous and/or next page.

Symbols used in wiring diagrams

Fuse

Thermo-fuse
(Circuit Breaker)

Battery

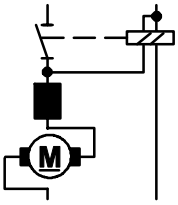

Starter

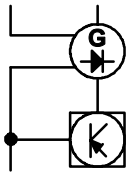

Generator (GEN)

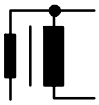

Ignition Coil

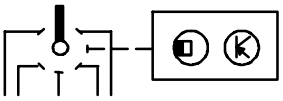

Distributor (electronic)

Spark plug connector
and plug

Glow plug
Heater element

Switch
(manually operated)

Switch
(thermally operated)

Push putton switch
(manually operated)

Switch
(mechanically operated)

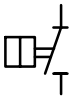

Switch
(pressure operated)

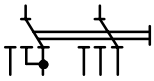

Multiple switch
(manually operated)

Resistance

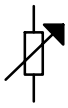

Variable resistor
(Rheostat)

Resistor
temperature dependent

Heater element
temperature dependent

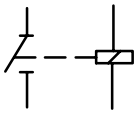

Relay

97-12201

	Diode		Solenoid valve
	Zener diode		Magnetic clutch
	Diode light sensitiv		Wire connector
	Light bulb		Pin connector
	Light bulb (dual filament)		Multi-point connector at component
	LED		Internal connections in component
	Interior light		Wire connection detachable
	Instrument (Gauge)		Wire connection fixed
	Electronic control module		Wire connection in wiring harness
	Rear window defogger heat element		Resistance wire
	Cigarette lighter		Shield wire

97-08153

Symbols used in wiring diagrams

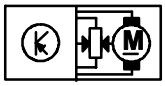

Control motor,
headlight range adjustment

Motor

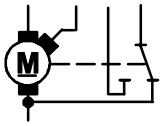

Wiper motor
2-speed

Crankshaft position sensor
(CKP)

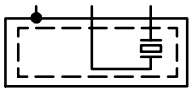

Knock sensor (KS)

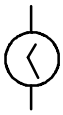

Analog clock

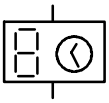

Digital clock

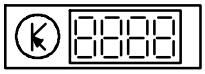

Multi-function
indicator

Airbag spiral spring

Speed sensor

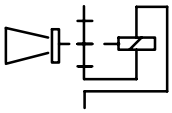

Horn

Speeker

Antenna with electronic
antenna amplifier

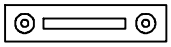

Radio

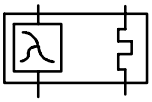

Heated oxygen sensor

97-08154

Starting with the reported problem, troubleshooting procedures show step-by-step **what** is checked and **how** it is checked in order to find the problem in the quickest and most reliable way. If several causes (of a problem) are possible in one system, a test procedure is used for diagnosis.

Structure of a Test step:

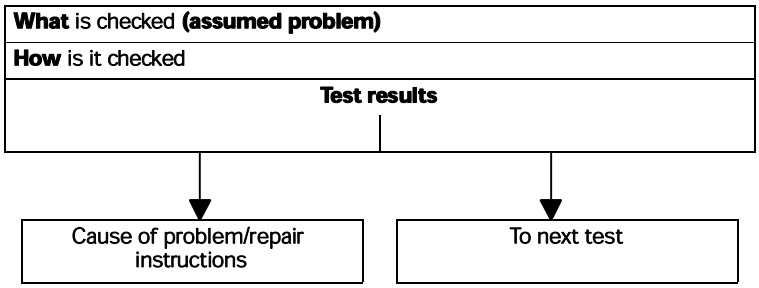

Example of a troubleshooting procedure:

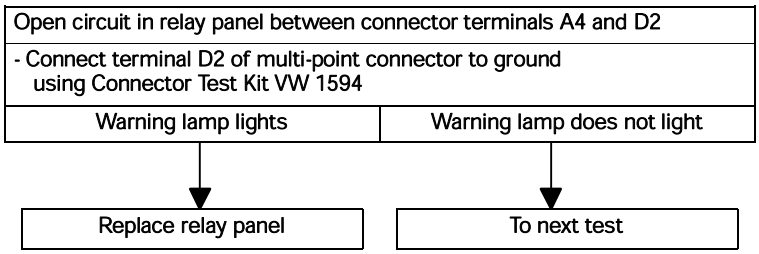

Passat (2.8L-Engine - Motronic Multiport Fuel Injection (MFI)/128kW), code AAA, from August 1994

	Diagram Title	Num/Page
-	Passat (2.8L-Engine - Motronic Multiport Fuel Injection (MFI)/128kW), code AAA, from August 1994	02/01
-	Battery, ignition/starter switch	01/02
-	Fresh air blower	01/03
-	Coolant fan, two speeds	03/01
-	Generator (GEN), starter, fuel pump (FP), fuel level sensor	02/02
-	Ignition system, motronic engine control module (ECM), heated oxygen sensor (HO2S), heated oxygen sensor (HO2S) relay	02/03
-	Motronic engine control module (ECM), knock sensors, throttle position (TP) sensor, engine coolant temperature (ECT) sensor	02/04
-	Motronic engine control module (ECM), injectors, mass air flow (MAF) sensor	02/05
-	Motronic engine control module (ECM), EGR vacuum regulator solenoid valve, EGR temperature sensor	02/06
-	Motronic engine control module (ECM) power supply relay, secondary air injection (AIR) system	02/07
-	Instrument cluster, engine coolant level/temperature (ECL/ECT) warning light, visual and acoustical oil pressure control, odometer display, fuel gauge	02/09
-	Instrument cluster, tachometer	01/05
-	Instrument cluster, digital clock	01/06
-	Instrument cluster, outside air temperature sensor, parking brake warning light switch and brake fluid level warning light switch	01/07
-	Interior light, luggage compartment light, radio/parking light warning buzzer, seat belt warning system relay, door contact switch	01/08
-	Data link Connector (DLC) wire connection, radio connection, cigarette lighter, ashtray light	01/09
-	Headlights, front side markers, headlight dimmer flasher switch	01/10
-	Turn signal and emergency flasher system, parking light switch	01/11
-	Tail lights, brake lights, turn signal lights	01/12
-	Light switch, right front turn signal light	01/13
-	Fog lights, license plate lights, back-up lights	01/14
-	Rear window defogger heat element, dual horns	01/15
-	Windshield wiper/washer system	01/16
-	Rear window wiper/washer system, ABS warning light, airbag malfunction indicator lamp (MIL), brake and parking brake warning light	01/17

Passat (1.9L-Engine - Turbo Diesel Fuel Injection (DFI)/55kW), code AAZ, from August 1994

Diagram Title	Num/Page
- Passat (1.9L-Engine - Turbo Diesel Fuel Injection (DFI)/55kW), code AAZ, from August 1994	17/01
- Battery, ignition/starter switch	01/02
- Fresh air blower	01/03
- Coolant fan, two speeds, 250W, code AAZ, from August 1994	04/01
- Generator (GEN), starter	17/02
- Automatic glow time control module, fuel cut-off valve, idle air control (IAC) solenoid, injection start positioner	17/03
- Spark plugs, engine temperature sensor	17/04
- Visual and acoustical oil pressure control, positive crankcase ventilation (PCV) heating element, fuel gauge	17/05
- Instrument cluster, tachometer	01/05
- Instrument cluster, digital clock	01/06
- Instrument cluster, outside air temperature sensor, parking brake warning light switch and brake fluid level warning light switch	01/07
- Interior light, luggage compartment light, radio/parking light warning buzzer, seat belt warning system relay, door contact switch	01/08
- Data link Connector (DLC) wire connection, radio connection, cigarette lighter, ashtray light	01/09
- Headlights, front side markers, headlight dimmer flasher switch	01/10
- Turn signal and emergency flasher system, parking light switch	01/11
- Tail lights, brake lights, turn signal lights	01/12
- Light switch, right front turn signal light	01/13
- Fog lights, license plate lights, back-up lights	01/14
- Rear window defogger heat element, dual horns	01/15
- Windshield wiper/washer system	01/16
- Rear window wiper/washer system, ABS warning light, airbag malfunction indicator lamp (MIL), brake and parking brake warning light	01/17

Passat (2.0L-Engine - Motronic Multiport Fuel Injection (MFI)/85kW), code ABA, from February 1995

Diagram Title	Num/Page
- Passat (2.0L-Engine - Motronic Multiport Fuel Injection (MFI)/85kW), code ABA, from February 1995	24/01
- Battery, ignition/starter switch	01/02
- Fresh air blower	01/03
- Coolant fan, two speeds	03/01
- Generator (GEN), starter, fuel pump (FP), fuel level sensor	24/02
- Motronic engine control module (ECM), heated oxygen sensor (HO2S) relay, heated oxygen sensor (HO2S), fuel pump (FP) relay	24/03
- Motronic engine control module (ECM), knock sensor (KS), throttle position (TP) sensor, engine coolant temperature (ECT) sensor, intake air temperature (IAT) sensor, EGR temperature sensor	24/04
- Motronic engine control module (ECM), injectors, idle air control (IAC) valve, mass air flow (MAF) sensor	24/05
- Motronic engine control module (ECM), motronic engine control module (ECM) power supply relay, engine speed (RPM) sensor	24/06
- Speedometer vehicle speed sensor (VSS), outside air temperature sensor, oil temperature sensor, oil pressure switch	24/07
- Instrument cluster, engine coolant level/temperature (ECL/ECT) warning light, visual and acoustical oil pressure control, fuel gauge, odometer display	24/08
- Instrument cluster, speedometer, multi-function indicator memory switch	24/09
- Instrument cluster, tachometer	01/05
- Instrument cluster, digital clock	01/06
- Instrument cluster, outside air temperature sensor, parking brake warning light switch and brake fluid level warning light switch	01/07
- Interior light, luggage compartment light, radio/parking light warning buzzer, seat belt warning system relay, door contact switch	01/08
- Data link Connector (DLC) wire connection, radio connection, cigarette lighter, ashtray light	01/09
- Headlights, front side markers, headlight dimmer flasher switch	01/10
- Turn signal and emergency flasher system, parking light switch	01/11
- Tail lights, brake lights, turn signal lights	01/12
- Light switch, right front turn signal light	01/13
- Fog lights, license plate lights, back-up lights	01/14
- Rear window defogger heat element, dual horns	01/15
- Windshield wiper/washer system	01/16
- Rear window wiper/washer system, ABS warning light, airbag malfunction indicator lamp (MIL), brake and parking brake warning light	01/17

Common Systems

	Diagram Title	Num/Page
-	Airbag, from August to September 1994	25/01
-	Airbag, from October	18/01
-	Air conditioning, 2.8L Engine-Motronic Multiport Fuel Injection (MFI)/128kW, code AAA, from August 1994	06/01
-	Air conditioning, 2.0L Engine-Motronic Multiport Fuel Injection (MFI)/85kW, code ABA, from February 1995	26/01
-	Air Conditioning, 1.9L Engine-Turbo Diesel Fuel Injection (DFI)/55kW, code AAZ, from August 1994	05/01
-	Anti-lock brake system (ABS) with electronic differntial lock (EDL), from August 1994	13/01
-	Automatic transmission, from August 1994	19/01
-	Automatic transmission, 2.8L Engine - Motronic Mulitport Fuel Injection (MFI)/128kW, code AAA, from January 1995	27/01
-	Automatic transmission, 2.0L Engine - Motronic Multiport Fuel Injection (MFI)/85kW, code ABA, from January 1995	27/01
-	Central locking system and anti-theft alarm system, from August 1994	15/01
-	Coolant fan, three speeds, 450W, code AAZ, from August 1994	22/01
-	Coolant fan, three speeds, 450W, code AAA, from August 1994	21/01
-	Coolant fan, two speeds, 250W, code AAA, from August 1994	03/01
-	Coolant fan, two speeds, 250W, code AAZ, from August 1994	04/01
-	Cruise control, from August 1994	14/01
-	Daytime running lights only Canada, from August 1994	23/01
-	Dual horns, from August 1995	01/15
-	Front and rear power windows, from August 1994	07/01
-	Heated seats, from August 1994	08/01
-	Heated power mirrors, from August 1994	10/01
-	Heated washer nozzles, from August 1994	11/01
-	Interior light with delay switch, rear reading lights, make-up mirror lights from August 1994	09/01
-	Power sunroof, from August 1994	16/01
-	Rear window wiper/washer system, from August 1994	01/17
-	Stereo radio with CD-changer and eight speakers, from August 1994	20/01
-	Trunk lid release, sedan only, from August 1994	12/01

Passat – Standard Equipment,

from August 1994

Relay location
For relay location and multiple connectors see also section "component locations".

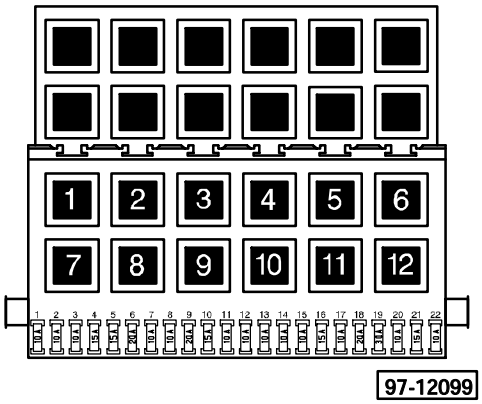

2 – Rear Window Wiper/Washer Relay (72)

4 – Load Reduction Relay (18)

6 – Emergency Flasher Relay (21)

8 – Washer/Wiper Intermittent Relay (19, 99)

9 – Warning Buzzer for Parking Light and Radio (36)

11 – Dual Horn Relay (53)

– Seat Belt Warning System Relay (4)

Note: Number in parentheses indicates production control number stamped on relay housing.

Fuse colors

30A – green
25A – white
20A – yellow
15A – blue
10A – red

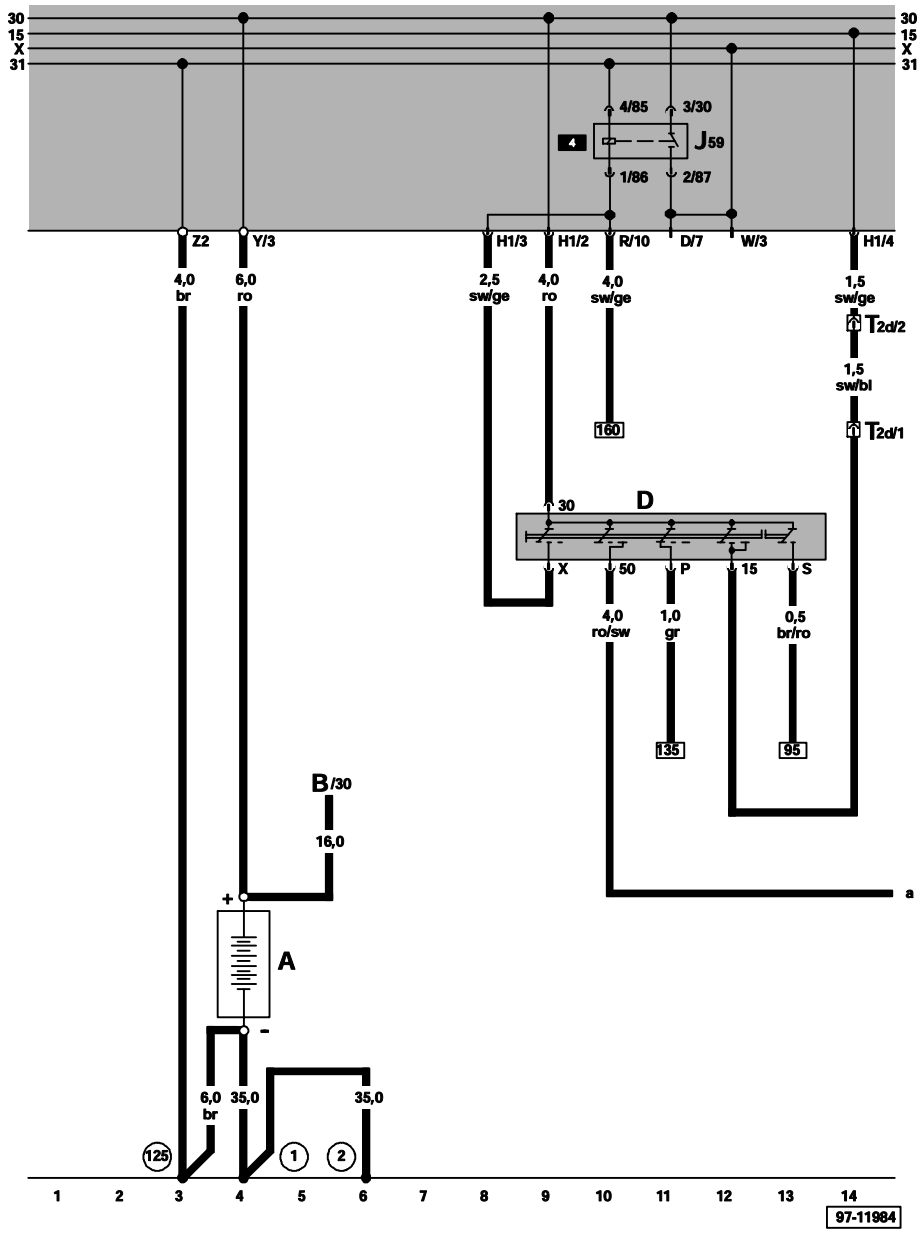

ws = white
sw = black
ro = red
br = brown
gn = green
bl = blue
gr = grey
li = violet
ge = yellow

A – Battery
B – Starter
D – Ignition/Starter Switch
J59 – Load Reduction Relay
T2d – Double Connector, behind fuse/relay panel

(1) – Ground strap, battery to body

(2) – Ground strap, transmission to body

(125) – Ground connection –3–, in headlight wiring harness

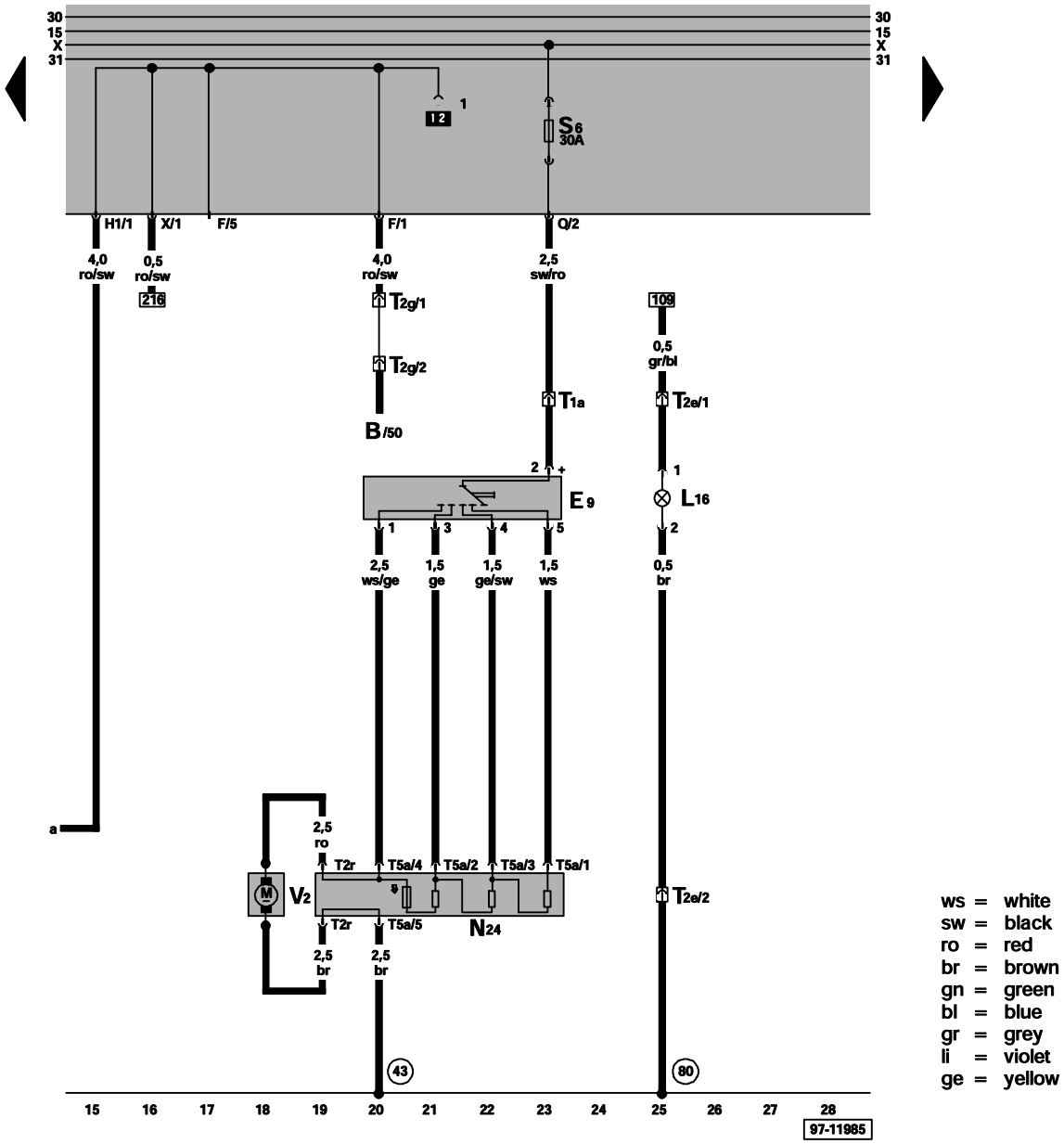

ws = white
sw = black
ro = red
br = brown
gn = green
bl = blue
gr = grey
li = violet
ge = yellow

B – Starter
E9 – Fresh Air Blower Switch
L16 – Fresh Air Control Lever Light
N24 – Fresh Air Blower Series Resistance With Fuse
T1a – Single Connector, behind instrument panel, center
T2e – Double Connector, behind instrument panel, center
T2g – Double Connector, behind fuse/relay panel
T2r – Double Connector
T5 – 5-Pin Connector
V2 – Fresh Air Blower

43 – Ground connection, on right A–pillar, lower part
80 – Ground connection –1–, in instrument panel wiring harness

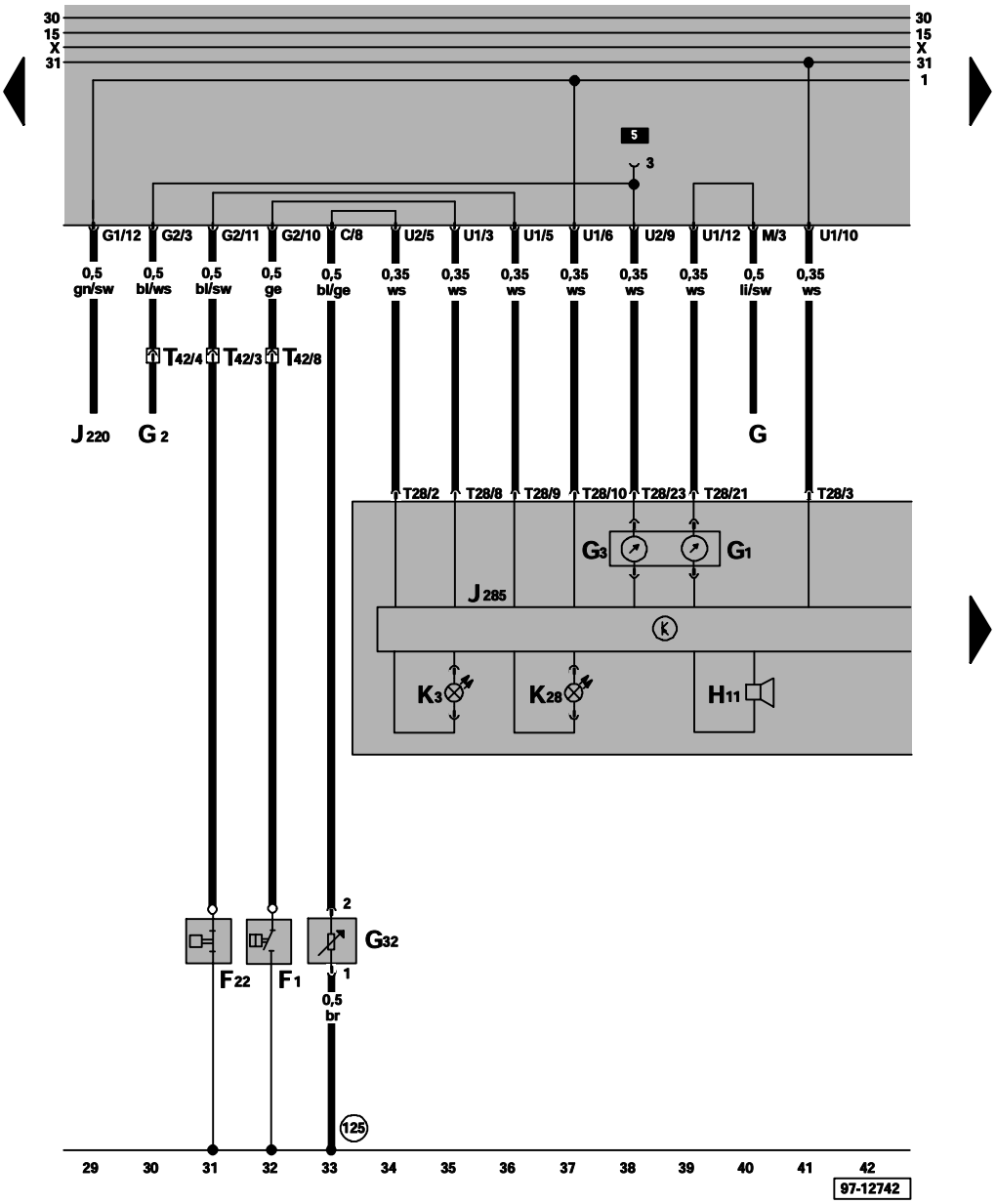

ws = white
sw = black
ro = red
br = brown
gn = green
bl = blue
gr = grey
li = violet
ge = yellow

F1 – Oil Pressure Switch *
F22 – 0.3 Bar Oil Pressure Switch
G – Fuel Level Sensor
G1 – Fuel Gauge
G2 – Engine Coolant Temperature (ECT) Sensor
G3 – Engine Coolant Temperature (ECT) Gauge
G32 – Engine Coolant Level (ECL) Sensor
H11 – Oil Pressure Warning Buzzer
J220 – Motronic Engine Control Module (ECM)
J285 – Control Module With Display Unit In Instrument Cluster
K3 – Oil Pressure Warning Light
K28 – Engine Coolant Level/Temperature (ECL/ ECT) Warning Light
T28 – 28-Pin Connector, on instrument cluster
T42 – 42-Pin Connector, on left cylinder head

125 – Ground connection –3–, in headlight wiring harness

* – Switch levels see Repair Manual Passat 1994 " Engine

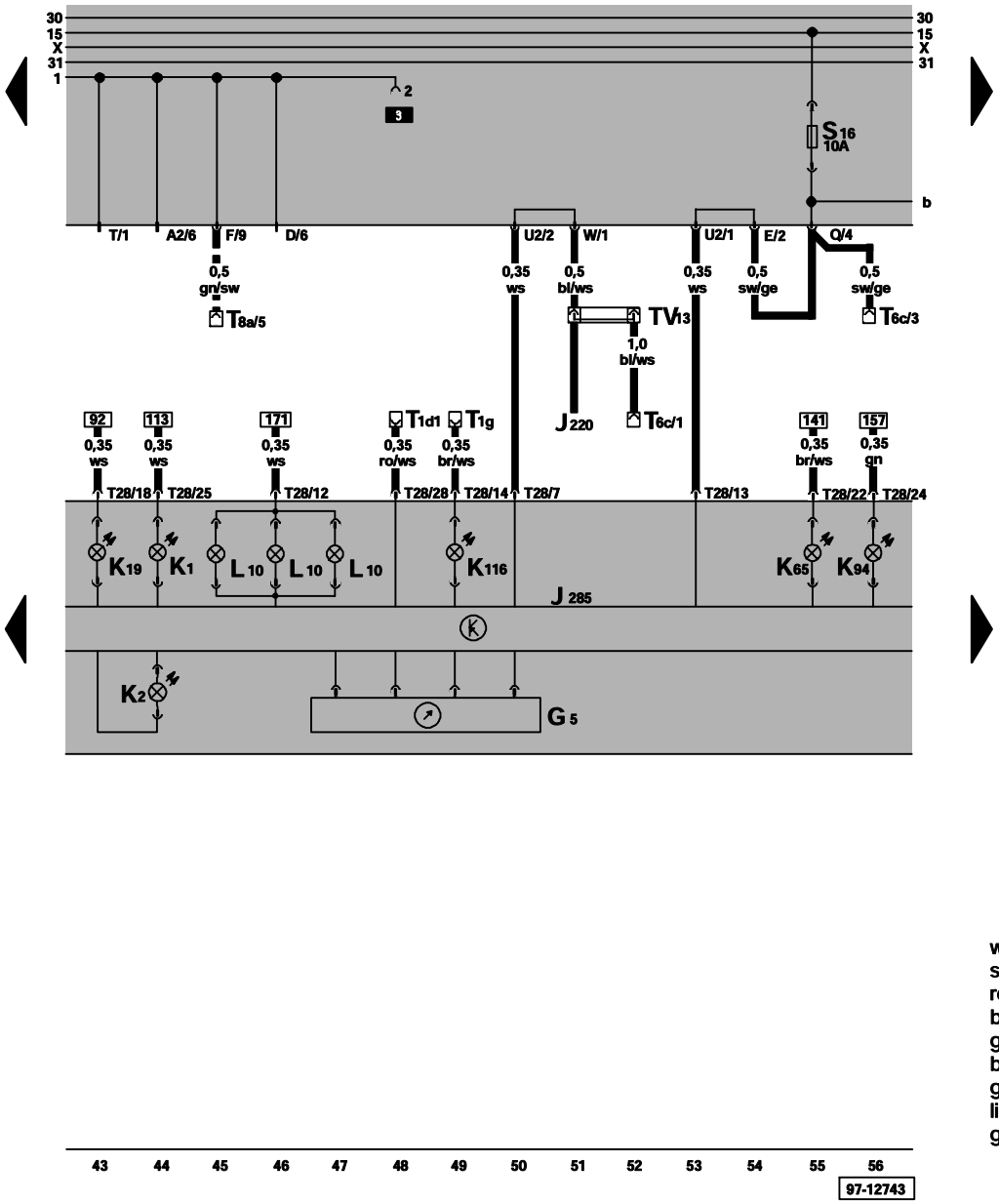

ws = white
sw = black
ro = red
br = brown
gn = green
bl = blue
gr = grey
li = violet
ge = yellow

G5 – Tachometer
J220 – Motronic Engine Control Module (ECM)
J285 – Control Module With Display Unit In Instrument Cluster
K1 – Headlight High Beam Indicator Light
K2 – Generator (GEN) Warning Light
K19 – Seat Belt Warning Light
K65 – Left Turn Signal Indicator Light
K94 – Right Turn Signal Indicator Light
K116 – Warning Light For Rear Lid Unlocked, sedan only
L10 – Instrument Cluster Light
T1d – Single Connector, behind fuse/relay panel
T1g – Single Connector, behind fuse/relay panel
T6c – 6-Pin Connector, behind fuse/relay panel
T8a – 8-Pin Connector, behind fuse/relay panel
T28 – 28-Pin Connector, on instrument cluster
TV13 – Vehicle Speed Signal Wire Connector, above fuse/relay panel

▬▬ – Automatic transmission only

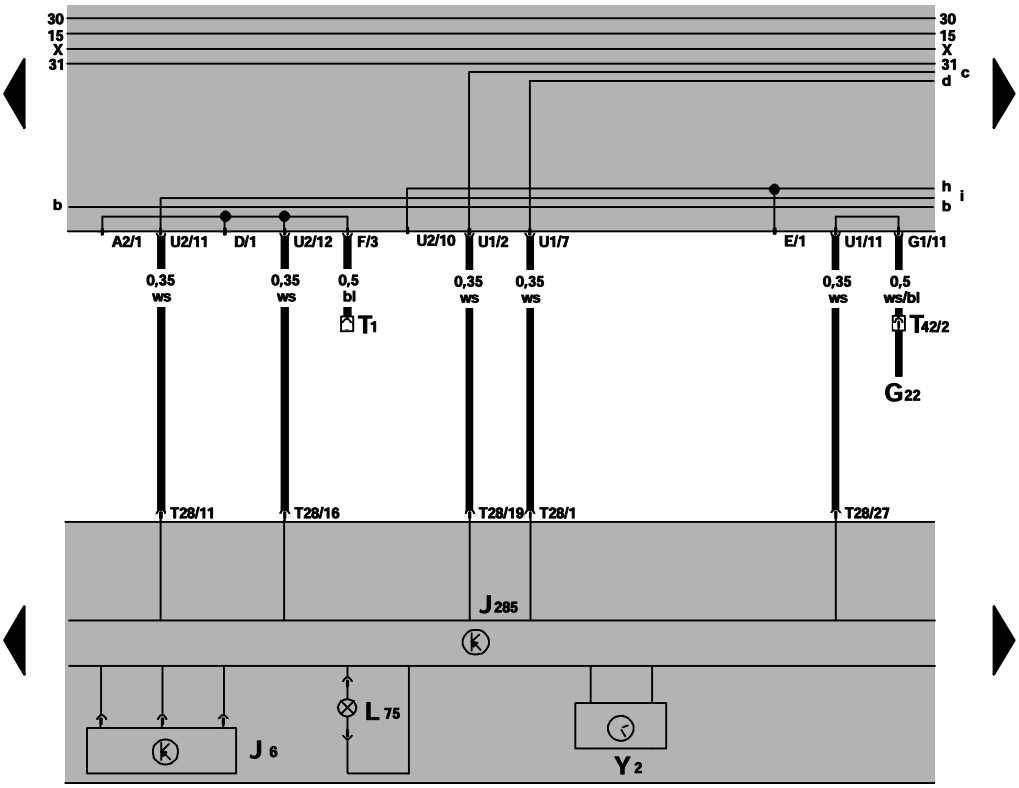

ws = white
sw = black
ro = red
br = brown
gn = green
bl = blue
gr = grey
li = violet
ge = yellow

57 58 59 60 61 62 63 64 65 66 67 68 69 70

97-12744

G22 – Speedometer Vehicle Speed Sensor (VSS) (hall generator, on transmission)
J6 – Voltage Stabilizer
J285 – Control Module With Display Unit In Instrument Cluster
L75 – Digital Display Light
T1 – Single Connector, near starter
T28 – 28-Pin Connector, on instrument cluster
T42 – 42-Pin Connector, on left cylinder head
Y2 – Digital clock

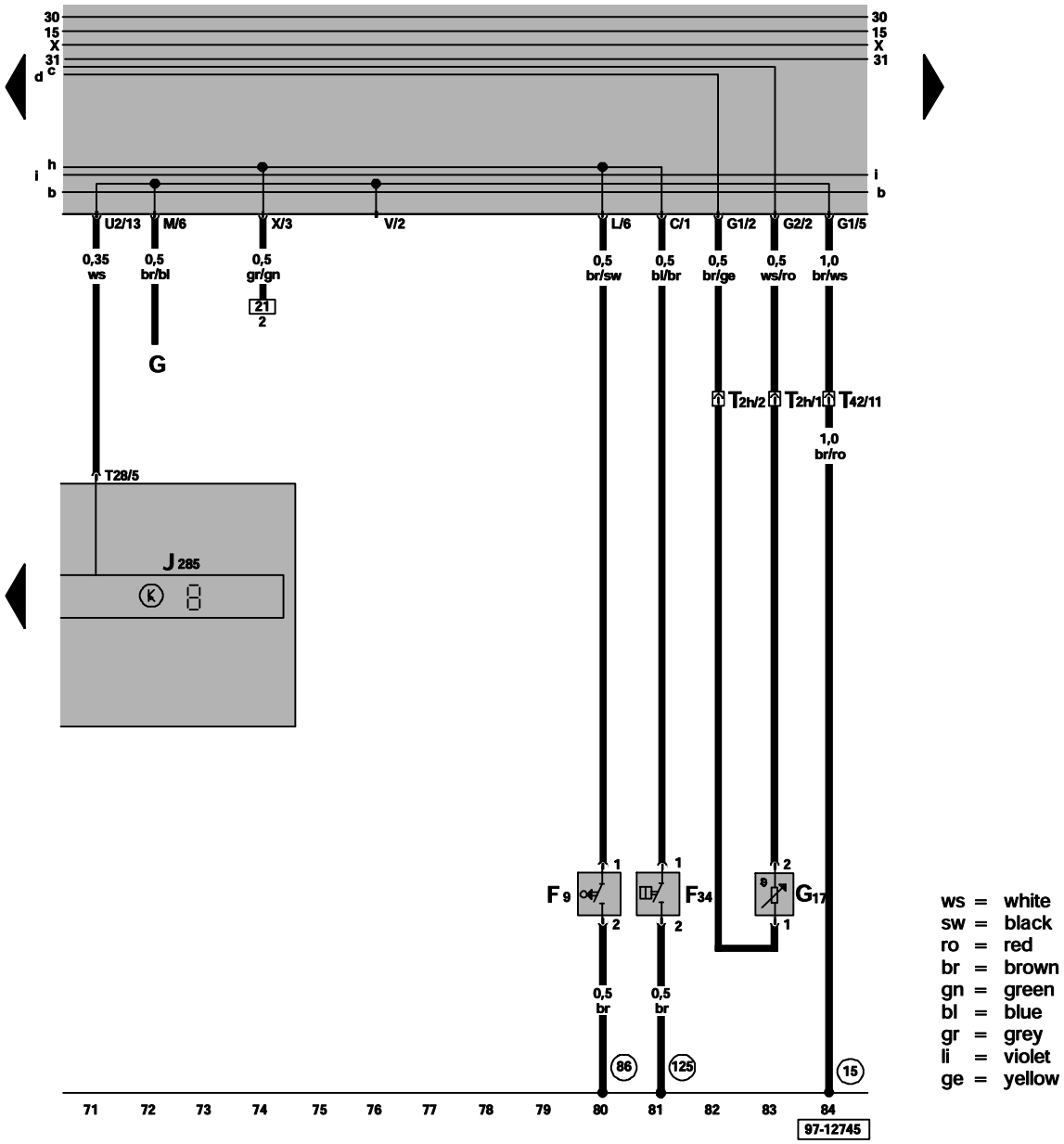

F9 – Parking Brake Warning Light Switch
F34 – Brake Fluid Level Warning Switch
G – Fuel Level Sensor
G17 – Outside Air Temperature Sensor
J285 – Control Module With Display Unit In Instrument Cluster
T2 – Double Connector, in engine compartment, right front
T28 – 28-Pin Connector, on instrument cluster
T42 – 42-Pin Connector, on left cylinder head

(15) – Ground connection, on cylinder head

(86) – Ground connection –1–, in rear wiring harness

(125) – Ground connection –3–, in headlight wiring harness

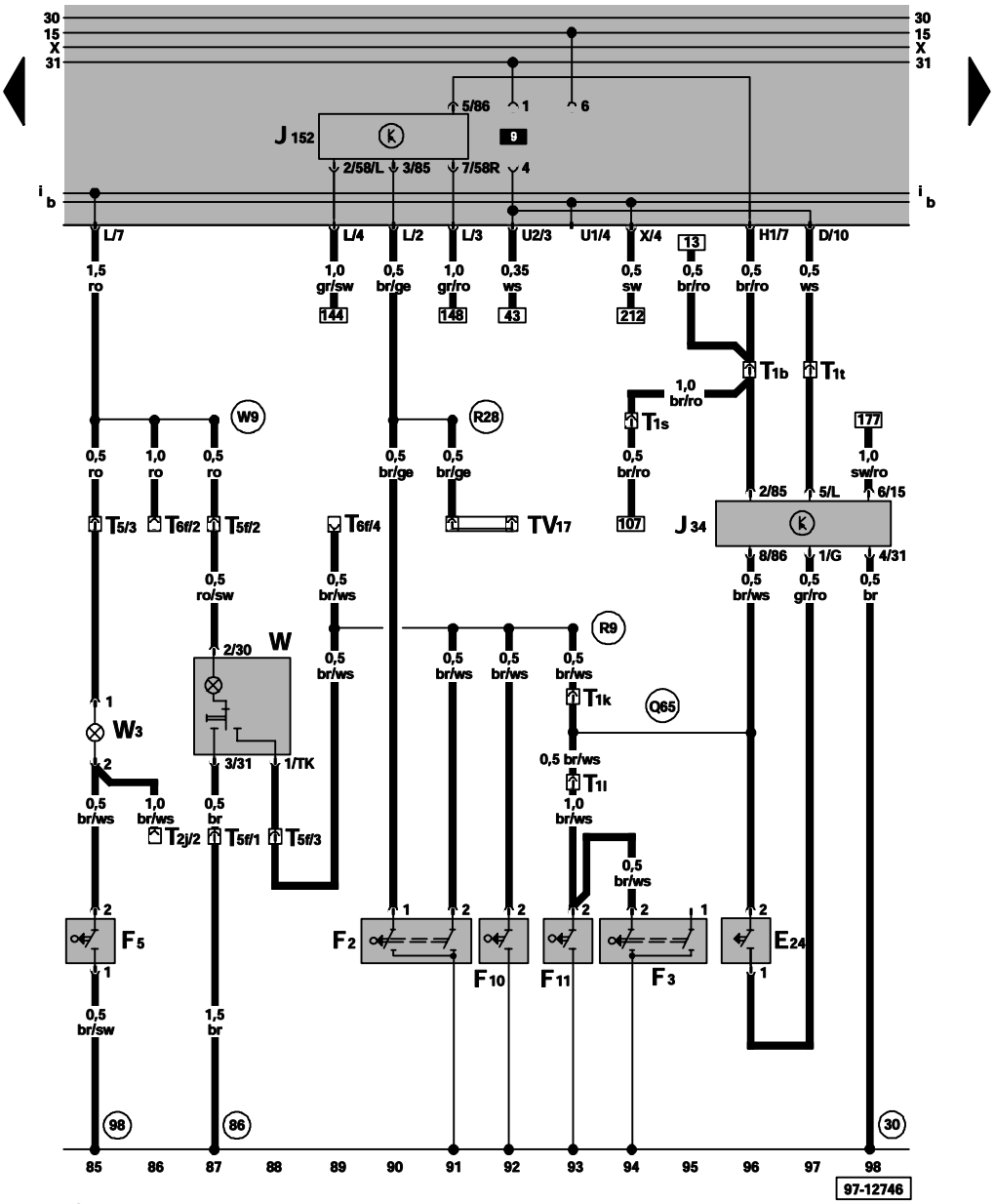

ws = white
sw = black
ro = red
br = brown
gn = green
bl = blue
gr = grey
li = violet
ge = yellow

E24 – Left Seat Belt Switch
F2 – Left Front Door Contact Switch
F3 – Right Front Door Contact Switch
F5 – Luggage Compartment Light Switch
F10 – Left Rear Door Contact Switch
F11 – Right Rear Door Contact Switch
J34 – Seat Belt Warning System Relay
J152 – Radio/Parking Light Warning Buzzer
T1b – Single Connector, behind fuse/relay panel
T1k – Single Connector, in luggage compartment
T1l – Single Connector, behind fuse/relay panel
T1t – Single Connector, behind fuse/relay panel
T2j – Double Connector, behind fuse/relay panel
T5 – 5-Pin Connector, in luggage compartment, left
T5f – 5-Pin Connector, on left A–pillar, near fuse/relay panel
T6f – 6-Pin Connector, behind fuse/relay panel
TV17 – Door Contact Switch Wire Connector, above fuse/relay panel

W – Front Interior Light
W3 – Luggage Compartment Light

30 – Ground connection, –1–, beside fuse/relay panel

86 – Ground connection –1–, in rear wiring harness

98 – Ground connection, in rear lid wiring harness

Q65 – Wire connection, in seat belt warning system wiring harness

R28 – Wire connection –2– (door contact switch), in rear wiring harness

W9 – Plus connection (30), in rear wiring harness

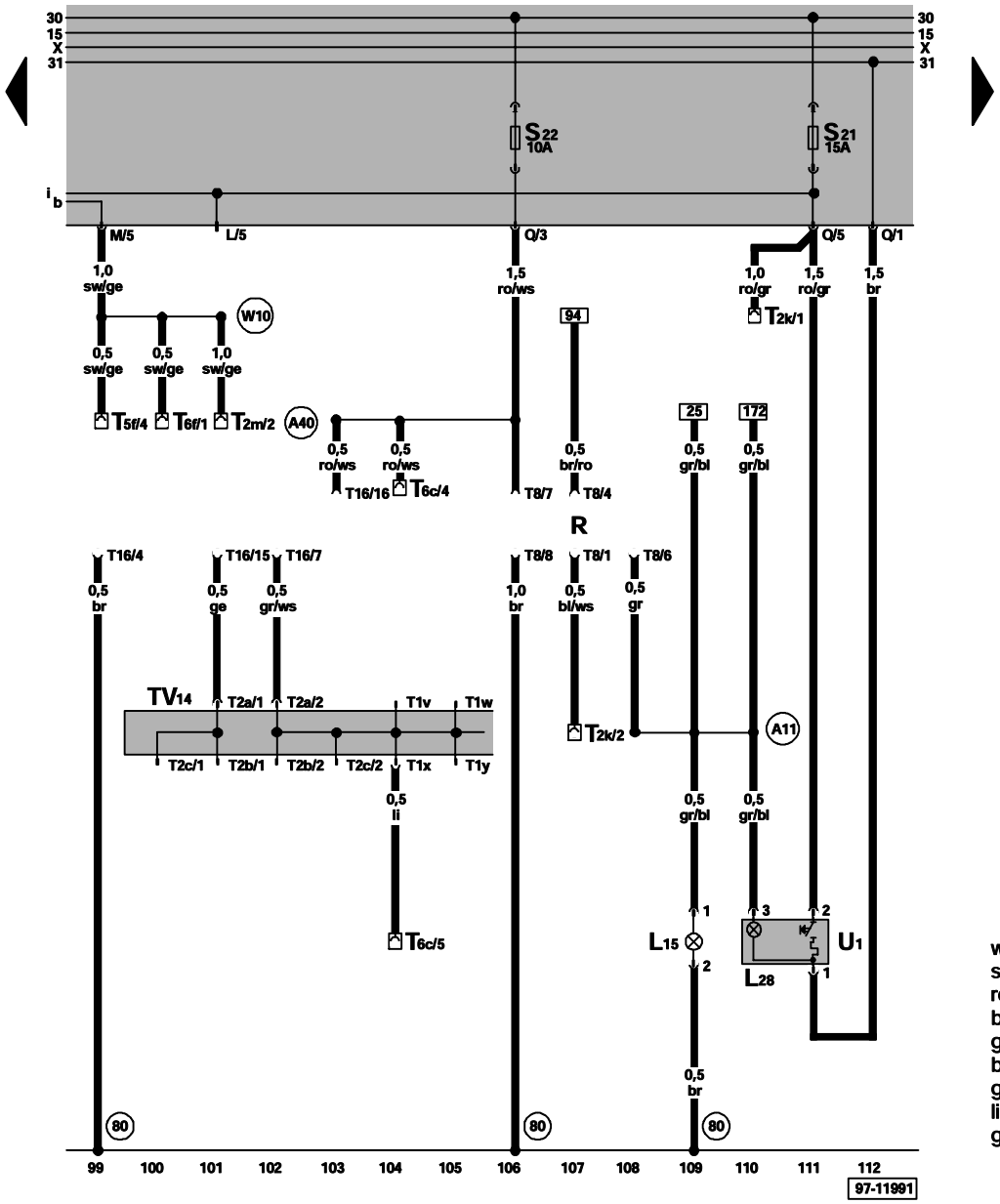

ws = white
sw = black
ro = red
br = brown
gn = green
bl = blue
gr = grey
li = violet
ge = yellow

L15 – Ashtray Light
L28 – Cigarette Lighter Light
R – Radio
T1v – Single Connector
T1w – Single Connector
T1x – Single Connector
T1y – Single Connector
T2a – Double Connector
T2b – Double Connector
T2c – Double Connector
T2k – Double Connector, behind fuse/relay panel
T2m – Double Connector, behind fuse/relay panel
T5f – 5-Pin Connector, on left A-pillar, near fuse/relay panel
T6c – 6-Pin Connector, behind fuse/relay panel
T6f – 6-Pin Connector, behind fuse/relay panel
T8 – 8-Pin Connector, on radio
T16 – 16-Pin Connector,On Board Diagnostic (OBD), beside Ignition/Starter Switch
TV14 – Data Link Connector (DLC) Wire Connector, behind console
U1 – Cigarette Lighter
80 – Ground connection –1–, in instrument panel wiring harness
A11 – Plus connection (58b) in instrument panel wiring harness
A40 – Plus connection (30), in instrument panel wiring harness
W10 – Plus connection (15), in rear wiring harness

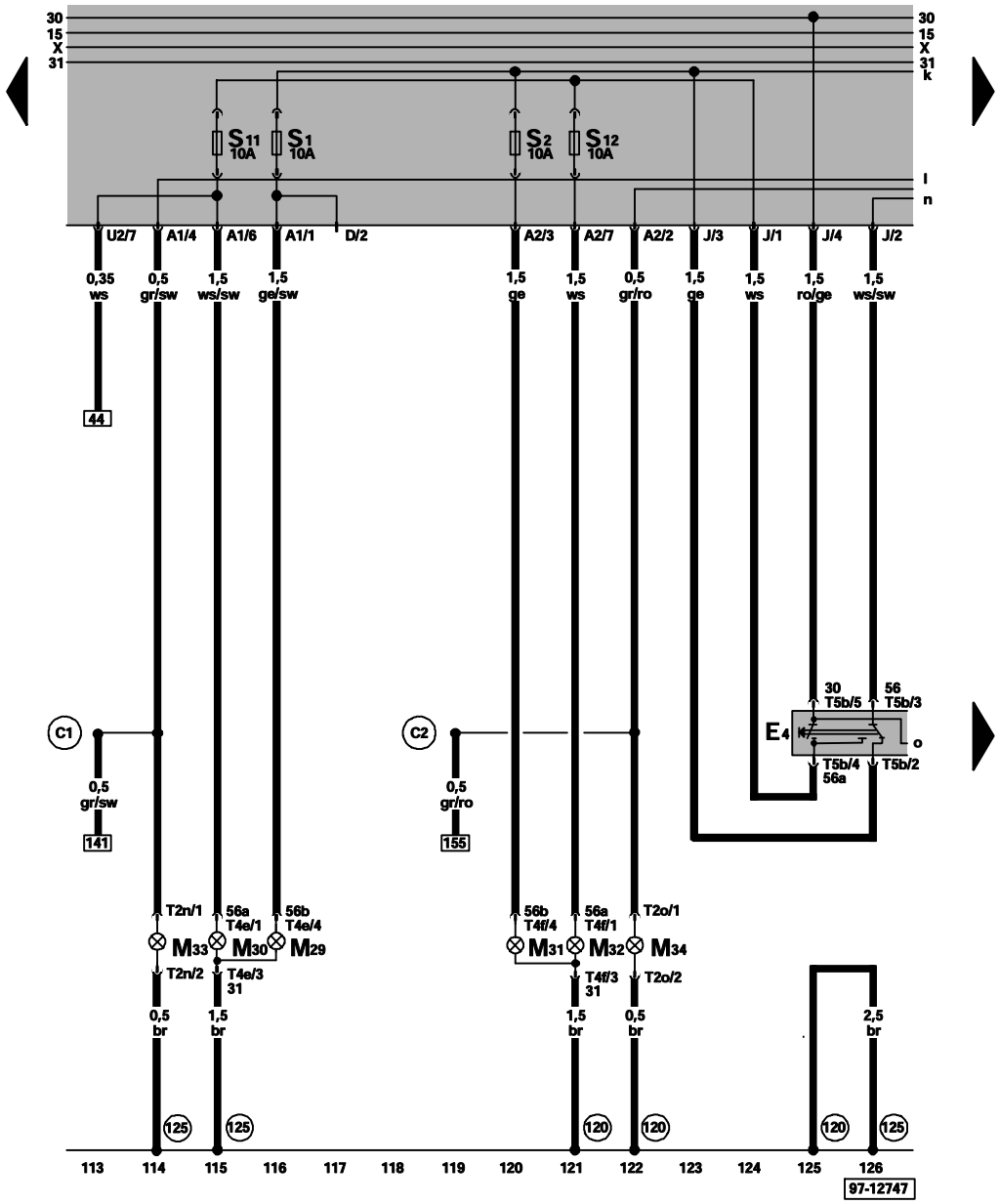

ws = white
sw = black
ro = red
br = brown
gn = green
bl = blue
gr = grey
li = violet
ge = yellow

E4 – Headlight Dimmer/Flasher Switch
M29 – Left Low Beam Headlight
M30 – Left High Beam Headlight
M31 – Right Low Beam Headlight
M32 – Right High Beam Headlight
M33 – Left Front Side Marker Light
M34 – Right Front Side Marker Light
T2n – Double Connector
T2o – Double Connector
T4e – 4-Pin Connector
T4f – 4-Pin Connector
T5b – 5-Pin Connector, behind steering column switch cover

(120) – Ground connection –2–, in headlight wiring harness

(125) – Ground connection –3–, in headlight wiring harness

(C1) – Plus connection (58L), in left front wiring harness

(C2) – Plus connection (58R), in left front wiring harness

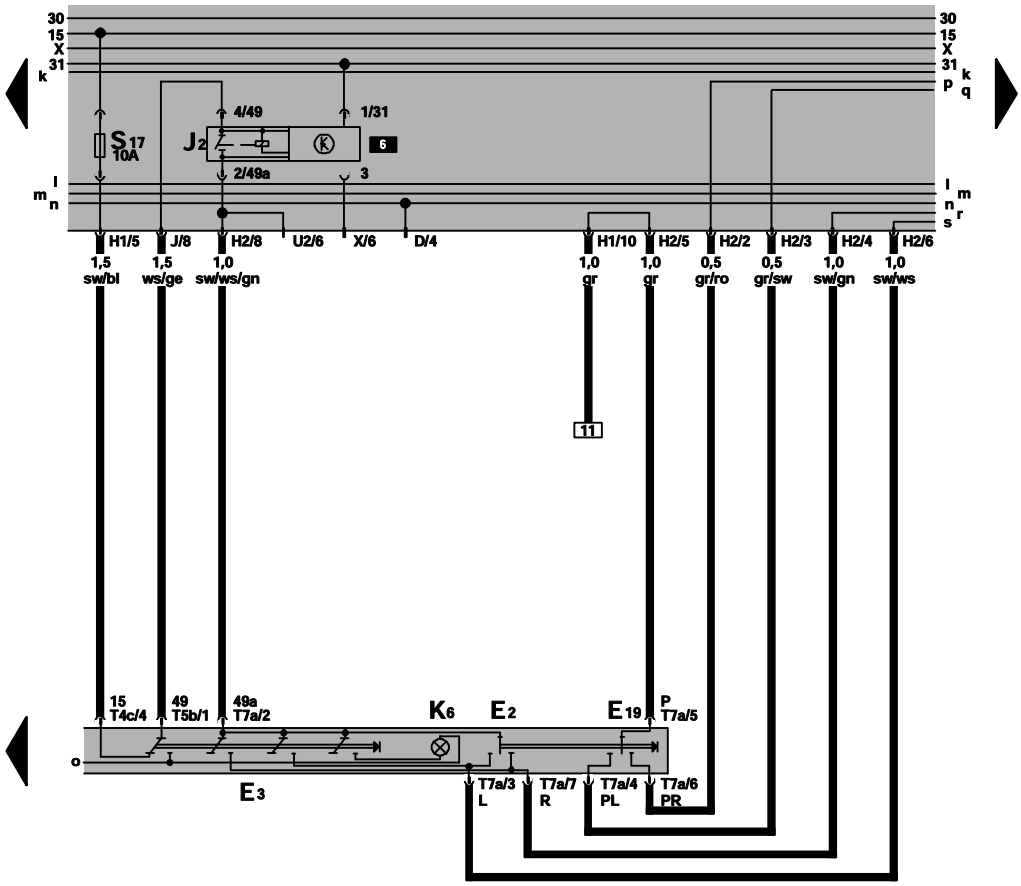

ws = white
sw = black
ro = red
br = brown
gn = green
bl = blue
gr = grey
li = violet
ge = yellow

127 128 129 130 131 132 133 134 135 136 137 138 139 140

97-11993

E2 - Turn Signal Switch
E3 - Emergency Flasher Switch
E19 - Park Light Switch
J2 - Emergency Flasher Relay
K6 - Emergency Flasher Warning Light
T4c - 4-Pin Connector, behind steering column switch cover
T5b - 5-Pin Connector, behind steering column switch cover
T7a - 7-Pin Connector, behind steering column switch cover

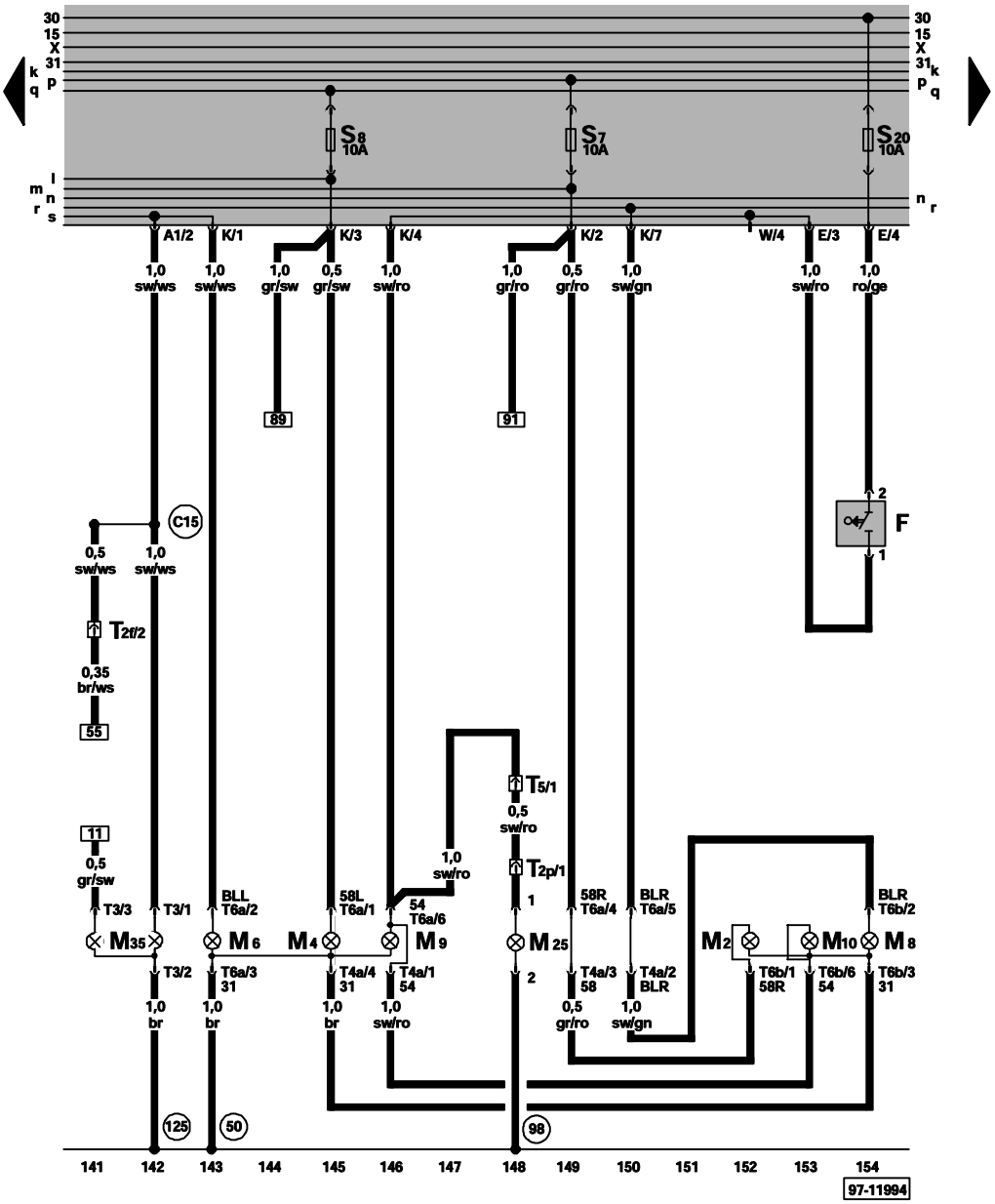

ws = white
sw = black
ro = red
br = brown
gn = green
bl = blue
gr = grey
li = violet
ge = yellow

F – Brake Light Switch
M2 – Right Tail Light
M4 – Left Tail Light
M6 – Left Rear Turn Signal Light
M8 – Right Rear Turn Signal Light
M9 – Left Brake Light
M10 – Right Brake Light
M25 – High–mount Brake Light
M35 – Left Front Turn Signal and Side Marker Light
T2p – Double Connector, in rear lid
T2f – Double Connector, behind fuse/relay panel
T3 – 3-Pin Connector
T4a – 4-Pin Connector, on tail light left
T5 – 5-Pin Connector, in luggage compartment, left
T6a – 6–Pin Connector, on tail light, left
T6b – 6–Pin Connector, on tail light, right
(50) – Ground connection, in luggage compart ment, left
(98) – Ground connection, in rear lid wiring harness
(125) – Ground connection –3–, in headlight wiring harness
(C15) – Wire connection –1–, in headlight wiring harness

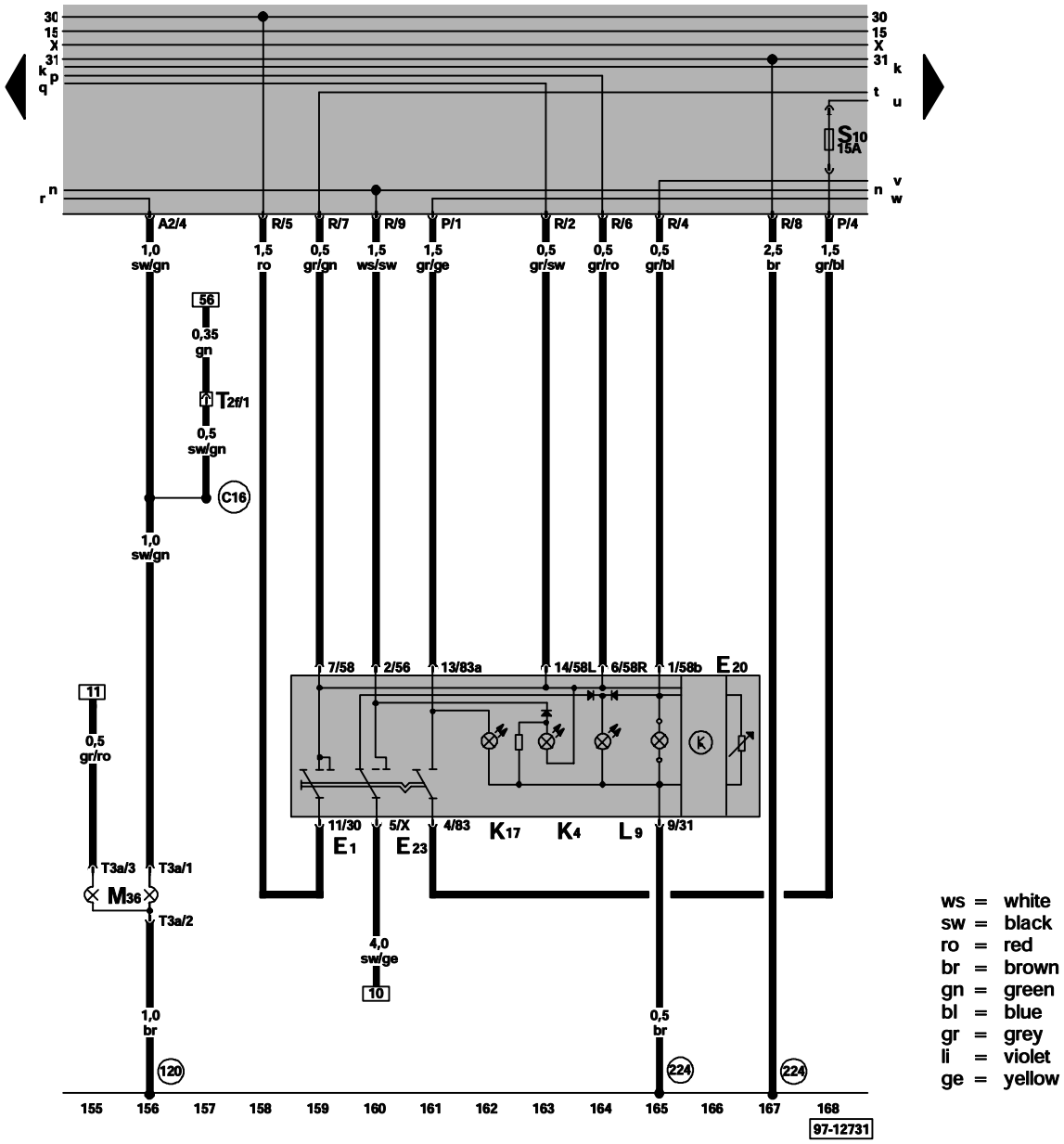

ws = white
sw = black
ro = red
br = brown
gn = green
bl = blue
gr = grey
li = violet
ge = yellow

E1 – Light Switch
E20 – Instrument Panel Light Dimmer Switch
E23 – Fog Light Switch
K4 – Park Light Indicator Light
K17 – Fog Light Indicator Light
L9 – Headlight Switch Light
M36 – Right Front Turn Signal Light and Side Marker Light
T2f – Double Connector, behind fuse/relay panel
T3a – 3-Pin Connector

(120) – Ground connection –2–, in headlight wiring harness

(224) – Ground connection, in light switch wiring harness

(C16) – Wire connection –2–, in headlight wiring harness

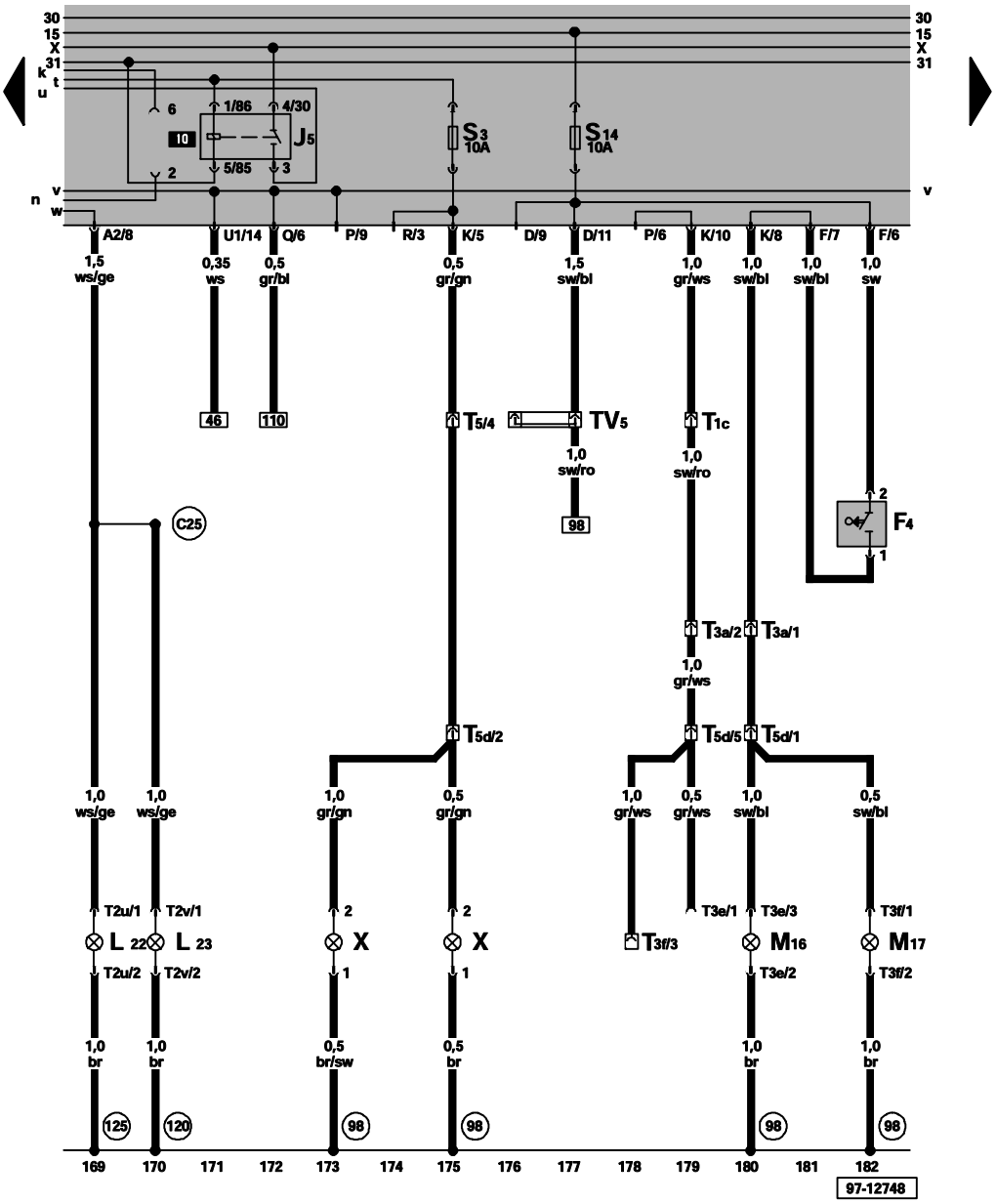

ws = white
sw = black
ro = red
br = brown
gn = green
bl = blue
gr = grey
li = violet
ge = yellow

F4 – Back-Up Light Switch
J5 – Fog Light Relay
L22 – Left Front Fog Light
L23 – Right Front Fog Light
M16 – Left Back-Up Light
M17 – Right Back-Up Light
T1c – Single Connector, in luggage compartment, left
T2u – Double Connector
T2v – Double Connector
T3a – 3-Pin Connector, in luggage compartment, left
T3e – 3-Pin Connector
T3f – 3-Pin Connector
T5 – 5-Pin Connector, in rear lid
T5d – 5-Pin Connector, in luggage compartment, left
X – License Plate Light
(87) – Ground connection –2–, in rear wiring harness
(120) – Ground connection –2–, in headlight wiring harness
(125) – Ground connection –3–, in headlight wiring harness
(C25) – Wire connection (fog lights), in front light wiring harness

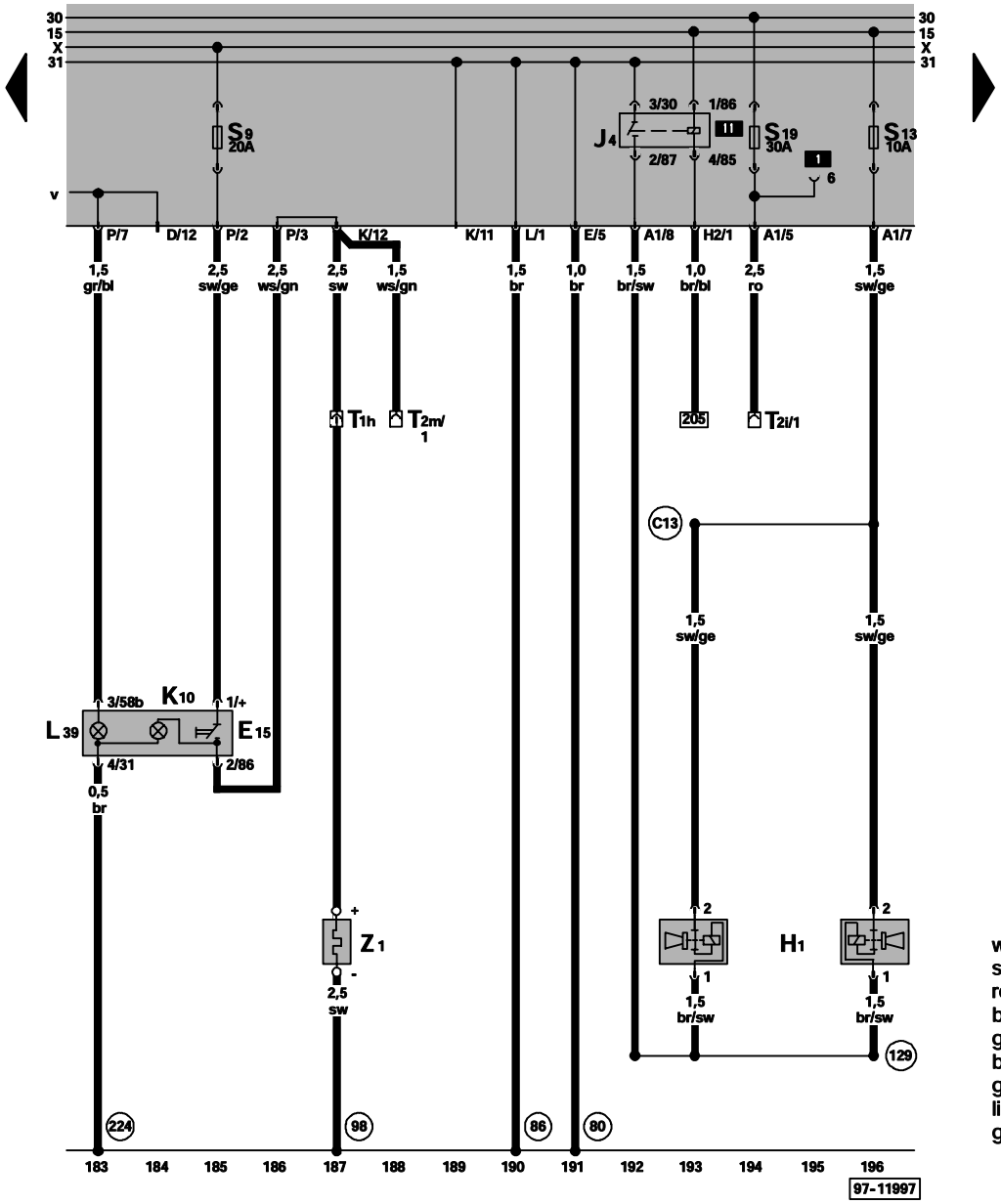

ws = white
sw = black
ro = red
br = brown
gn = green
bl = blue
gr = grey
li = violet
ge = yellow

E15 – Rear Window Defogger Switch
H1 – Dual Horns
J4 – Dual Horn Relay
K10 – Rear Window Defogger Indicator Light
L39 – Rear Window Defogger Switch Light
T1h – Single Connector, in luggage compartment, left
T2i – Double Connector, behind fuse/relay panel
T2m – Double Connector, behind fuse/relay panel
Z1 – Rear Window Defogger/Heat Element

(80) – Ground connection –1–, in instrument panel wiring harness

(86) – Ground connection –1–, in rear wiring harness

(98) – Ground connection, in rear lid wiring harness

(129) – Ground connection, in dual–tone horn wiring harness

(224) – Ground connection, in light switch wiring harness

(C13) – Plus connection, in dual tone horn wiring harness

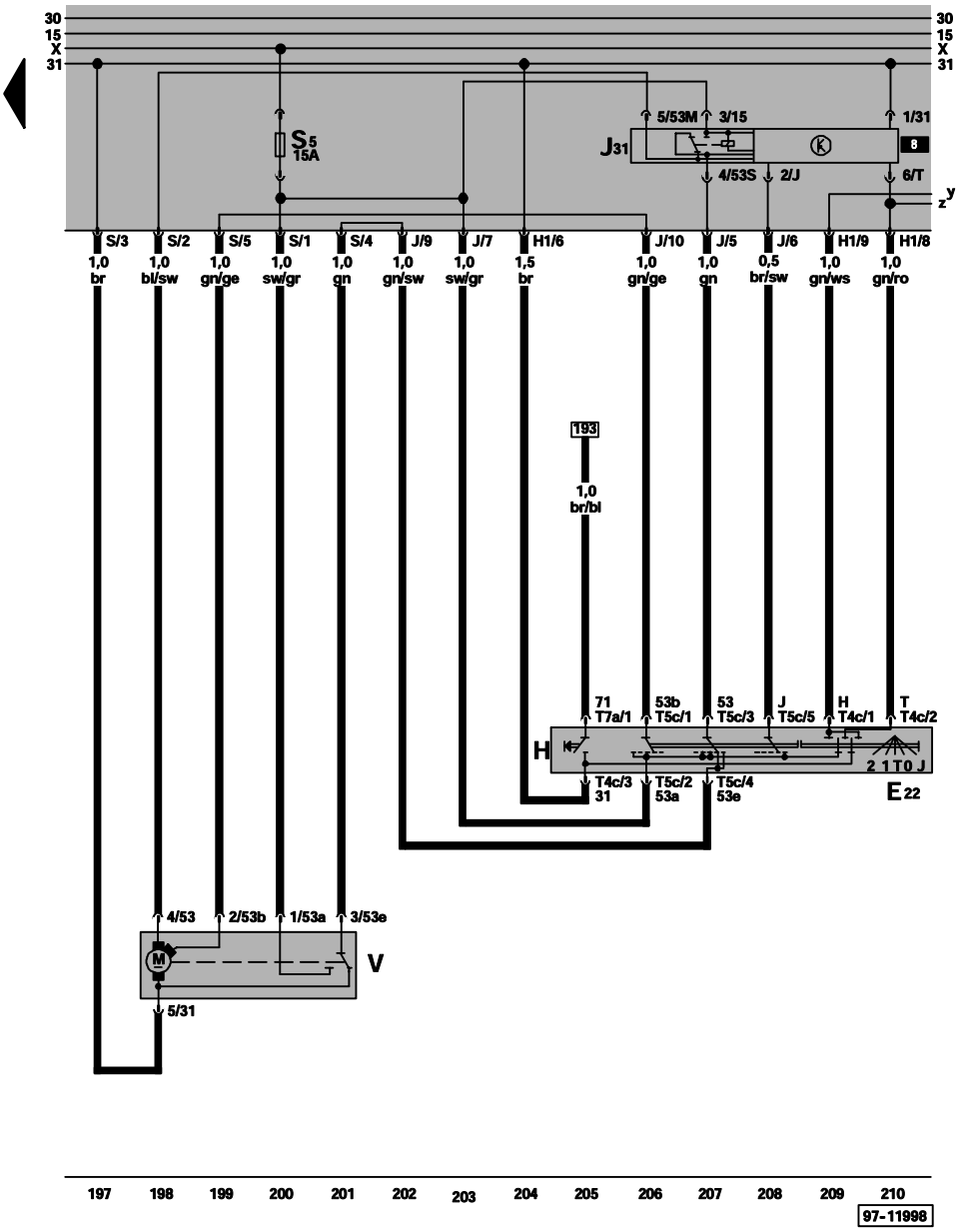

ws = white
sw = black
ro = red
br = brown
gn = green
bl = blue
gr = grey
li = violet
ge = yellow

E22 – Windshield Wiper/Washer Switch
H – Horn button
J31 – Wiper/Washer Intermittent Relay
T4c – 4-Pin Connector, behind steering column switch cover
T5c – 5-Pin Connector, behind steering column switch cover
T7a – 7-Pin Connector, behind steering column switch cover
V – Windshield Wiper Motor

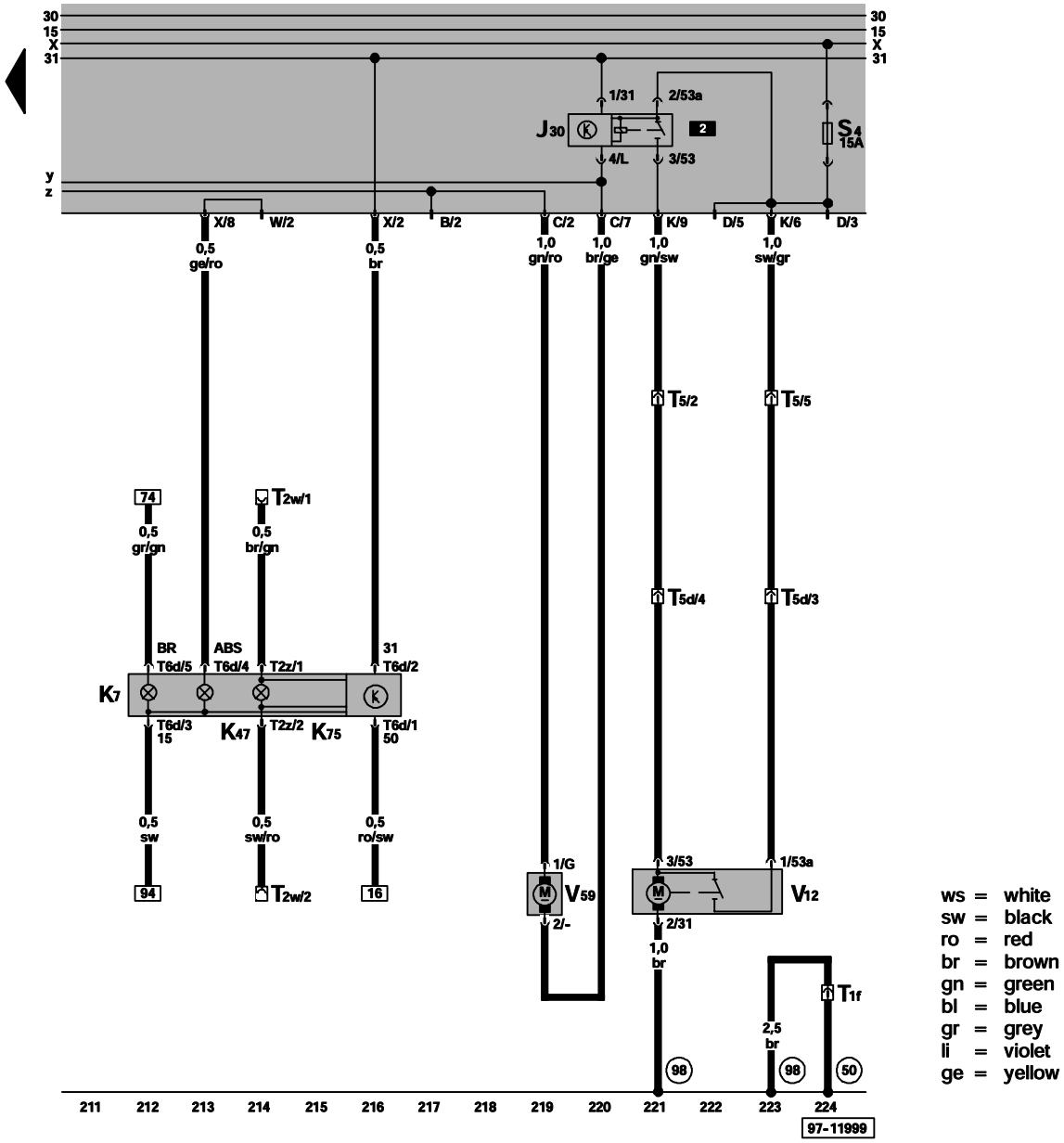

ws = white
sw = black
ro = red
br = brown
gn = green
bl = blue
gr = grey
li = violet
ge = yellow

J30 – Rear Window Wiper/Washer Relay
K7 – Brake and Parking Brake Warning Light
K47 – ABS Warning Light
K75 – Airbag Warning Light
T1f – Single Connector, in rear lid
T2w – Double Connector, behind fuse/relay panel
T2z – Double Connector
T5 – 5-Pin Connector, in luggage compartment, left
T5d – 5-Pin Connector, in rear lid
T6d – 6-Pin Connector
V12 – Rear Window Wiper Motor
V59 – Windshield and Rear Window Washer Pump

(50) – Ground connection, in luggage compartment, left

(98) – Ground connection, in rear lid wiring harness

2.8L-Engine – Motronic Mutiport Fuel In ection (MFI)/128kW, code AAA,

from August 1994

Relay location
For relay location and multiple connectors see also section "component locations".

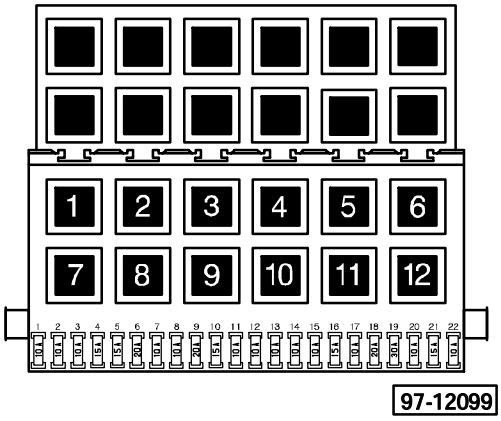

3 – Motronic Engine Control Module (ECM) Power Supply Relay (109)

12 – Fuel Pump (FP) Relay (167)

Note: Number in parentheses indicates production control number stamped on relay housing.

Fuse colors

30A – green
25A – white
20A – yellow
15A – blue
10A – red

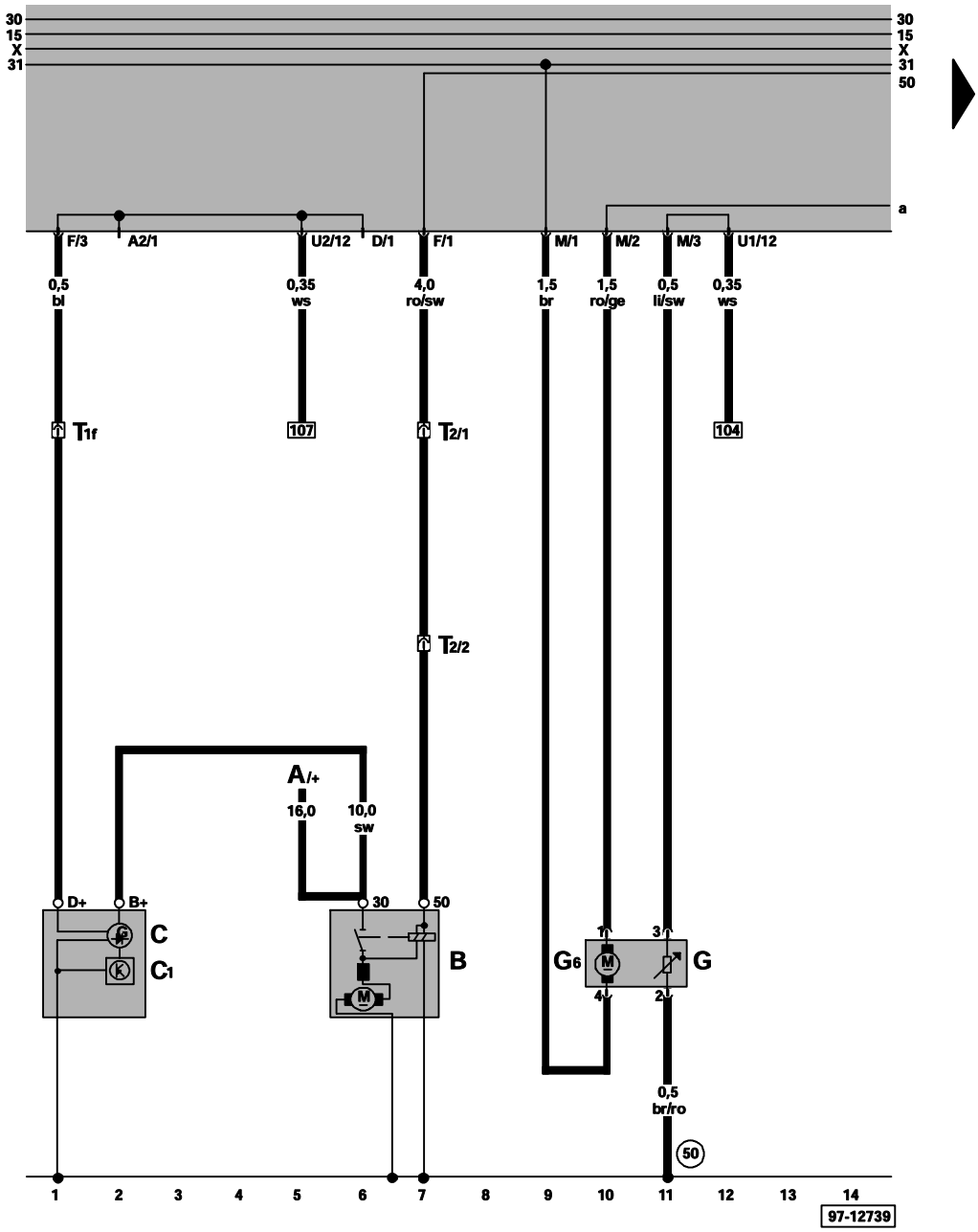

ws = white
sw = black
ro = red
br = brown
gn = green
bl = blue
gr = grey
li = violet
ge = yellow

A – Battery
B – Starter
C – Generator (GEN)
C1 – Voltage Regulator (VR)
G – Fuel Level Sensor
G6 – Fuel Pump (FP)
T1f – Single Connector, near starter
T2 – Double Connector, behind fuse/relay panel

(50) – Ground connection, in luggage compartment, left

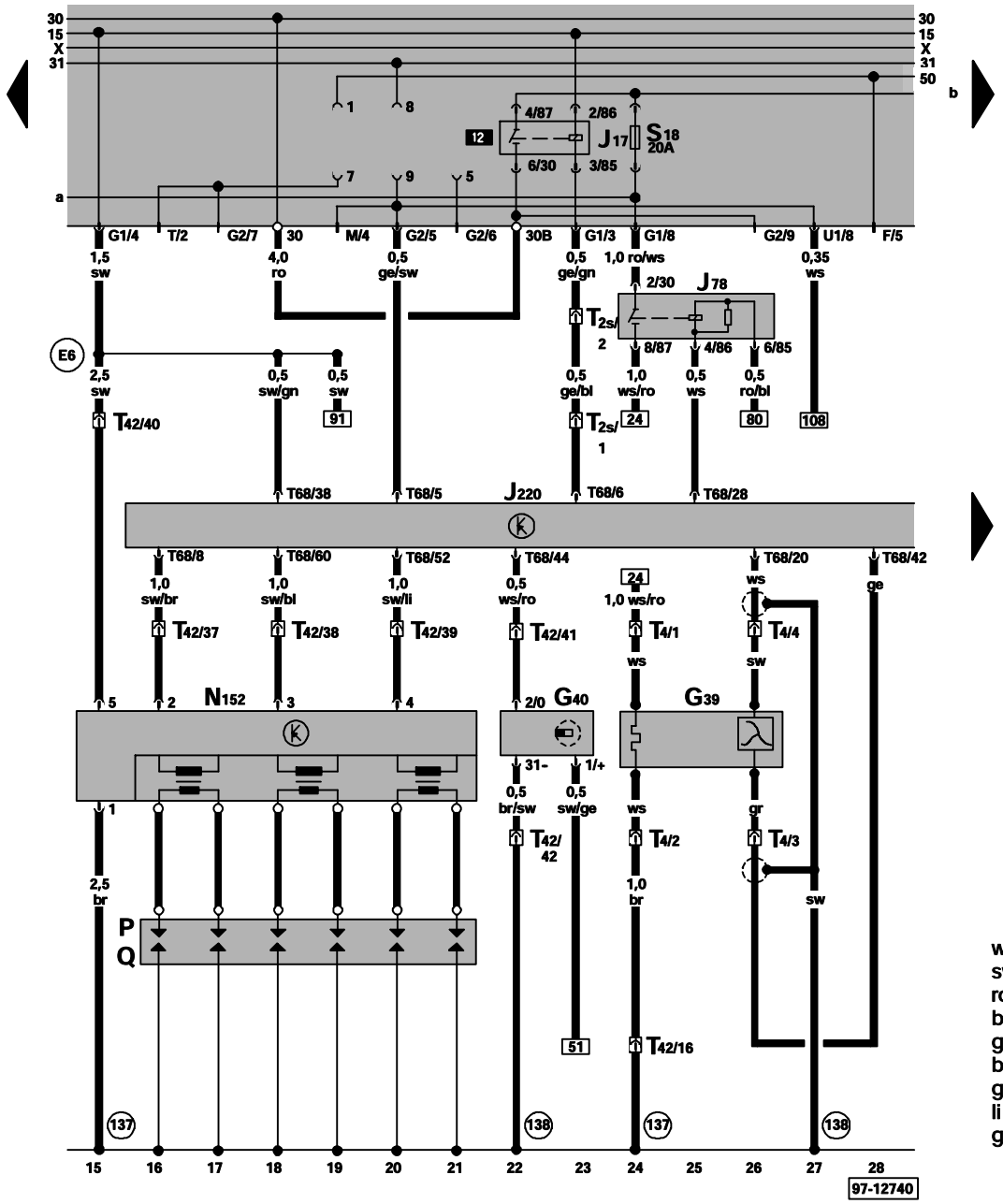

ws = white
sw = black
ro = red
br = brown
gn = green
bl = blue
gr = grey
li = violet
ge = yellow

- G39 - Heated Oxygen Sensor (HO2S) (00525)
- G40 - Camshaft Position (CMP) Sensor (00515)
- J17 - Fuel Pump (FP) Relay (01259)
- J220 - Motronic Engine Control Module (ECM), in plenum chamber, right
- J278 - Heated Oxygen Sensor (HO2S) Relay (00640), on auxiliary relay panel, below instrument panel, left
- N152 - Ignition Coil
- P - Spark Plug Connectors
- Q - Spark Plugs
- T2s - Double Connector, behind fuse/relay panel
- T4 - 4-Pin Connector, near exhaust pipe
- T42 - 42-Pin Connector, on left cylinder head
- T68 - 68-Pin Connector, on Motronic Engine Control Module (ECM)

(137) - Ground connection (end stage), in Motronic Multiport Fuel Injection (MFI) wiring harness

(138) - Ground connection (control module), in Motronic Multiport Fuel Injection (MFI) wiring harness

(E6) - Plus connection -1- (15), in Motronic Multiport Fuel Injection (MFI) wiring harness

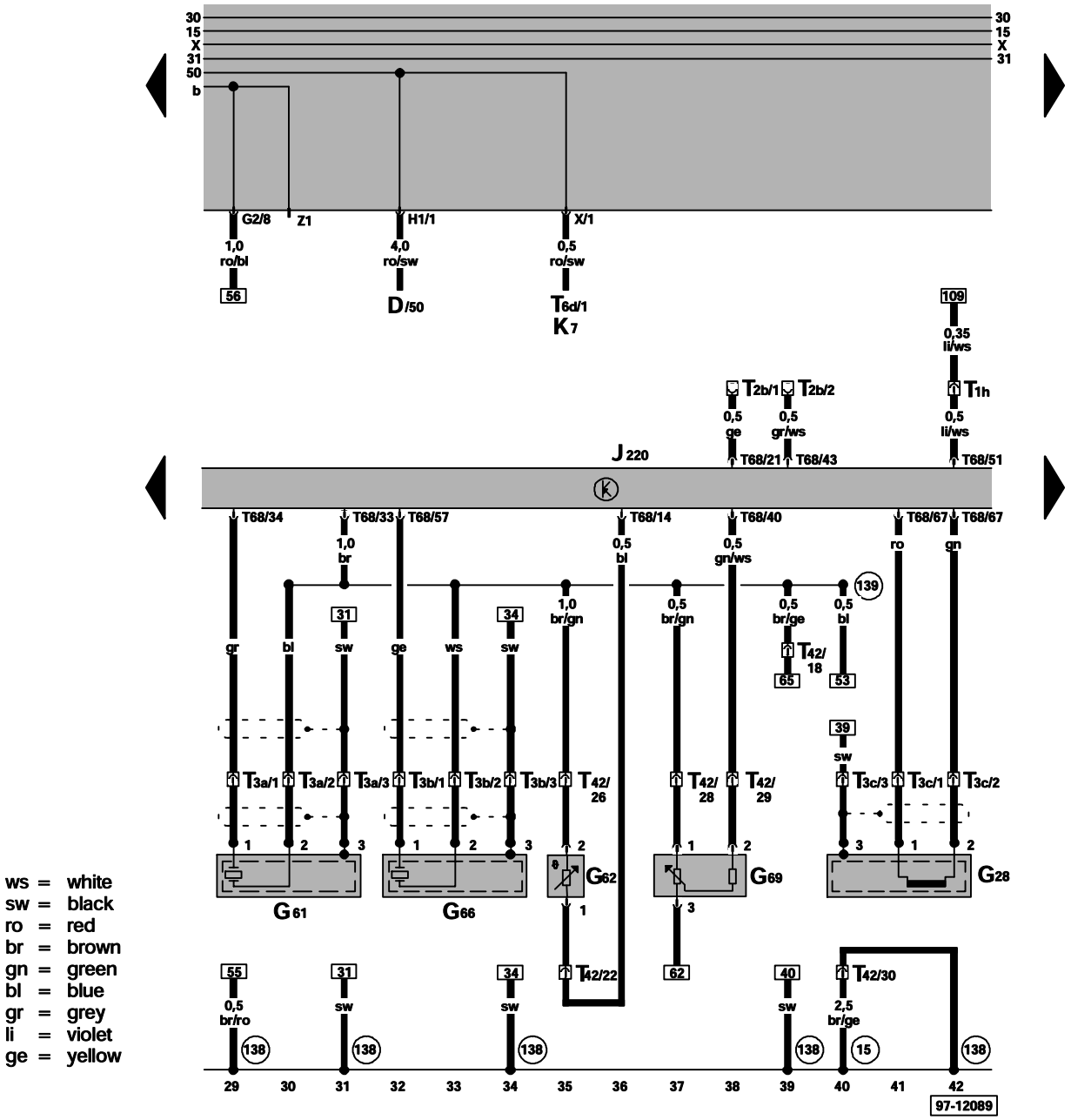

ws = white
sw = black
ro = red
br = brown
gn = green
bl = blue
gr = grey
li = violet
ge = yellow

D – Ignition/Starter Switch
G28 – Engine Speed (RPM) Sensor (00513)
G61 – Knock Sensor (KS) 1 (00524)
G62 – Engine Coolant Temperature (ECT) Sensor (00522)
G66 – Knock Sensor (KS) II (00540)
G69 – Throttle Position (TP) Sensor (00518)
J220 – Motronic Engine Control Module (ECM), in plenum chamber, right
K7 – Brake and Parking Brake Warning Light (01047)
T1h – Single Connector, behind fuse/relay panel, consumption signal for multi-function display
T2b – Double Connector, behind console, on Data Link Connector (DLC) Wire Connector
T3a – 3-Pin Connector, near starter
T3b – 3-Pin Connector, near exhaust pipe
T3c – 3-Pin Connector, near starter
T6d – 6-Pin Connector
T42 – 42-Pin Connector, on left cylinder head
T68 – 68-Pin Connector, on Motronic Engine Control Module (ECM)

(15) – Ground connection, on cylinder head

(138) – Ground connection (control module), in Motronic Multiport Fuel Injection (MFI) wiring harness

(139) – Ground connection (sensor Ground), in Motronic Multiport Fuel Injection (MFI) wiring harness

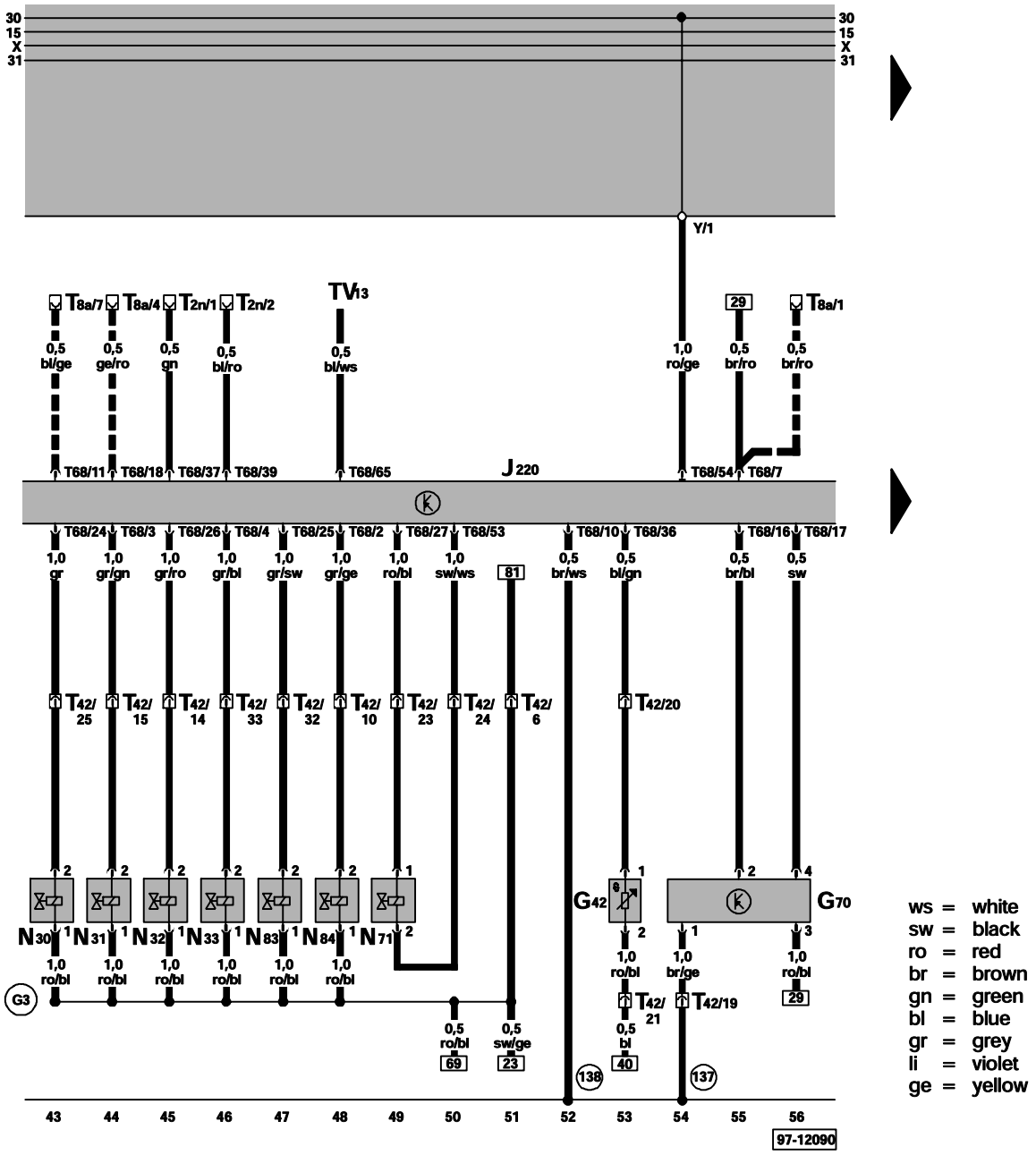

ws = white
sw = black
ro = red
br = brown
gn = green
bl = blue
gr = grey
li = violet
ge = yellow

- G42 – Intake Air Temperature (IAT) Sensor (00523)
- G70 – Mass Air Flow (MAF) Sensor (00553)
- J220 – Motronic Engine Control Module (ECM), in plenum chamber, right
- N30 – Cylinder 1 Fuel Injector (01249)
- N31 – Cylinder 2 Fuel Injector (01250)
- N32 – Cylinder 3 Fuel Injector (01251)
- N33 – Cylinder 4 Fuel Injector (01252)
- N71 – Idle Air Control (IAC) Valve (01257)
- N83 – Cylinder 5 Fuel Injector (01253)
- N84 – Cylinder 6 Fuel Injector (01254)
- T2n – Double Connector, behind fuse/relay panel, air conditioning connection
- T2n – Double Connector, behind fuse/relay panel, air conditioning connection
- T8a – 8-Pin Connector, behind fuse/relay panel
- T42 – 42-Pin Connector, on left cylinder head
- T68 – 68-Pin Connector, on Motronic Engine Control Module (ECM)
- TV13 – Vehicle Speed Signal Wire Connector, above fuse/relay panel
- (137) – Ground connection (end stage), in Motronic Multiport Fuel Injection (MFI) wiring harness
- (138) – Ground connection (control module), in Mo tronic Multiport Fuel Injection (MFI) wiring harness
- (G3) – Plus connection, in injector wiring harness
- ▬▬ – Automatic transmission only

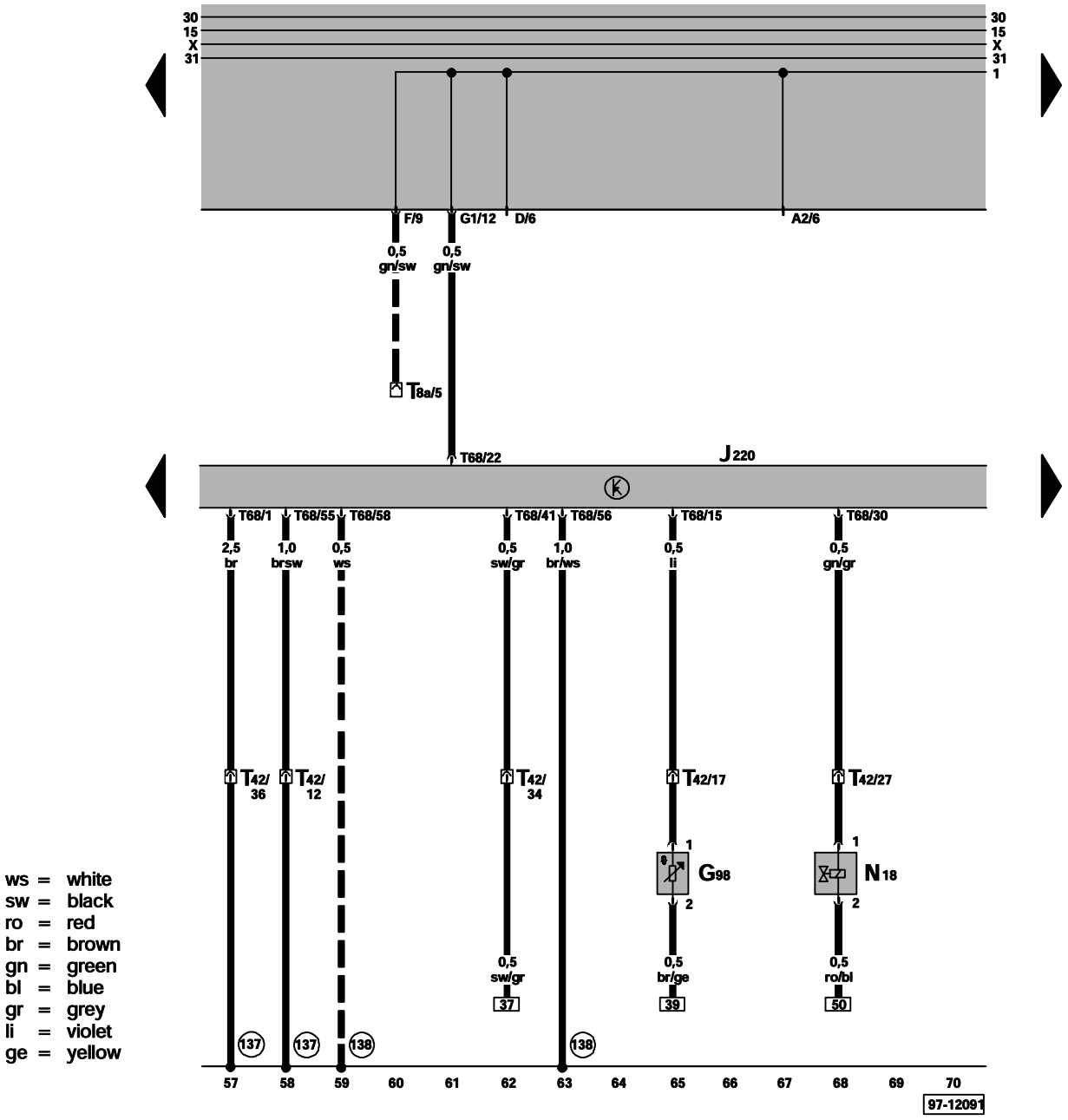

ws = white
sw = black
ro = red
br = brown
gn = green
bl = blue
gr = grey
li = violet
ge = yellow

G98 – EGR Temperature Sensor (00585)
J220 – Motronic Engine Control Module (ECM)
N18 – EGR Vacuum Regulator Solenoid Valve (01265)
T8 – 8-Pin Connector, behind fuse/relay panel
T42 – 42-Pin Connector, on left cylinder head
T68 – 68-Pin Connector, on Motronic Engine Control Module (ECM)

(137) – Ground connection (end stage), in Motronic Multiport Fuel Injection (MFI) wiring harness

(138) – Ground connection (control module), in Motronic Multiport Fuel Injection (MFI) wiring harness

▬▬ – Automatic transmission only

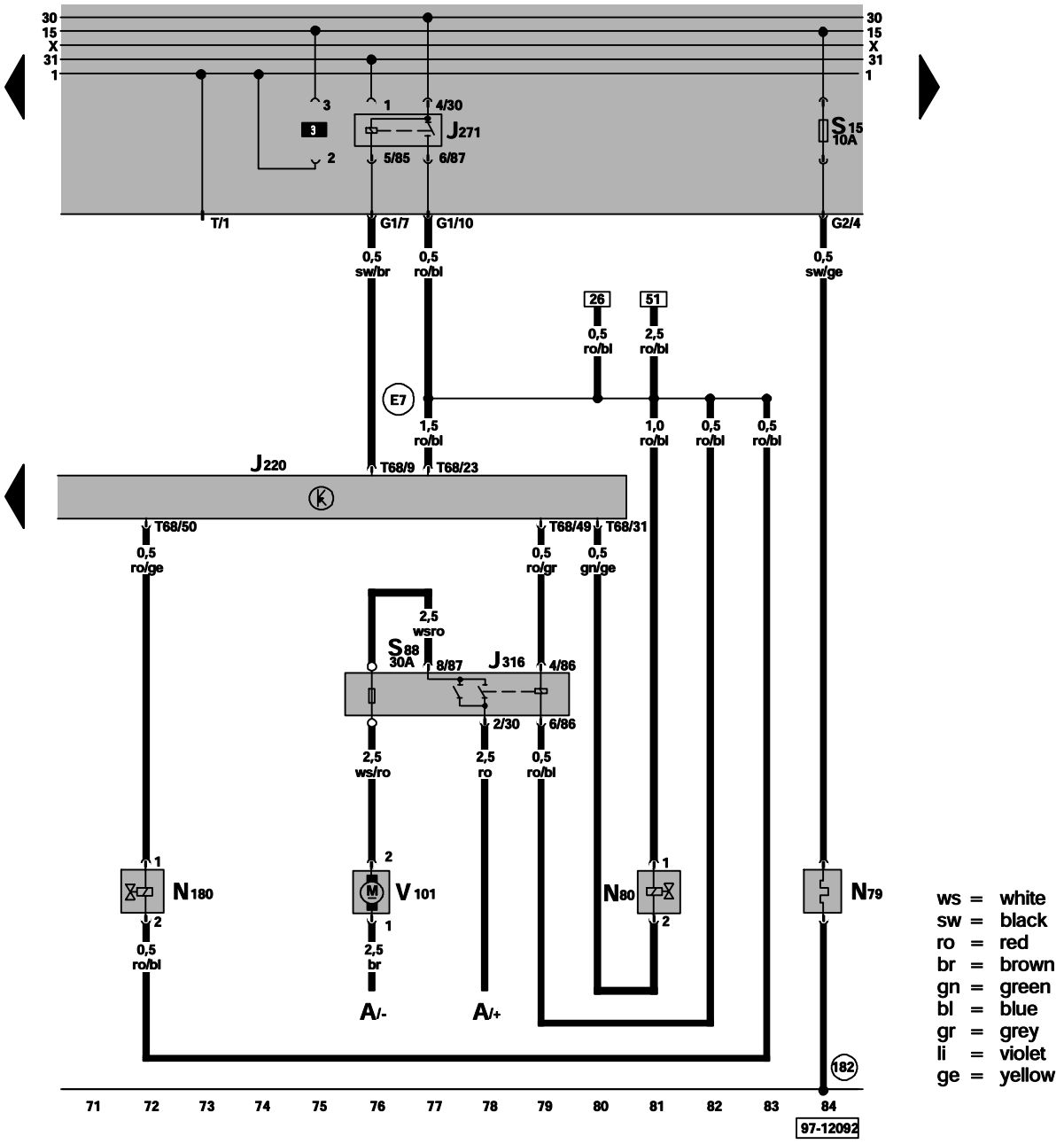

ws = white
sw = black
ro = red
br = brown
gn = green
bl = blue
gr = grey
li = violet
ge = yellow

A – Battery
J220 – Motronic Engine Control Module (ECM), in plenum chamber, right
J271 – Motronic Engine Control Module (ECM) Power Supply Relay
J316 – Secondary Air Injection (AIR) Relay, on firewall, center
N79 – Positive Crankcase Ventilation (PCV) Heating Element
N80 – Evaporative Emission (EVAP) Canister Purge Regulator Valve (01247)
N180 – Change Over Valve
S88 – Fuse Strip for Secondary Air Injection (AIR) Pump Motor
T68 – 68-Pin Connector, on Motronic Engine Control Module (ECM)
V101 – Secondary Air Injection (AIR) Pump Motor

182 – Ground connection –1–, in engine compartment wiring harness (6 Cylinder)

E7 – Plus connection (87a), in Multiport Fuel Injection (MFI) wiring harness

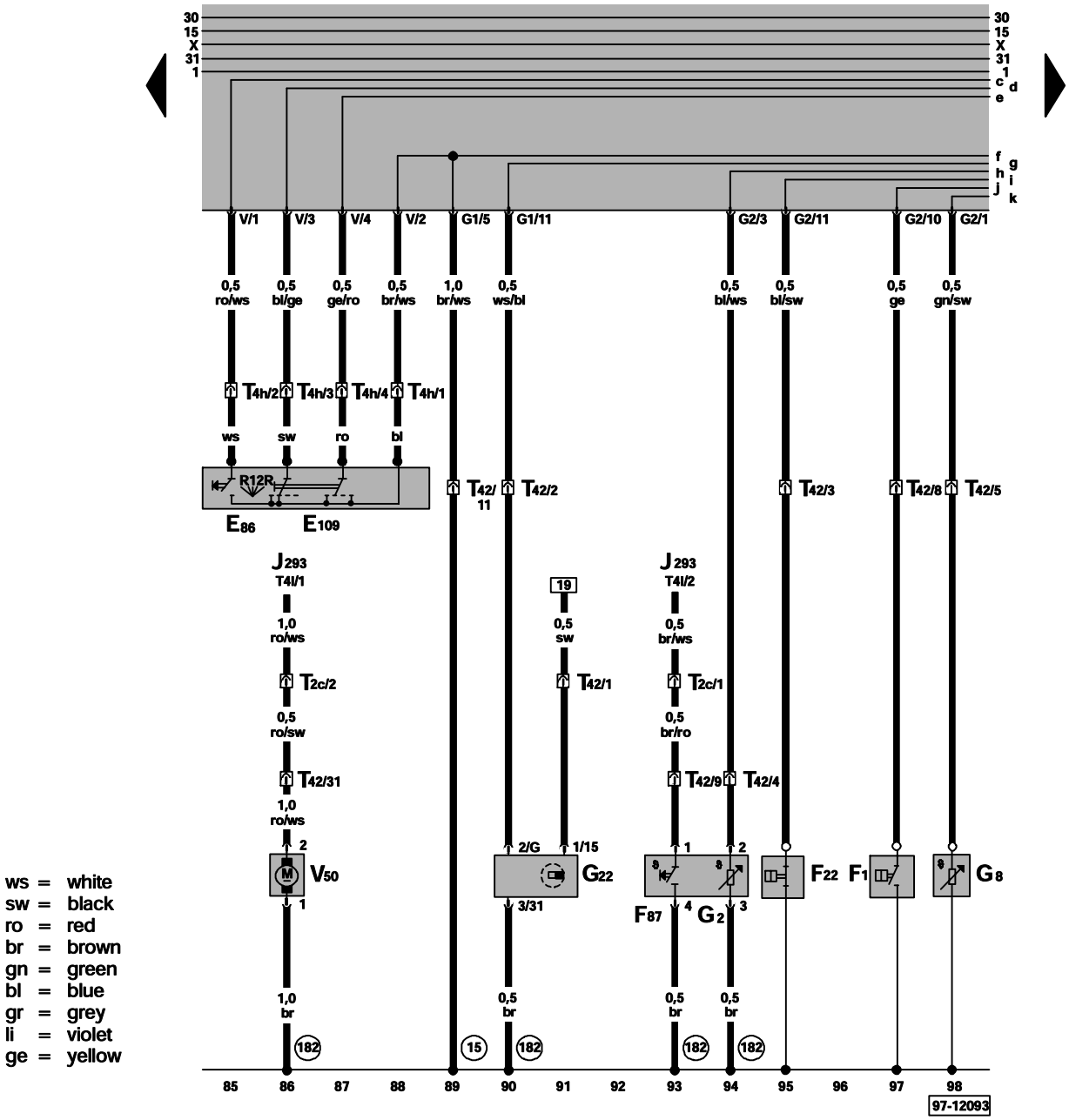

ws = white
sw = black
ro = red
br = brown
gn = green
bl = blue
gr = grey
li = violet
ge = yellow

E86 – Multi-Function Indicator Mode Select Switch
E109 – Multi-Function Indicator Memory Switch
F1 – Oil Pressure Switch
F22 – 0.3 Bar Oil Pressure Switch
F87 – After-Run Coolant Fan Control (FC) Thermal Switch
G2 – Engine Coolant Temperature (ECT) Sensor
G8 – Engine Oil Temperature Sensor
G22 – Speedometer Vehicle Speed Sensor (VSS) (01086)(hall generator, on transmission)
J293 – Coolant FC (Fan Control) Control Module, in engine compartment, left
T2c – Double Connector, behind fuse/relay panel
T4h – 4-Pin Connector, behind steering column switch cover
T4l – 4-Pin Connector, on Coolant FC (Fan Control) Control Module
T42 – 42-Pin Connector, on left cylinder head
V50 – Coolant Pump

(15) – Ground connection, on cylinder head

(182) – Ground connection –1–, in engine compartment wiring harness (6 Cylinder)

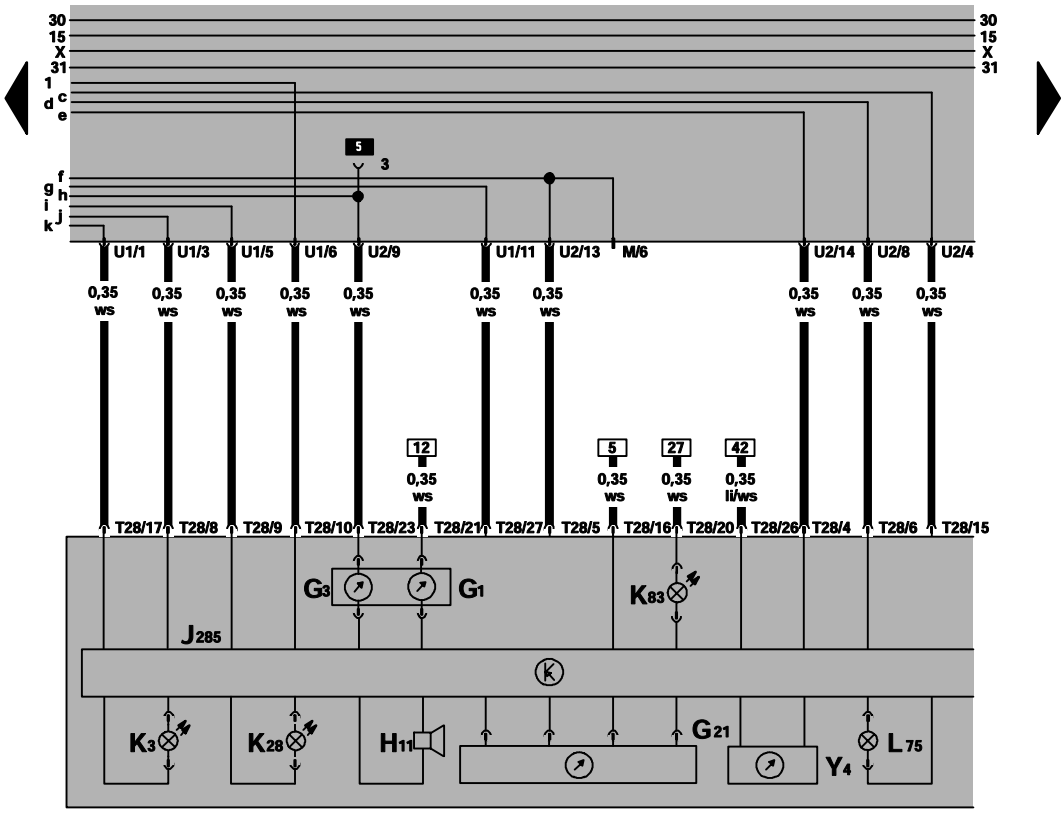

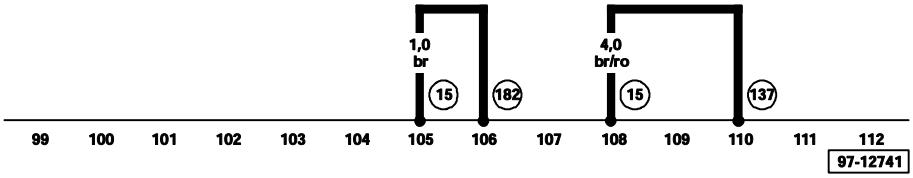

ws = white
sw = black
ro = red
br = brown
gn = green
bl = blue
gr = grey
li = violet
ge = yellow

G1 – Fuel Gauge
G3 – Engine Coolant Temperature (ECT) Gauge
G21 – Speedometer
H11 – Oil Pressure Warning Buzzer
J285 – Control Module With Display Unit In Instrument Cluster
K3 – Oil Pressure Warning Light
K28 – Engine Coolant Level/Temperature (ECL/ECT) Warning Light
K83 – Malfunction Indicator Lamp (MIL)
L75 – Digital Display Light
T28 – 28-Pin Connector, on instrument cluster
Y4 – Odometer Display

(15) – Ground connection, on cylinder head

(137) – Ground connection (end stage), in Motronic Multiport Fuel Injection (MFI) wiring harness

(182) – Ground connection –1–, in engine compartment wiring harness (6 Cylinder)

Coolant fan, two speeds, 250W,code AAA,

from August 1994

Relay location
For relay location and multiple connectors see also section "component locations".

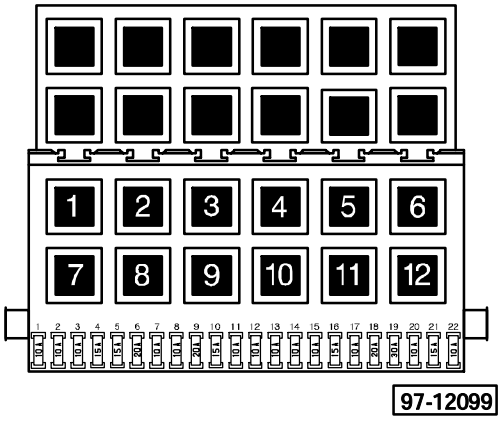

Fuse colors

30A – green
25A – white
20A – yellow
15A – blue
10A – red

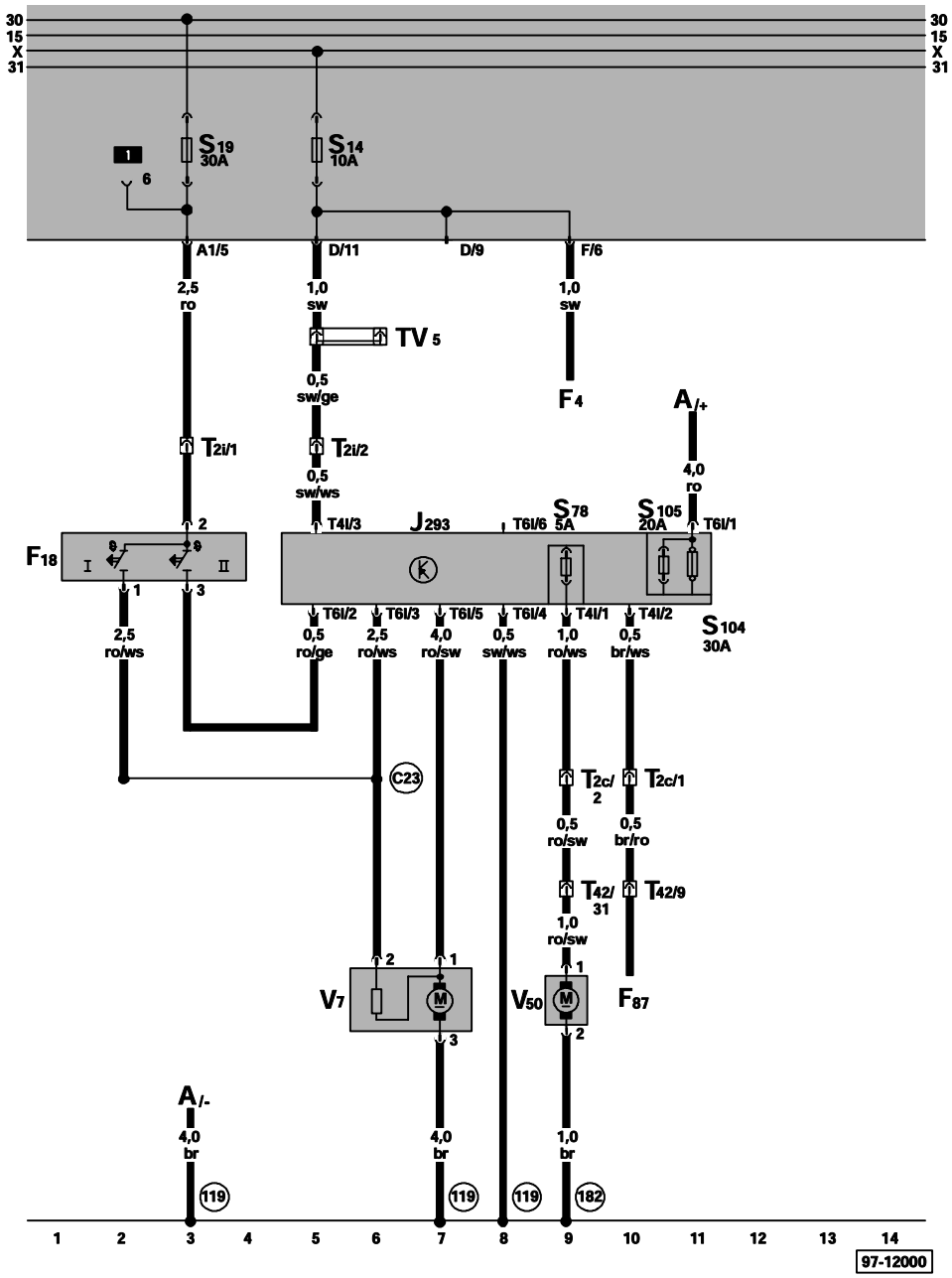

ws = white
sw = black
ro = red
br = brown
gn = green
bl = blue
gr = grey
li = violet
ge = yellow

A – Battery
F4 – Back-Up Light Switch
F18 – Coolant Fan Control (FC) Thermal Switch
F87 – After-Run Coolant Fan Control (FC) Thermal Switch
J293 – Coolant FC (Fan Control) Control Module, in engine compartment, left
S78 – Engine Coolant Pump Fuse
S104 – Second Speed Coolant Fan Fuse
S105 – First Speed Coolant Fan fuse
T2c – Double Connector, behind fuse/relay panel
T2i – Double Connector, behind fuse/relay panel
T4i – 4-Pin Connector, on Coolant FC (Fan Control) Control Module
T6i – 6-Pin Connector, on Coolant FC (Fan Control) Control Module
T42 – 42-Pin Connector, on left cylinder head
TV5 – Terminal 15a Wire Connector, above fuse/relay panel
V7 – Coolant Fan
V50 – Coolant Pump

119 – Ground connection –1–, in cooling fan wiring harness

182 – Ground connection –1–, in engine compartment wiring harness (6 Cylinder)

C23 – Wire connection (blower, 1st speed), in cooling fan wiring harness

Coolant fan, two speeds, 250W,code AA ,

from August 1994

Relay location
For relay location and multiple connectors see also section "component locations".

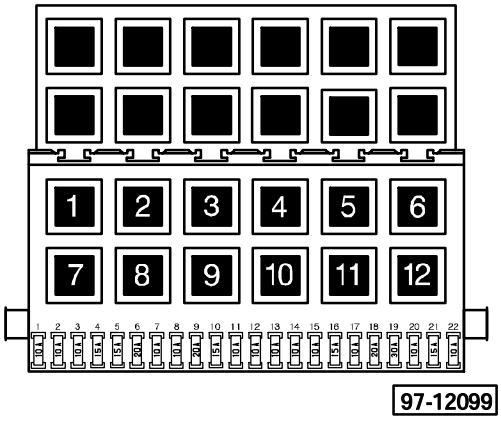

Fuse colors

30A – green
25A – white
20A – yellow
15A – blue
10A – red

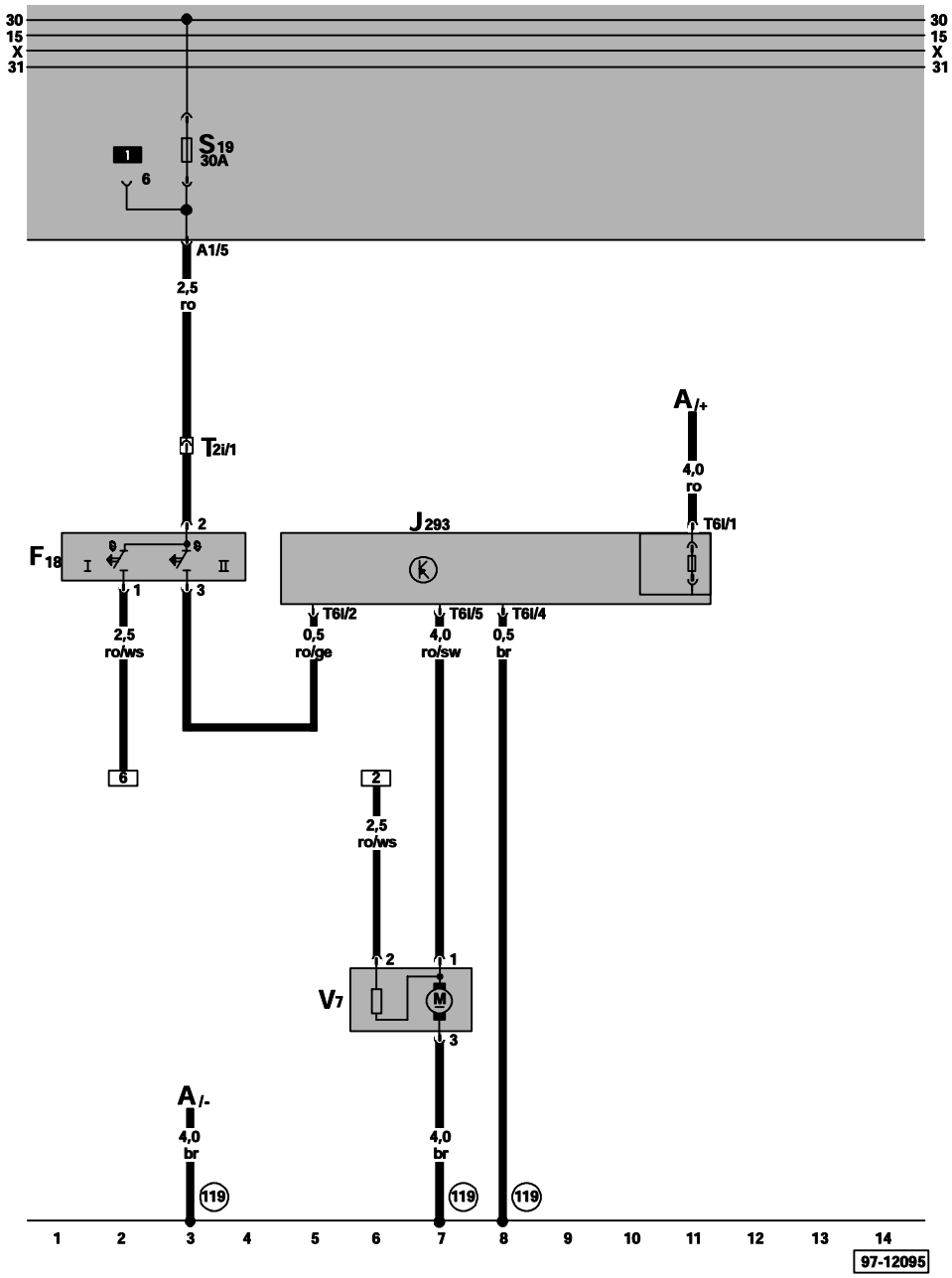

ws = white
sw = black
ro = red
br = brown
gn = green
bl = blue
gr = grey
li = violet
ge = yellow

A – Battery
F18 – Coolant Fan Control (FC) Thermal Switch
J293 – Coolant FC (Fan Control) Control Module, in engine compartment,left
S104 – Second Speed Coolant Fan Fuse
T2i – Double Connector, behind fuse7relay panel
T6l – 6-Pin Connector, on Coolant FC (Fan Control) Control Module
V7 – Coolant Fan

(119) – Ground connection –1–, in cooling fan wiring harness

Air conditioning,
D 1.9l-Engine – Turbo Diesel Fuel In ection (DFI)/55 kW, code AA ,

from August 1994

Relay location
For relay location and multiple connectors see also section "component locations".

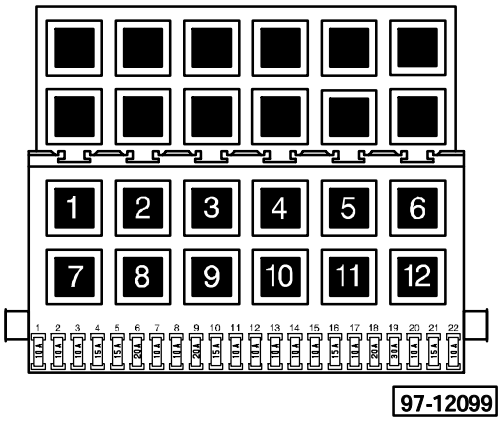

Fuse colors

30A – green
25A – white
20A – yellow
15A – blue
10A – red

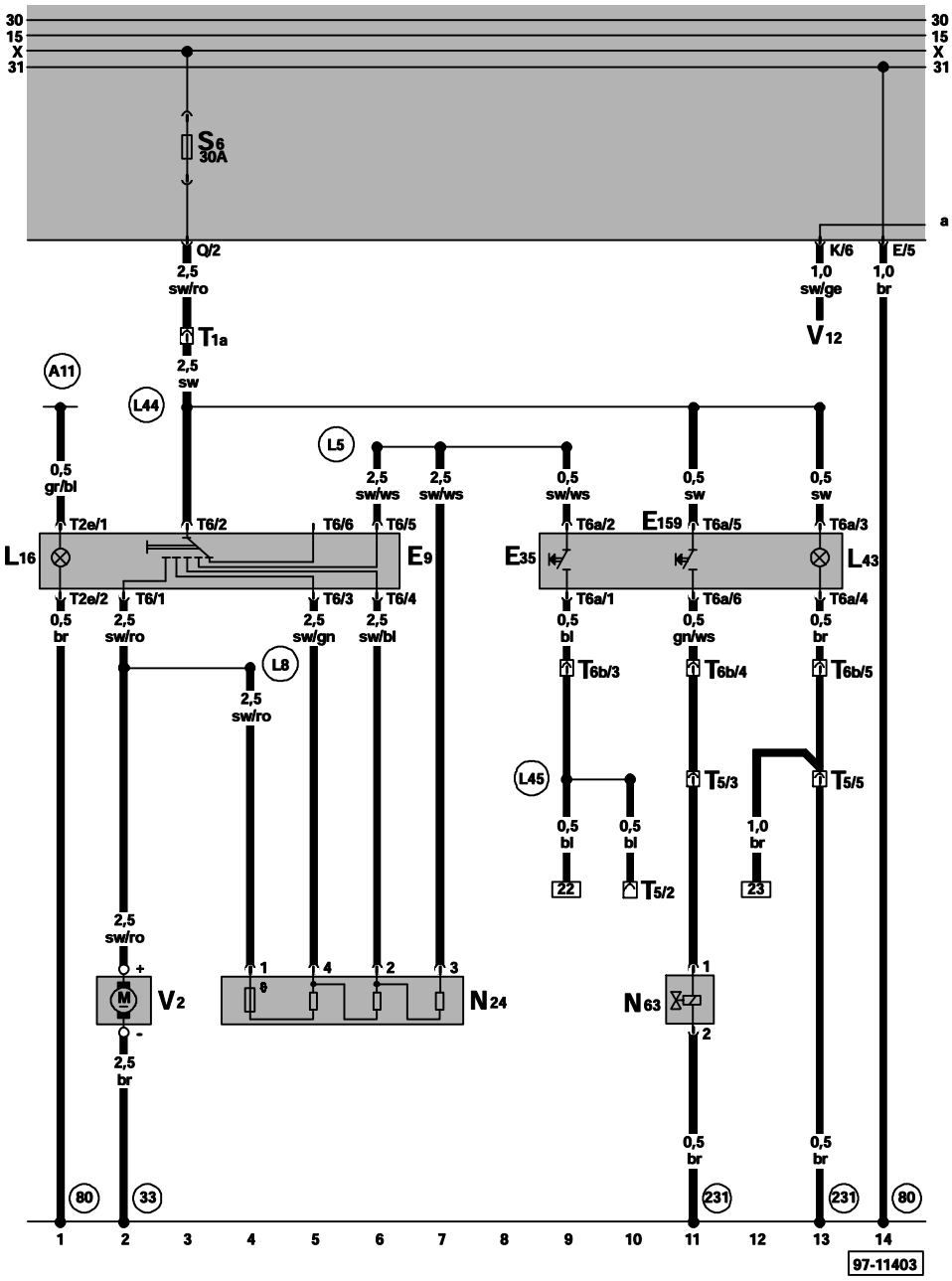

ws = white
sw = black
ro = red
br = brown
gn = green
bl = blue
gr = grey
li = violet
ge = yellow

E9 – Fresh Air Blower Switch
E35 – A/C Switch
E159 – Fresh Air/Recirculating Flap Switch
L16 – Fresh Air Control Lever Light
L43 – A/C Switch Illumination Light
N24 – Fresh Air Blower Series Resistance With Fuse
N63 – Fresh Air/Recirculating Flap Two-Way Valve (00605)
T1a – Single Connector, behind fuse/relay panel
T2e – Double Connector
T5 – 5-Pin Connector, behind fuse/relay panel
T6 – 6-Pin Connector
T6a – 6-Pin Connector
T6b – 6-Pin Connector, behind instrument panel, center
V2 – Fresh Air Blower
V12 – Rear Window Wiper Motor
33 – Ground connection, behind instrument panel, right
80 – Ground connection –1–, in instrument panel wiring harness
231 – Ground connection, in A/C system–coolant fan wiring harness
A11 – Plus connection (58b) in instrument panel wiring harness
L5 – Wire connection –1–, in evaporator housing wiring harness
L8 – Wire connection –4–, in evaporator housing wiring harness
L44 – Wire connection (X), in A/C system wiring harness
L45 – Wire connection, in A/C system wiring harness

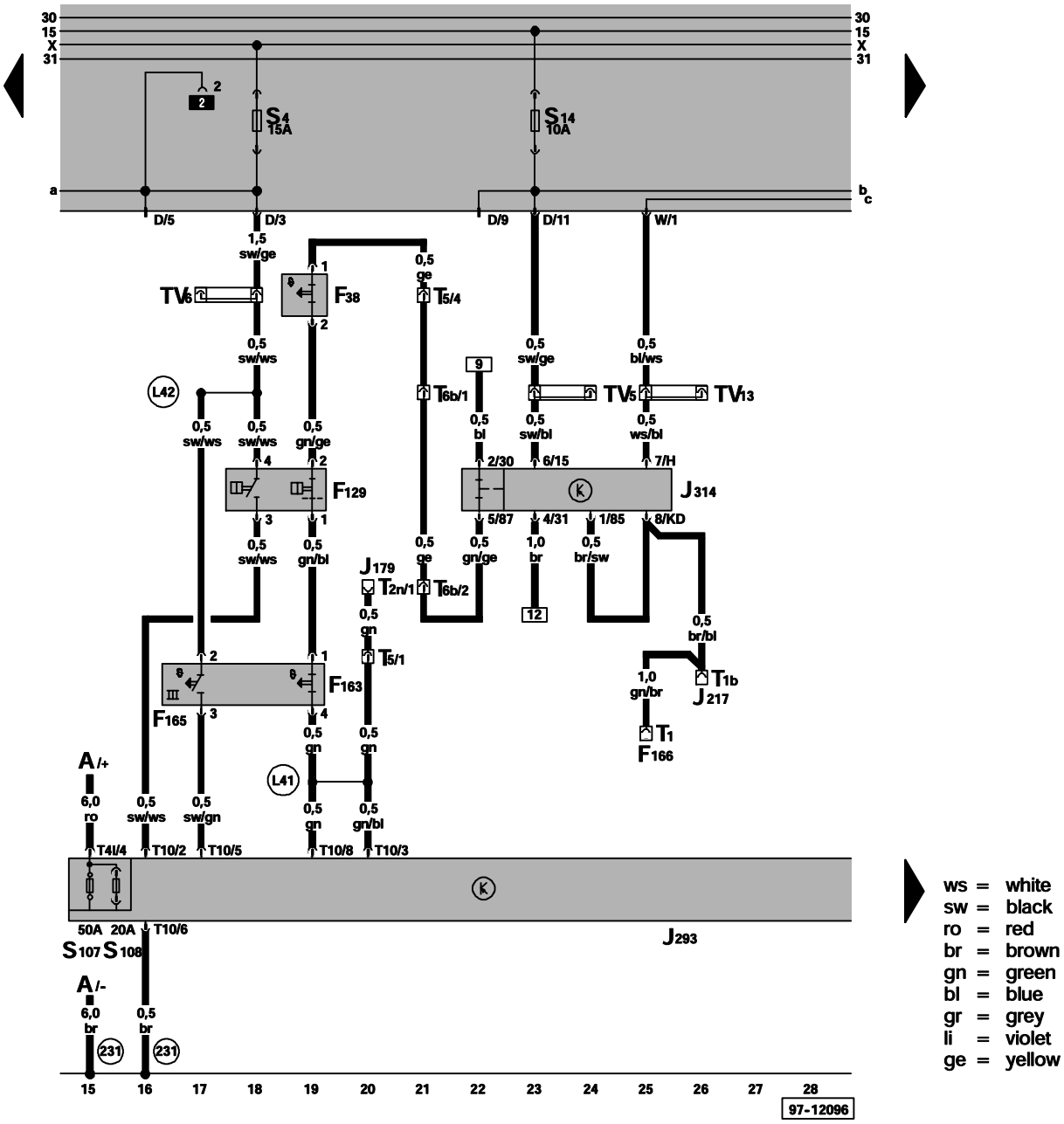

ws = white
sw = black
ro = red
br = brown
gn = green
bl = blue
gr = grey
li = violet
ge = yellow

A – Battery
F38 – Ambient Temperature Switch, in plenum chamber, right
F129 – A/C Pressure Switch
F163 – A/C Cut-Out Thermal Switch
F165 – Third Speed Coolant Fan Control (FC) Thermal Switch
F166 – EGR Part Throttle Switch
J179 – Automatic Glow Time Control Module
J217 – Transmission Control Module (TCM)
J293 – Coolant Fan Control (FC) Control Module
J314 – A/C Cut-Off Control Module, behind console, vehicles with automatic transmission:
J246 – A/C Clutch Cut-Off Relay
S107 – Coolant Fan Second and Third Speed Fuse
S108 – Coolant Fan First Speed and A/C Clutch Fuse
T1 – Single Connector, behind fuse/relay panel
T1b – Single Connector, behind fuse/relay panel
T2n – Double Connector, behind fuse/relay panel
T5 – 5–Pin Connector, behind fuse/relay panel
T6b – 6–Pin Connector, behind instrument panel, center
TV5 – Terminal 15a Wire Connector
TV6 – Terminal X Wire Connector
TV13 – Vehicle Speed Signal Wire Connector
V12 – Rear Window Wiper Motor
V50 – Coolant Pump

231 – Ground connection, in A/C system–coolant fan wiring harness

L41 – Wire connection (A/C on), in A/C system–coolant fan wiring harness

L42 – Wire connection (X), in A/C system–coolant fan wiring harness

A/C pressure switch, ambient temperature switch, coolant fan control (FC) control module, A/C cut-off

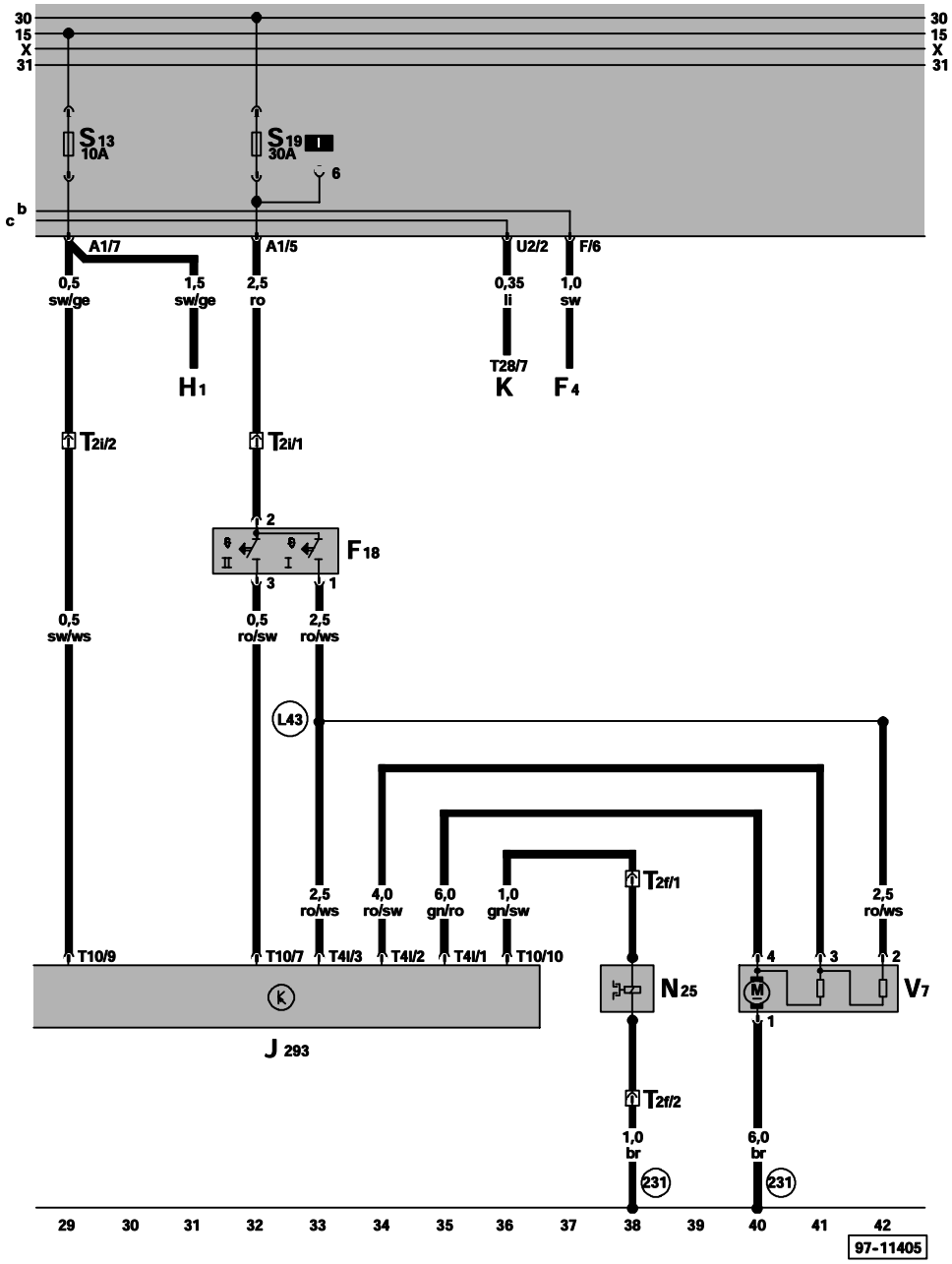

ws = white
sw = black
ro = red
br = brown
gn = green
bl = blue
gr = grey
li = violet
ge = yellow

F4 – Back-Up Light Switch
F18 – Coolant Fan Control (FC) Thermal Switch
H1 – Dual Horns
J293 – Coolant Fan Control (FC) Control Module, in engine compartment, left
K – Instrument Cluster
N25 – A/C Clutch
T2f – Double Connector, near compressor
T2i – Double Connector, behind fuse/relay panel
T4l – 4-Pin Connector, on Coolant Fan Control (FC) Control Module
T10 – 10-Pin Connector, on Coolant Fan Control (FC) Control Module
T28 – 28-Pin Connector, on instrument cluster
V7 – Coolant Fan

(231) – Ground connection, in A/C system-coolant fan wiring harness

(L43) – Wire connection (coolant fan), in A/C system-coolant fan wiring harness

Air conditioning,
D 2.8l-Engine – Motronic Multiport Fuel In ection (MFI)/ 128 kW, code AAA,

from August 1994

Relay location
For relay location and multiple connectors see also section "component locations".

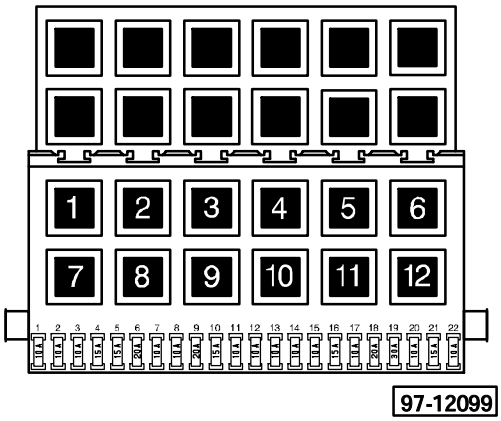

Fuse colors

30A – green
25A – white
20A – yellow
15A – blue
10A – red

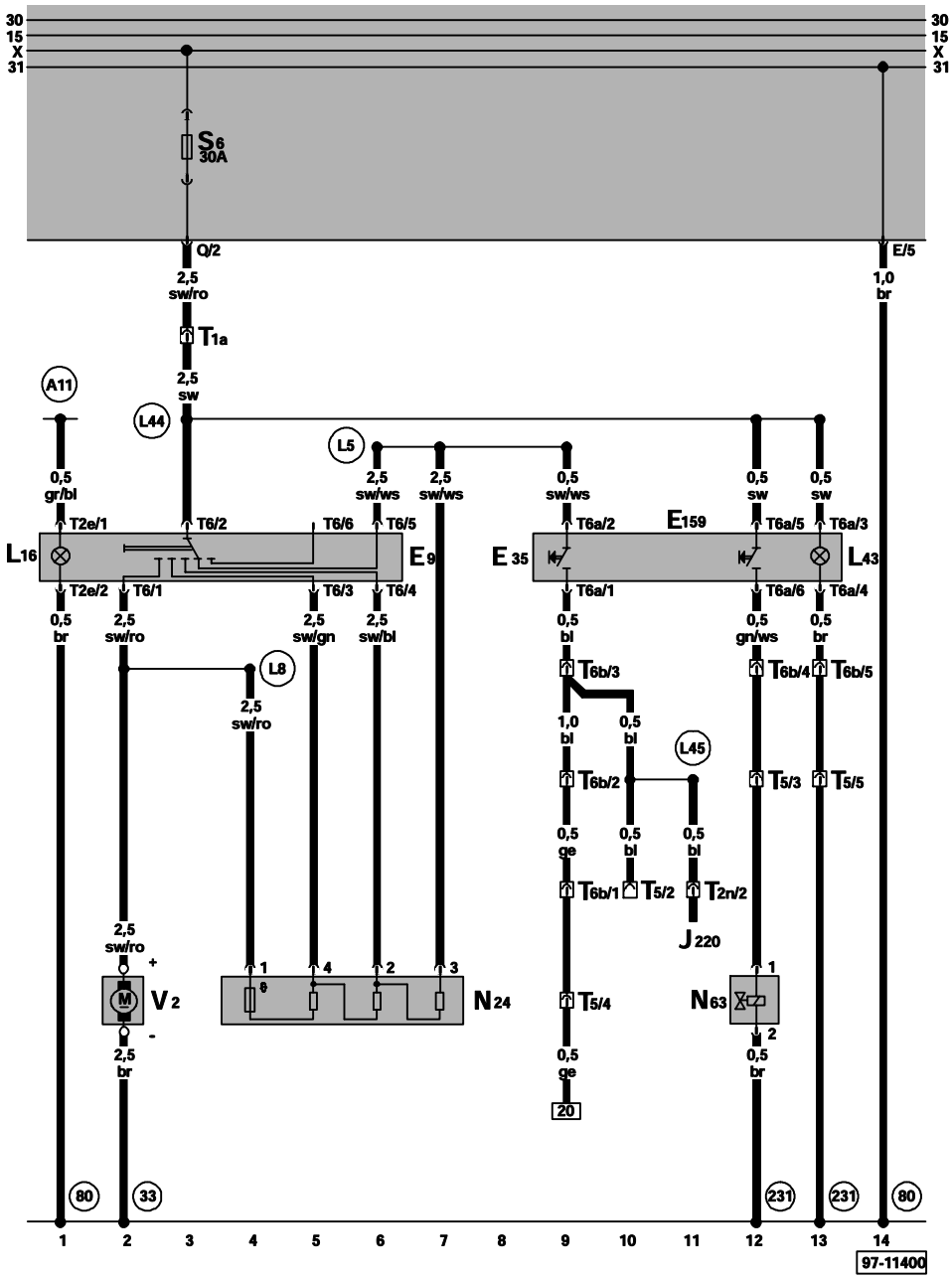

ws = white
sw = black
ro = red
br = brown
gn = green
bl = blue
gr = grey
li = violet
ge = yellow

E9 – Fresh Air Blower Switch
E35 – A/C Switch
E159 – Fresh Air/Recirculating Flap Switch
L16 – Fresh Air Control Lever Light
L43 – A/C Switch Illumination Light
N24 – Fresh Air Blower Series Resistance With Fuse
N63 – Fresh Air/Recirculating Flap Two-Way Valve
T1a – Single Connector, behind fuse/relay panel
T2e – Double Connector
T5 – 5-Pin Connector, behind fuse/relay panel
T6 – 6-Pin Connector
T6a – 6-Pin Connector
T6b – 6-Pin Connector, behind instrument panel, center
V2 – Fresh Air Blower

33 – Ground connection, behind instrument panel, right

80 – Ground connection –1–, in instrument panel wiring harness

231 – Ground connection, in A/C system–coolant fan wiring harness

A11 – Plus connection (58b) in instrument panel wiring harness

L5 – Wire connection –1–, in evaporator housing wiring harness

L8 – Wire connection –4–, in evaporator housing wiring harness

L44 – Wire connection (X), in A/C system wiring harness

L45 – Wire connection, in A/C system wiring harness

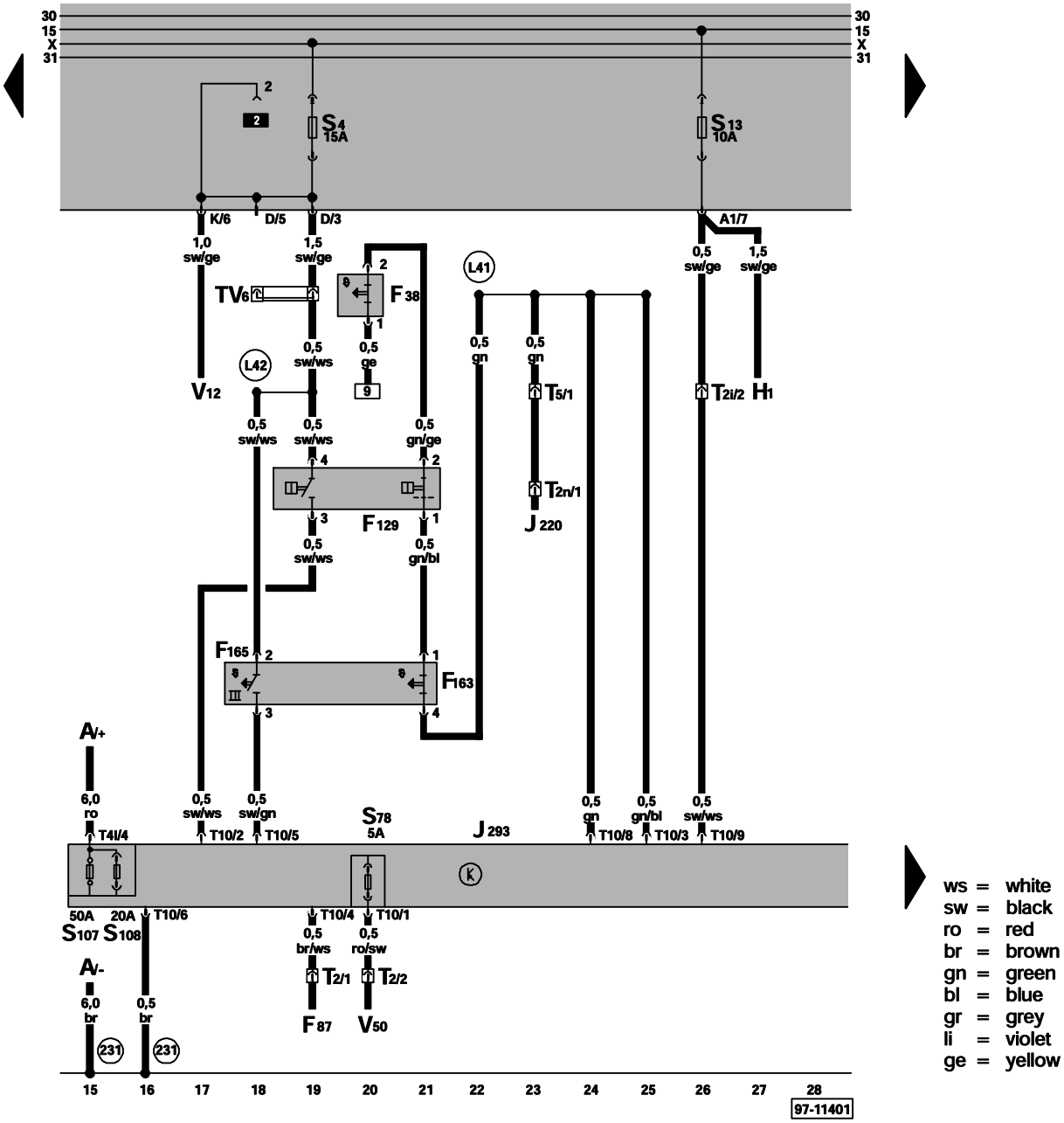

ws = white
sw = black
ro = red
br = brown
gn = green
bl = blue
gr = grey
li = violet
ge = yellow

A – Battery
F38 – Ambient Temperature Switch, in plenum chamber, right
F129 – A/C Pressure Switch
F163 – A/C Cut-Out Thermal Switch
F165 – Third Speed Coolant Fan Control (FC) Thermal Switch
H1 – Dual Horns
J220 – Motronic Engine Control Module (ECM)
J293 – Coolant Fan Control (FC) Control Module, in engine compartment, left
S107 – Coolant Fan Second and Third Speed Fuse
S108 – Coolant Fan First Speed and A/C Clutch Fuse
T2 – Double Connector, behind fuse/relay panel
T2n – Double Connector, behind fuse/relay panel
T4l – 4-Pin Connector, on Coolant Fan Control (FC) Control Module
T5 – 5-Pin Connector, behind fuse/relay panel
T10 – 10-Pin connector, on Coolant Fan Control (FC) Control Module
TV6 – Terminal X Wire Connector
V12 – Rear Window Wiper Motor
V50 – Coolant Pump

(231) – Ground connection, in A/C system–coolant fan wiring harness
(L41) – Wire connection (A/C on), in A/C system-coolant fan wiring harness
(L42) – Wire connection (X), in A/C system-coolant fan wiring harness

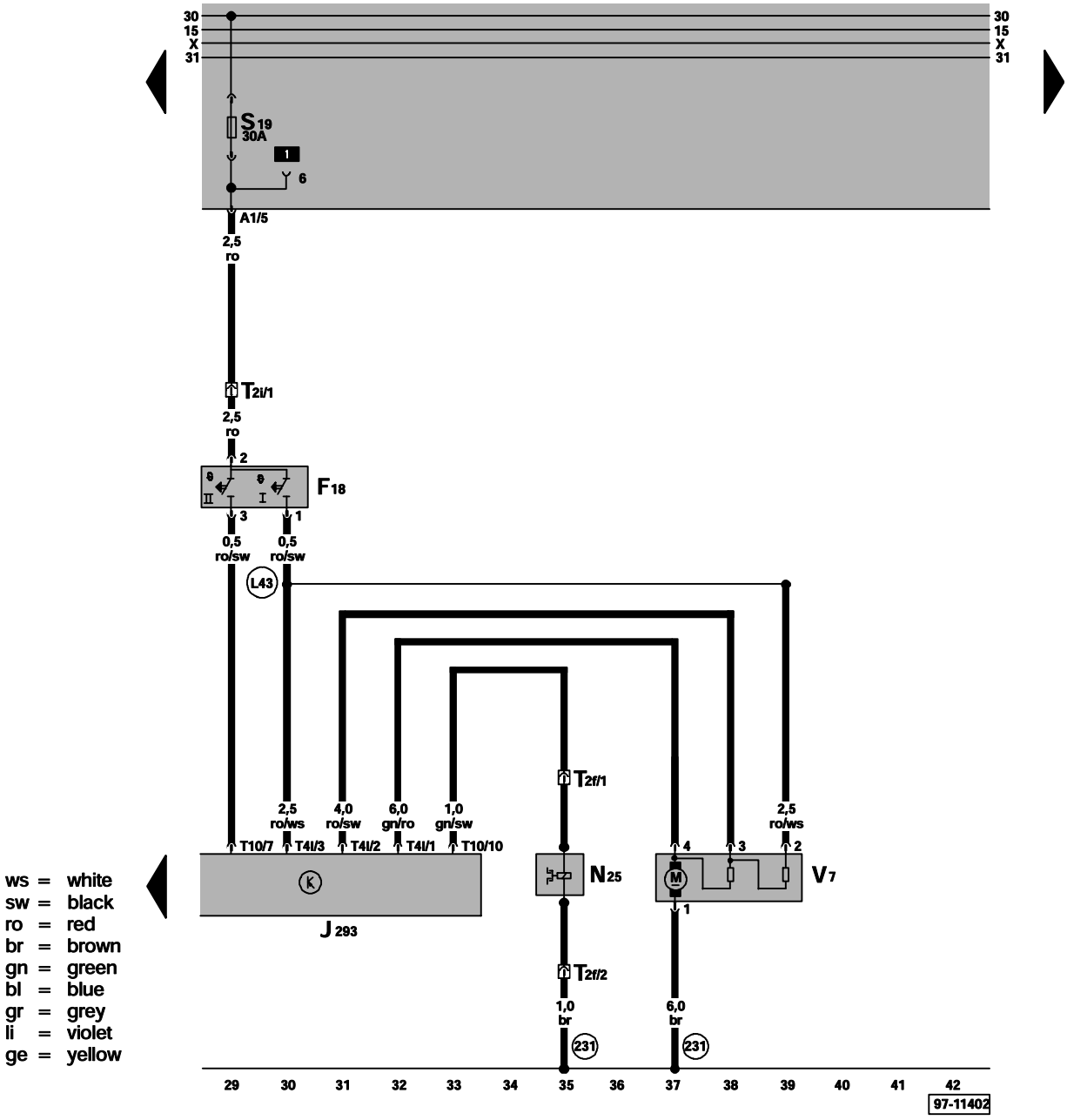

ws = white
sw = black
ro = red
br = brown
gn = green
bl = blue
gr = grey
li = violet
ge = yellow

F18 – Coolant Fan Control (FC) Thermal Switch
J293 – Coolant Fan Control (FC) Control Module, in engine compartment, left
N25 – A/C Clutch
T2f – Double Connector, near compressor
T2i – Double Connector, behind fuse/relay panel
T4l – 4-Pin Connector, on Coolant Fan Control (FC) Control Module
T10 – 10-Pin Connector, on Coolant Fan Control (FC) Control Module
T28 – 28-Pin Connector, on instrument cluster
V7 – Coolant Fan

(231) – Ground connection, in A/C system-coolant fan wiring harness

(L43) – Wire connection (coolant fan), in A/C system-coolant fan wiring harness

Front and rear power windows,

from August 1994

Relay location
For relay location and multiple connectors see also section "component locations".

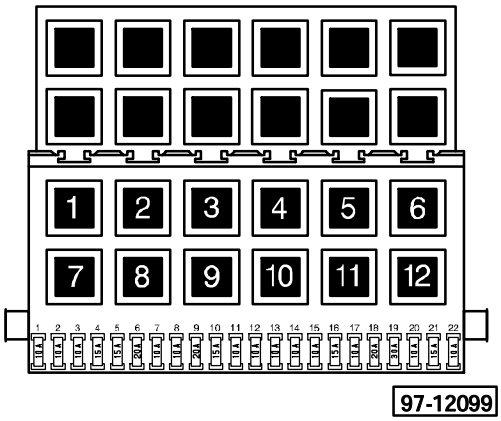

Fuse colors

30A – green
25A – white
20A – yellow
15A – blue
10A – red

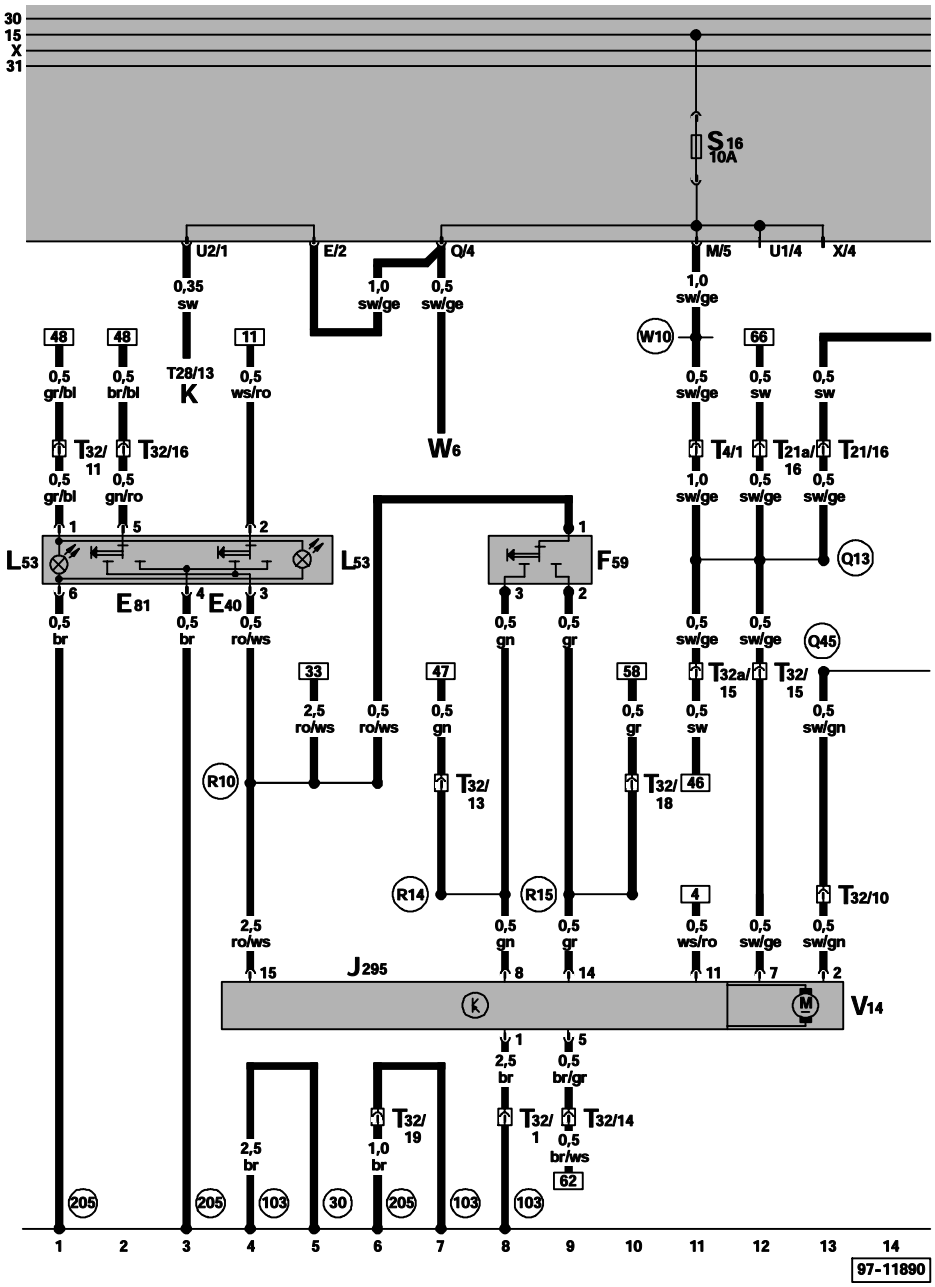

ws = white
sw = black
ro = red
br = brown
gn = green
bl = blue
gr = grey
li = violet
ge = yellow

E40 – Left Front Window Switch, in driver's door
E81 – Right Front Window Switch, in driver's door
F59 – Driver's Door Central Locking System Switch
J295 – Left Front Power Window Control Module, in driver's door
K – Instrument Cluster
L53 – Power Window Switch Light
T4 – 4-Pin Connector, behind fuse/relay panel
T21 – 21-Pin Connector, on left B-pillar
T21a – 21-Pin Connector, on right B-pillar
T28 – 28-Pin Connector, on instrument cluster
T32 – 32-Pin Connector, on left A-pillar, lower part
T32a – 32-Pin Connector, on right A-pillar, lower part
V14 – Left Window Motor
W6 – Glove Compartment Light

(R15) – Plus connection –2– (closed), in driver's door wiring harness

(W10) – Plus connection (15), in rear wiring harness

(30) – Ground connection, –1–, beside fuse/relay panel

(103) – Ground connection –2–, in power window wiring harness

(205) – Ground connection, in driver's door wiring harness

(Q13) – Plus connection (75 as/15), in power window wiring harness

(Q45) – Wire connection (comfort), in power window wiring harness

(R10) – Plus connection –1– (30), in driver's door wiring harness

(R14) – Wire connection –1– (open), in driver's door wiring harness

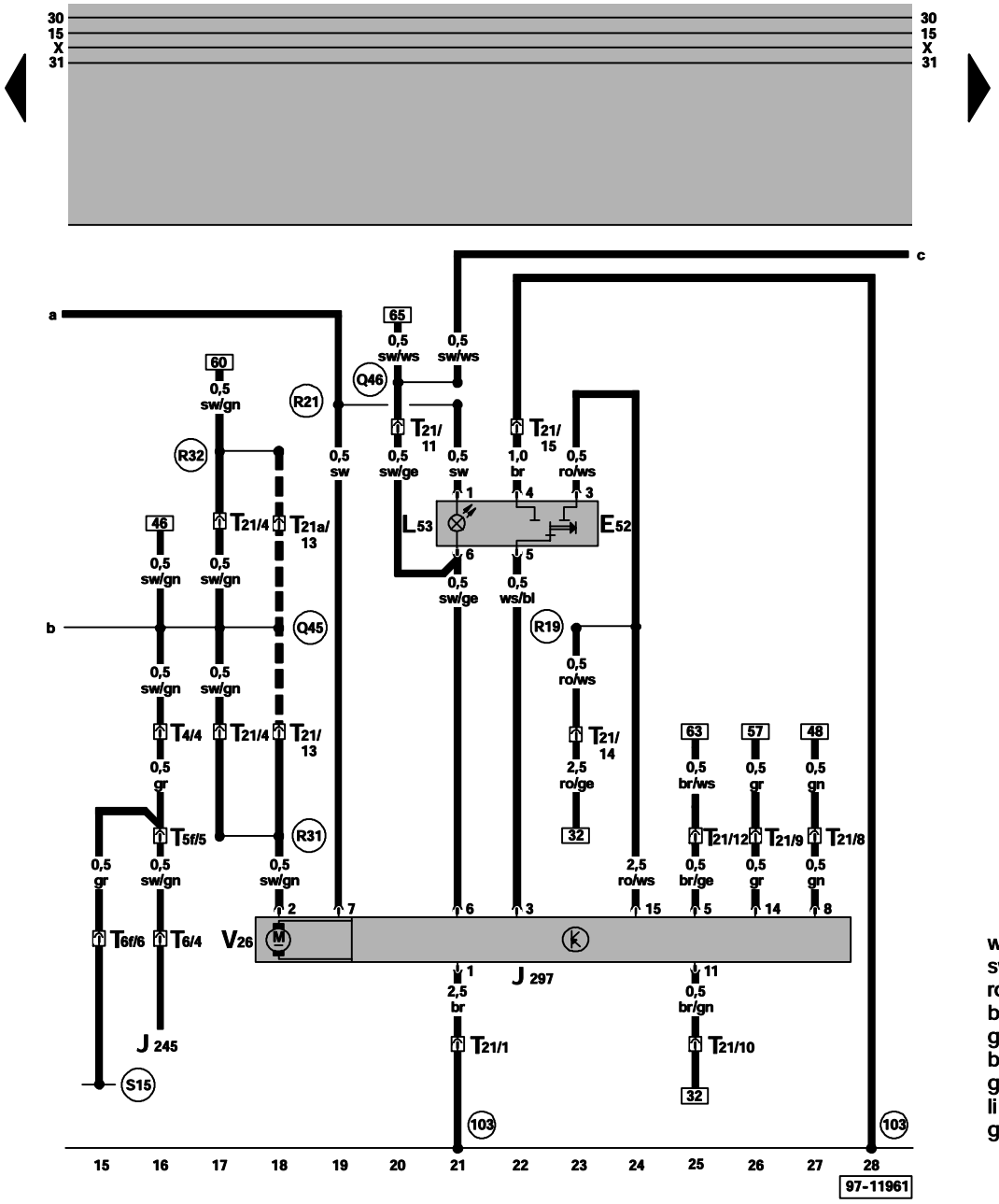

ws = white
sw = black
ro = red
br = brown
gn = green
bl = blue
gr = grey
li = violet
ge = yellow

E52 - Left Rear Window Switch, (In LR Door)
J245 - Power Sunroof Control Module
J297 - Left Rear Power Window Control Module, in left rear door
L53 - Power Window Switch Light
T4 - 4-Pin Connector, below rear seat bench
T5f - 5-Pin Connector, behind fuse/relay panel
T6 - 6-Pin Connector, near sunroof switch
T6f - 6-Pin Connector, below rear seat bench
T21 - 21-Pin Connector, on left B-pillar
T21a - 21-Pin Connector, on right B-pillar
V26 - Left Rear Door Window Motor

(86) - Ground connection -1-, in rear wiring harness

(103) - Ground connection -2-, in power window wiring harness

(Q45) - Wire connection (comfort), in power window wiring harness

(Q46) - Wire connection (child lock), in power window wiring harness

(R19) - Plus connection -1- (30), in left rear door wiring harness

(R21) - Plus connection -3- (15), in left rear door wiring harness

(R31) - Wire connection -1-, in left rear door wiring harness

(S15) - Wire connection (closed), in central locking system wiring harness

▬▬ - Vehicles without central locking system only

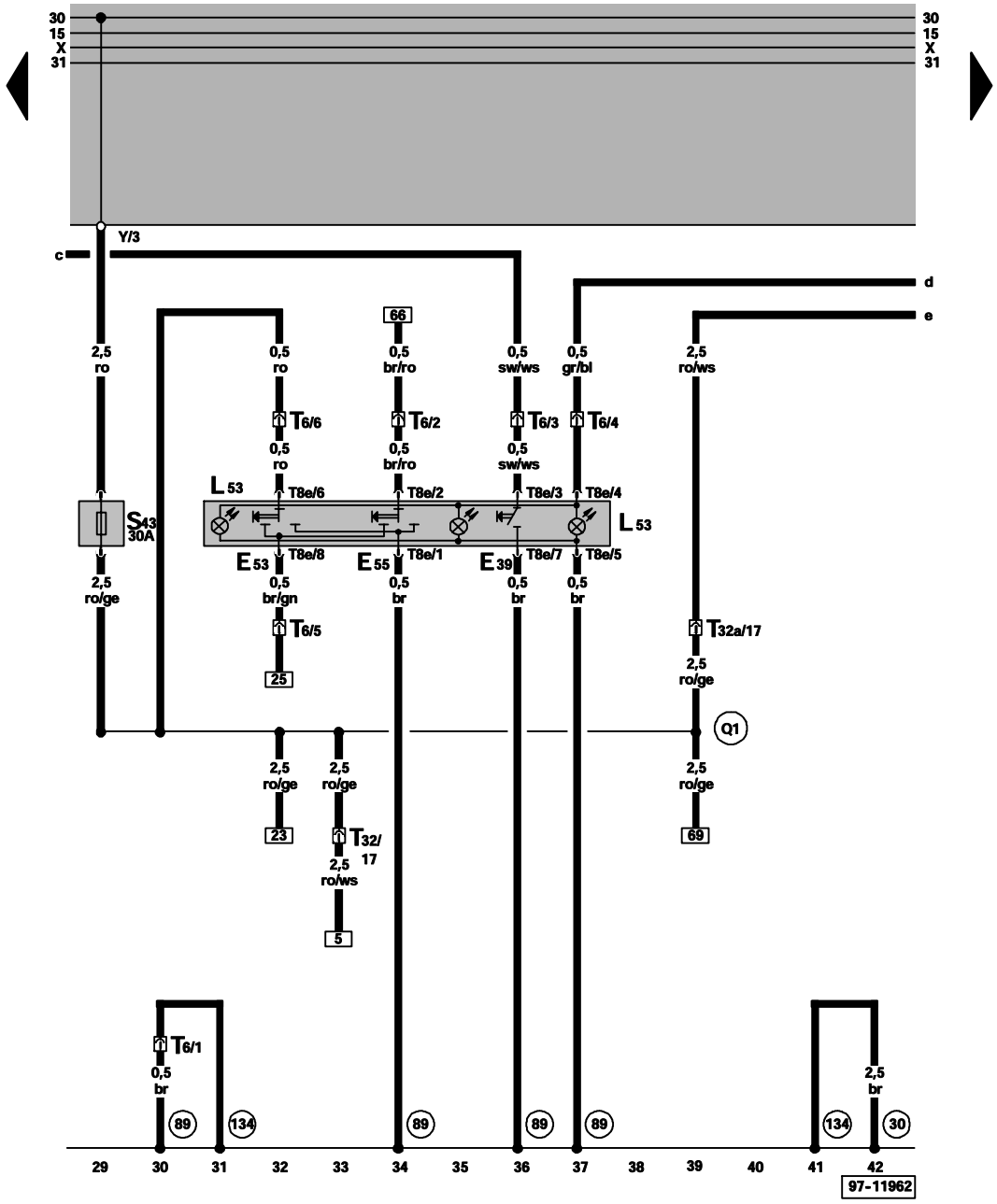

ws = white
sw = black
ro = red
br = brown
gn = green
bl = blue
gr = grey
li = violet
ge = yellow

E39 - Window Lockout Switch, in instrument panel, center
E53 - Left Rear Window Switch, in instrument panel, center
E55 - Right Rear Window Switch, in instrument panel, center
L53 - Power Window Switch Light
S43 - Power Window Circuit Breaker, above fuse/ relay panel
T6 - 6-Pin Connector, behind instrument panel, right
T8e - 8-Pin Connector
T32 - 32-Pin Connector, on left A-pillar, lower part
T32a - 32-Pin Connector, on right A-pillar, lower part

(30) - Ground connection, -1-, beside fuse/relay panel

(89) - Ground connection -1-, in power window wiring harness

(134) - Ground connection -3-, in power window wiring harness

(Q1) - Plus connection (30), in power window wiring harness

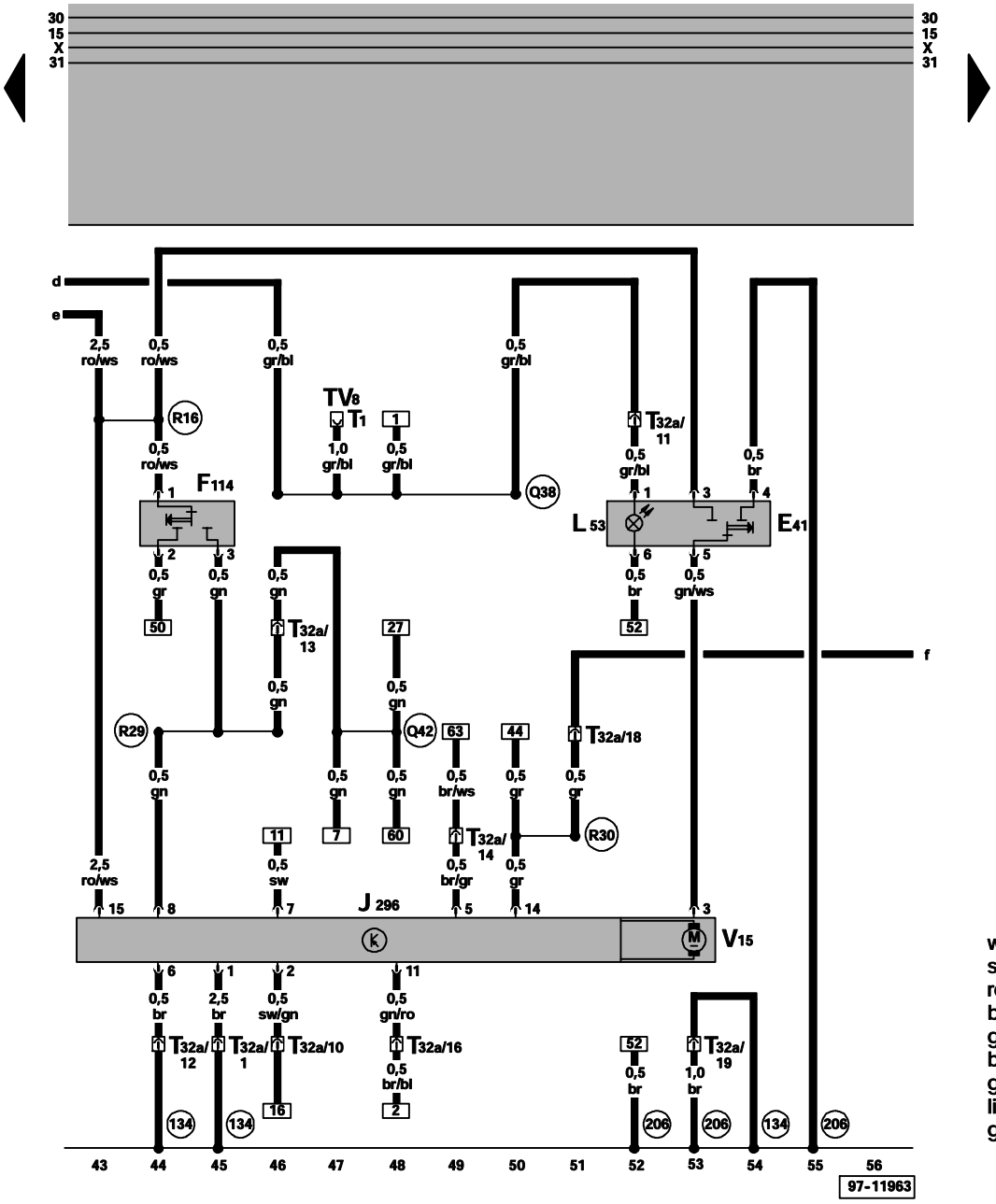

ws = white
sw = black
ro = red
br = brown
gn = green
bl = blue
gr = grey
li = violet
ge = yellow

E41 - Right Front Window Switch, in front passenger's door
F114 - Passenger's Door Central Locking System Switch
J296 - Right Front Power Window Control Module, in front passenger's door
L53 - Power Window Switch Light
T1 - Single Connector
T32a - 32-Pin Connector, on right A-pillar, lower part
V15 - Right Window Motor

134 - Ground connection -3-, in power window wiring harness

206 - Ground connection, in passenger's door wiring harness

Q38 - Plus connection (58b) -1-, in power window wiring harness

Q42 - Wire connection (lock open), in power window wiring harness

R16 - Plus connection -1- (30), in passenger's door wiring harness

R29 - Wire connection -1- (open), in passenger's door wiring harness

R30 - Wire connection -1- (closed), in passenger's door wiring harness

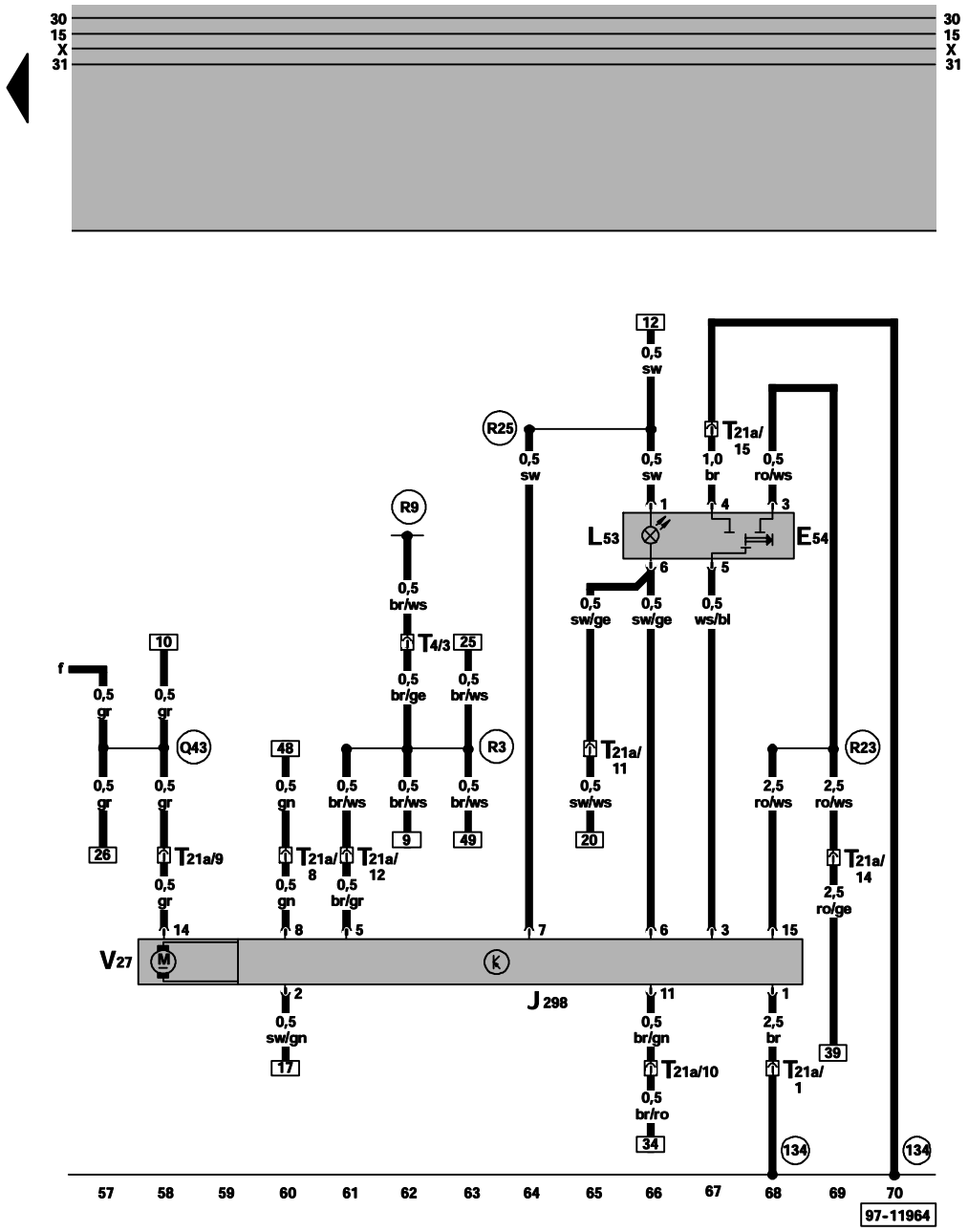

ws = white
sw = black
ro = red
br = brown
gn = green
bl = blue
gr = grey
li = violet
ge = yellow

E54 - Right Rear Window Switch, in right rear door
J298 - Right Rear Power Window Control Module, in right rear door
L53 - Power Window Switch Light
T4 - 4-Pin Connector
T21a - 21-Pin Connector, on right B-pillar
V27 - Right Rear Door Window Motor

Q43 - Wire connection (lock closed), in power window wiring harness

R3 - Wire connection (door contact switch, right and left), in power window wiring harness

R9 - Wire connection (door contact switch), in rear door wiring harness

R23 - Plus connection -1- (30), in right rear door wiring harness

R25 - Plus connection -3- (15), in right rear door wiring harness

Heated seats,

from August 1994

Relay location
For relay location and multiple connectors see also section "component locations".

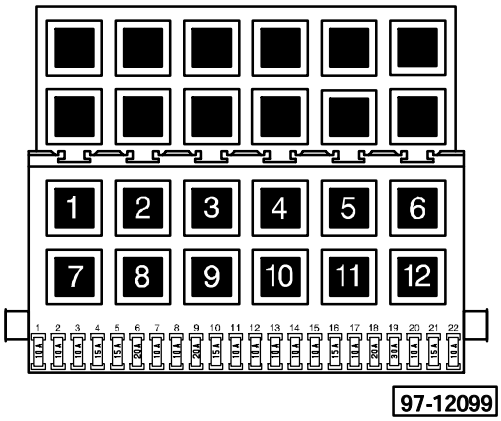

Fuse colors

30A – green
25A – white
20A – yellow
15A – blue
10A – red

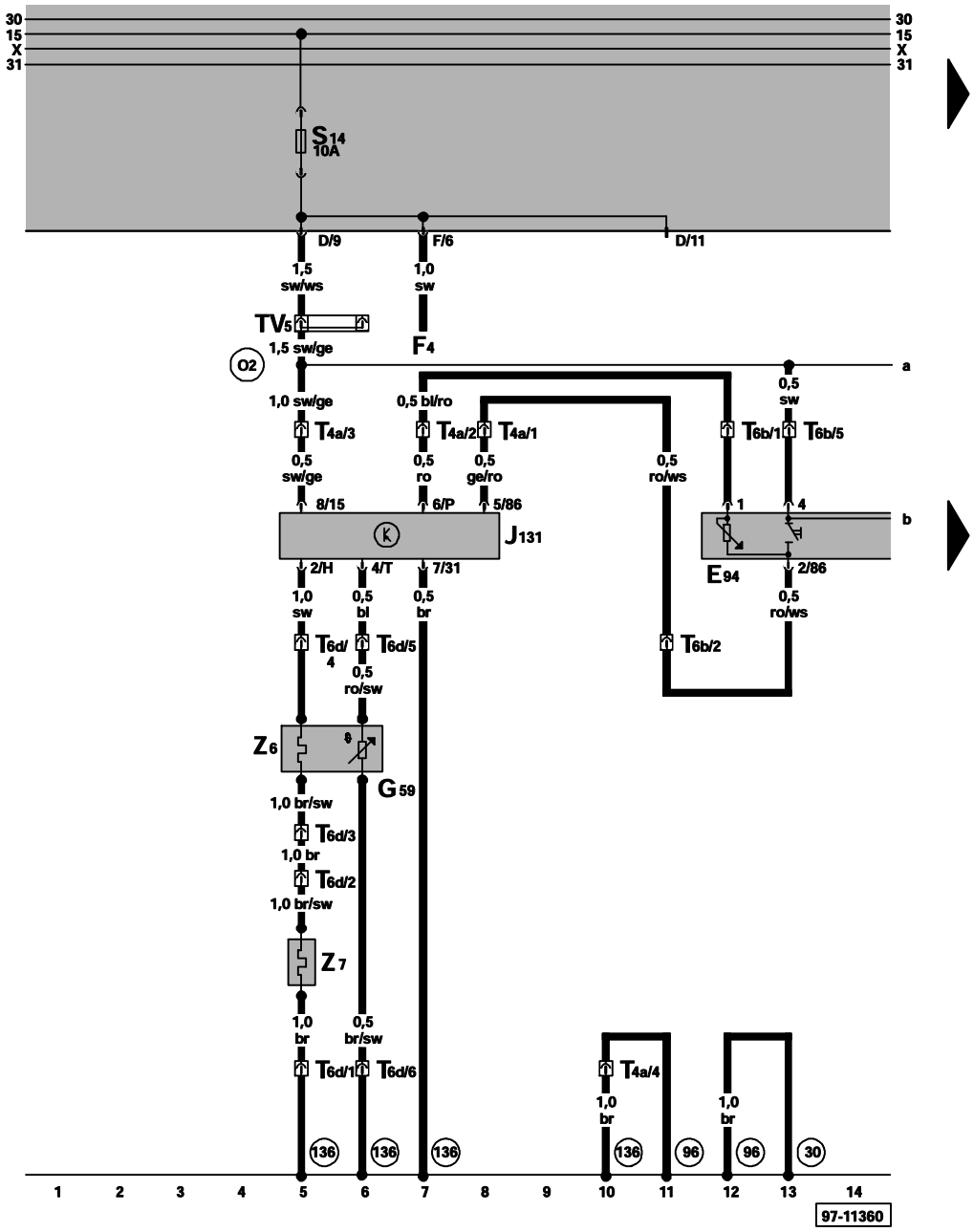

ws = white
sw = black
ro = red
br = brown
gn = green
bl = blue
gr = grey
li = violet
ge = yellow

E94 – Driver's Seat Heat Regulating Switch
F4 – Back-Up Light Switch
G59 – Driver's Seat Heater Temperature Sensor
J131 – Driver's Seat Heater Control Module
T4a – 4-Pin Connector, below diver's seat
T6b – 6-Pin Connector, behind fuse/relay panel
T6d – 6-Pin Connector, below driver's seat
TV5 – Terminal 15a Wire Connector
Z6 – Driver's Seat Heat Element
Z7 – Driver's Backrest Heat Element

(30) – Ground connection, –1–, beside fuse/relay panel

(96) – Ground connection –1–, in heated seats wiring harness

(136) – Ground connection –2–, in heated seats wiring harness

(O2) – Plus connection (15), in heated seats wiring harness

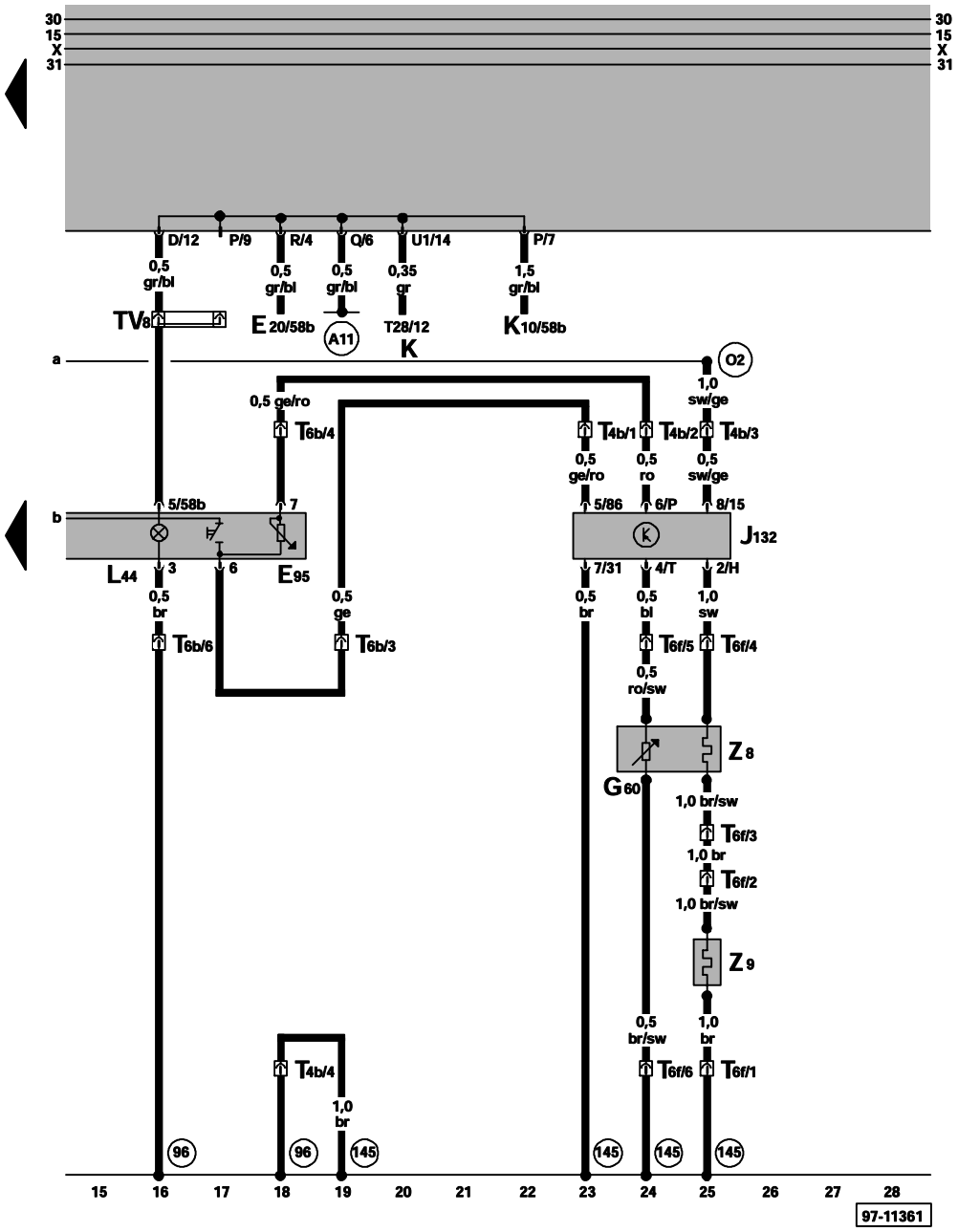

ws = white
sw = black
ro = red
br = brown
gn = green
bl = blue
gr = grey
li = violet
ge = yellow

E20 – Instrument Panel Light Dimmer Switch
E95 – Passenger's Seat Heat Regulating Switch
G60 – Passenger Seat Heater Temperature Sensor
J132 – Passenger's Seat Heater Control Module
K – Instrument Cluster
K10 – Rear Window Defogger Indicator Light
L44 – Seat Heater Switch Illumination Light
T4 – 4-Pin Connector, below passenger's seat
T6b – 6-Pin Connector, behind fuse/relay pan-
elT6f – 6-Pin Connector, below passenger's seat
T28 – 28-Pin Connector, on instrument cluster
Tv8 – Terminal 58b Wire Connector
Z8 – Passenger's Seat Heat Element
Z9 – Passenger's Backrest Heat Element

(96) – Ground connection –1–, in heated seats wiring harness

(145) – Ground connection –3–, in heated seats wiring harness

(A11) – Plus connection (58b) in instrument panel wiring harness

(O2) – Plus connection (15), in heated seats wiring harness

Interior light with delay switch, rear reading lights, make-up mirror lights

from August 1994

Relay location
For relay location and multiple connectors see also section "component locations".

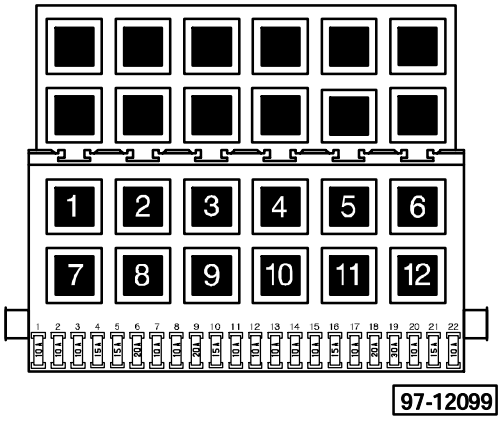

Fuse colors

30A – green
25A – white
20A – yellow
15A – blue
10A – red

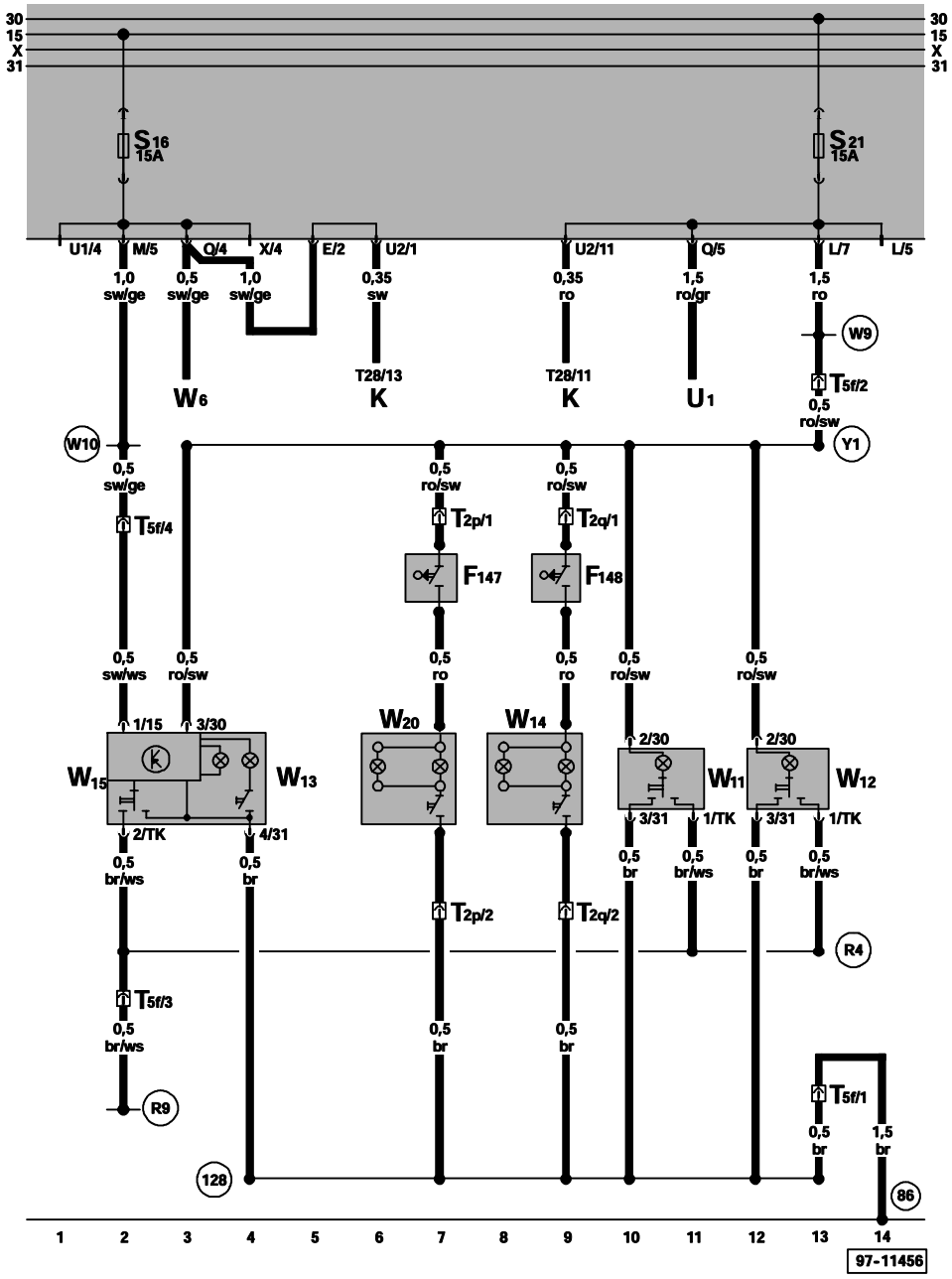

ws = white
sw = black
ro = red
br = brown
gn = green
bl = blue
gr = grey
li = violet
ge = yellow

F147 – Left Make-Up Mirror Light Switch
F148 – Right Make-Up Mirror Light Switch
K – Instrument Cluster
T2p – Double Connector, on left A-pillar, upper part
T2q – Double Connector, on right A-pillar, upper part
T5f – 5-Pin Connector, left A-pillar, near fuse/relay panel
T28 – 28-Pin Connector, on instrument cluster
U1 – Cigarette Lighter
W6 – Glove Compartment Light
W11 – Left Rear Reading Light
W12 – Right Rear Reading Light
W13 – Right Front Map/Reading Light
W14 – Right Make-Up Mirror Light
W15 – Interior Light With Delay Switch
W20 – Left Make-Up Mirror Light

86 – Ground connection –1–, in rear wiring harness
128 – Ground connection –1–, in interior light wiring harness
R4 – Wire connection –1–, in interior light wiring harness
R9 – Wire connection (door contact switch), in rear door wiring harness
W9 – Plus connection (30), in rear wiring harness
W10 – Plus connection (15), in rear wiring harness
Y1 – Plus connection (30), in interior light wiringharness

Heated power mirrors,

from August 1994

Relay location
For relay location and multiple connectors see also section "component locations".

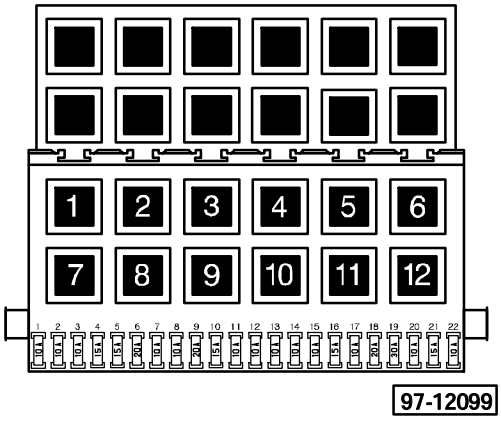

Fuse colors

30A – green
25A – white
20A – yellow
15A – blue
10A – red

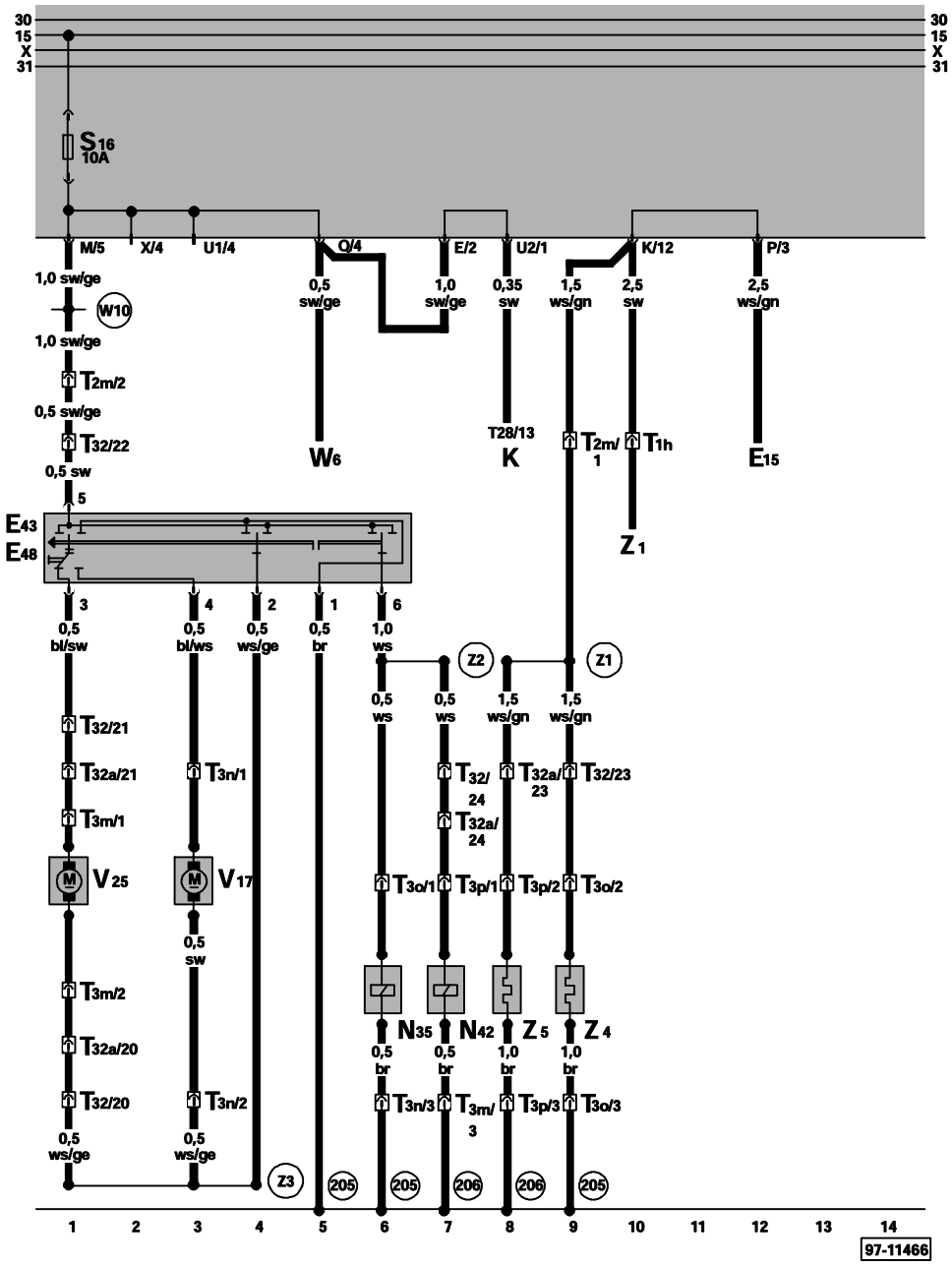

ws = white
sw = black
ro = red
br = brown
gn = green
bl = blue
gr = grey
li = violet
ge = yellow

E15 – Rear Window Defogger Switch
E43 – Mirror Adjustment Switch
E48 – Mirror Selector Switch
K – Instrument Cluster
N35 – Driver's Side Mirror Magnetic Clutch
N42 – Passenger's Side Mirror Magnetic Clutch
T1h – Single Connector, in luggage compartment, left
T2m – Double Connector, behind fuse/relay panel
T3m – 3-Pin Connector, in passenger's door
T3n – 3-Pin Connector, in driver's door
T3o – 3–Pin Connector, in driver's door
T3p – 3-Pin Connector, in passenger's door
T28 – 28-Pin Connector, in instrument cluster
T32 – 32-Pin Connector, on left A-pillar
T32a – 32-Pin Connector, on right A-pillar
V17 – Driver's Side Mirror Adjustment Motor
V25 – Passenger's Side Mirror Adjustment Motor
W6 – Glove Compartment Light
Z1 – Rear Window Defogger/Heat Element
Z4 – Driver's Side Heated Mirror
Z5 – Passenger's Side Heated Mirror

205 – Ground connection, in driver's door wiring harness
206 – Ground connection, in passenger's door wiring harness
W10 – Plus connection (15), in rear wiring harness
Z1 – Wire connection –1–, in power heated mirror wiring harness
Z2 – Wire connection –2–, in power heated mirror wiring harness
Z3 – Wire connection –3–, in power heated mirror wiring harness

Heated washer nozzles,

from August 1994

Relay location
For relay location and multiple connectors see also section "component locations".

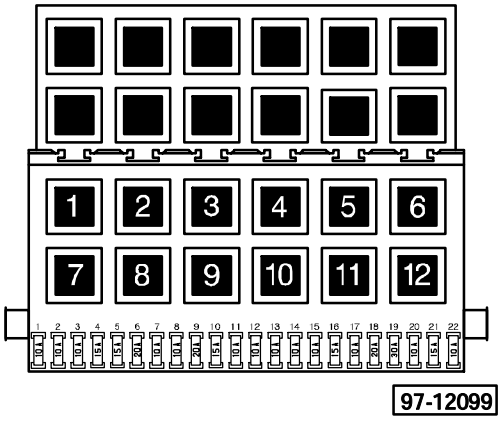

Fuse colors

30A – green
25A – white
20A – yellow
15A – blue
10A – red

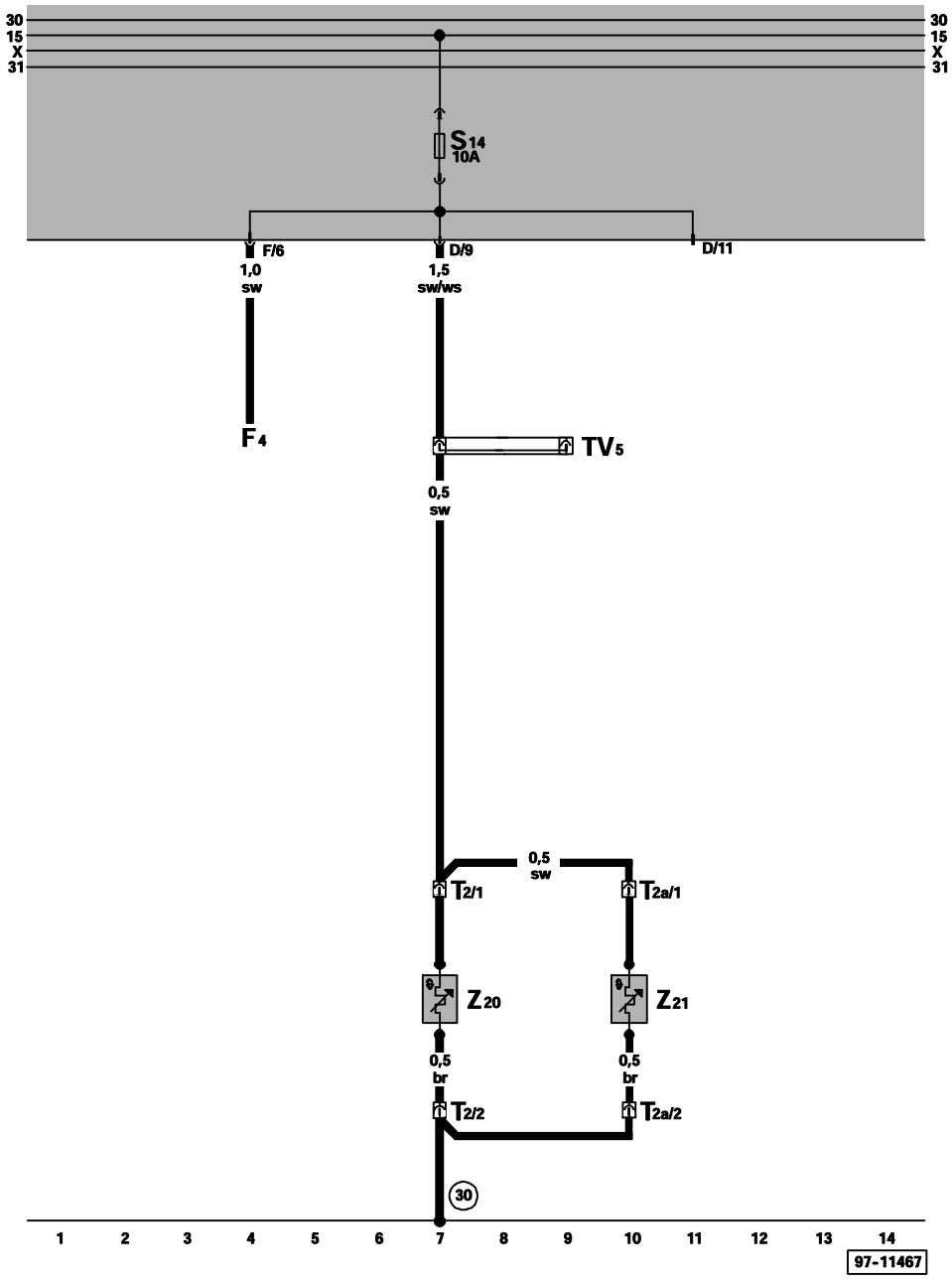

ws = white
sw = black
ro = red
br = brown
gn = green
bl = blue
gr = grey
li = violet
ge = yellow

F4 – Back-Up Light Switch
T2 – Double Connector, on engine hood
T2a – Double Connector, on engine hood
TV5 – Terminal 15a Wire Connector, above fuse/relay panel
Z20 – Left Washer Nozzle Heater
Z21 – Right Washer Nozzle Heater

(30) – Ground connection, –1–, beside fuse/relay panel

Trunk lid release, sedan only,

from August 1994

Relay location
For relay location and multiple connectors see also section "component locations".

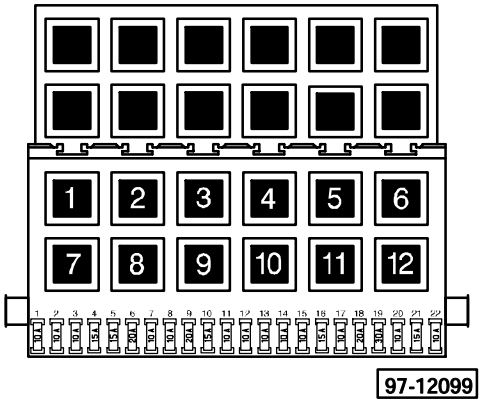

Fuse colors

30A – green
25A – white
20A – yellow
15A – blue
10A – red

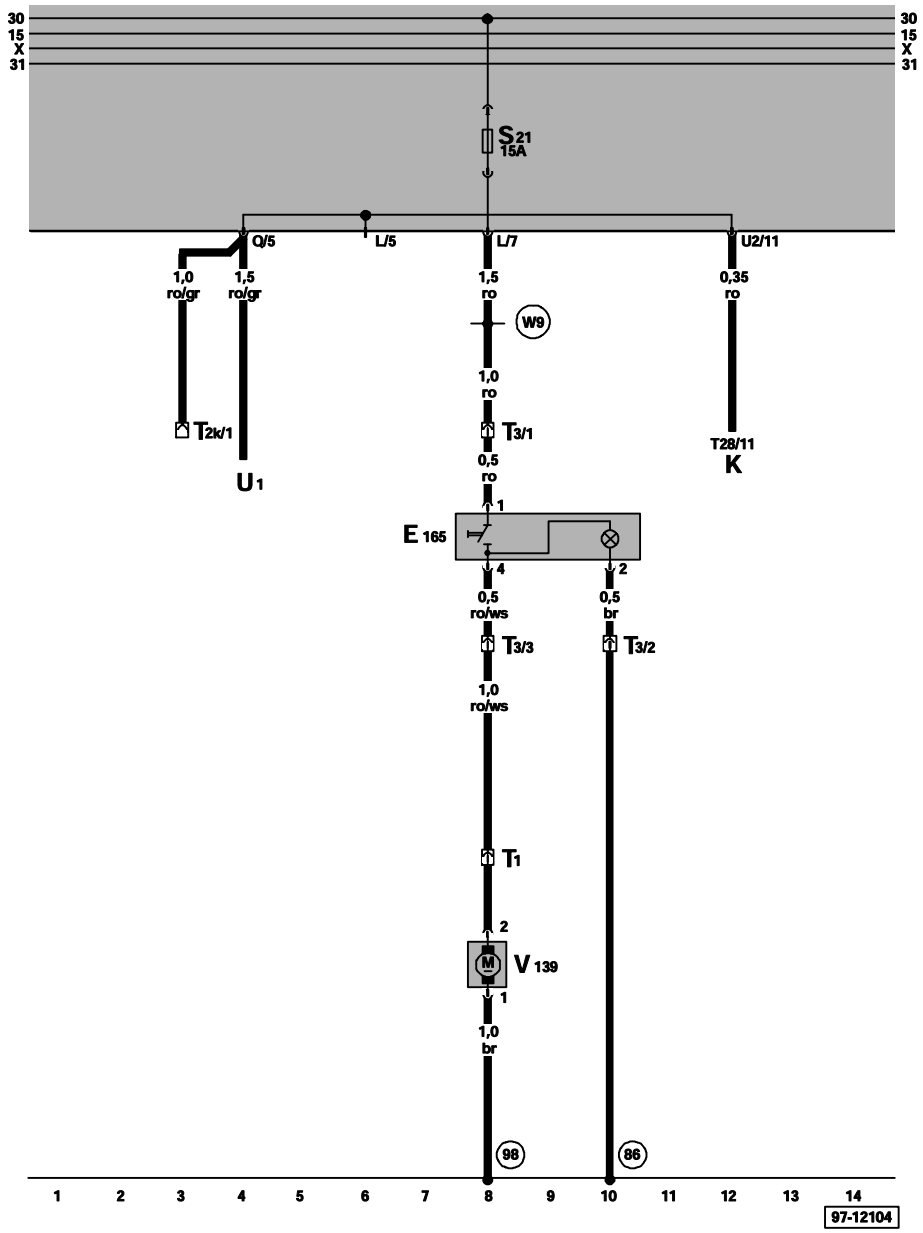

ws = white
sw = black
ro = red
br = brown
gn = green
bl = blue
gr = grey
li = violet
ge = yellow

E165 – Trunk Lid Release Switch
K – Instrument Cluster
T1 – Single Connector, in luggage compartment, left
T2k – Double Connector, behind fuse/relay panel
T3 – 3-Pin Connector, near parking brake lever, below console
T28 – 28-Pin Connector, on instrument cluster
U1 – Cigarette Lighter
V139 – Trunk Lid Release Motor

(86) – Ground connection –1–, in rear wiring harness

(98) – Ground connection, in rear lid wiring harness

(W9) – Plus connection (30), in rear wiring harness

Anti-lock brake system (ABS) with electronic differential lock (EDL),

from August 1994

Relay location
For relay location and multiple connectors see also section "component locations".

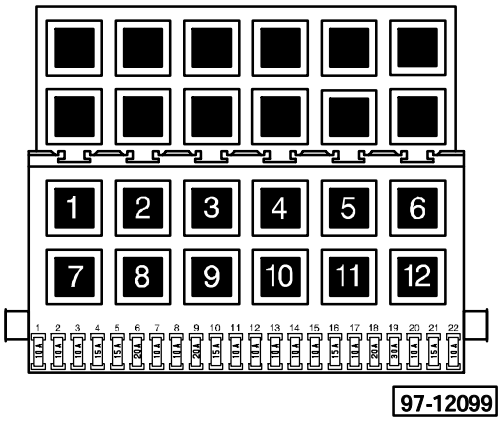

Fuse colors

30A – green
25A – white
20A – yellow
15A – blue
10A – red

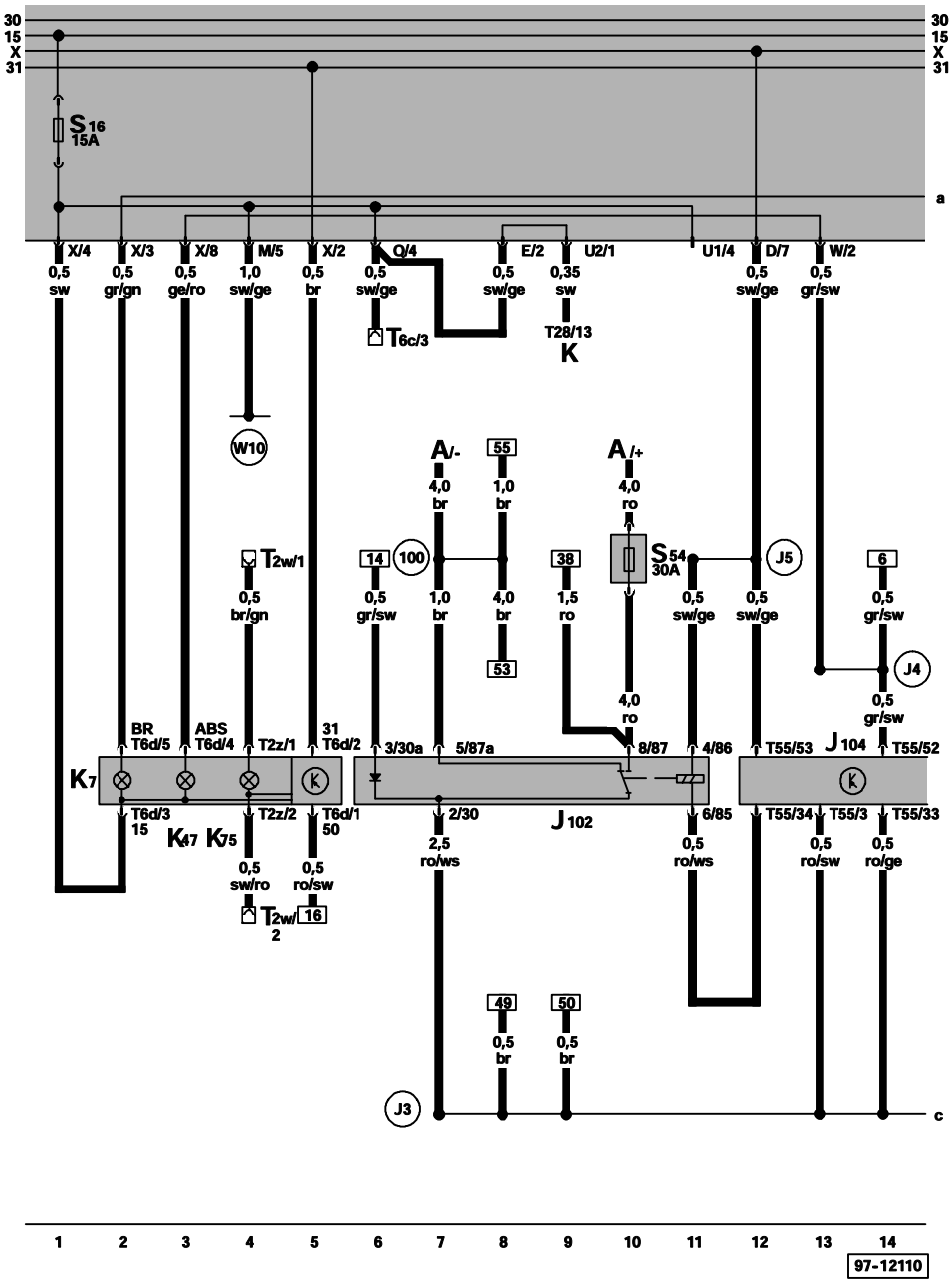

ws = white
sw = black
ro = red
br = brown
gn = green
bl = blue
gr = grey
li = violet
ge = yellow

A – Battery
J102 – ABS Relay, on auxiliary relay panel, behind instrument panel ,left
J104 – ABS Control Module (w/EDL), below rear seat bench
K – Instrument Cluster
K7 – Brake and Parking Brake Warning Light (01047)
K47 – ABS Warning Light
K75 – Airbag Warning Light
S54 – ABS Valves Fuse
T2w – Double Connector, behind fuse/relay panel
T2z – Double Connector
T6 – 6-Pin Connector, behind fuse/relay panel
T28 – 28-Pin Connector, on instrument cluster
T55 – 55-Pin Connector

100 – Ground connection -1-, in ABS wiring harness

J3 – Wire connection -1-, in ABS wiring harness

J4 – Wire connection (diagnostic), in ABS wiring harness

J5 – Wire connection -2-, in ABS wiring harness

W10 – Plus connection (15), in rear wiring harness

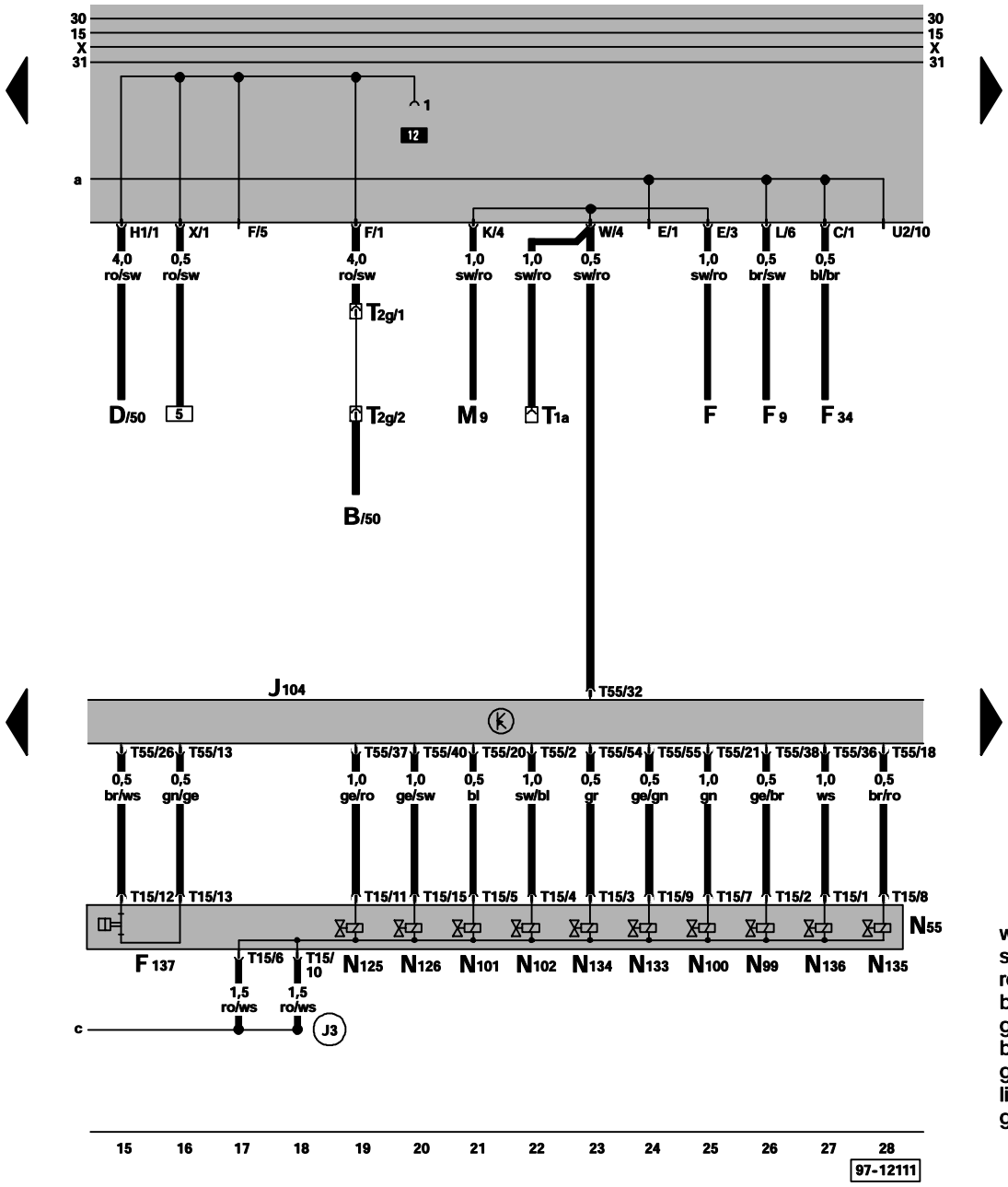

ws = white
sw = black
ro = red
br = brown
gn = green
bl = blue
gr = grey
li = violet
ge = yellow

B – Starter
D – Ignition/Starter Switch
F – Brake Light Switch (00526–2131)
F9 – Parking Brake Warning Light Switch
F34 – Brake Fluid Level Warning Switch
F137 – ABS Pressure Control Switch (00547–2133)
J104 – ABS Control Module (w/EDL), below rear seat bench
M9 – Left Brake Light
N55 – ABS Hydraulic Unit
N99 – Right Front ABS Inlet Valve (00259–1114)
N100 – Right Front ABS Outlet Valve (00267–1134)
N101 – Left Front ABS Inlet Valve (00257–1112)
N102 – Left Front ABS Outlet Valve (00265–1132)
N125 – Differential Lock Valve 1 (00279–1223)
N126 – Differential Lock Valve 2 (00280–1224)
N133 – Right Rear ABS Inlet Valve (00273–1211)
N135 – Right Rear ABS Outlet Valve (00275–1213)
N136 – Left Rear ABS Outlet Valve (00276–1214)
T1a – Single Connector, behind fuse/relay panel
T2g – Double Connector, behind fuse/relay panel
T15 – 15-Pin Connector
T55 – 55-Pin Connector

(J3) – Wire connection –1–, in ABS wiring harness

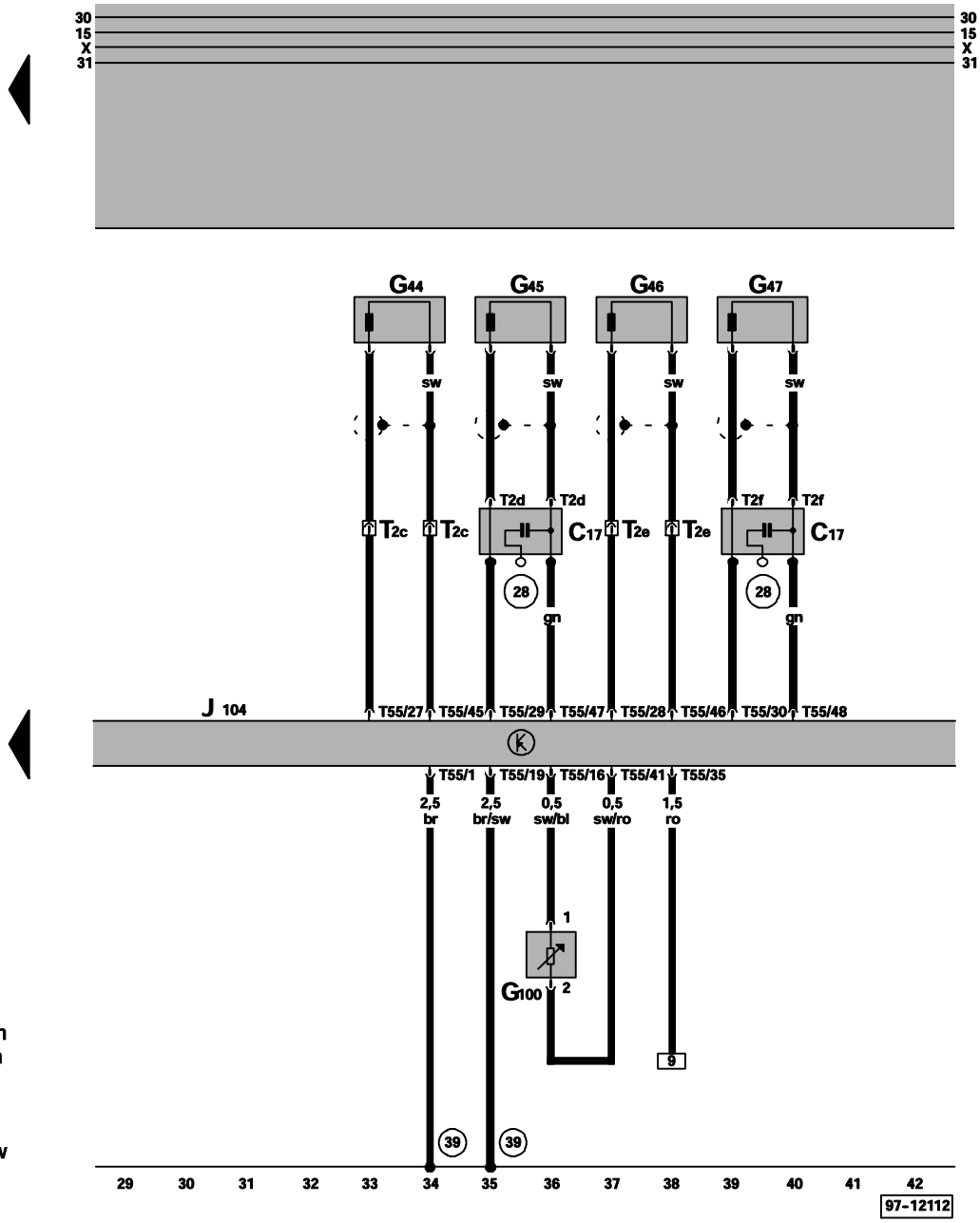

ws = white
sw = black
ro = red
br = brown
gn = green
bl = blue
gr = grey
li = violet
ge = yellow

C17 – ABS Speed Sensor Capacitor
G44 – Right Rear ABS Wheel Speed Sensor (00287–1243)
G45 – Right Front ABS Wheel Speed Sensor (00285–1241)
G46 – Left Rear ABS Wheel Speed Sensor (00290–1311)
G47 – Left Front ABS Wheel Speed Sensor (00283–1233)
G100 – Brake Pedal Position Sensor (00793–3231)
J104 – ABS Control Module (w/EDL), below rear seat bench
T2c – Double Connector, below rear seat bench
T2d – Double Connector, on firewall, right
T2e – Double Connector, below rear seat bench
T2f – Double Connector, on firewall, left
T55 – 55-Pin Connector
(28) – Ground connection, on firewall
(39) – Ground connection, below rear seat bench, left

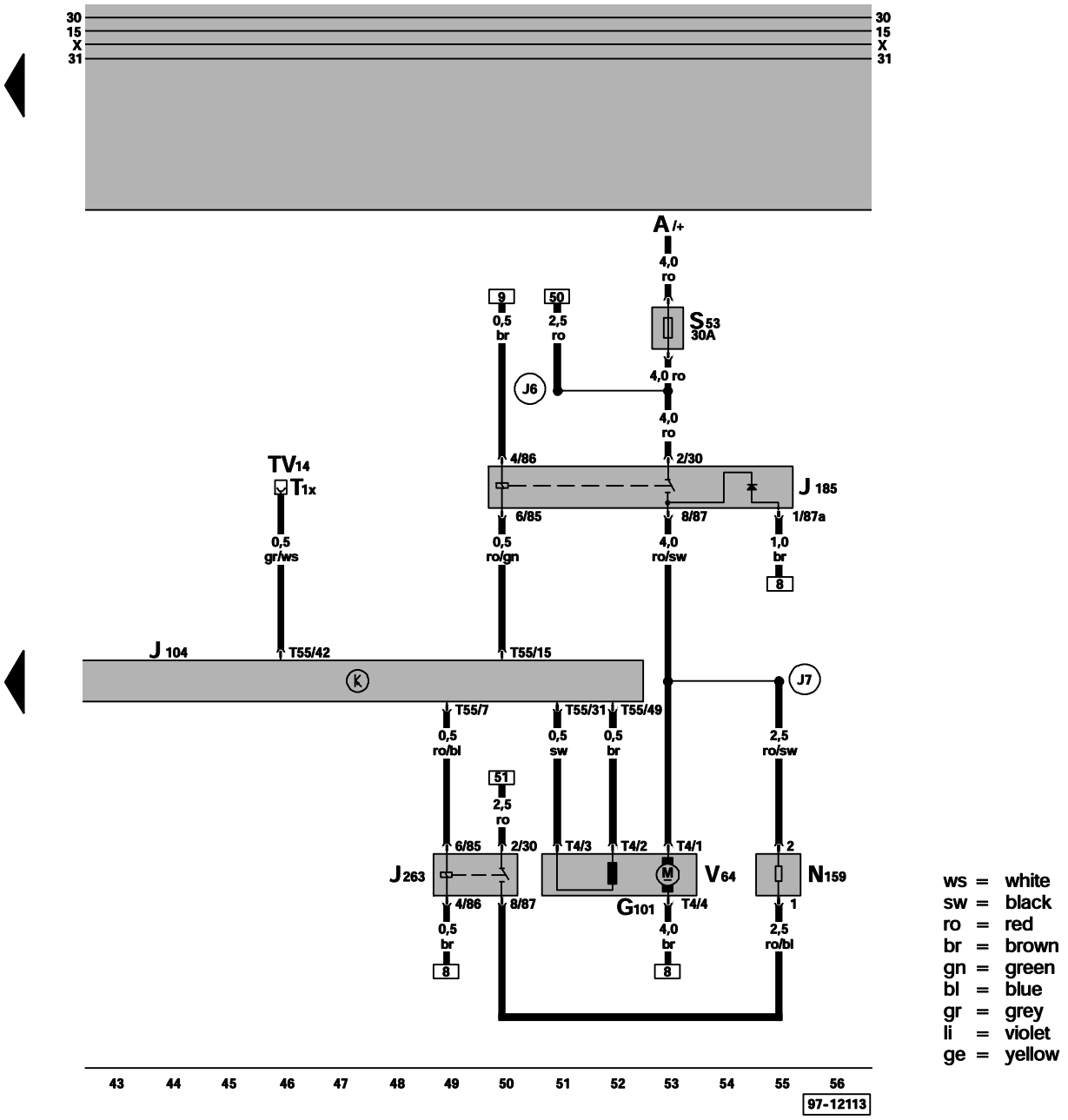

ws = white
sw = black
ro = red
br = brown
gn = green
bl = blue
gr = grey
li = violet
ge = yellow

A – Battery
G101 – Hydraulic Pump Sender (00794–3232)
J104 – ABS Control Module (w/EDL), below rear seat bench
J185 – ABS Hydraulic Pump Relay (01277–4134)
J263 – Electronic Differential Lock Cut-Off Relay (02178–4141)
N159 – Electronic Differential Lock Series Resistance (00634)
S53 – ABS Hydraulic Pump Fuse
T1x – Single Connector, on Data Link Connector(DLC) Wire Connector
T4 – 4-Pin Connector
T55 – 55-Pin Connector
TV14 – Data Link Connector (DLC) Wire Connector, behind console
V64 – ABS Hydraulic Pump (01276–4133)
J6 – Plus connection –2– (30), in ABS wiring harness
J7 – Wire connection –3–, in ABS wiring harness

Cruise control,

from August 1994

Relay location
For relay location and multiple connectors see also section "component locations".

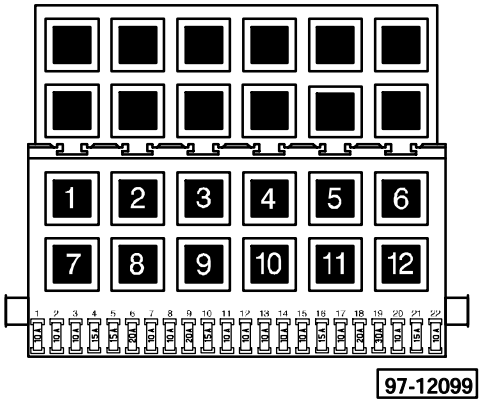

Fuse colors

30A – green
25A – white
20A – yellow
15A – blue
10A – red

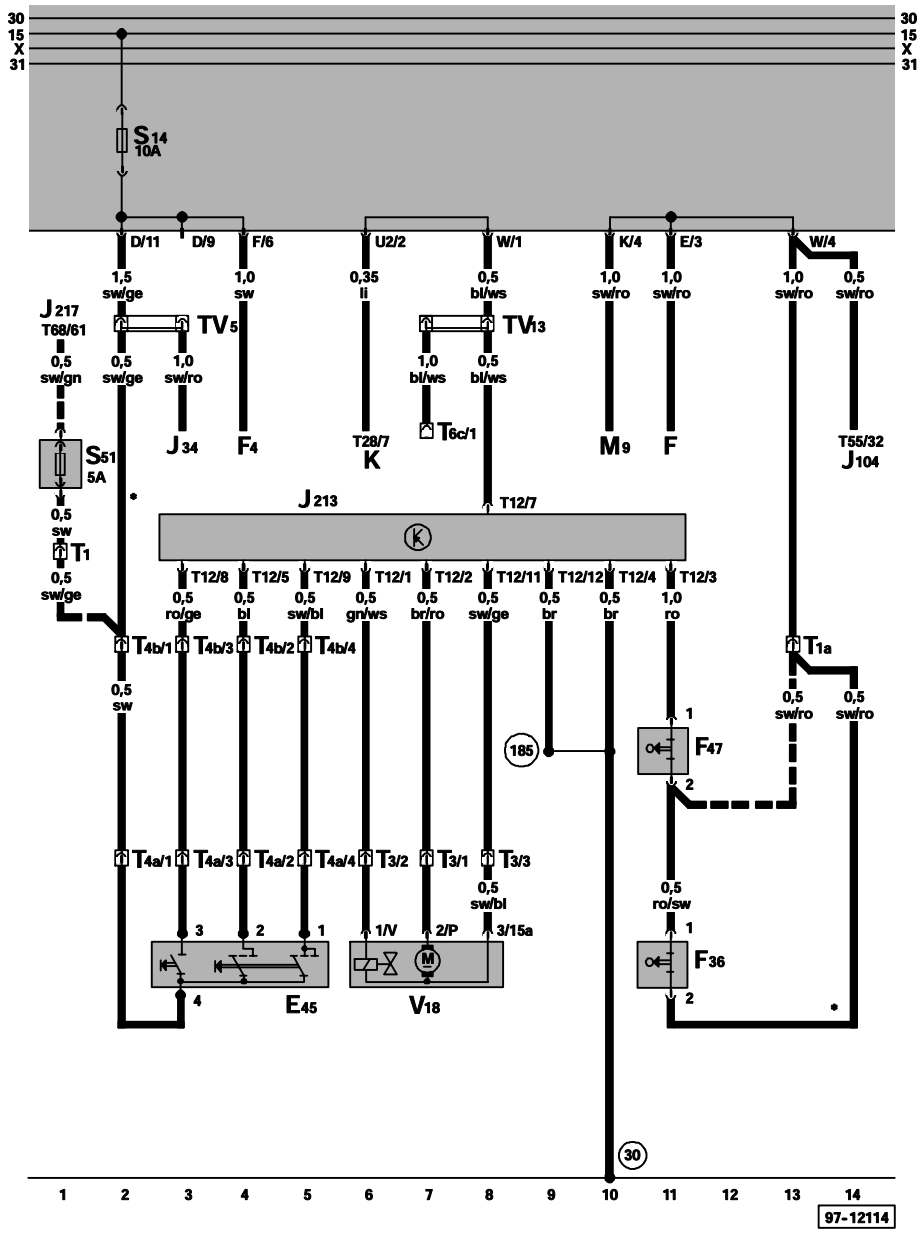

ws = white
sw = black
ro = red
br = brown
gn = green
bl = blue
gr = grey
li = violet
ge = yellow

E45 – Cruise Control Switch
F – Brake Light Switch
F4 – Back-Up Light Switch
F36 – Clutch Vacuum Vent Valve Switch*
F47 – Brake Vacuum Vent Valve Switch
J34 – Seat Belt Warning System Relay
J104 – ABS Control Module (w/EDL)
J213 – Cruise Control, Control Module, behind console
J217 – Transmission Control Module (TCM)
K – Instrument Cluster
M9 – Left Brake Light
S51 – Fuse for cruise control, above fuse/relay panel
T1 – Single Connector, behind fuse/relay panel
T1a – Single Connector, behind fuse/relay panel
T3 – 3-Pin Connector, behind fuse/relay panel
T4a – 4-Pin Connector, behind steering column switch cover
T4b – 4-Pin Connector, near steering column
T6c – 6-Pin Connector, behind fuse/relay panel
T12 – 12-Pin Connector
T28 – 28-Pin Connector, on instrument cluster
T55 – 55-Pin Connector, on ABS Control Module (w/EDL)
T68 – 68-Pin Connector, on Transmission Control Module (TCM)
TV5 – Terminal 15a Wire Connector, above fuse/relay panel
TV13 – Vehicle Speed Signal Wire Connector, above fuse/relay panel
V18 – Cruise Control Vacuum Pump
(30) – Ground connection, –1–, beside fuse/relay panel
(185) – Ground connection, in cruise control wiring harness
* – Manual transmission only
▬▬ – Automatic transmission only

Central locking system and anti-theft alarm system,

from August 1994

Relay location
For relay location and multiple connectors see also section "component locations".

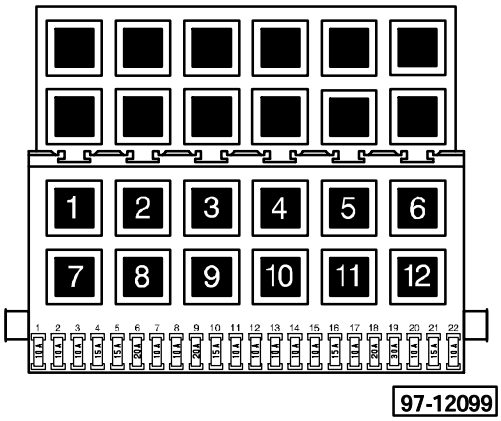

Fuse colors

30A – green
25A – white
20A – yellow
15A – blue
10A – red

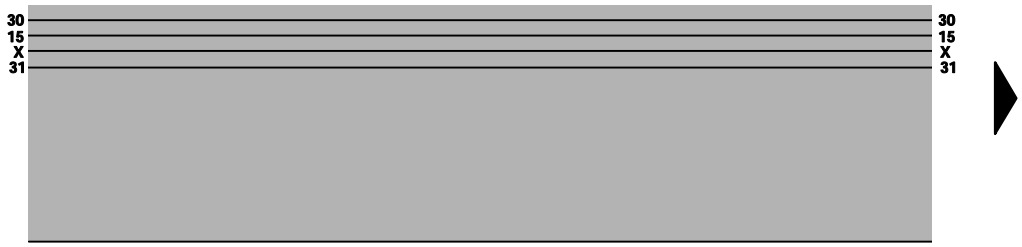

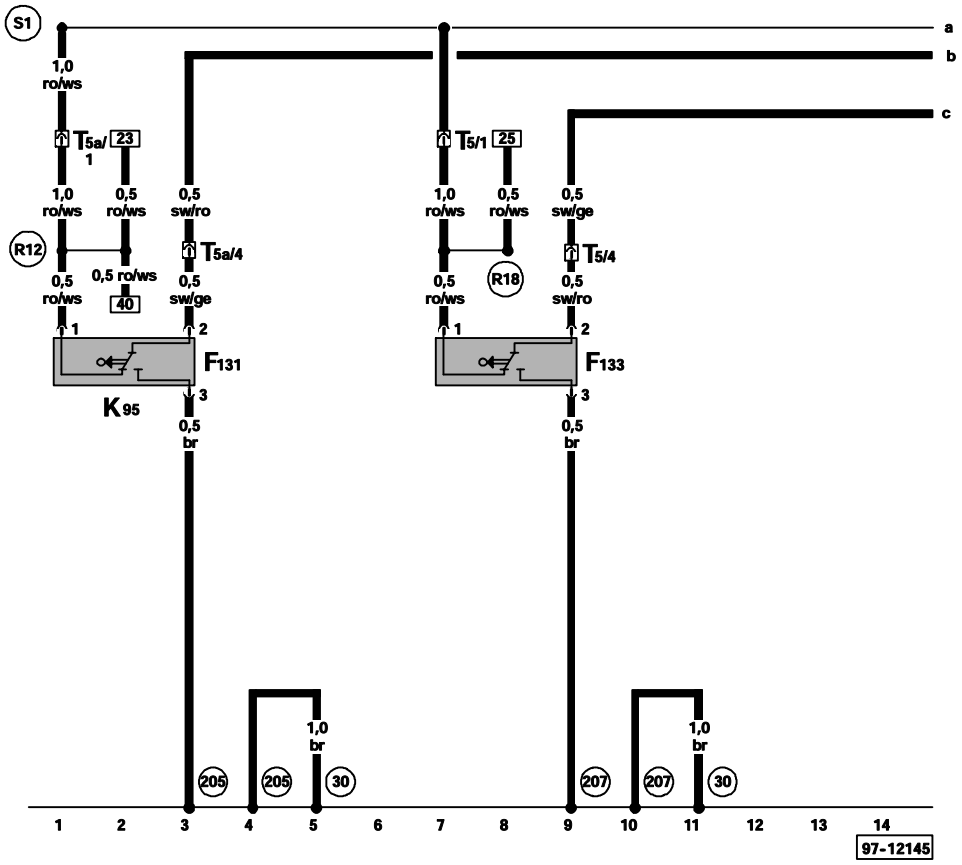

ws = white
sw = black
ro = red
br = brown
gn = green
bl = blue
gr = grey
li = violet
ge = yellow

F131 – Left Front Central Locking System Activator/Switch
F133 – Right Front Central Locking System Activator/Switch
T5 – 5-Pin Connector, on B-pillar, right
T5a – 5-Pin Connector, on B-pillar, left

(30) – Ground connection, –1–, beside fuse/relay panel

(205) – Ground connection, in driver's door wiring harness

(207) – Ground connection, in left rear door wiring harness

(R12) – Plus connection –3– (30), in driver's door wiring harness

(R18) – Plus connection –3– (30), in passenger's door wiring harness

(S1) – Plus connection (30) –1–, in central locking system wiring harness

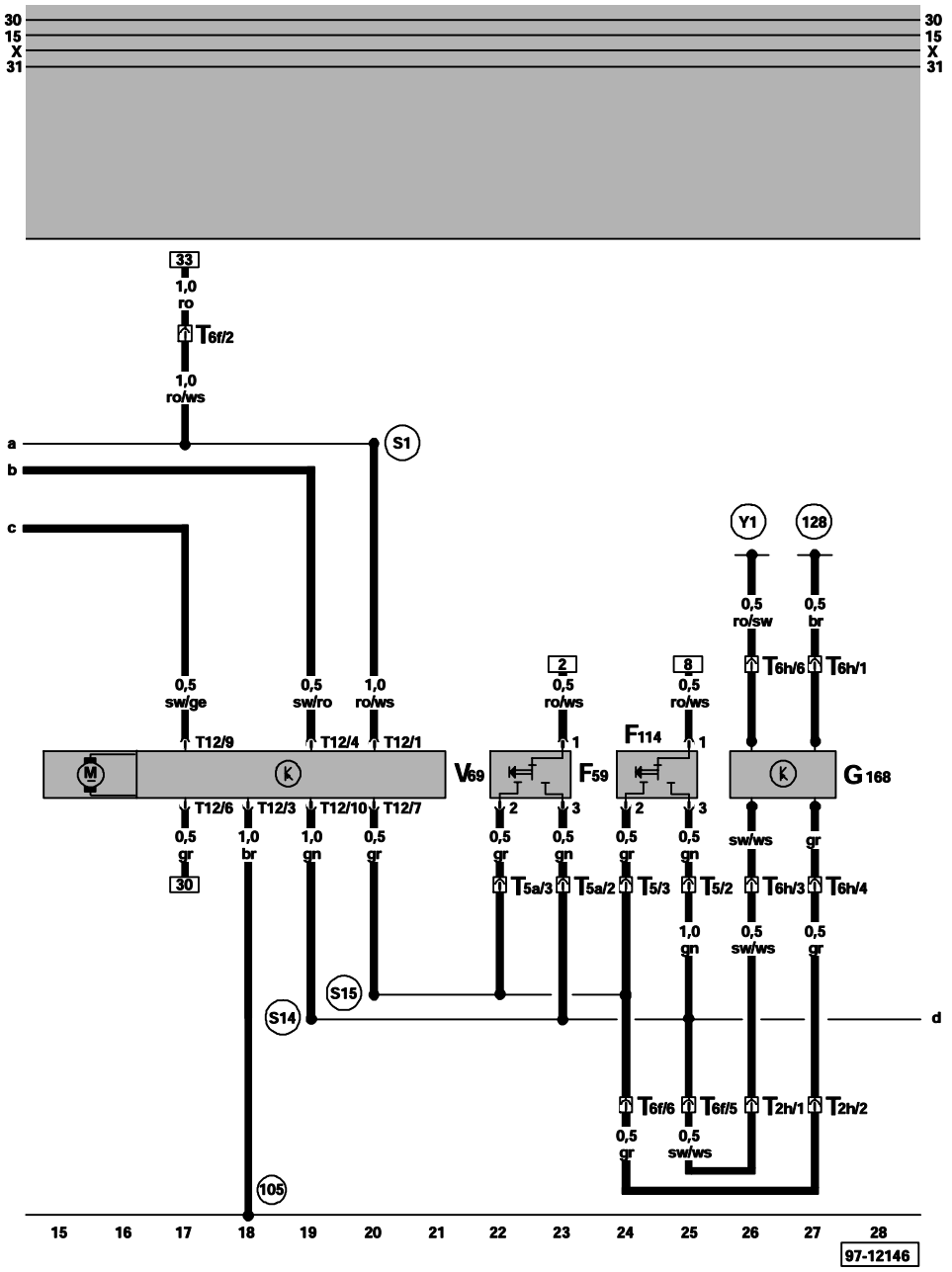

ws = white
sw = black
ro = red
br = brown
gn = green
bl = blue
gr = grey
li = violet
ge = yellow

F59 – Driver's Door Central Locking System Switch
F114 – Passenger's Door Central Locking System Switch
G168 – Infrared Sensor for Central Locking
T2h – Double Connector, behind fuse/relay panel
T5 – 5-pin Connector, on B-pillar, right
T5a – 5-Pin Connector, on B-pillar, left
T6f – 6-Pin Connector, below rear seat bench
T6h – 6-Pin Connector, in inside rear mirror
T12 – 12-pin Connector
V69 – Central Locking System Pump and Control Module

105 – Ground connection –1–, in central locking system wiring harness

128 – Ground connection –1–, in interior light wiring harness

S1 – Plus connection (30) –1–, in central locking system wiring harness

S14 – Wire connection (open), in central locking system wiring harness

S15 – Wire connection (closed), in central locking system wiring harness

Y1 – Plus connection (30), in interior light wiring harness

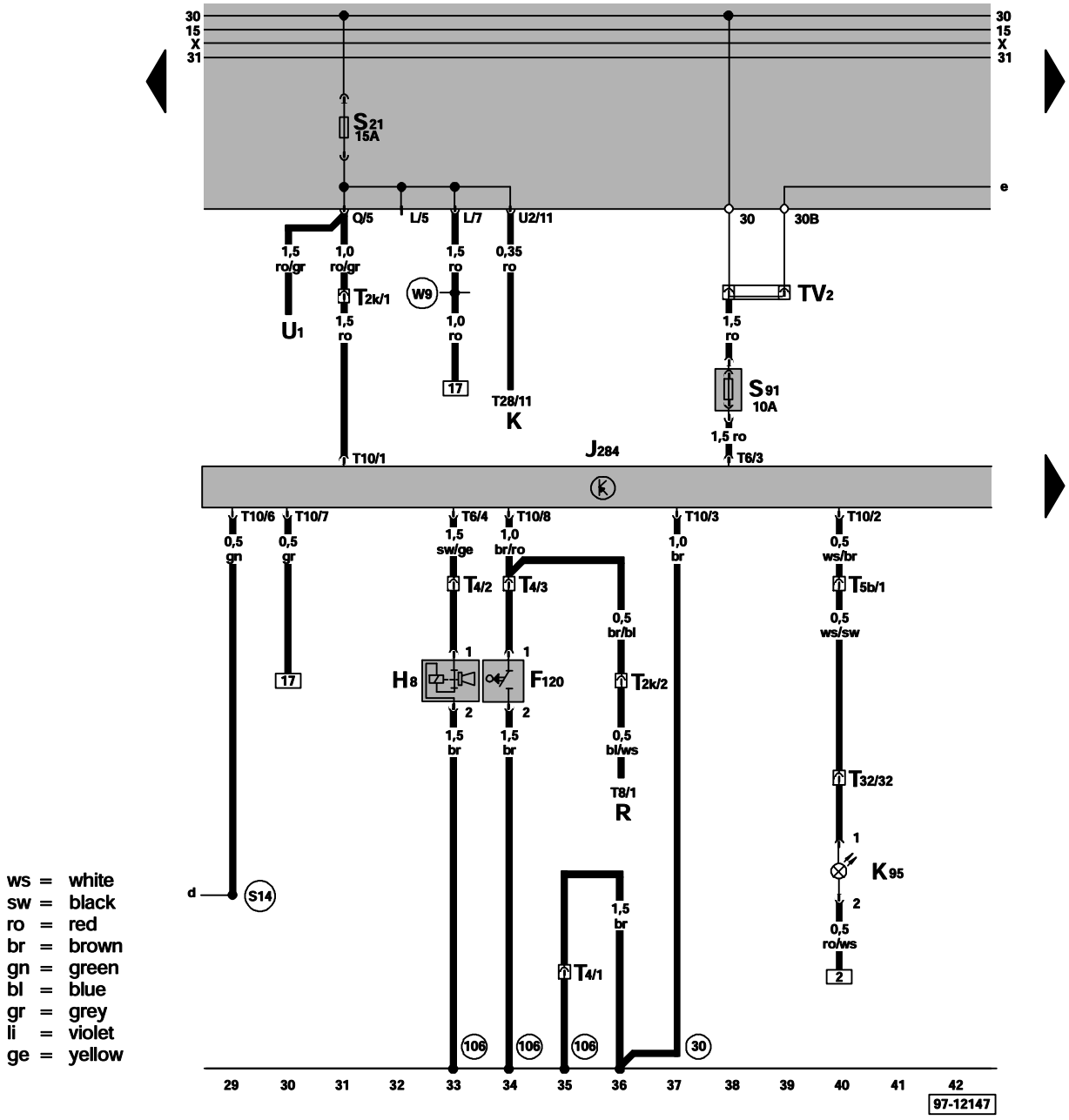

ws = white
sw = black
ro = red
br = brown
gn = green
bl = blue
gr = grey
li = violet
ge = yellow

F120 – Hood Alarm Switch
H8 – Alarm Horn
J284 – Alarm System Control Module, behind instrument panel , left, above fuse/relay panel
K – Instrument Cluster
K95 – Alarm System Indicator Light
R – Radio
S91 – Alarm System Control Module Fuse
T2k – Double Connector, behind fuse/relay panel
T4 – 4-Pin Connector, behind fuse/relay panel
T5b – 5-Pin Connector, on left A-pillar, lower part
T6 – 6-Pin Connector
T8 – 8-Pin Connector, on radio
T10 – 10-Pin Connector
T28 – 28-Pin Connector, on instrument cluster
T32 – 32-Pin Connector, on left A-pillar, lower part
TV2 – Terminal 30 (B+) Wire Connector, behind fuse/relay panel
U1 – Cigarette Lighter
(30) – Ground connection, –1–, beside fuse/relay panel
(106) – Ground connection, in alarm system wiring harness
(S14) – Wire connection (open), in central locking system wiring harness
(W9) – Plus connection (30), in rear wiring harness

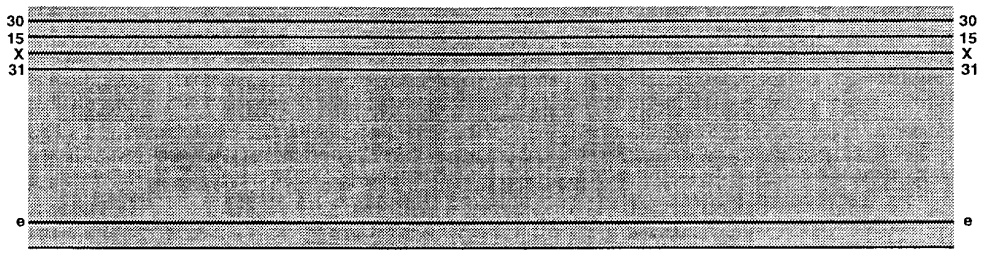

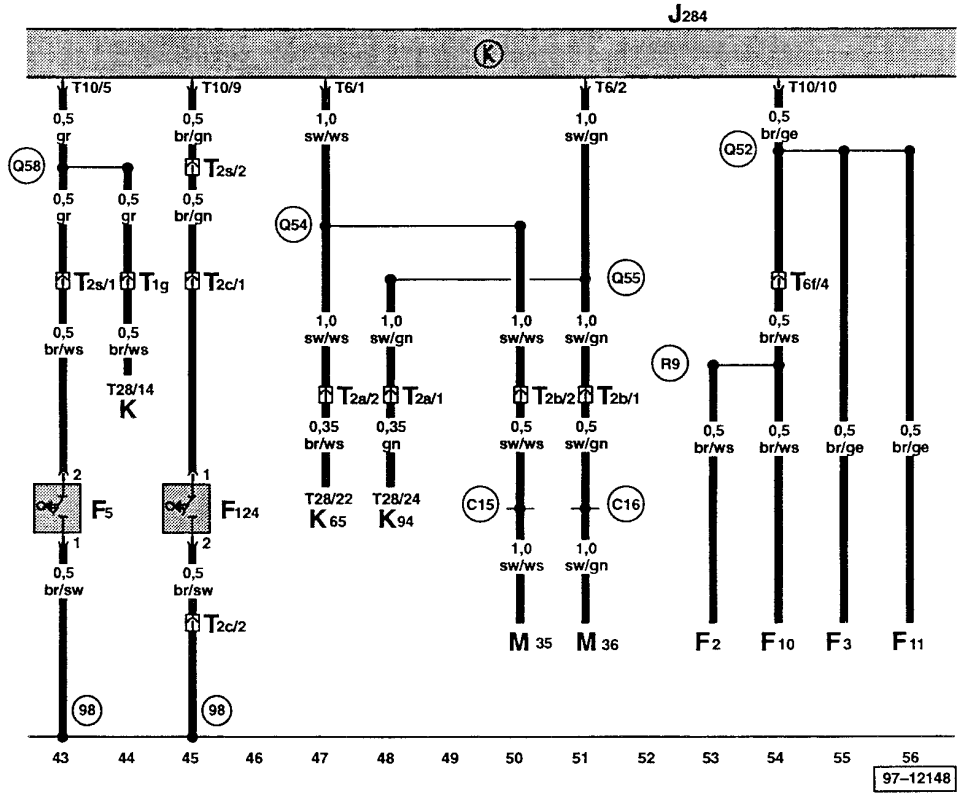

ws = white
sw = black
ro = red
br = brown
gn = green
bl = blue
gr = grey
li = violet
ge = yellow

F2 – Door Contact Switch – Driver's Side
F3 – Door Contact Switch – Passenger's Side
F5 – Luggage Compartment Light Switch
F10 – Left Rear Door Contact Switch
F11 – Right Rear Door Contact Switch
F124 – Trunk Lock Alarm Switch
J284 – Alarm System Control Module
K – Instrument Cluster
K65 – Left Turn Signal Indicator Light
K94 – Right Turn Signal Indicator Light
M35 – Left Front Turn Signal and Side Marker Light
M36 – Right Front Turn Signal and Side Marker Light
T1g – Single Connector, behind fuse/relay panel
T2a – Double Connector, behind fuse/relay panel
T2b – Double Connector, behind fuse/relay panel
T2c – Double Connector, in rear lid
T2s – Double Connector, in luggage compartment, left
T6 – 6-Pin Connector
T10 – 10-Pin Connector
T28 – 28-Pin Connector, on instrument cluster
98 – Ground connection, in rear lid wiring harness
C15 – Wire connection –1–, in headlight wiring harness
C16 – Wire connection –2–, in headlight wiring harness
Q52 – Wire connection (door contact switch), in alarm system wiring harness
Q54 – Wire connection (left turn signal), in alarm system wiring harness
Q55 – Wire connection (right turn signal), in alarm system wiring harness
Q58 – Wire connection (luggage compartment switch), in alarm system wiring harness
R9 – Wire connection (door contact switch), in rear door wiring harness

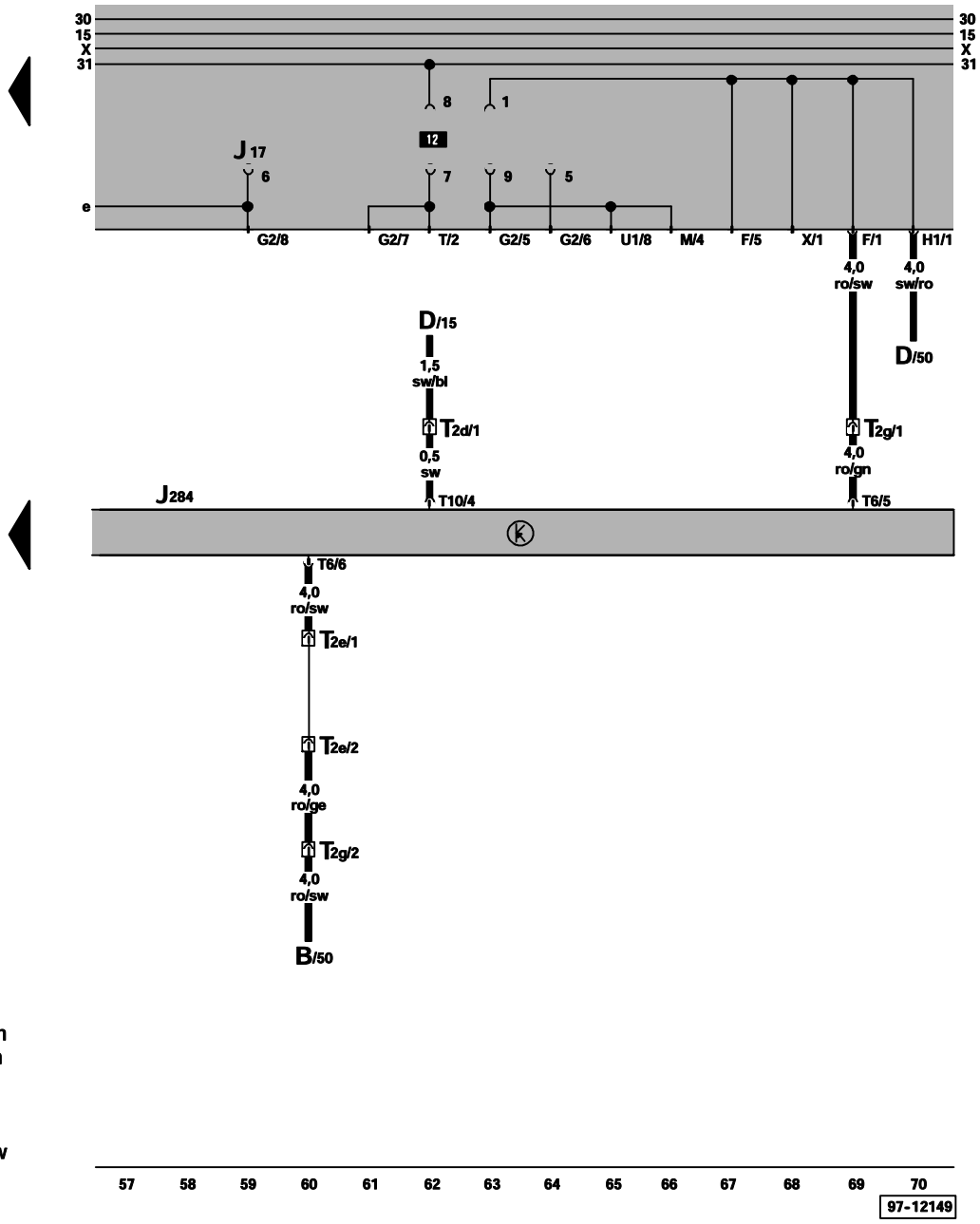

ws = white
sw = black
ro = red
br = brown
gn = green
bl = blue
gr = grey
li = violet
ge = yellow

B – Starter
D – Ignition/Starter Switch
J17 – Fuel Pump (FP) Relay
J284 – Alarm System Control Module, behind instrument panel, left, above fuse/relay panel
T2d – Double Connector, behind fuse/relay panel
T2e – Double Connector, behind fuse/relay panel
T2g – Double Connector, behind fuse/relay panel
T6 – 6-Pin Connector
T10 – 10-Pin Connector

Power sunroof,

from August 1994

Relay location
For relay location and multiple connectors see also section "component locations".

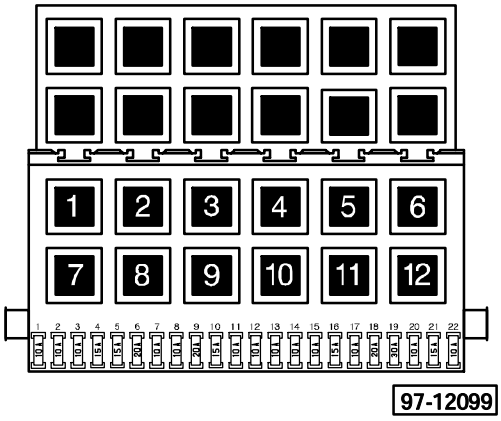

Fuse colors

30A – green
25A – white
20A – yellow
15A – blue
10A – red

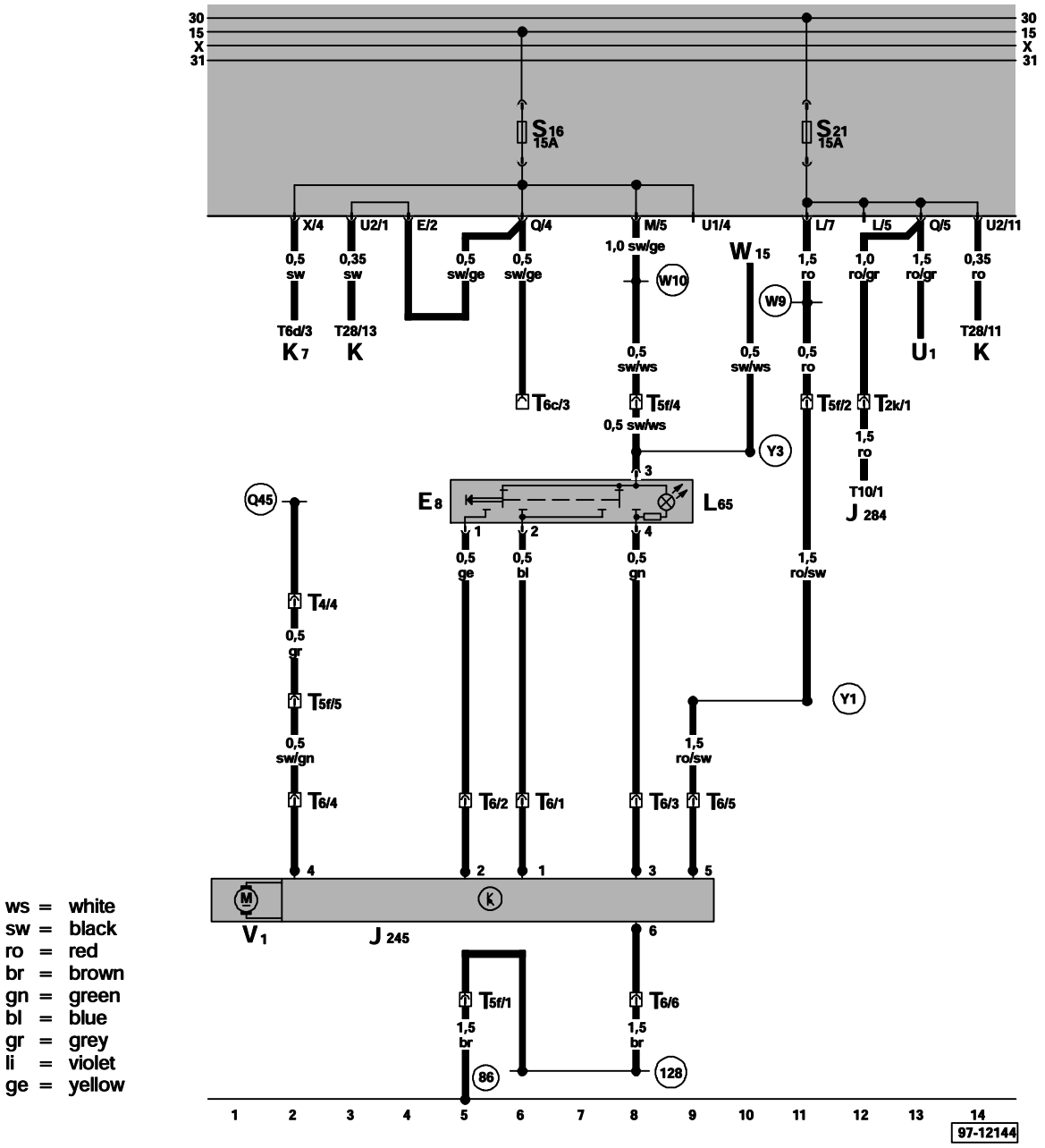

ws = white
sw = black
ro = red
br = brown
gn = green
bl = blue
gr = grey
li = violet
ge = yellow

E8 – Sunroof Switch
J245 – Power Sunroof Control Module
J284 – Alarm System Control Module
K – Instrument Cluster
K7 – Brake and Parking Brake Warning Light
L65 – Sunroof Switch Light
T2k – Double Connector, behind fuse/relay panel
T4 – 4-Pin Connector, below rear seat bench
T5f – 5-Pin Connector, behind fuse/relay panel
T6 – 6-Pin Connector, near interior light
T6c – 6-Pin Connector, behind fuse/relay panel
T6d – 6-Pin Connector, on Brake and Parking Brake Warning Light
T10 – 10-Pin Connector, on Alarm System Control Module
T28 – 28-Pin Connector, on instrument cluster
U1 – Cigarette Lighter
V1 – Sunroof Motor

W15 – Interior Light With Delay Switch
86 – Ground connection –1–, in rear wiring harness
128 – Ground connection –1–, in interior light wiring harness
Q45 – Wire connection (comfort), in power window wiring harness
W9 – Plus connection (30), in rear wiring harness
W10 – Plus connection (15), in rear wiring harness
Y1 – Plus connection (30), in interior light wiring harness
Y3 – Plus connection (15), in interior light/sunroof wiring harness

1.9L-Engine – Turbo Diesel Fuel In ection (DFI)/55kW, code AA ,

from August 1994

Relay location
For relay location and multiple connectors see also section "component locations".

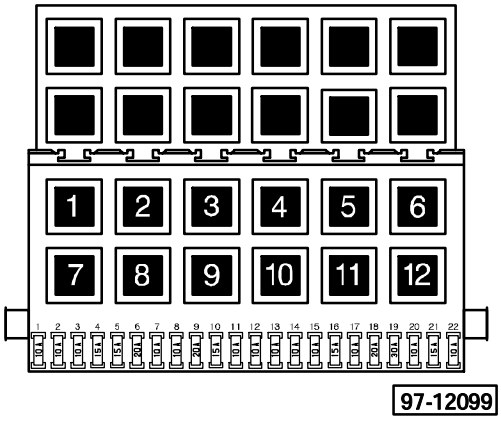

12 – Glow Plug Relay (104)

Note: Number in parentheses indicates production control number stamped on relay housing.

Fuse colors

30A – green
25A – white
20A – yellow
15A – blue
10A – red

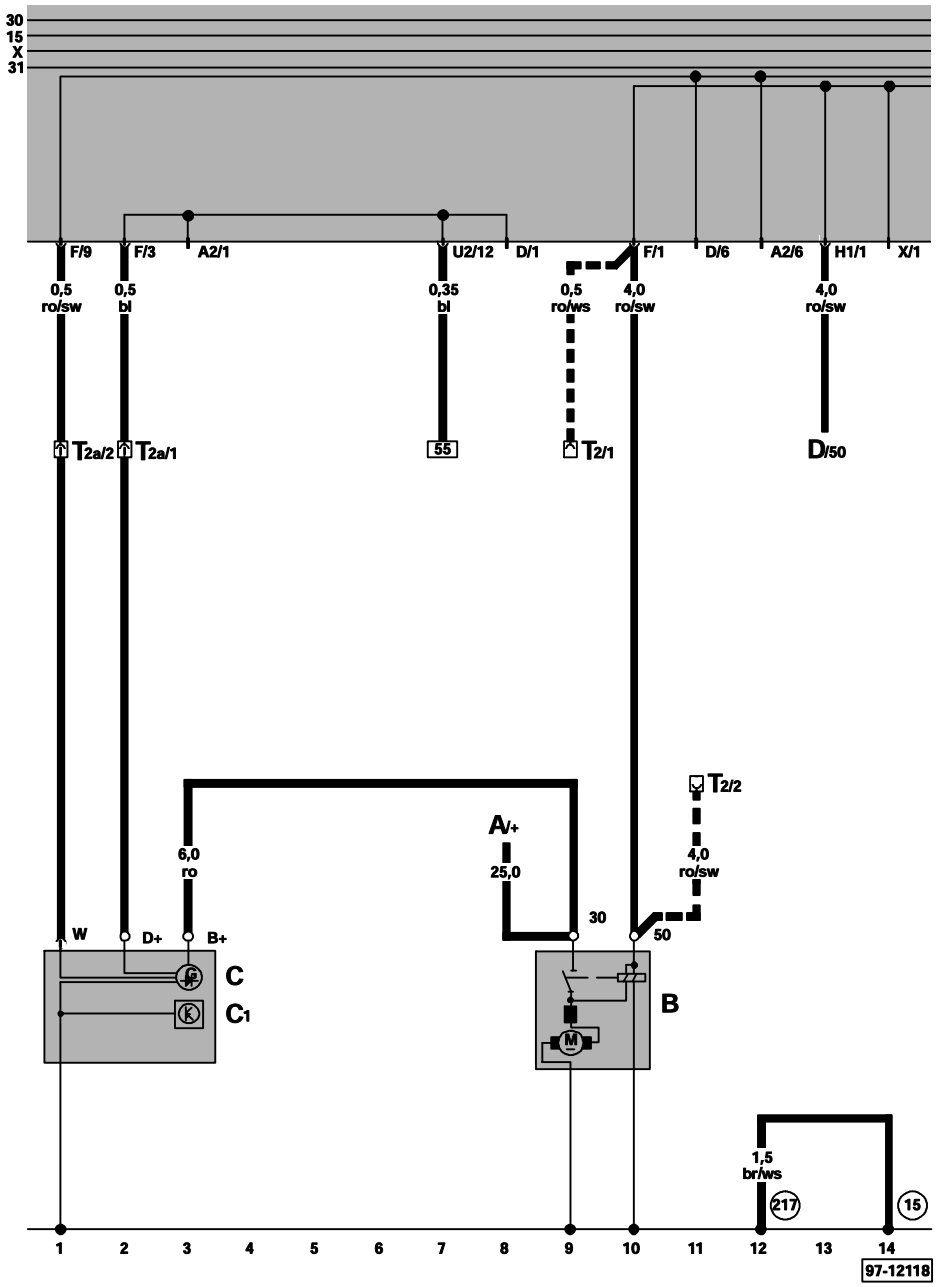

ws = white
sw = black
ro = red
br = brown
gn = green
bl = blue
gr = grey
li = violet
ge = yellow

A – Battery
B – Starter
C – Generator (GEN)
C1 – Voltage Regulator (VR)
D – Ignition/Starter Switch
T2 – Double Connector, behind fuse/relay panel
T2a – Double Connector, near battery

(15) – Ground connection, on cylinder head

(217) – Ground connnection -1-, in glow plug system wiring harness

▬▬ – Automatic transmission only

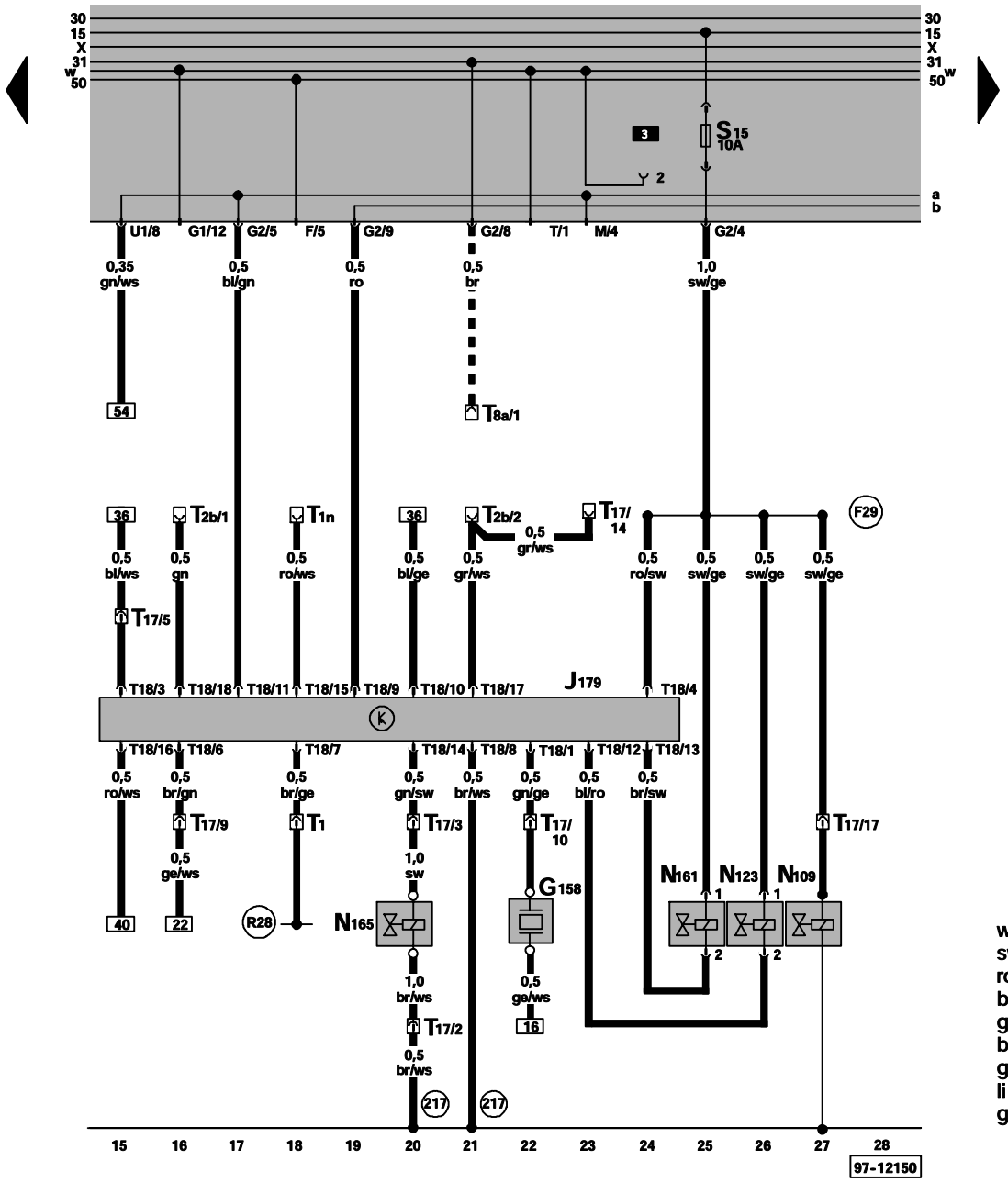

ws = white
sw = black
ro = red
br = brown
gn = green
bl = blue
gr = grey
li = violet
ge = yellow

G158 – Injection Start Sensor (01055)
J179 – Automatic Glow Time Control Module (01267–4112), behind instrument panel, left
N109 – Fuel Cut-Off Valve (01237–4321)
N123 – Idle Air Control (IAC) Solenoid
N161 – Two-Way Valve for EGR (00314–1424)
N165 – Injection Start Positioner
T1 – Single Connector, behind fuse/relay panel
T1n – Single Connector, behind fuse/relay panel, A/C connection
T2b – Double Connector, behind console, on board diagnostic (OBD) connection
T2n – Double Connector; behind fuse/relay panel, A/C connection
T8a – 8-Pin Connector, behind fuse/relay panel
T17 – 17-Pin Connector, on left cylinder head
T18 – 18-Pin Connector

(217) – Ground connnection –1–, in glow plug system wiring harness

(F29) – Wire Connection (15a), in glow plug system wiring harness

(R28) – Wire connection –2– (door contact switch), in rear wiring harness

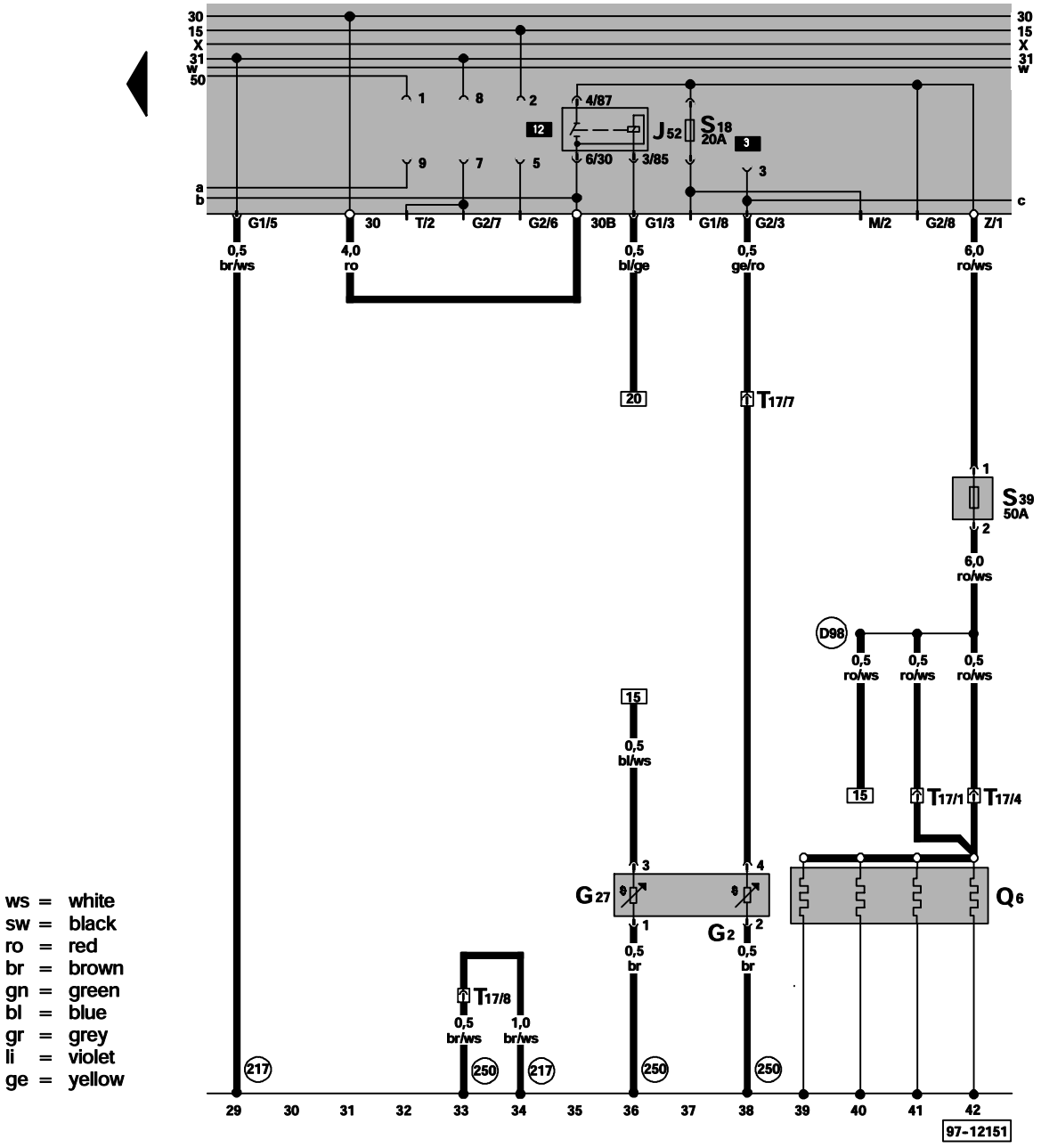

ws = white
sw = black
ro = red
br = brown
gn = green
bl = blue
gr = grey
li = violet
ge = yellow

G2 – Engine Coolant Temperature (ECT) Sensor (01039)
G27 – Engine Temperature Sensor
J52 – Glow Plug Relay (01266–4111)
Q6 – Spark Plugs (Engine)
S39 – Engine Glow Plug Fuse Strip
T17 – 17-Pin Connector, on left cylinder head

(217) – Ground connnection –1–, in glow plug system wiring harness

(250) – Ground connection, in Diesel prewiring wiring harness

(D98) – Wire connection (glow plugs), in engine compartment wiring harness

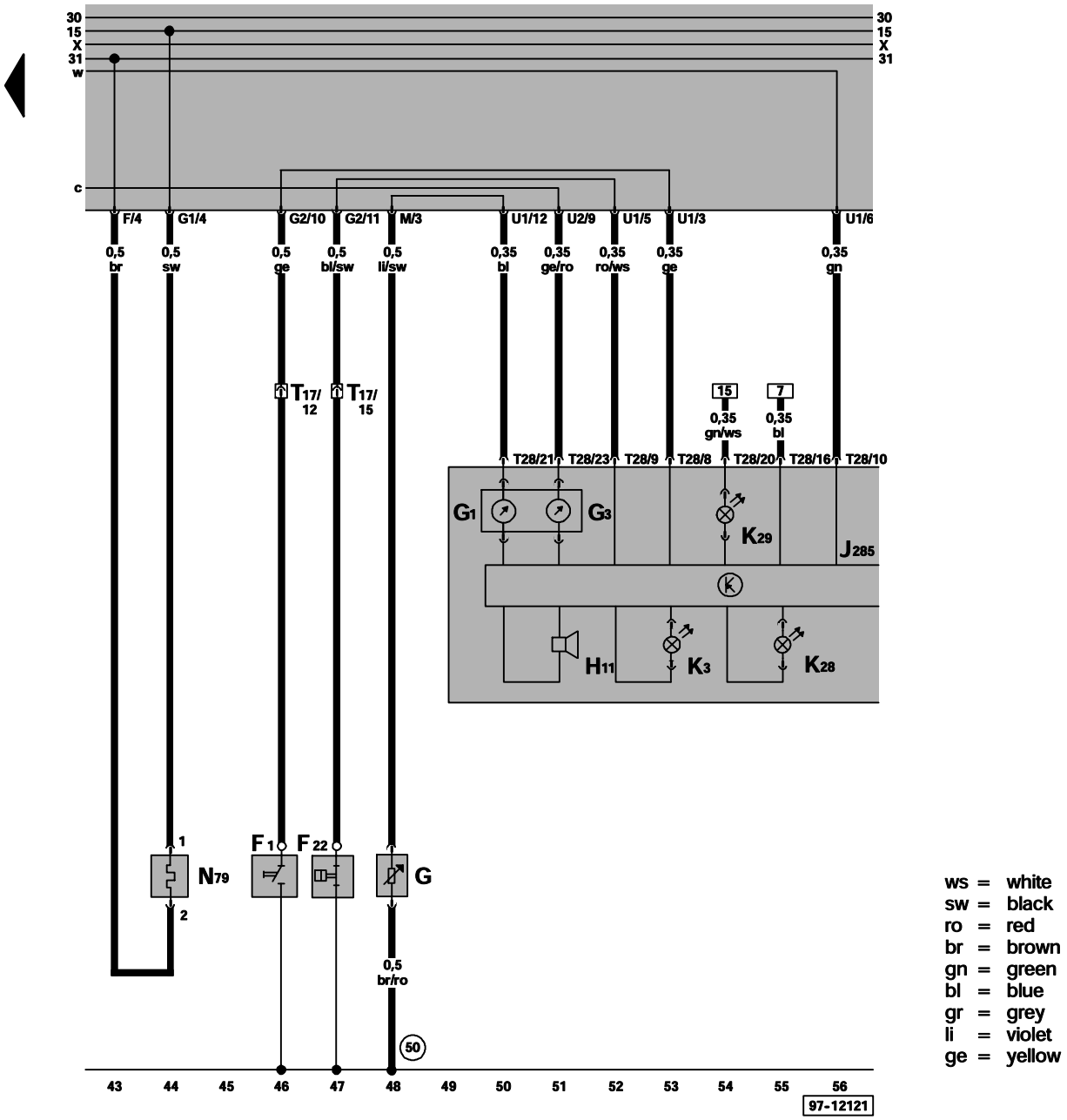

ws = white
sw = black
ro = red
br = brown
gn = green
bl = blue
gr = grey
li = violet
ge = yellow

F1 – Oil Pressure Switch*
F22 – 0.3 Bar Oil Pressure Switch (00772–3114)
G – Fuel Level Sensor (00771–3113)
G1 – Fuel Gauge
G3 – Engine Coolant Temperature (ECT) Gauge
H11 – Oil Pressure Warning Buzzer
J285 – Control Module With Display Unit In Instrument Cluster
K3 – Oil Pressure Warning Light (00755)
K28 – Engine Coolant Level/Temperature (ECL/ECT) Warning Light
K29 – Glow Plug Indicator Light (00626)
N79 – Positive Crankcase Ventilation (PCV) Heating Element

T17 – 17-Pin Connector, on left cylinder head
T28 – 28-Pin Connector, on instrument cluster

(50) – Ground connection, in luggage compartment, left

* – Switch levels see Repair Manual Passat 1994 " Engine

Airbag,

from ctober 1994

Relay location
For relay location and multiple connectors see also section "component locations".

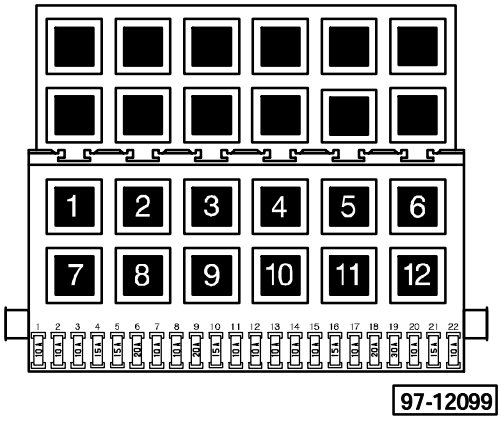

Fuse colors

30A – green
25A – white
20A – yellow
15A – blue
10A – red

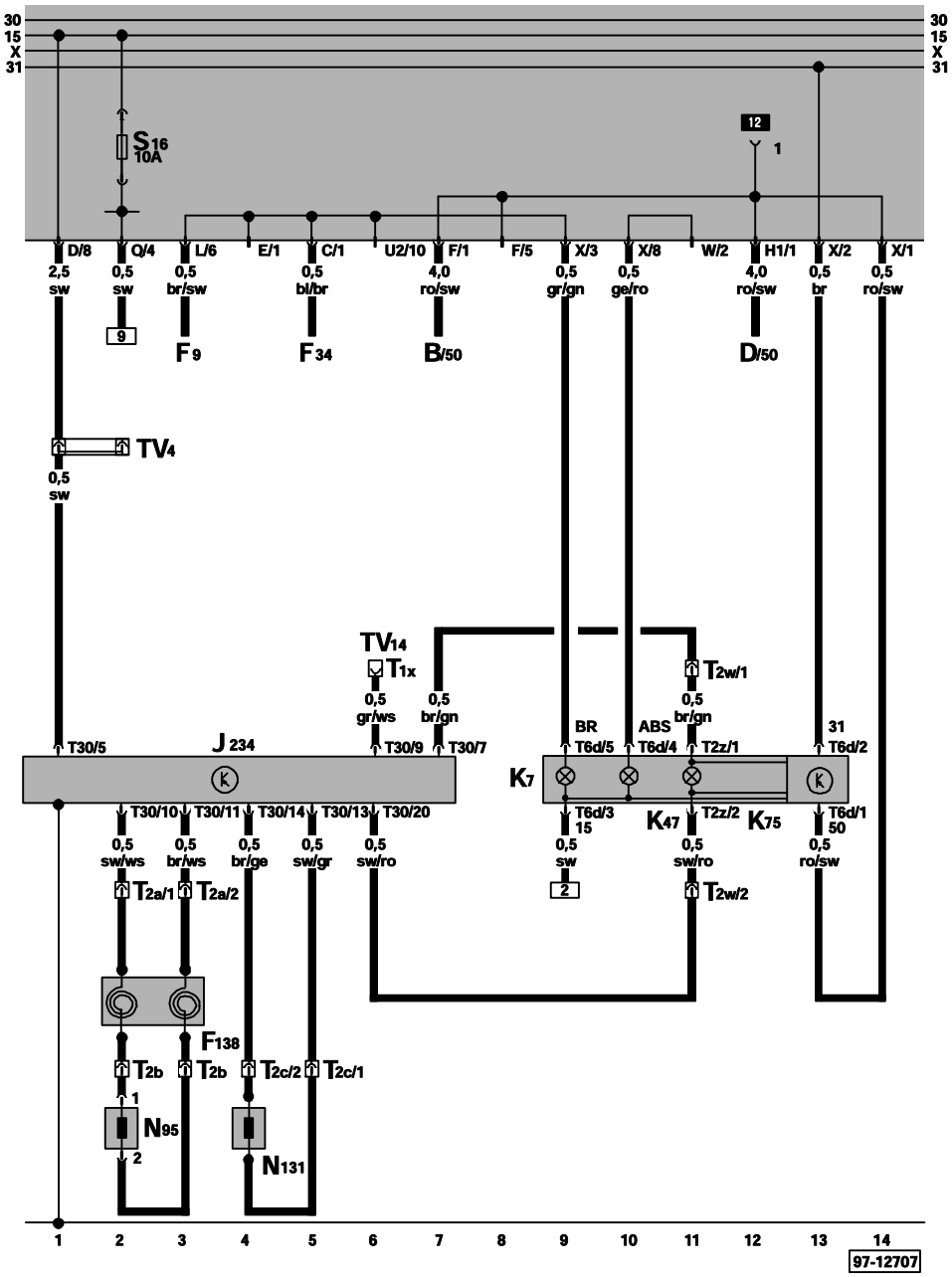

ws = white
sw = black
ro = red
br = brown
gn = green
bl = blue
gr = grey
li = violet
ge = yellow

B – Starter
D – Ignition/Starter Switch
F9 – Parking Brake Warning Light Switch (01114)
F34 – Brake Fluid Level Warning Switch
F138 – Airbag Spiral Spring/Return Spring With Slip Ring
J234 – Airbag Control Module, behind console
K7 – Brake and Parking Brake Warning Light
K47 – ABS Warning Light
K75 – Airbag Malfunction Indicator Lamp (MIL)
N95 – Driver's Side Airbag Igniter (00588)
N131 – Passenger's Side Airbag Igniter 1 (00589)
T1x – Single Connector, on Data Link Connector (DLC) Wire Connector
T2a – Double Connector, behind steering column switch cover
T2b – Double Connector, in steering wheel
T2c – Double Connector, behind instrument panel, right
T2w – Double Connector, behind fuse/relay panel
T2z – Double Connector
T6d – 6-Pin Connector
T30 – 30-Pin Connector
TV14 – Data Link Connector (DLC) Wire Connector, behind console

Automatic transmission,
D 2.8L-Engine – Motronic Multiport Fuel In ection (MFI)/128kW, code AAA,

from August 1994

Relay location
For relay location and multiple connectors see also section "component locations".

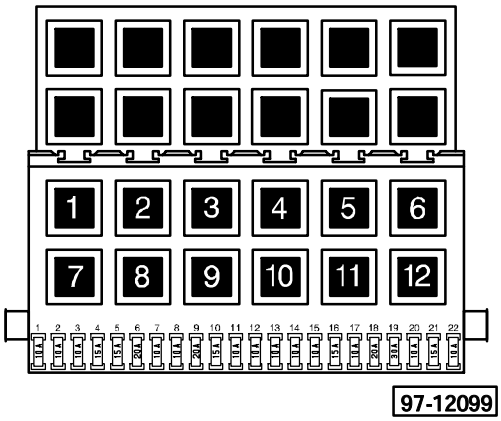

Fuse colors

30A – green
25A – white
20A – yellow
15A – blue
10A – red

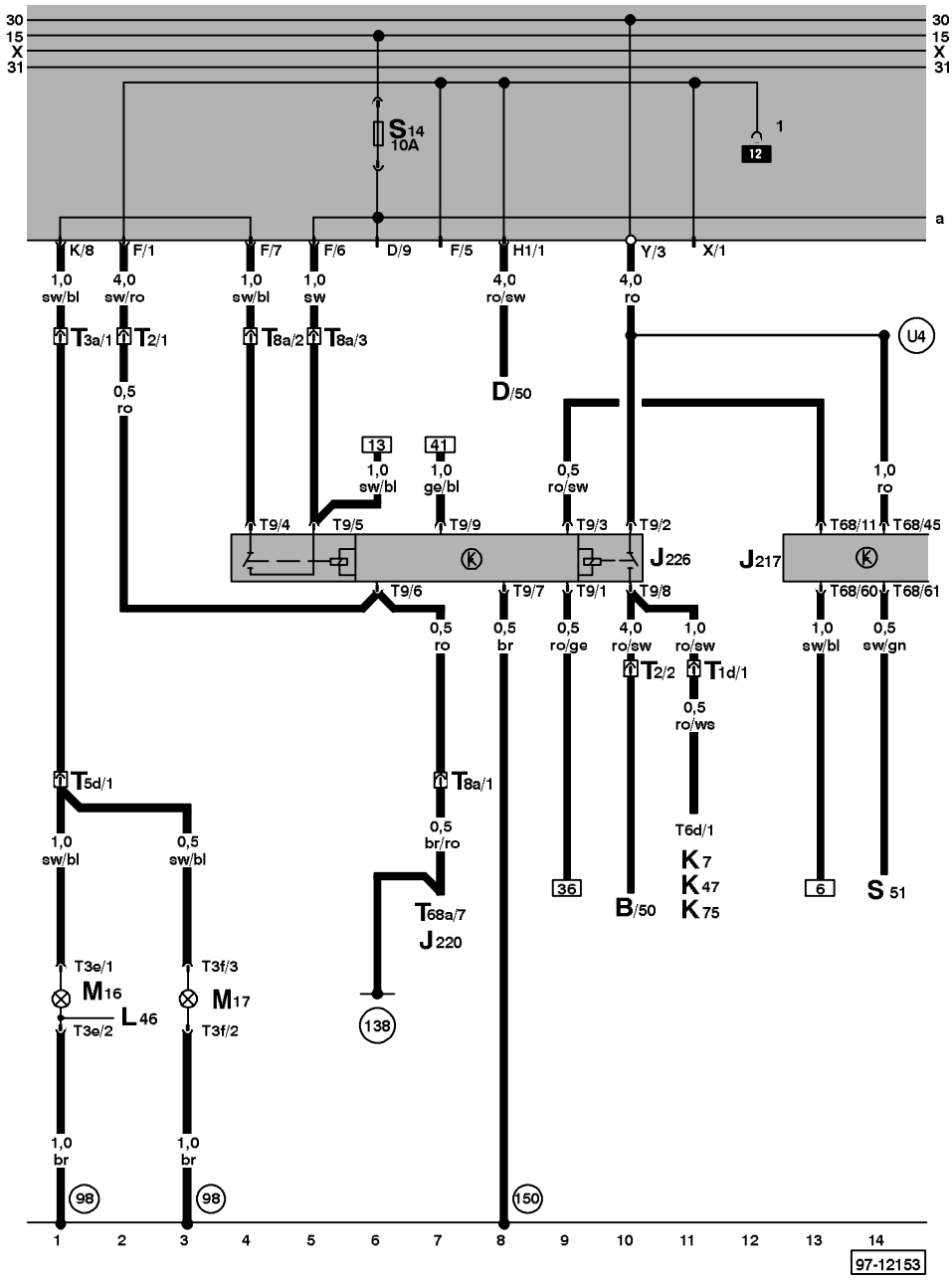

ws = white
sw = black
ro = red
br = brown
gn = green
bl = blue
gr = grey
li = violet
ge = yellow

D – Ignition/Starter Switch
J217 – Transmission Control Module (TCM), below rear seat bench
J220 – Motronic Engine Control Module (ECM)
J226 – Park/Neutral Position (PNP) Relay, behind instrument panel, left
K7 – Brake and Parking Brake Warning Light
K47 – ABS Warning Light
K75 – Airbag Malfunction Indicator Light (MIL)
L46 – Left Rear Fog Light
M16 – Left Back-Up Light
M17 – Right Back-Up Light
S51 – Fuse for cruise control, on auxiliary relay panel
T1d – Single Connector, behind fuse/relay panel
T2 – Double Connector, behind fuse/relay panel
T3a – 3-Pin Connector, in luggage compartment, left
T3e – 3-Pin Connector
T3f – 3-Pin Connector
T5d – 5-Pin Connector, in rear lid
T6d – 6-Pin Connector
T8a – 8-Pin Connector, behind fuse/relay panel
T9 – 9-Pin Connector
T68 – 68-Pin Connector
T68a – 68-Pin Connector, on Motronic Engine Control Module (ECM)

98 – Ground connection, in rear lid wiring harness
138 – Ground connection (control module), in Motronic Multiport Fuel Injection (MFI) wiring harness
150 – Ground connection, in automatic transmission wiring harness
U4 – Wire connection (30), in automatic transmission wiring harness

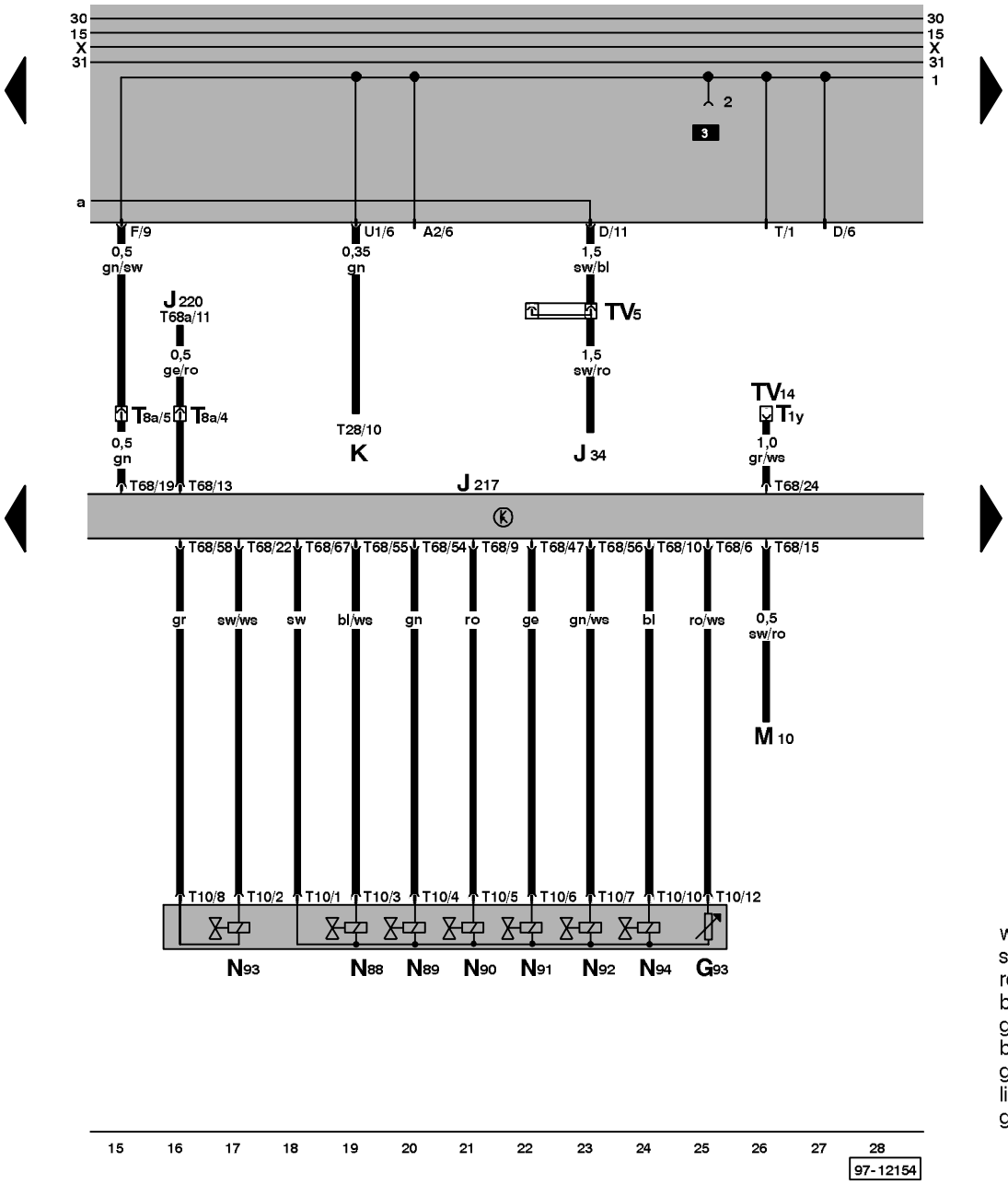

ws = white
sw = black
ro = red
br = brown
gn = green
bl = blue
gr = grey
li = violet
ge = yellow

G93 – Transmission Fluid Temperature Sensor (00300–1333)
J34 – Seat Belt Warning System Relay
J217 – Transmission Control Module (TCM), below rear seat bench
J220 – Motronic Engine Control Module (ECM)
K – Instrument Cluster
M10 – Right Brake Light
N88 – Solenoid Valve 1 (00258–1113)
N89 – Solenoid Valve 2 (00260–1121)
N90 – Solenoid Valve 3 (00262–1123)
N91 – Solenoid Valve 4 (00264–1131)
N92 – Solenoid Valve 5 (00266–1133)
N93 – Solenoid Valve 6 (00268–1141)
N94 – Solenoid Valve 7 (00270–1143)
T1y – Single Connector, on Data Link Connector (DLC) Wire Connector
T8a – 8-Pin Connector, behind fuse/relay panel
T10 – 10-Pin Connector
T28 – 28-Pin Connector, on instrument cluster
T68 – 68-Pin Connector
T68a – 68-Pin Connector, on Motronic Engine Control Module (ECM)
TV5 – Terminal 15a Wire Connector, above fuse/relay panel
TV14 – Data Link Connector (DLC) Wire Connector, behind console

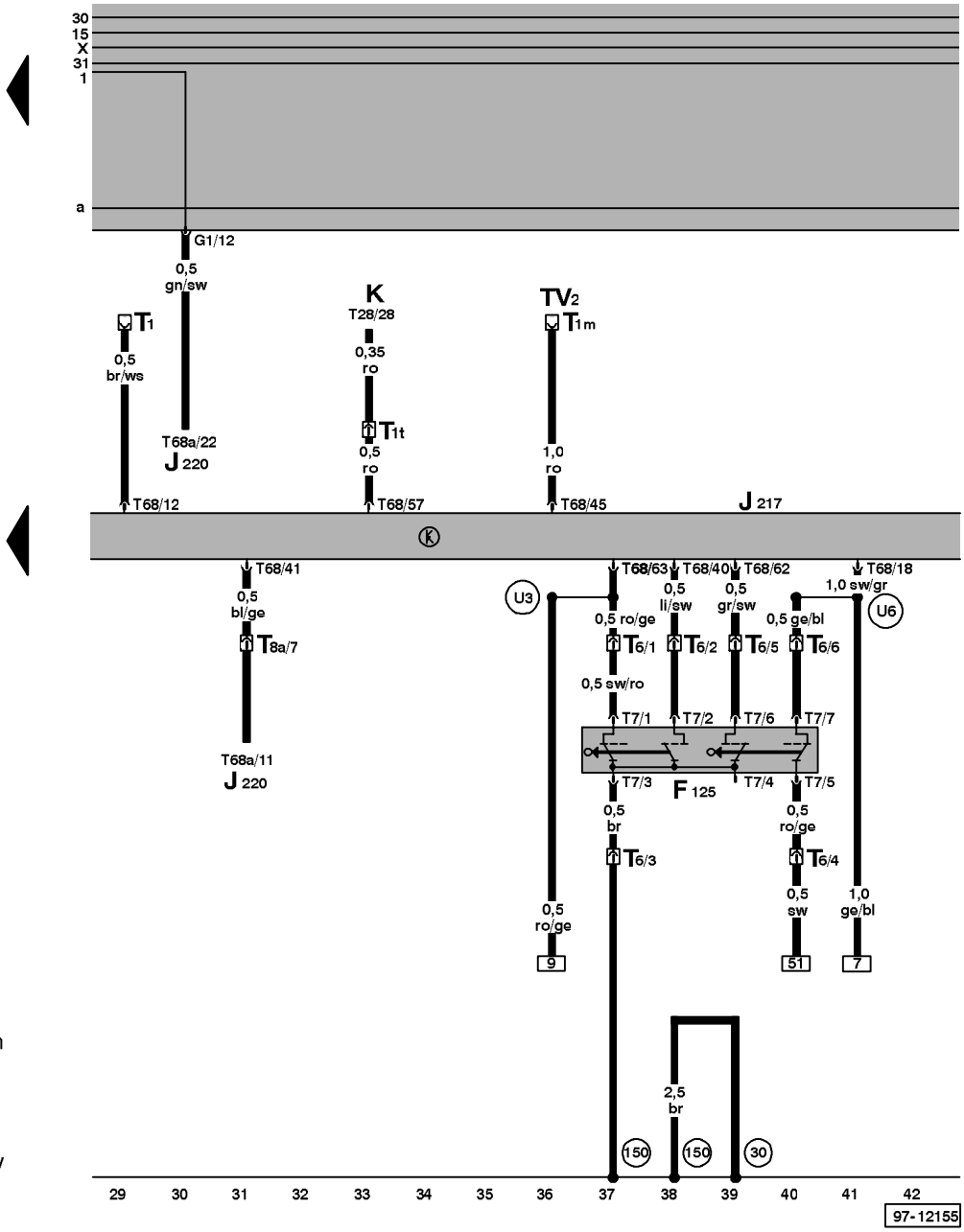

ws = white
sw = black
ro = red
br = brown
gn = green
bl = blue
gr = grey
li = violet
ge = yellow

F125 – Multi-Function Transmission Range (TR) Switch (00293–1314)
J217 – Transmission Control Module (TCM), below rear seat bench
J220 – Motronic Engine Control Module (ECM)
K – Instrument Cluster
T1 – Single Connector, behind fuse/relay panel, A/C connection
T1m – Single Connector, behind fuse/relay panel, on Terminal 30 (B+) Wire Connector
T1t – Single Connector, behind fuse/relay panel, connection for Transmission Range (TR) Selector Lever Display
T6 – 6-Pin Connector, in engine compartment, left
T7 – 7-Pin Connector
T8a – 8-Pin Connector, behind fuse/relay panel
T28 – 28-Pin Connector, on instrument cluster
T68 – 68-Pin Connector
T68a – 68-Pin Connector, on Motronic Engine Control Module (ECM)
TV2 – Terminal 30 (B+) Wire Connector, behind fuse/relay panel
(30) – Ground connection, –1–, beside fuse/relay panel
(150) – Ground connection, in automatic transmission wiring harness
(U3) – Wire connection, in automatic transmission wiring harness
(U6) – Wire connection, in automatic transmission wiring harness

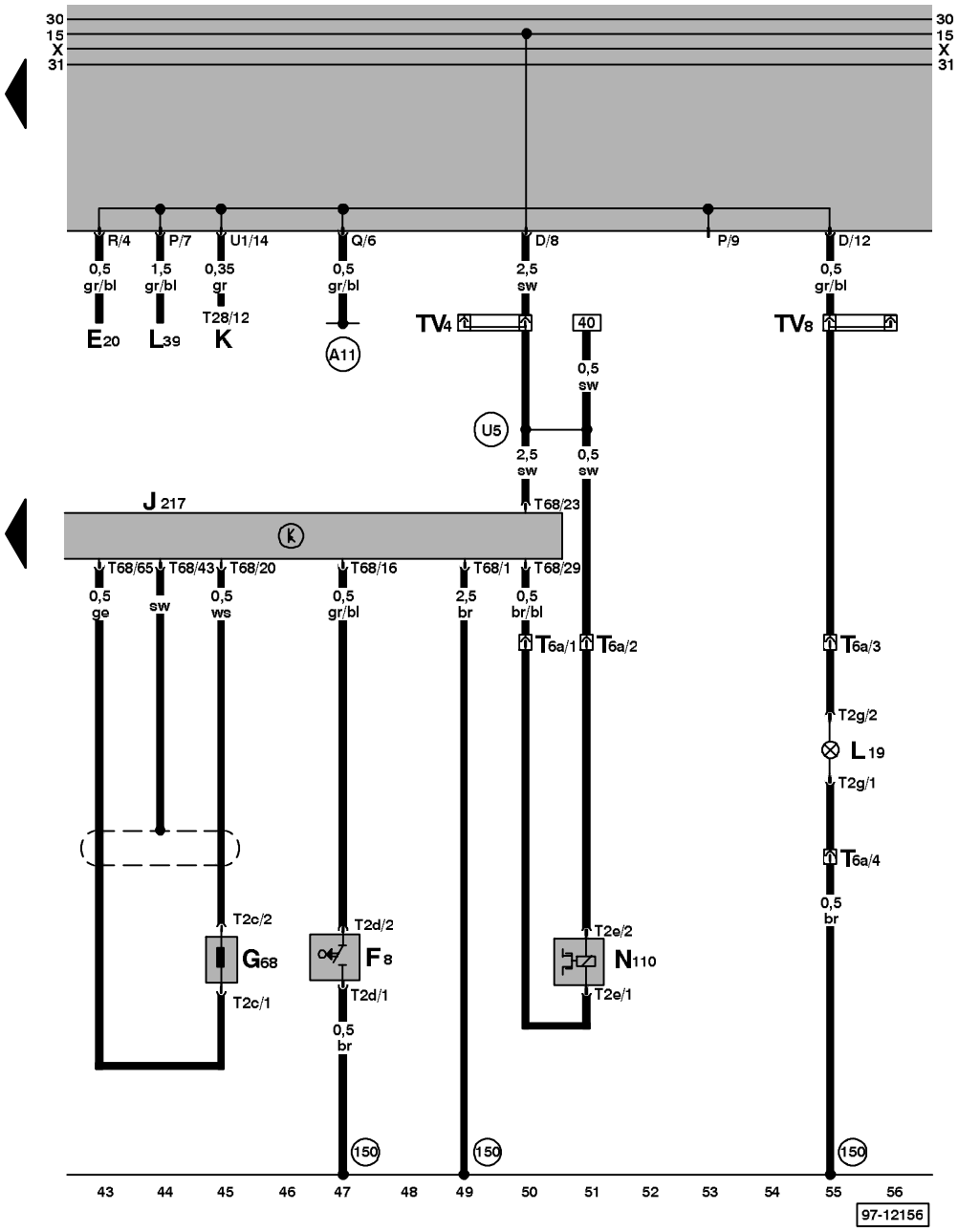

ws = white
sw = black
ro = red
br = brown
gn = green
bl = blue
gr = grey
li = violet
ge = yellow

E20 – Instrument Panel Light Dimmer Switch
F8 – Kick Down Switch
G68 – Vehicle Speed Sensor (VSS) (00281 – 1231)
J217 – Transmission Control Module (TCM), below rear seat bench
K – Instrument Cluster
L19 – Automatic Transmission Console Light
L39 – Rear Window Defogger Switch Light
N110 – Shift Lock Solenoid (01236 – 4314)
T2c – Double Connector
T2d – Double Connector
T2e – Double Connector
T2g – Double Connector
T6a – 6-Pin Connector, near gearshift lever
T28 – 28-Pin Connector, on instrument cluster
T68 – 68-Pin Connector
TV4 – Terminal 15 Wire Connector, above fuse/relay panel
TV8 – Terminal 58b Wire Connector, above fuse/relay panel

(150) – Ground connection, in automatic transmission wiring harness

(A11) – Plus connection (58b) in instrument panel wiring harness

(U5) – Wire connection –2– (15), in automatic transmission wiring harness

Stereo radio with CD-changer and eight speakers,

from August 1994

Relay location
For relay location and multiple connectors see also section "component locations".

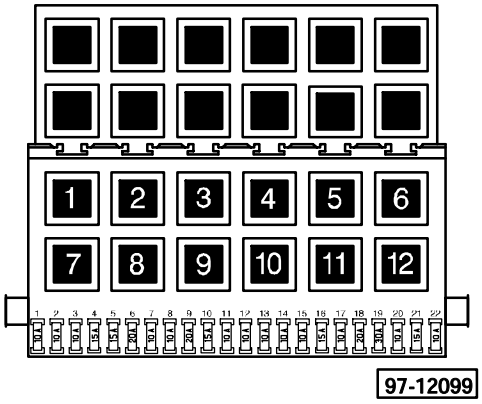

Fuse colors

30A – green
25A – white
20A – yellow
15A – blue
10A – red

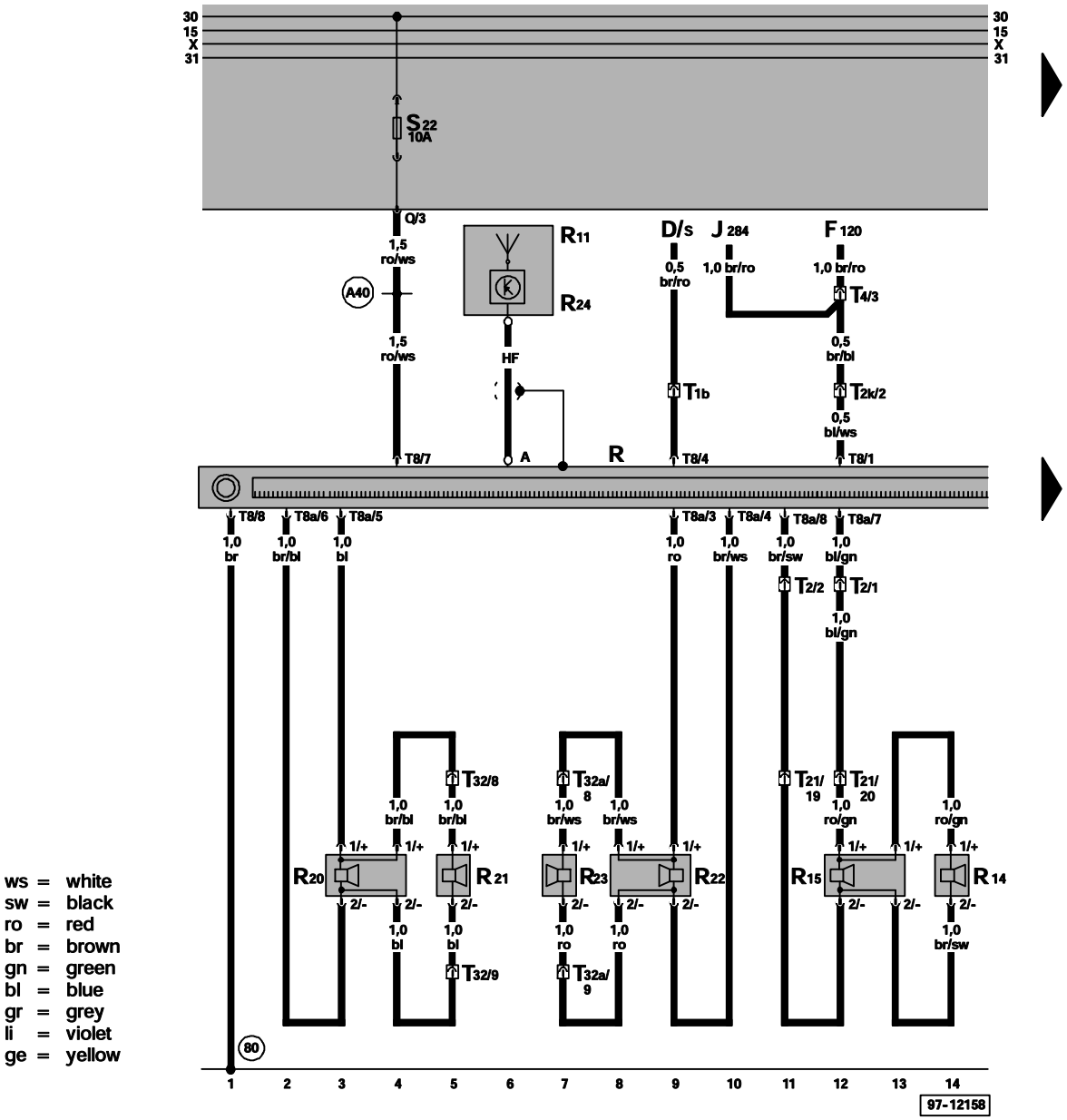

ws = white
sw = black
ro = red
br = brown
gn = green
bl = blue
gr = grey
li = violet
ge = yellow

D – Ignition/Starter Switch
F120 – Hood Alarm Switch
J284 – Alarm System Control Module
R – Radio
R11 – Antenna
R14 – Left Rear Tweeter, in door
R15 – Left Rear Woofer, in door
R20 – Left Front Tweeter, in instrument panel
R21 – Left Front Woofer, in driver's door
R22 – Right Front Tweeter, in instrument panel
R23 – Right Front Woofer, in passenger's door
R24 – Antenna Amplifier
T1b – Single Connector, behind fuse/relay panel
T2 – Double Connector, behind fuse/relay panel
T2k – Double Connector, behind fuse/relay panel
T4 – 4-Pin Connector, behind fuse/relay panel
T8 – 8-Pin Connector, on radio
T8a – 8-Pin Connector, on radio
T21 – 21-Pin Connector, behind left B-pillar trim, lower part
T32 – 32-Pin Connector, on left A-pillar, lower part
T32a – 32-Pin Connector, on right A-pillar, lower part

(80) – Ground connection –1–, in instrument panel wiring harness

(A40) – Plus connection (30), in instrument panel wiring harness

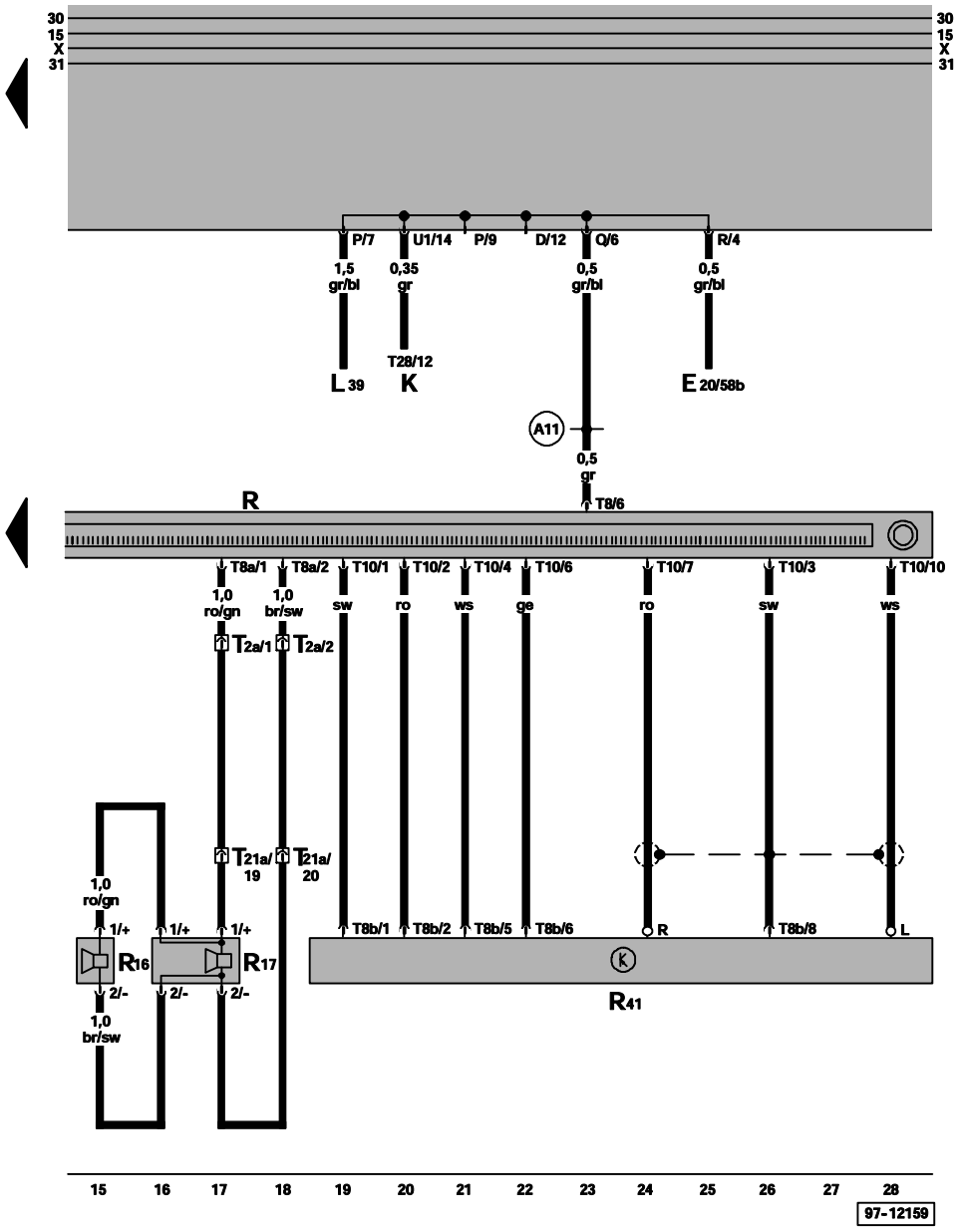

ws = white
sw = black
ro = red
br = brown
gn = green
bl = blue
gr = grey
li = violet
ge = yellow

E20 – Instrument Panel Light Dimmer Switch
K – Instrument Cluster
L39 – Rear Window Defogger Switch Light
R – Radio
R16 – Right Rear Tweeter, in door
R17 – Right Rear Woofer, in door
R41 – CD Changer Unit, in luggage compartment
T2a – Double Connector, behind fuse/relay panel
T8 – 8-Pin Connector, on radio
T8a – 8-Pin Connector, on radio
T8b – 8-Pin Connector, on CD changer Unit
T10 – 10-Pin Connector
T21 – 21-Pin Connector, behind right B-pillar trim, lower part
T28 – 28-Pin Connector, on instrument cluster
A11 – Plus connection (58b) in instrument panel wiring harness

Coolant fan, three speeds, 450W, code AAA,

from August 1994

Relay location
For relay location and multiple connectors see also section "component locations".

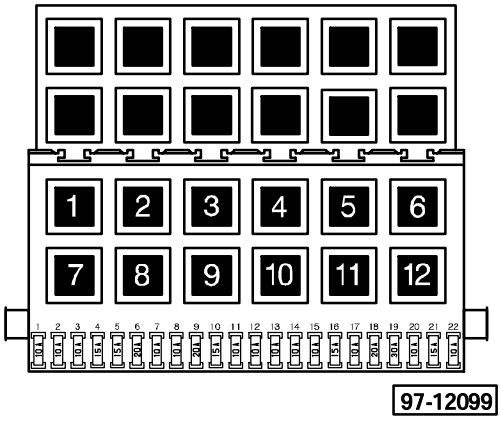

Fuse colors

30A – green
25A – white
20A – yellow
15A – blue
10A – red

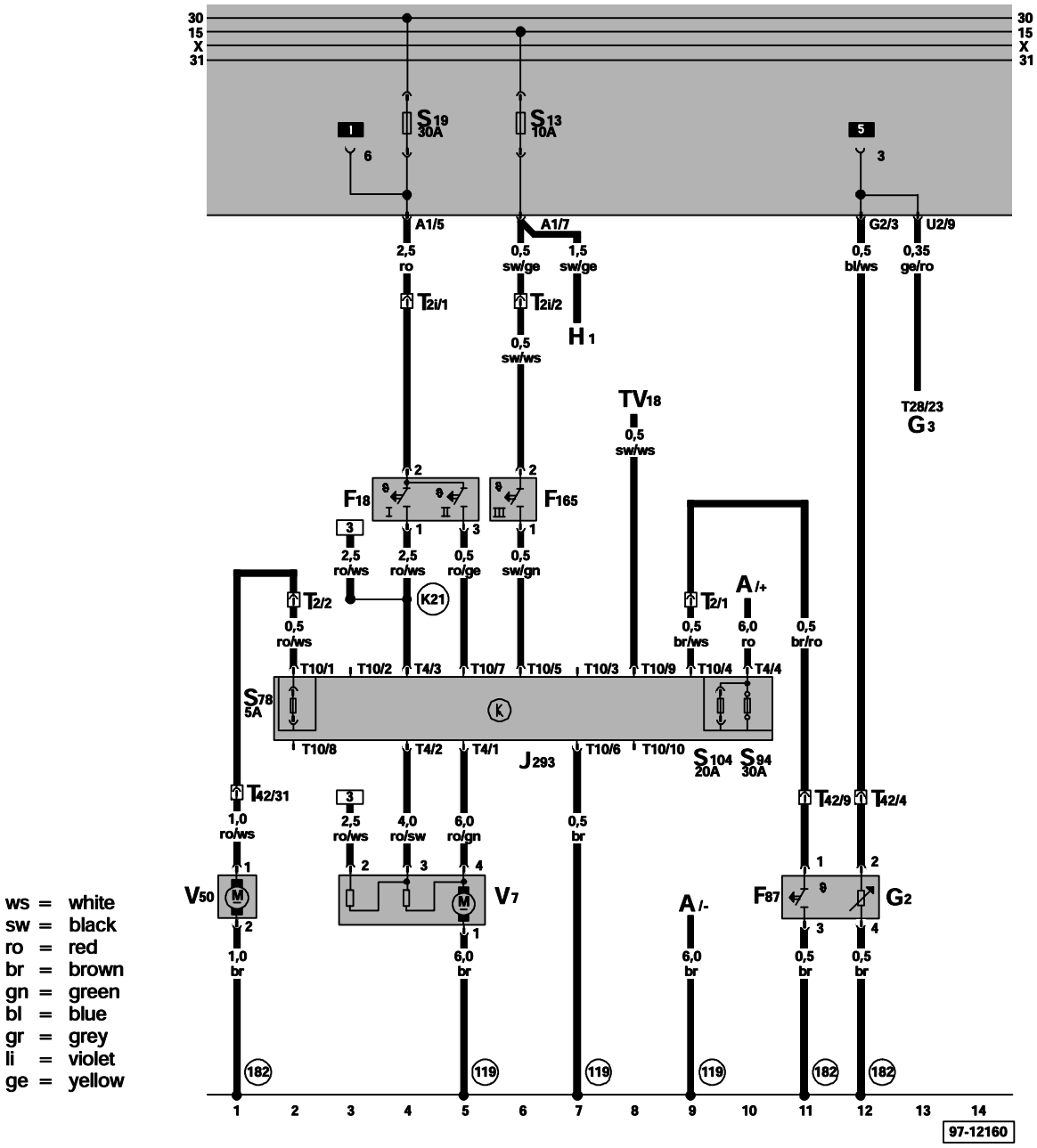

ws = white
sw = black
ro = red
br = brown
gn = green
bl = blue
gr = grey
li = violet
ge = yellow

A – Battery
F18 – Coolant Fan Control (FC) Thermal Switch*
F87 – After-Run Coolant Fan Control (FC) Thermal Switch*
F165 – Third Speed Coolant Fan Control (FC) Thermal Switch*
G2 – Engine Coolant Temperature (ECT) Sensor (01039)
G3 – Engine Coolant Temperature (ECT) Gauge
H1 – Dual Horns
J293 – Coolant FC (Fan Control) Control Module, in engine compartment, left
S78 – Engine Coolant Pump Fuse
S94 – Third Speed Coolant Fan Fuse
S104 – Second Speed Coolant Fan Fuse
T2 – Double Connector, behind fuse/relay panel
T2i – Double Connector, behind fuse/relay panel
T4 – 4-Pin Connector
T10 – 10-Pin Connector
T28 – 28-Pin Connector, on instrument cluster
T42 – 42-Pin Connector, on left cylinder head
TV18 – Distributor for Terminal Xa, above fuse/relay panel
V7 – Coolant Fan
V50 – Coolant Pump
119 – Ground connection –1–, in headlight wiring harness
182 – Ground connection –1–, in engine compartment wiring harness (6 Cylinder)
K21 – Wire connection –1–, in coolant fan wiring harness
* – Switch levels see Repair Manual Passat 1994 " Engine

Coolant fan, three speeds, 450W, code AA ,

from August 1994

Relay location
For relay location and multiple connectors see also section "component locations".

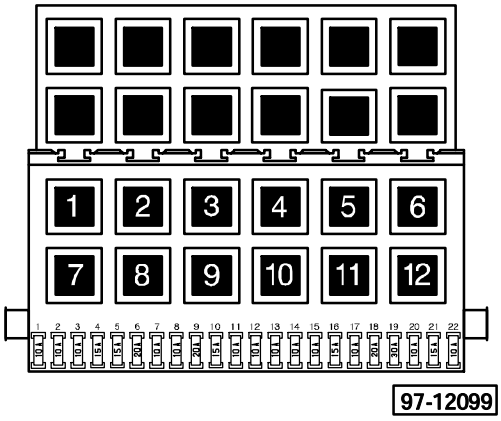

Fuse colors

30A – green
25A – white
20A – yellow
15A – blue
10A – red

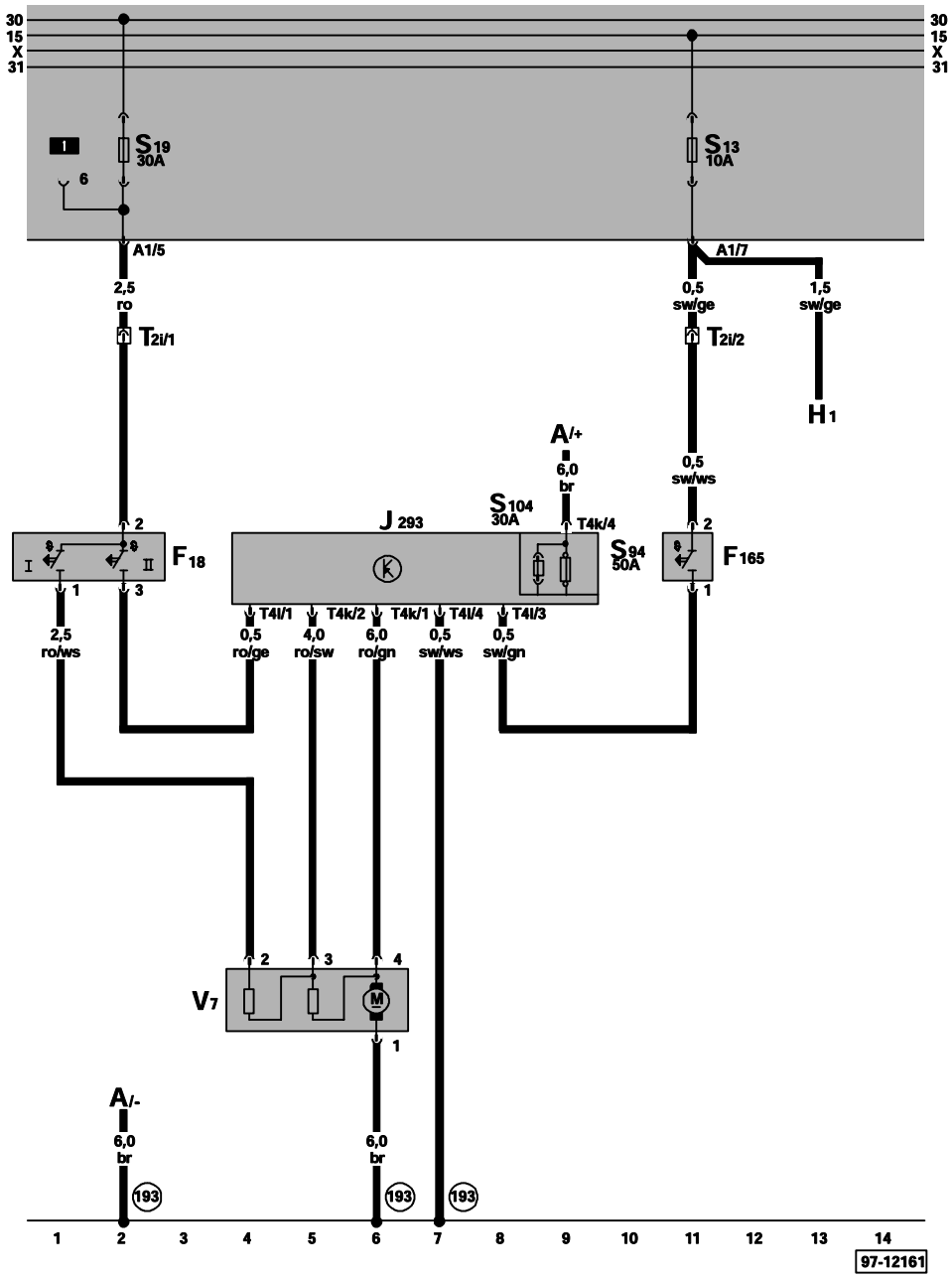

ws = white
sw = black
ro = red
br = brown
gn = green
bl = blue
gr = grey
li = violet
ge = yellow

A – Battery
F18 – Coolant Fan Control (FC) Thermal Switch
F165 – Third Speed Coolant Fan Control (FC) Thermal Switch
H1 – Dual Horns
J293 – Coolant FC (Fan Control) Control Module, in engine compartment, left
S94 – Third Speed Coolant Fan Fuse
S104 – Second Speed Coolant Fan Fuse
T2i – Double Connector, behind fuse/relay panel
T4k – 4-Pin Connector
T4l – 4-Pin Connector
V7 – Coolant Fan

(193) – Ground connection –1–, in coolant fan wiring harness

Daytime running lights, only Canada

from August 1994

Deviate relay location and fuseplacements as well as the locations of multiple connectors-see section "component locations"

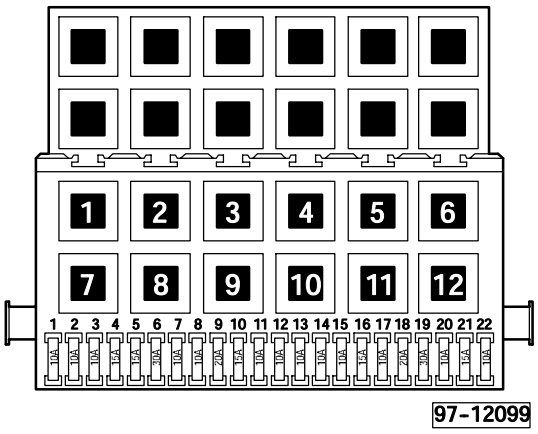

6 - Emergency Flasher Relay (21)

7 - Headlight Washer System Relay (33)

10 - Fog Light Relay (53)

Note:

Number in parentheses indicates production control number stamped on relay housing.

Fuse colors

30 A - green
25 A - white
20 A - yellow
15 A - blue
10 A - red
7,5 A - brown
5 A - beige
3 A - violet

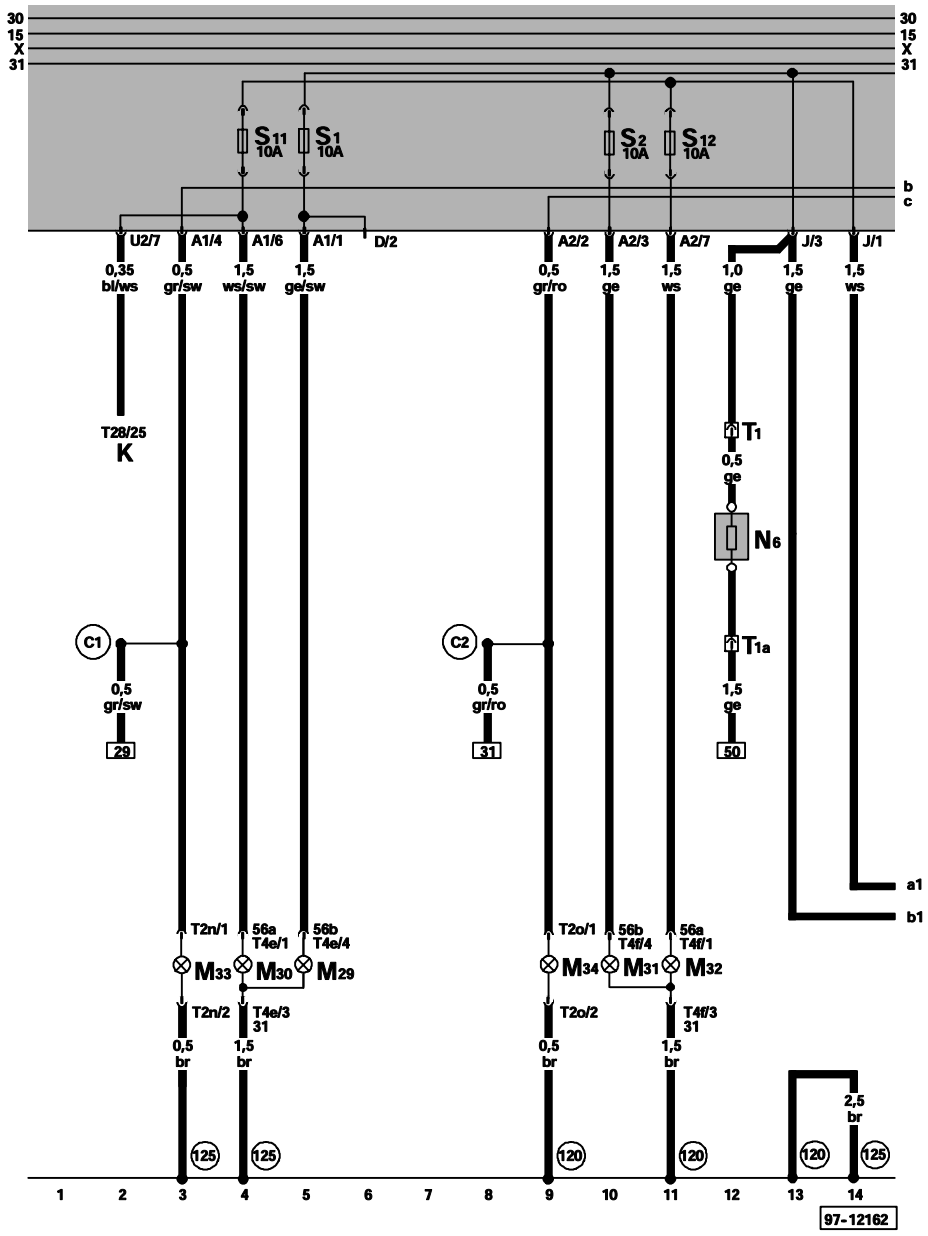

ws	white	
sw	black	
ro	red	
br	brown	
gn	green	
bl	blue	
gr	grey	
li	violet	
ge	yellow	

- Instrument Cluster
M29 - Left Low Beam Headlight
M30 - Left High Beam Headlight
M31 - Right Low Beam Headlight
M32 - Right High Beam Headlight
M33 - Left Front Side Marker Light
M34 - Right Front Side Marker Light
N6 - Series Resistance Wire
T1 - Single Connector, behind fuse/relay panel
T1a - Single Connector, behind fuse/relay panel
T2n - Double Connector
T2o - Double Connector
T4e - 4-Pin Connector
T4f - 4-Pin Connector
T28 - 28-Pin Connector, on instrument cluster

120 - round connection -2-, in headlight wiring harness

125 - round connection -3-, in headlight wiring harness

C1 - Plus connection (58L), in left front wiring harness

C2 - Plus connection (58R), in left front wiring harness

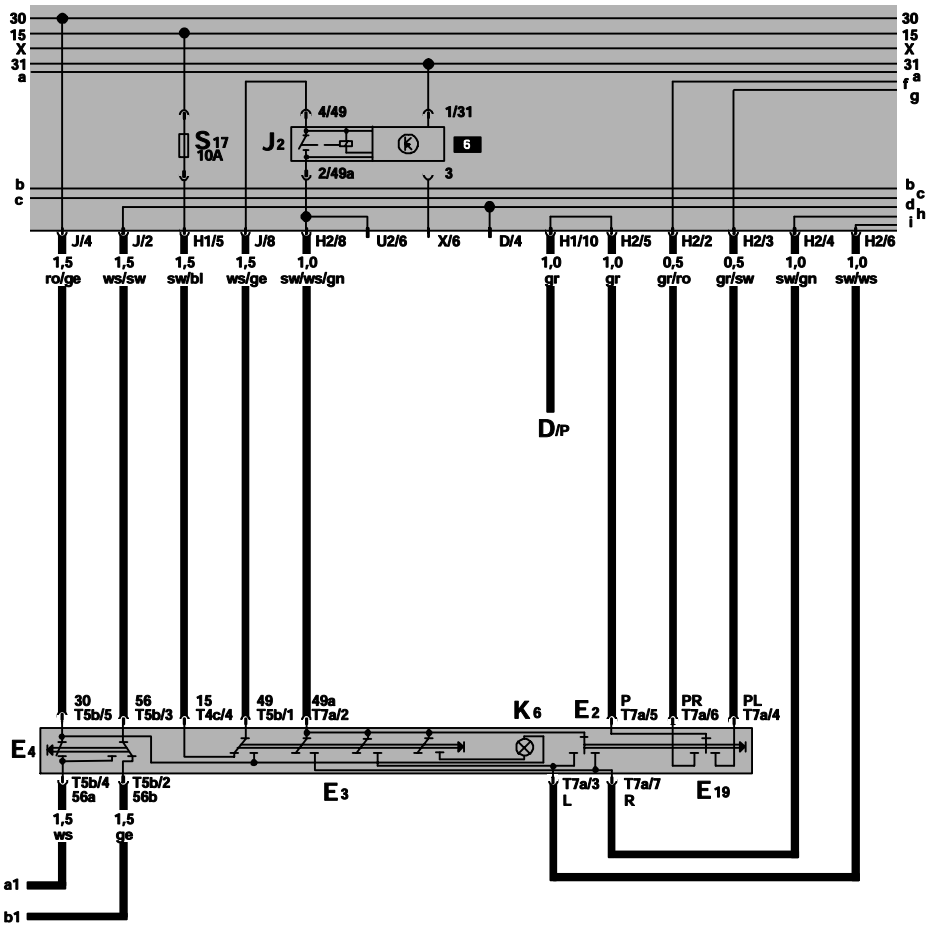

ws = white
sw = black
ro = red
br = brown
gn = green
bl = blue
gr = grey
li = violet
ge = yellow

D – Ignition/Starter Switch
E2 – Turn Signal Switch
E3 – Emergency Flasher Switch
E4 – Headlight Dimmer/Flasher Switch
E19 – Park Light Switch
J2 – Emergency Flasher Relay
K6 – Emergency Flasher Warning Light
T4c – 4-Pin Connector, behind steering column switch cover
T5b – 5-Pin Connector, behind steering column switch cover
T7a – 7-Pin Connector, behind steering column switch cover

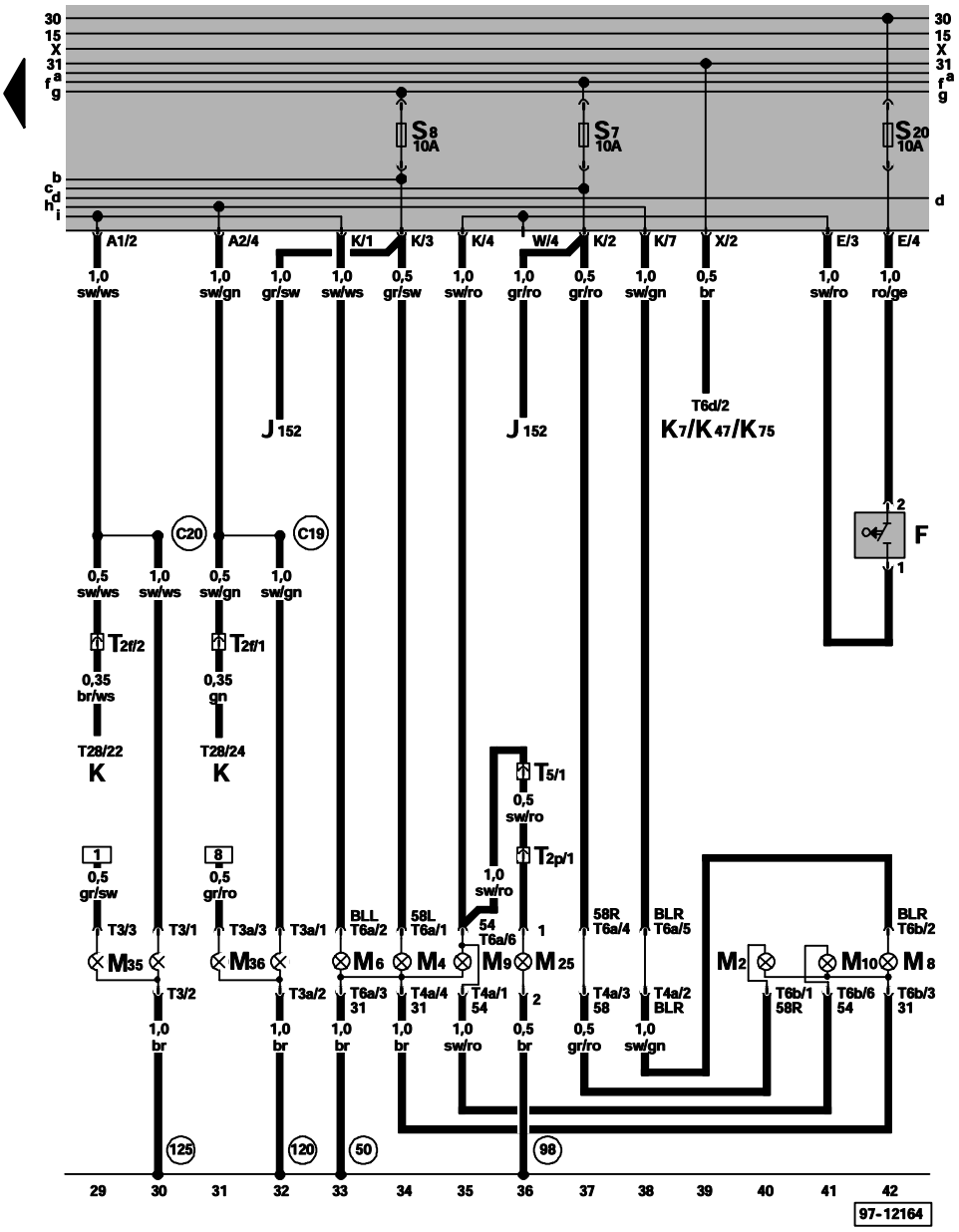

ws = white
sw = black
ro = red
br = brown
gn = green
bl = blue
gr = grey
li = violet
ge = yellow

F – Brake Light Switch
J152 – Radio/Parking Light Warning Buzzer
K – Instrument Cluster
K7 – Brake and Parking Brake Warning Light
K47 – ABS Warning Light
K75 – Airbag Malfunction Indicator Lamp (MIL)
M2 – Right Tail Light
M4 – Left Tail Light
M6 – Left Rear Turn Signal Light
M8 – Right Rear Turn Signal Light
M9 – Left Brake Light
M10 – Right Brake Light
M25 – High-Mount Brake Light
M35 – Left Front Turn Signal and Side Marker Light
M36 – Right Front Turn Signal and Side Marker Light
T2f – Double Connector, behind fuse/relay panel
T2p – Double Connector, in rear lid
T3 – 3-Pin Connector
T3a – 3-Pin Connector
T4a – 4-Pin Connector, on tail light, left
T5 – 5-Pin Connector, in luggage compartment, left
T6a – 6-Pin Connector, on tail light, left
T6b – 6-Pin Connector, on tail light, right
T6d – 6-Pin Connector, on Brake and Parking Brake Warning Light
T28 – 28-Pin Connector, on instrument cluster

(50) – Ground connection, in luggage compartment, left

(98) – Ground connection, in rear lid wiring harness

(120) – Ground connection –2–, in headlight wiring harness

(125) – Ground connection –3–, in headlight wiring harness

(C19) – Wire connection (right turn signal), in headlight wiring harness

(C20) – Wire connection (left turn signal), in headlight wiring harness

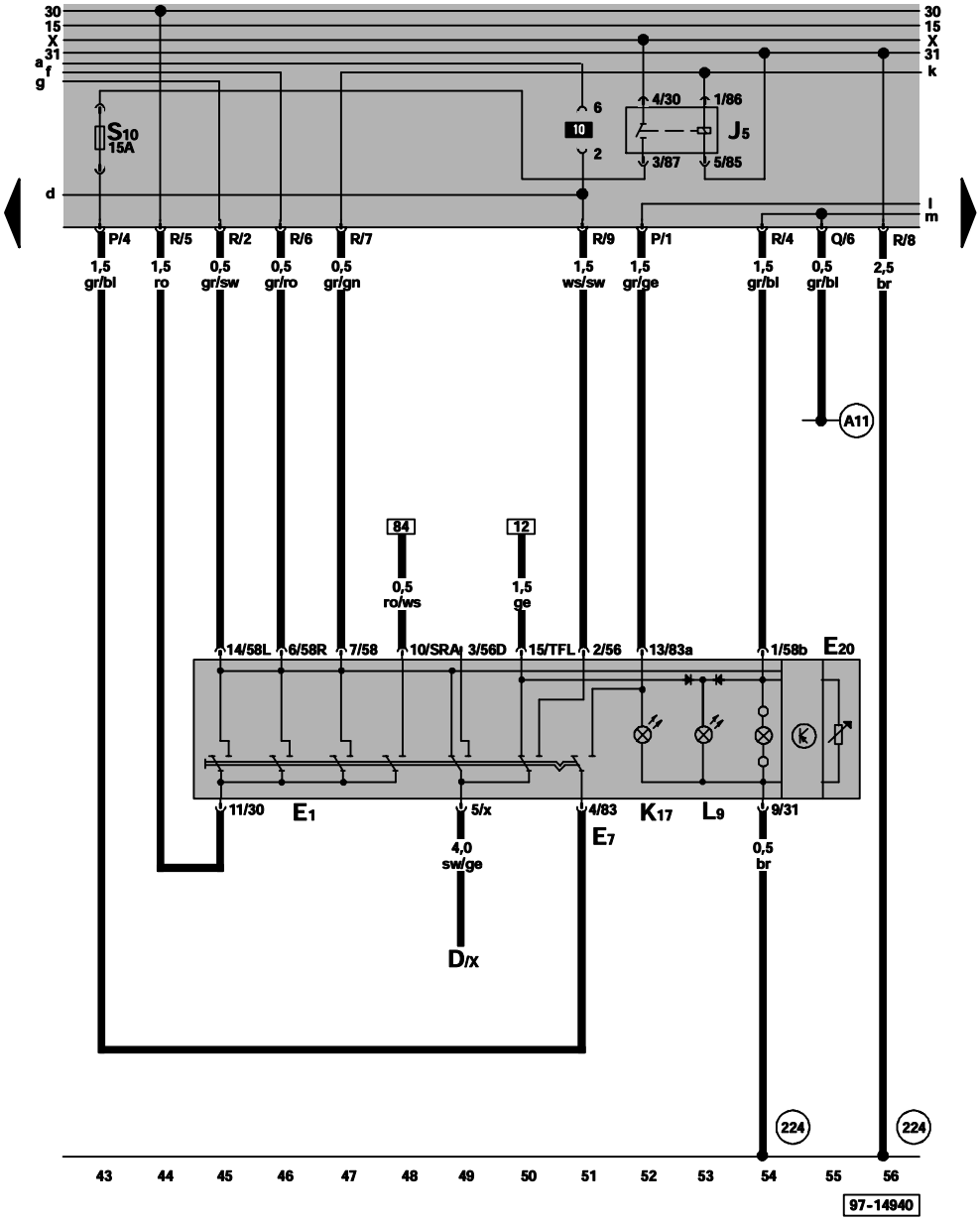

ws	white
sw	black
ro	red
br	brown
gn	green
bl	blue
gr	grey
li	violet
ge	yellow

D - Ignition/Starter Switch
E1 - Light Switch
E7 - Fog Light Switch
E20 - Instrument Panel Light Dimmer Switch
5 - Fog Light Relay
17 - Fog Light Indicator Light
L9 - Headlight Switch Light

224 - round connection, in light switch wiring harness

A11 - plus connection (58b) in instrument wiring panel harness

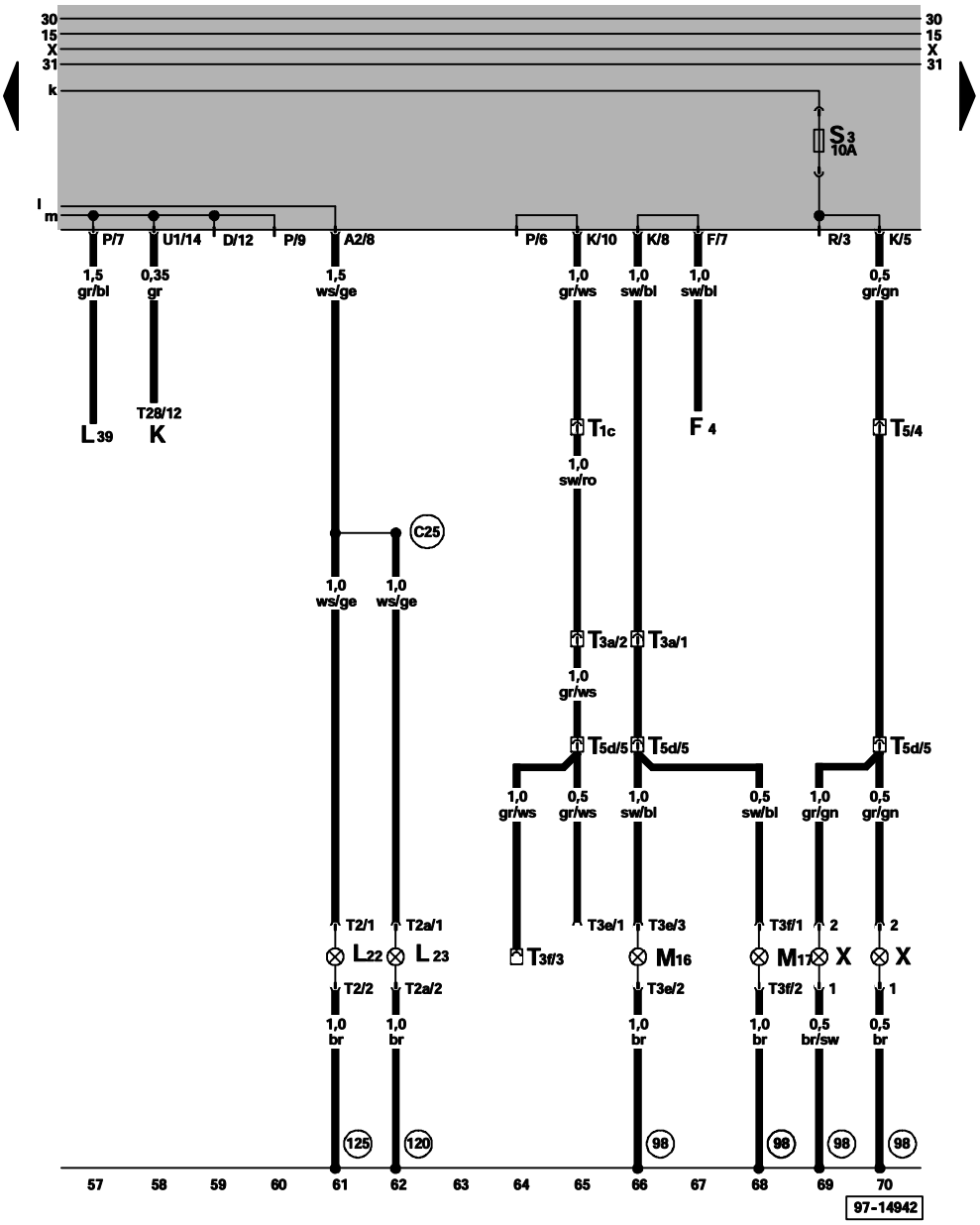

ws	white
sw	black
ro	red
br	brown
gn	green
bl	blue
gr	grey
li	violet
ge	yellow

F4 - Back- p Light Switch
- Instrument Cluster
L22 - Left Front Fog Light
L23 - Right Front Fog Light
L39 - Rear Window Defogger Switch Light
M16 - Left Back- p Light
M17 - Right Back- p Light
T1c - Single Connector, in luggage compartment, left
T2 - Double Connector
T2a - Double Connector
T3a - 3-Pin Connector, in luggage compartment, left
T3e - 3-Pin Connector
T3f - 3-Pin Connector
T5 - 5-Pin Connector, in luggage compartment, left
T5d - 5-Pin Connector, in rear lid
T28 - 28-Pin Connector, on instrument cluster
- License Plate Light

98 - round connection, in rear lid wiring harness
120 - round connection -2-, in headlight wiring harness
125 - round connection -3-, in headlight wiring harness
C25 - Wire connection (fog lights), in front light wiring harness

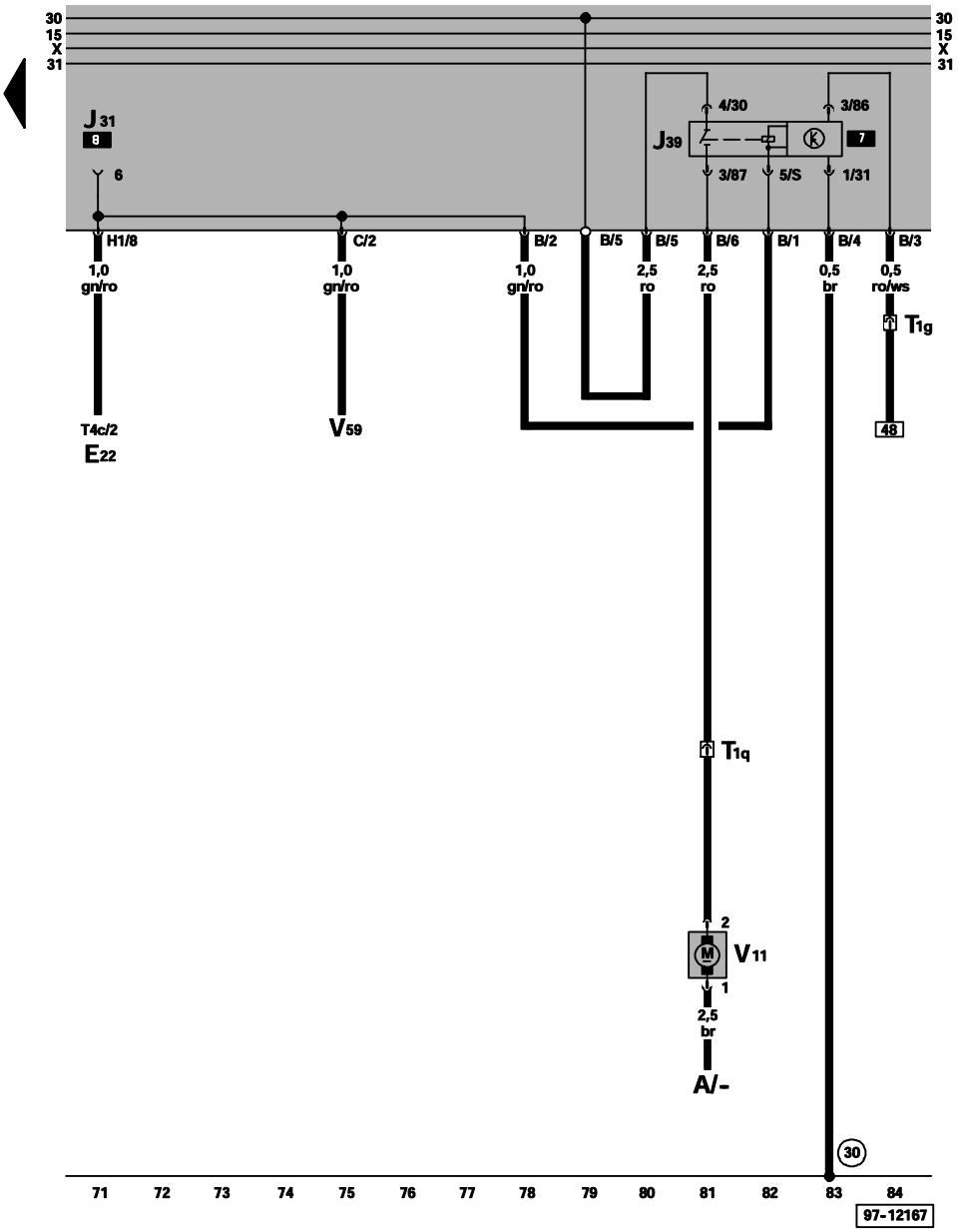

ws = white
sw = black
ro = red
br = brown
gn = green
bl = blue
gr = grey
li = violet
ge = yellow

A – Battery
E22 – Windshield Wiper/Washer Switch
J39 – Headlight Washer System Relay
T1g – Single Connector, behind fuse/relay panel
T1q – Single Connector, behind fuse/relay panel
T4c – 4-Pin Connector, behind steering column switch cover
V11 – Headlight Washer Pump
V59 – Windshield and Rear Window Washer Pump

(30) – Ground connection, –1–, beside fuse/relay panel

2.0L-Engine – Motronic Mutiport Fuel Injection (MFI)/85kW, code ABA,

from February 1995

Relay location
For relay location and multiple connectors see also section "component locations".

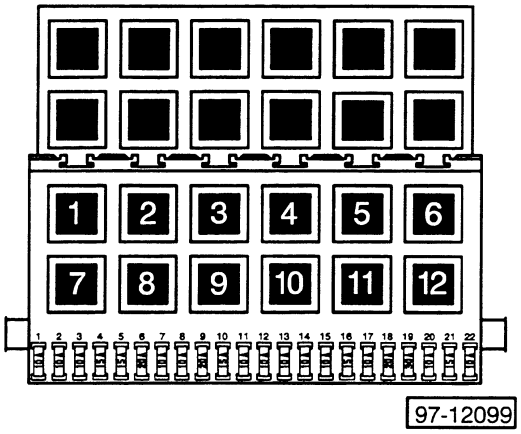

3 – Motronic Engine Control Module (ECM) Power Supply Relay (109)

12 – Fuel Pump (FP) Relay (167)

Note: Number in parentheses indicates production contro number stamped on relay housing.

Fuse colors

30A – green
25A – white
20A – yellow
15A – blue
10A – red

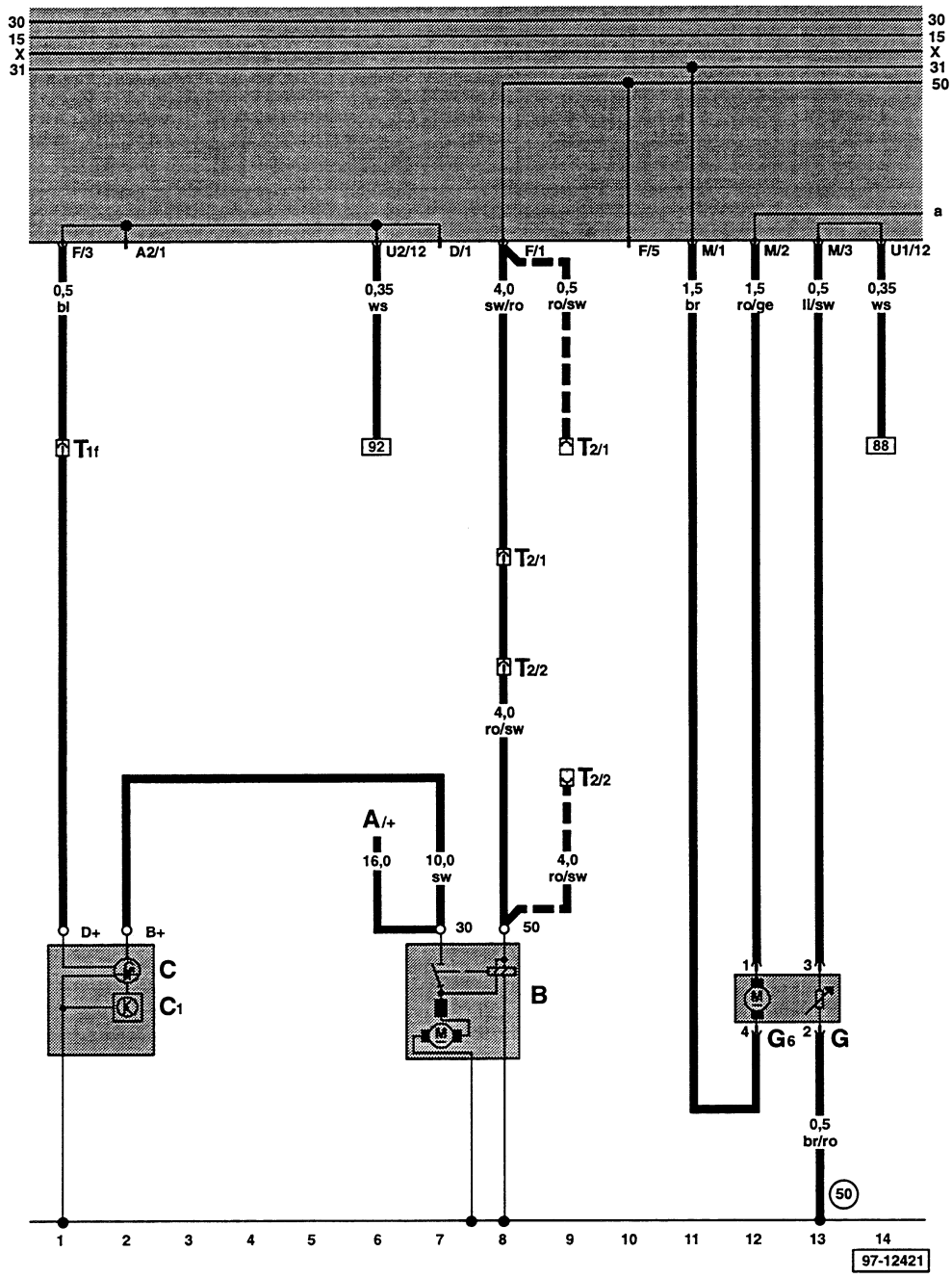

ws = white
sw = black
ro = red
br = brown
gn = green
bl = blue
gr = grey
li = violet
ge = yellow

A – Battery
B – Starter
C – Generator (GEN)
C1 – Voltage Regulator (VR)
G – Fuel Level Sensor
G6 – Fuel Pump (FP)
T1f – Single Connector, near starter
T2 – Double Connector, behind fuse/relay panel

(50) – Ground connection, in luggage compartment, left

▬▬ – Automatic transmission only

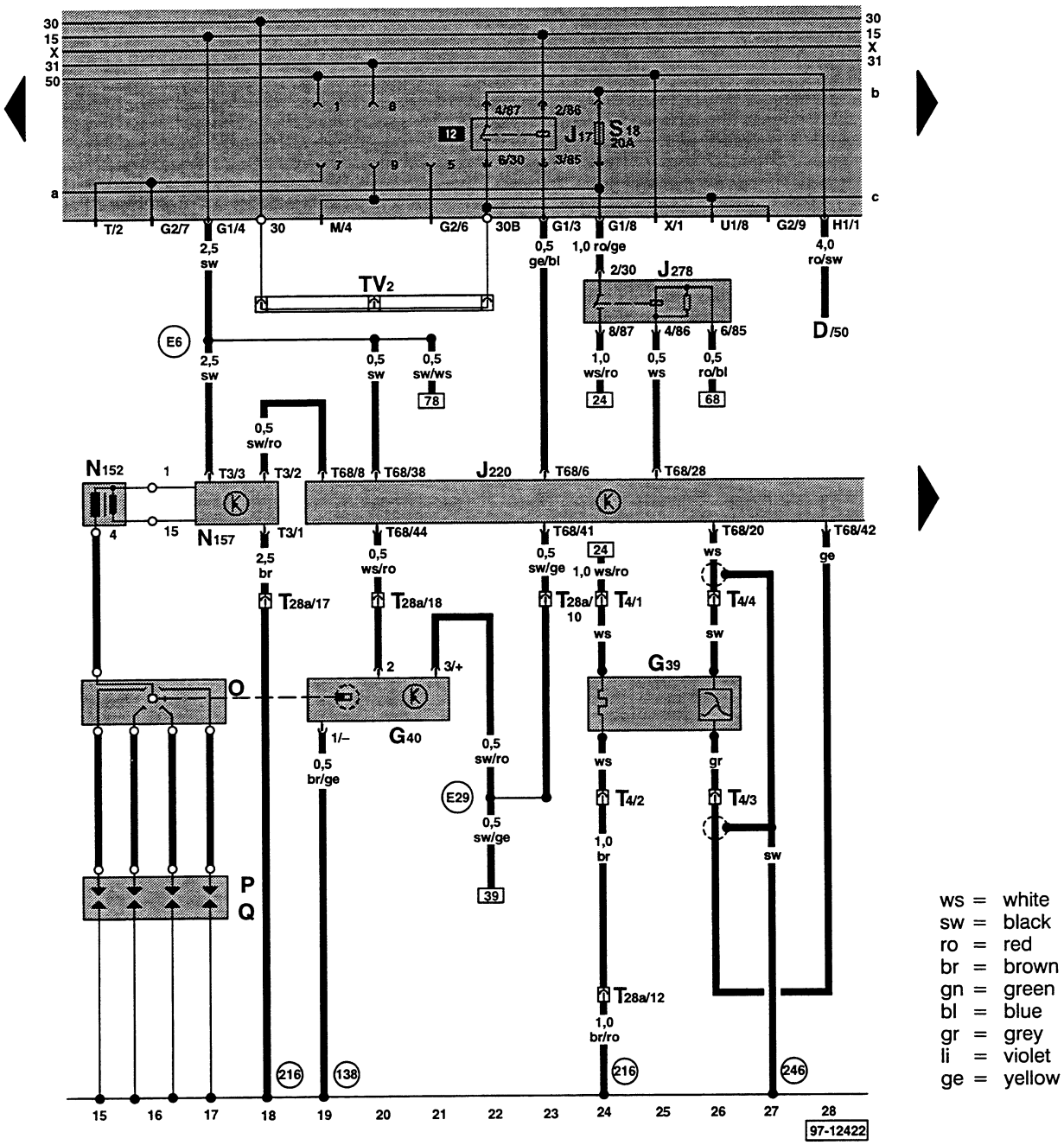

ws = white
sw = black
ro = red
br = brown
gn = green
bl = blue
gr = grey
li = violet
ge = yellow

D – Ignition/Starter Switch
G39 – Heated Oxygen Sensor (HO2S) (00525–2342)
G40 – Camshaft Position (CMP) Sensor (00515–2113)
J17 – Fuel Pump (FP) Relay (01259–4433)
J220 – Motronic Engine Control Module (ECM), in plenum chamber, right
J278 – Heated Oxygen Sensor (HO2S) Relay (00640), on auxiliary relay panel, behind instrument panel, left
N152 – Ignition Coil
N157 – Ignition Coil Power Output Stage
O – Ignition Distributor
P – Spark Plug Connectors
Q – Spark Plugs
T3 – 3-Pin Connector
T4 – 4-Pin Connector
T28a – 28-Pin Connector, on left cylinder head
T68 – 68-Pin Connector

TV2 – Terminal 30 (B+) Wire Connector, above fuse/relay panel

138 – Ground connection (control module), in Motronic Multiport Fuel Injection (MFI) wiring harness

216 – Ground connection –2–, in Motronic Multiport Fuel Injection (MFI) wiring harness

246 – Ground connection (control module), in engine wiring harness

E6 – Plus connection –1– (15), in Motronic Multiport Fuel Injection (MFI) wiring harness

E29 – Wire connection, in engine wiring harness

Motronic engine control module (ECM), heated oxygen sensor (HO2S) relay, heated oxygen sensor (HO2S), fuel pump (FP) relay

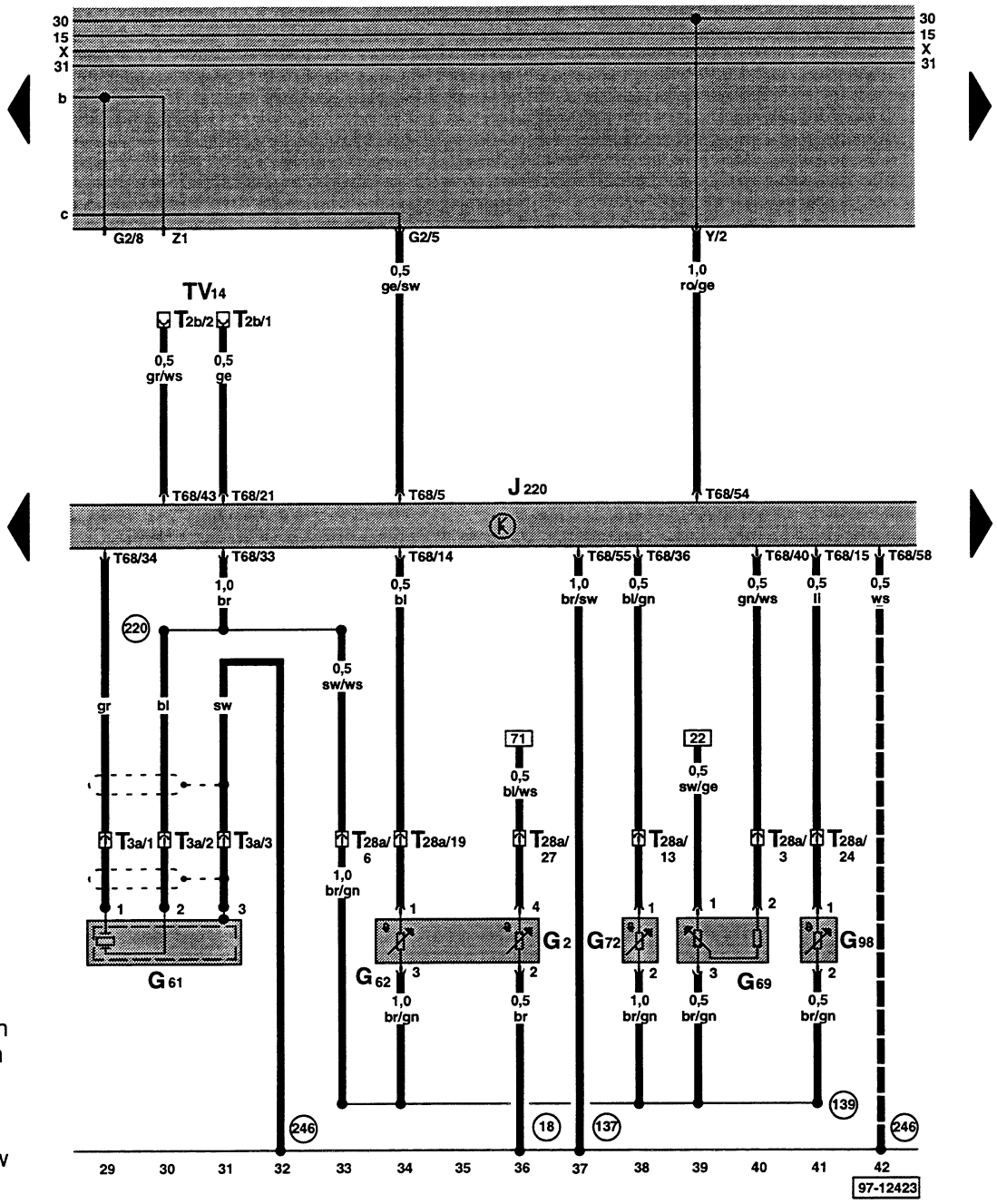

ws = white
sw = black
ro = red
br = brown
gn = green
bl = blue
gr = grey
li = violet
ge = yellow

- G2 – Engine Coolant Temperature (ECT) Sensor (01039)
- G61 – Knock Sensor (KS)
- G62 – Engine Coolant Temperature (ECT) Sensor (00522)
- G69 – Throttle Position (TP) Sensor (00518)
- G72 – Intake Air Temperature (IAT) Sensor (00527)
- G98 – EGR Temperature Sensor (00585)
- J220 – Motronic Engine Control Module (ECM), in plenum chamber, right
- T2b – Double Connector, on Data Link Connector (DLC) Wire Connector, behind console
- T28a – 28-Pin Connector, on left cylinder head
- T68 – 68-Pin Connector
- TV14 – Data Link Connector (DLC) Wire Connector, behind console

- (18) – Ground connection, on engine block
- (137) – Ground connection (end stage), in Motronic Multiport Fuel Injection (MFI) wiring harness
- (139) – Ground connection (sensor ground), in Motronic Multiport Fuel Injection (MFI) wiring harness
- (220) – Ground connection (sensor ground), in engine wiring harness
- (246) – Ground connection (control module), in engine wiring harness

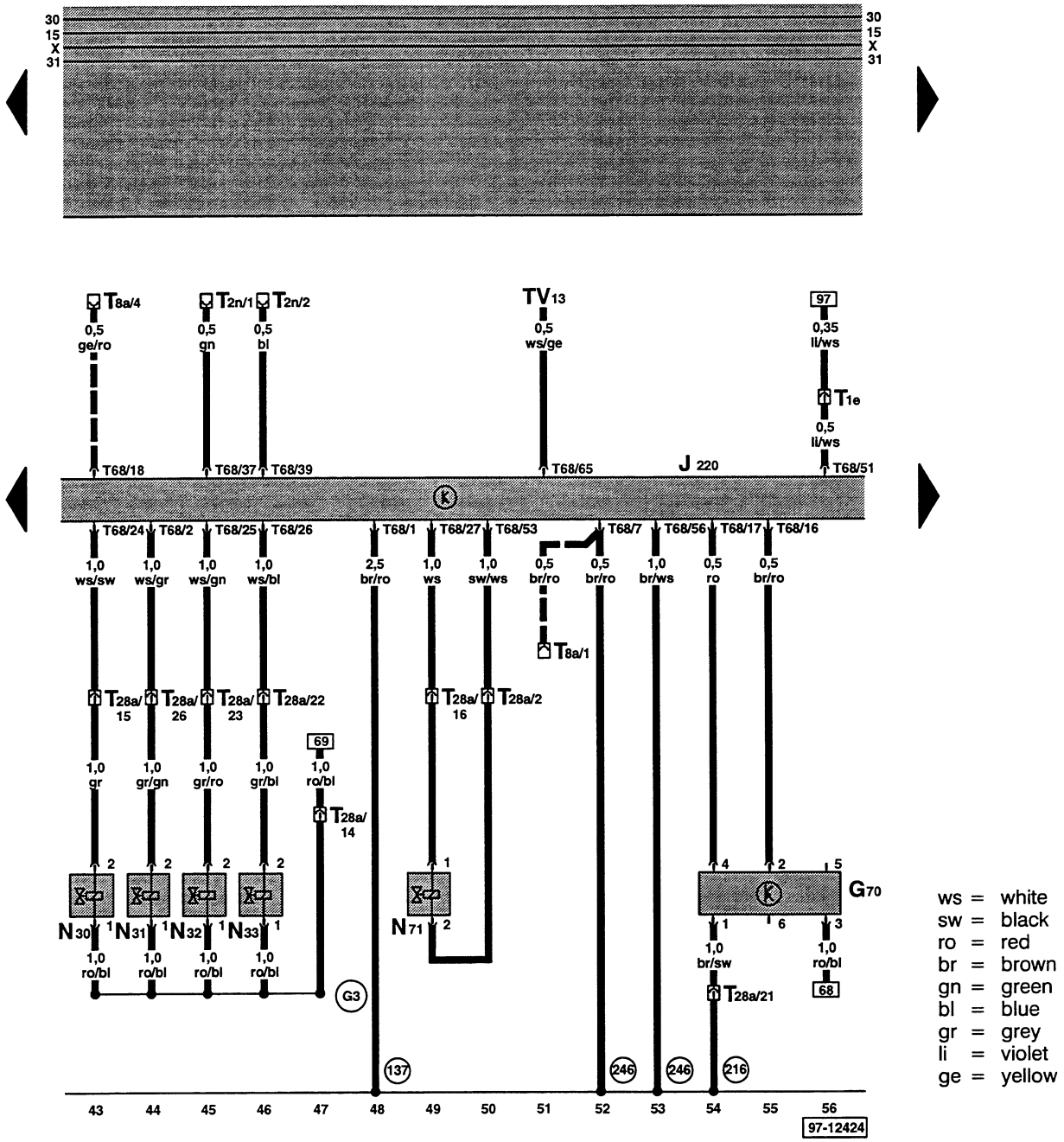

ws = white
sw = black
ro = red
br = brown
gn = green
bl = blue
gr = grey
li = violet
ge = yellow

- G70 – Mass Air Flow (MAF) Sensor (00553)
- J220 – Motronic Engine Control Module (ECM), in plenum chamber. right
- N30 – Cylinder 1 Fuel Injector (01249)
- N31 – Cylinder 2 Fuel Injector (01250)
- N32 – Cylinder 3 Fuel Injector (01251)
- N33 – Cylinder 4 Fuel Injector (01252)
- N71 – Idle Air Control (IAC) Valve (01257)
- T1e – Single Connector, multi-function indicator signal
- T2n – Double Connector, behind fuse/relay panel, A/C connection
- T8a – 8-Pin Connector, behind fuse/relay panel
- T28a – 28-Pin Connector, on left cylinder head
- T68 – 68-Pin Connector
- TV13 – Vehicle Speed Signal Wire Connector, above fuse/relay panel

- (137) – Ground connection (end stage), in Motronic Multiport Fuel Injection (MFI) wiring harness
- (216) – Ground connection –2–, in Motronic Multiport Fuel Injection (MFI) wiring harness
- (246) – Ground connection (control module), in engine wiring harness
- (G3) – Plus connection, in injectors wiring harness
- ▬▬ – Automatic transmission only

Motronic engine control module (ECM), injectors, idle air control (IAC) valve, mass air flow (MAF) sensor

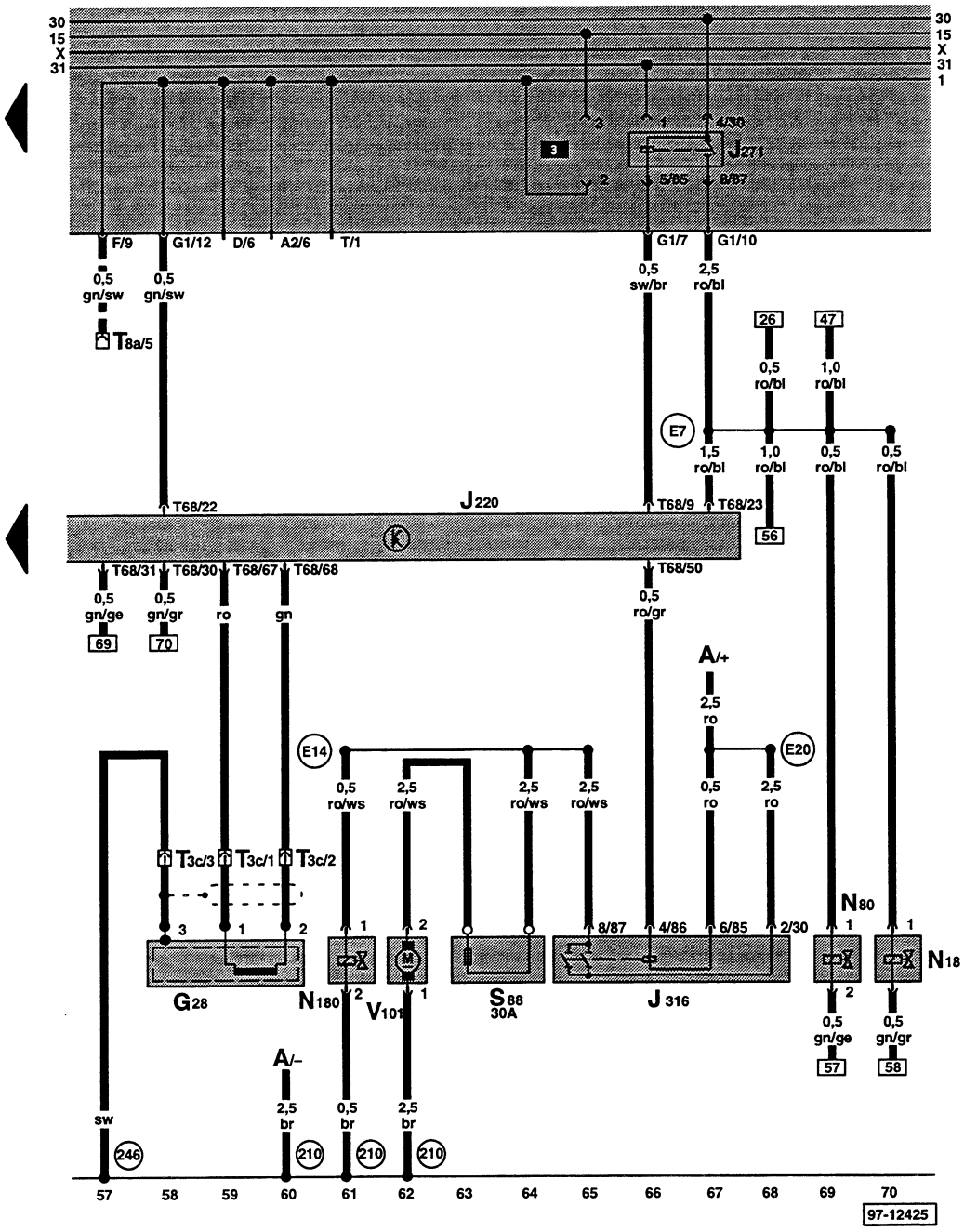

ws = white
sw = black
ro = red
br = brown
gn = green
bl = blue
gr = grey
li = violet
ge = yellow

A – Battery
G28 – Engine Speed (RPM) Sensor (00513)
J220 – Motronic Engine Control Module (ECM), in plenum chamber, right
J271 – Motronic Engine Control Module (ECM) Power Supply Relay
J316 – Secondary Air Injection (AIR) Relay, production control number (111), on firewall, left
N18 – EGR Vacuum Regulator Solenoid Valve (01265)
N80 – Evaporative Emission (EVAP) Canister Purge Regulator Valve (01247)
N180 – Change-Over Valve
S88 – Fuse Strip for Secondary Air Injection (AIR)
T3c – 3-Pin Connector, near starter
T8a – 8-Pin Connector, behind fuse/relay panel
T68 – 68-Pin Connector
V101 – Secondary Air Injection (AIR) Pump Motor

(210) – Ground connection –1–, in Motronic Multiport Fuel Injection (MFI) wiring harness

(246) – Ground connectio (control module), in engine wiring harness

(E7) – Plus connection (87), in Motronic Multiport Fuel Injection (MFI) wiring harness

(E14) – Wire connection –1–, in Motronic Multiport Fuel Injection (MFI) wiring harness

(E20) – Plus connection (30), in Motronic Multiport Fuel Injection (MFI) wiring harness

▬▬ – Automatic transmission only

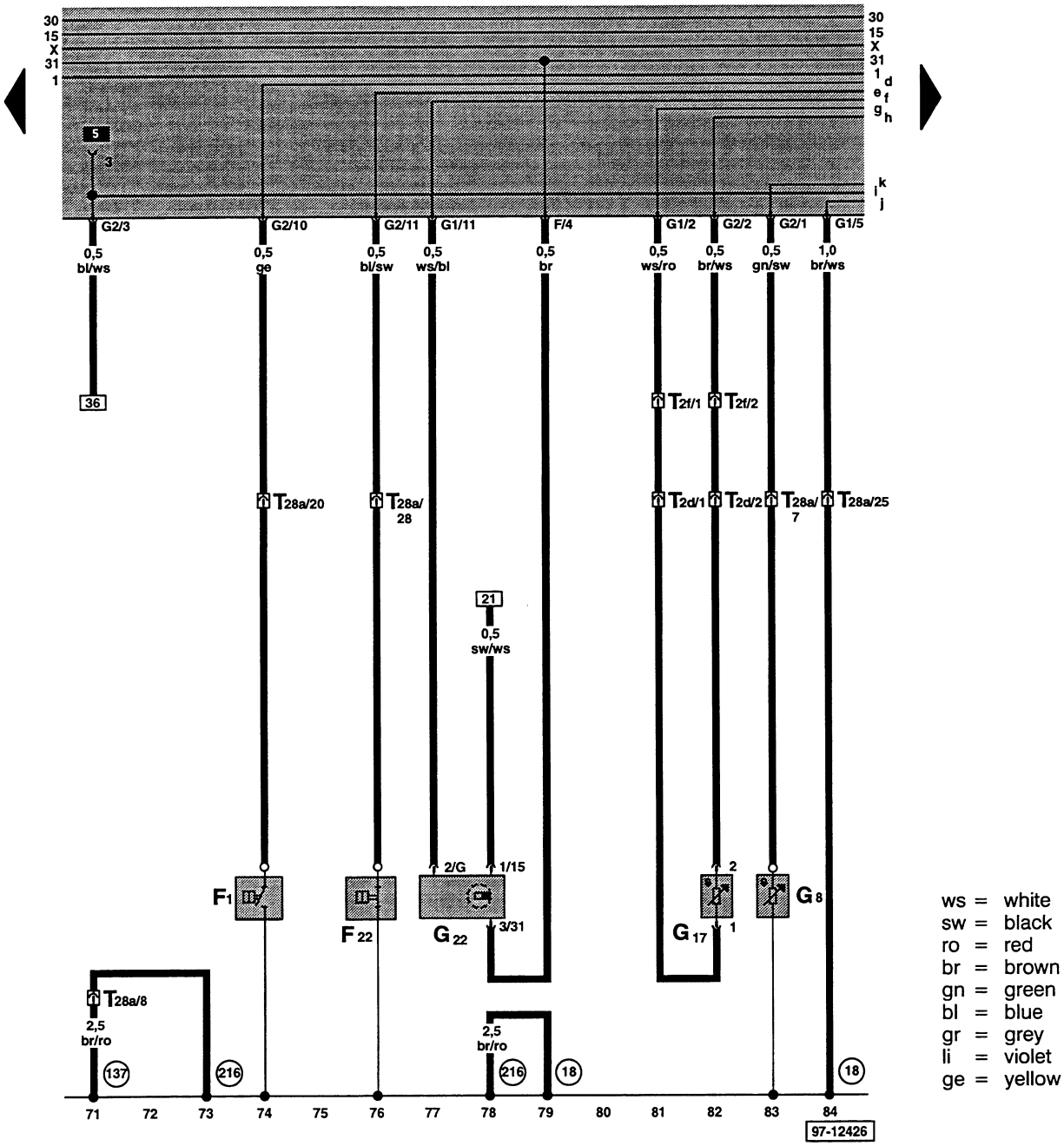

ws = white
sw = black
ro = red
br = brown
gn = green
bl = blue
gr = grey
li = violet
ge = yellow

F1 – Oil Pressure Switch
F22 – 0.3 Bar Oil Pressure Switch
G8 – Oil Temperature Sensor
G17 – Outside Air Temperature Sensor
G22 – Speedometer Vehicle Speed Sensor (VSS) (01086), (hall sensor, on transmission)
T2d – Double Connector, in engine comparment, right front
T2f – Double Connector, behind fuse/relay panel
T28a – 28-Pin Connector, on left cylinder head

(18) – Ground connection, on engine block

(137) – Ground connection (end stage), in Motronic Multiport Fuel Injection (MFI) wiring harness

(216) – Ground connection –2–, in Motronic Multiport Fuel Injection (MFI) wiring harness

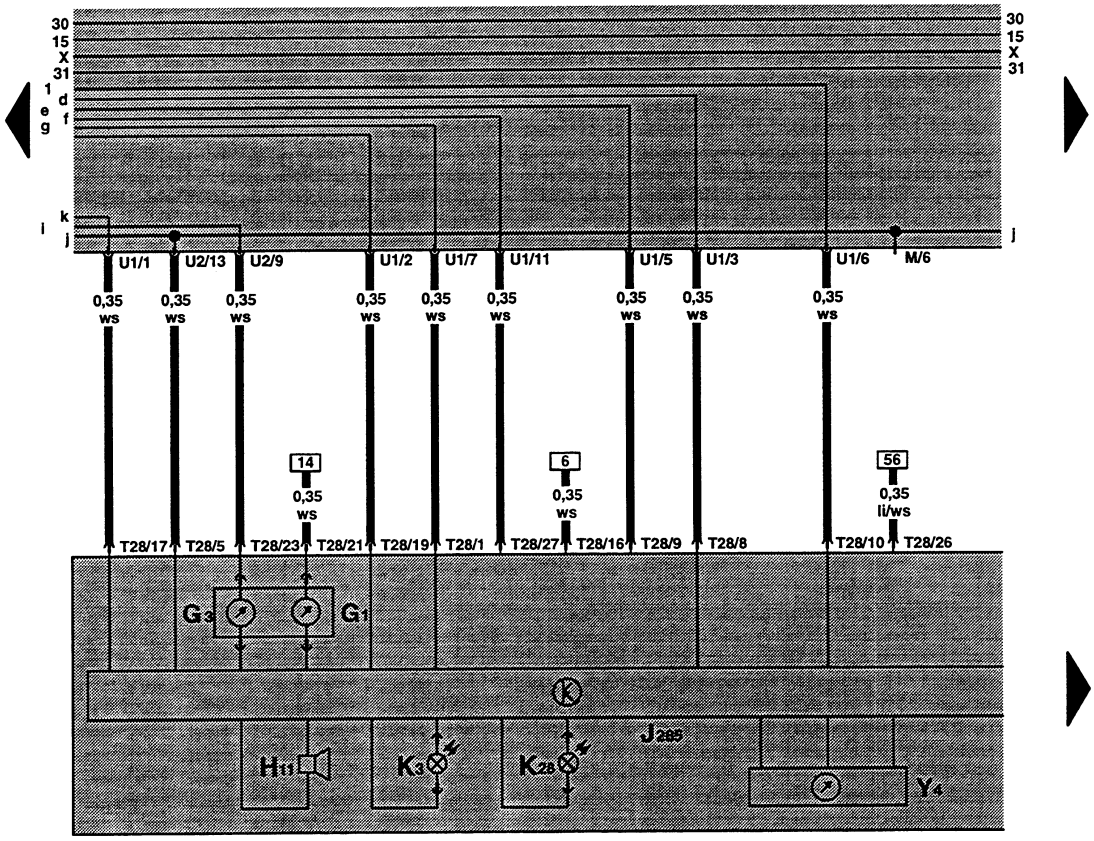

ws = white
sw = black
ro = red
br = brown
gn = green
bl = blue
gr = grey
li = violet
ge = yellow

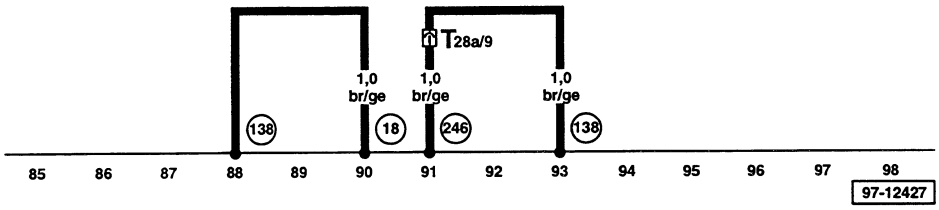

G1 – Fuel Gauge (00664)
G3 – Engine Coolant Temperature (ECT) Gauge
H11 – Oil Pressure Warning Buzzer
J285 – Control Module With Display Unit In Instrument Cluster
K3 – Oil Pressure Warning Light (00755)
K28 – Engine Coolant Level/Temperature (ECL/ECT) Warning Light
T28 – 28-Pin Connector, on instrument cluster
T28a – 28-Pin Connector, on left cylinder head
Y4 – Odometer Display

(18) – Ground connection, on engine block

(138) – Ground connection (control module), in Motronic Multiport Fuel Injection (MFI) wiring harness

(246) – Ground connection (control module), in engine wiring harness

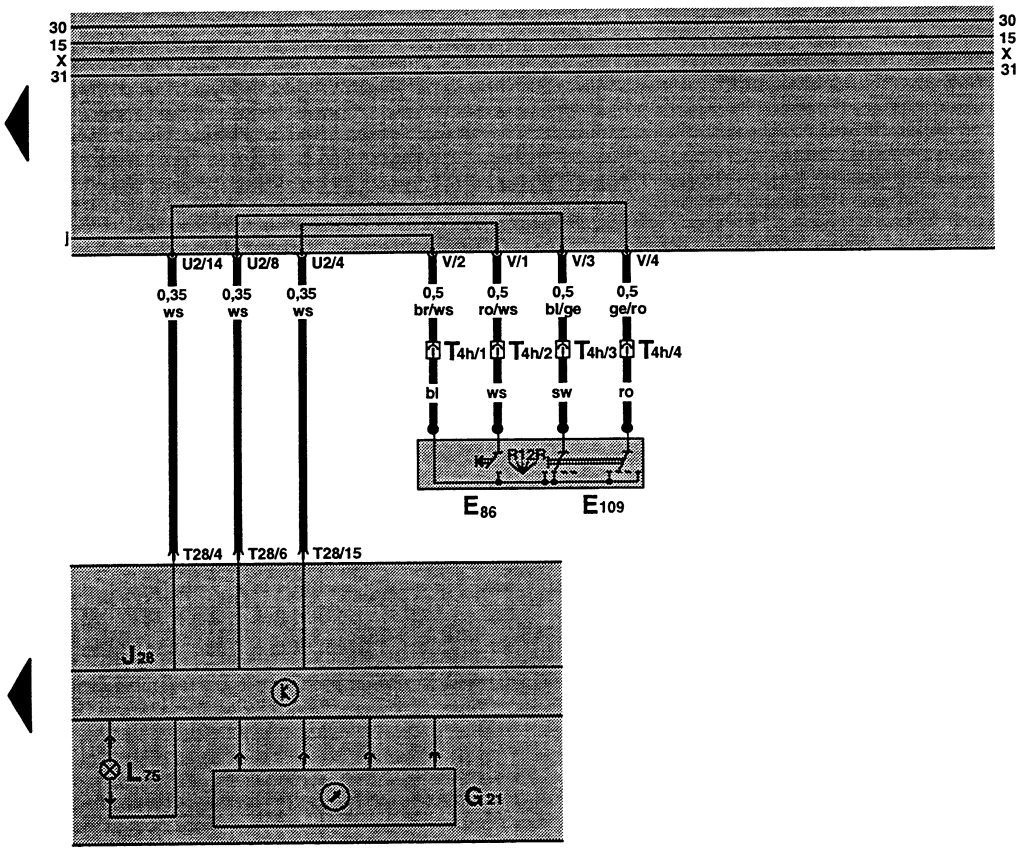

ws = white
sw = black
ro = red
br = brown
gn = green
bl = blue
gr = grey
li = violet
ge = yellow

99 100 101 102 103 104 105 106 107 108 109 110 111 112

97-12428

E86 – Multi-Function Indicator Mode Select Switch
E109 – Multi-Function Indicator Memory Switch
G21 – Speedometer (00663)
J285 – Control Module With Display Unit In Instrument Cluster
L75 – Digital Display Light
T4h – 4-Pin Connector, behind steering column switch cover
T28 – 28-Pin Connector, on instrument cluster

Airbag,

from August to September 1994

Relay location
For relay location and multiple connectors see also section "component locations".

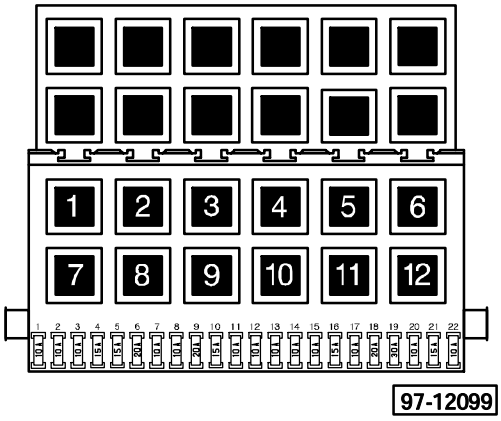

Fuse colors

30A – green
25A – white
20A – yellow
15A – blue
10A – red

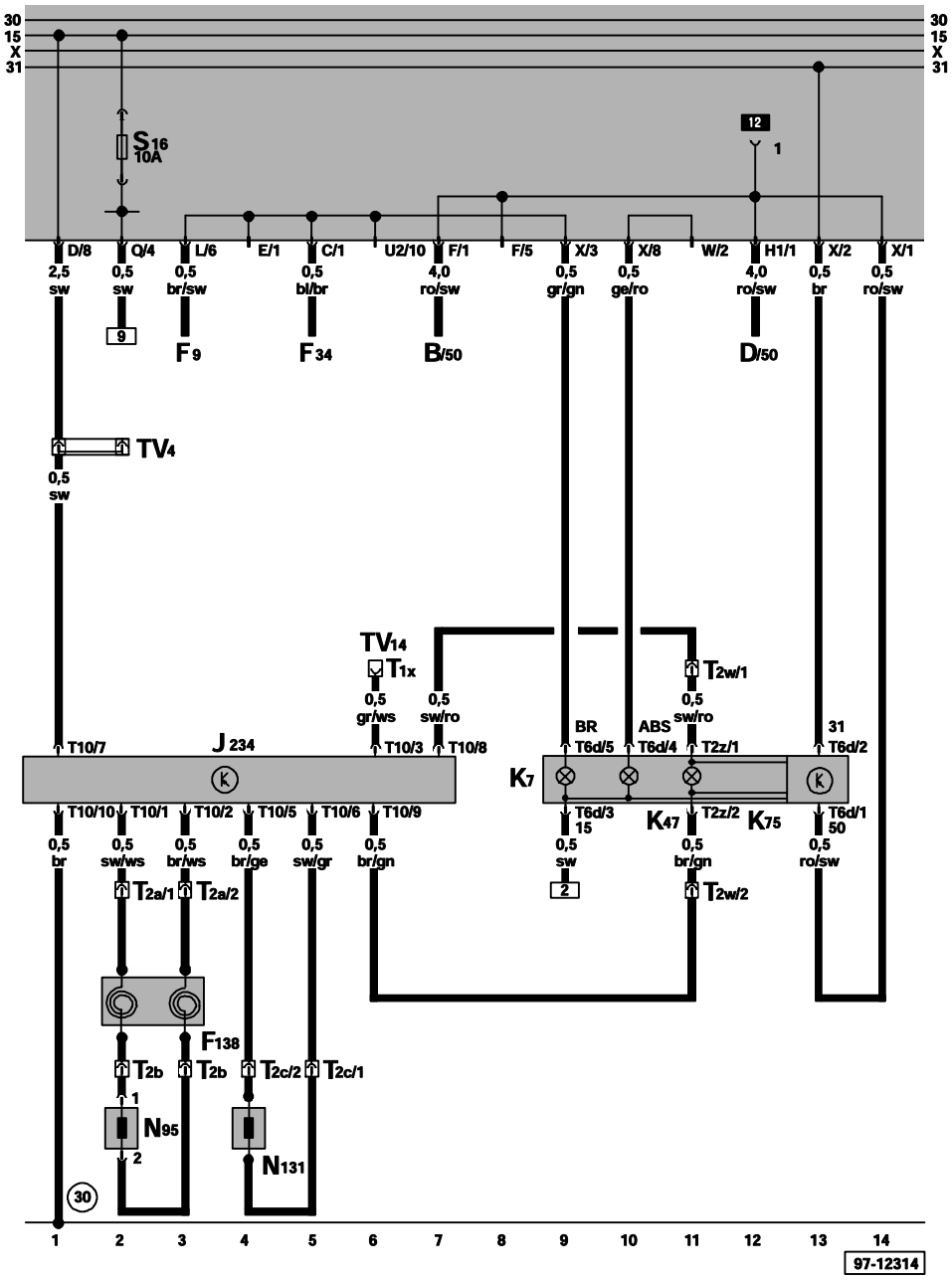

ws = white
sw = black
ro = red
br = brown
gn = green
bl = blue
gr = grey
li = violet
ge = yellow

B – Starter
D – Ignition/Starter Switch
F9 – Parking Brake Warning Light Switch
F34 – Brake Fluid Level Warning Switch
F138 – Airbag Spiral Spring/Return Spring With Slip Ring
J234 – Airbag Control Module, behind console
K7 – Brake and Parking Brake Warning Light
K47 – ABS Warning Light
K75 – Airbag Malfunction Indicator Lamp (MIL)
N95 – Driver's Side Airbag Igniter (00588)
N131 – Passenger's Side Airbag Igniter 1 (00589)
T1x – Single Connector, on Data Link Connector (DLC) Wire Connector
T2a – Double Connector, behind steering column switch cover
T2b – Double Connector, in steering
T2c – Double Connector, behind instrument panel, right
T2w – Double Connector, behind fuse/relay panel
T2z – Double Connector
T6d – 6-Pin Connector
T10 – 10-Pin Connector
TV4 – Terminal 15 Wire Connector, above fuse relay panel
TV14 – Data Link Connector (DLC) Wire Connector, behind console
(30) – Ground connection, –1–, beside fuse/relay panel

Air conditioning,
D 2.0l-Engine – Motronic Multiport Fuel In ection (MFI)/85kW, code ABA,

from February 1995

Relay location
For relay location and multiple connectors see also section "component locations".

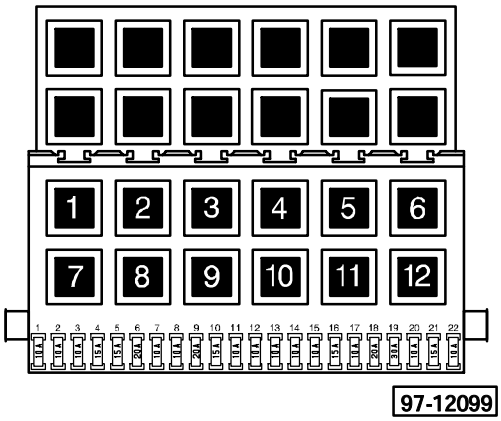

Fuse colors

30A – green
25A – white
20A – yellow
15A – blue
10A – red

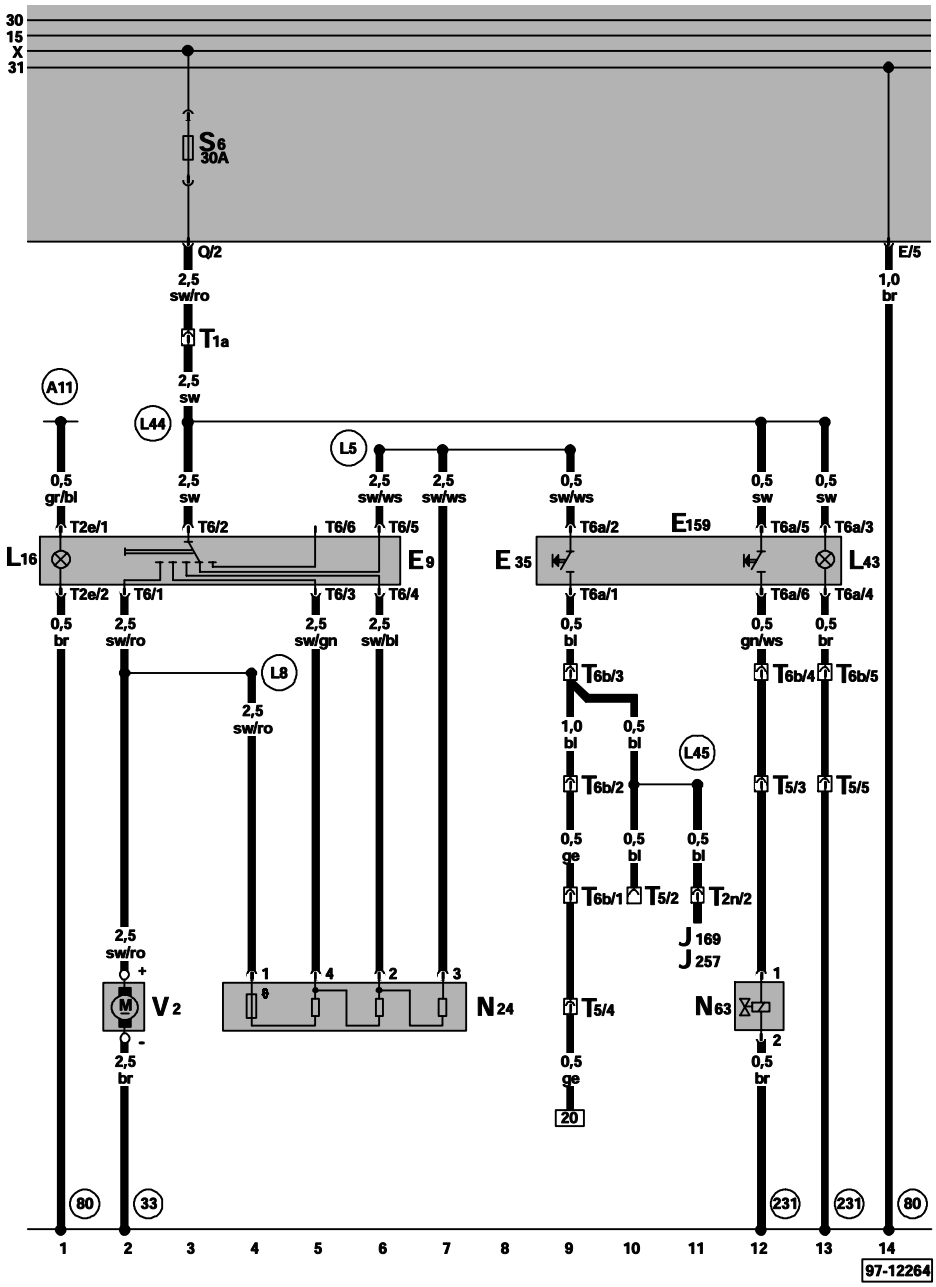

ws = white
sw = black
ro = red
br = brown
gn = green
bl = blue
gr = grey
li = violet
ge = yellow

E9 – Fresh Air Blower Switch
E35 – A/C Switch
E159 – Fresh Air/Recirculating Flap Switch
L16 – Fresh Air Control Lever Light
L43 – A/C Switch Illumination Light
N24 – Fresh Air Blower Series Resistance With Fuse
N63 – Fresh Air/Recirculating Flap Two-Way Valve
T1a – Single Connector, behind fuse/relay panel
T2e – Double Connector
T2n – Double Connector, behind fuse?relay panel
T5 – 5-Pin Connector, behind fuse/relay panel
T6 – 6-Pin Connector
T6a – 6-Pin Connector
T6b – 6-Pin Connector, behind instrument panel, center
V2 – Fresh Air Blower

33 – Ground connection, behind instrument panel, right

80 – Ground connection –1–, in instrument panel wiring harness

231 – Ground connection, in A/C system–coolant fan wiring harness

A11 – Plus connection (58b) in instrument panel wiring harness

L5 – Wire connection –1–, in evaporator housing wiring harness

L8 – Wire connection –4–, in evaporator housing wiring harness

L44 – Wire connection (X), in A/C system wiring harness

L45 – Wire connection, in A/C system wiring harness

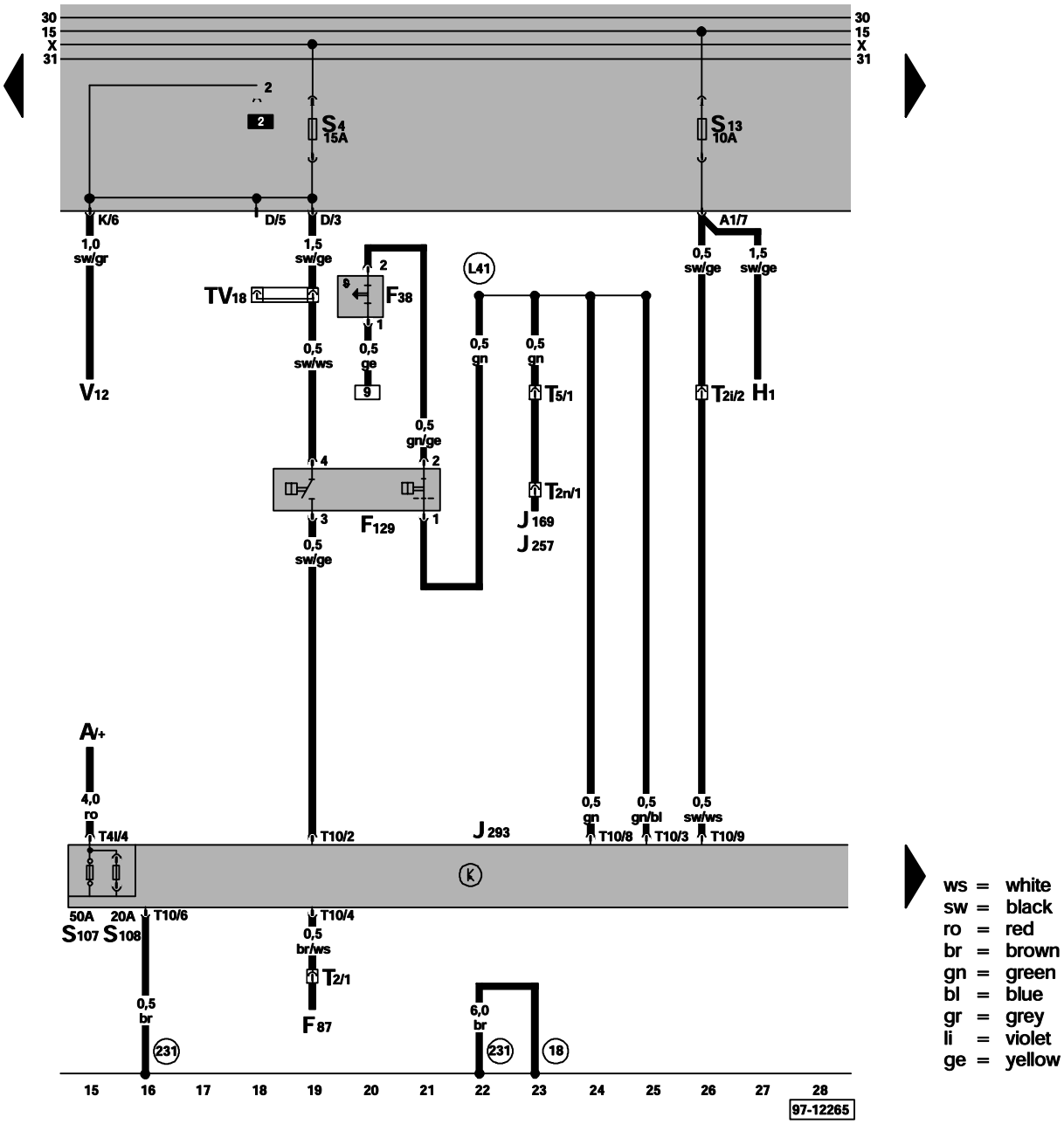

ws = white
sw = black
ro = red
br = brown
gn = green
bl = blue
gr = grey
li = violet
ge = yellow

A – Battery
F38 – Ambient Temperature Switch, in plenum chamber, right
F87 – After-Run Coolant Fan Control (FC) Thermal Switch
F129 – A/C Pressure Switch
H1 – Dual Horns
J220 – Motronic Engine Control Module (ECM)
J293 – Coolant Fan Control (FC) Control Module, in engine compartment, left
S107 – Coolant Fan Second and Third Speed Fuse
S108 – Coolant Fan First Speed and A/C Clutch Fuse
T2 – Double Connector, behind fuse/relay panel
T2i – Double Connector, behind fuse/relay panel
T2n – Double Connector, behind fuse/relay panel
T4l – 4-Pin Connector, on Coolant Fan Control (FC) Control Module
T5 – 5-Pin Connector, behind fuse/relay panel
T10 – 10-Pin connector, on Coolant Fan Control (FC) Control Module
TV18 – Distributor for Terminal Xa, above fuse/relay panel
V12 – Rear Window Wiper Motor
18 – Ground connectiuon, on engine block
231 – Ground connection, in A/C system-coolant fan wiring harness
L42 – Wire connection (A/C on), in A/C system-coolant fan wiring harness

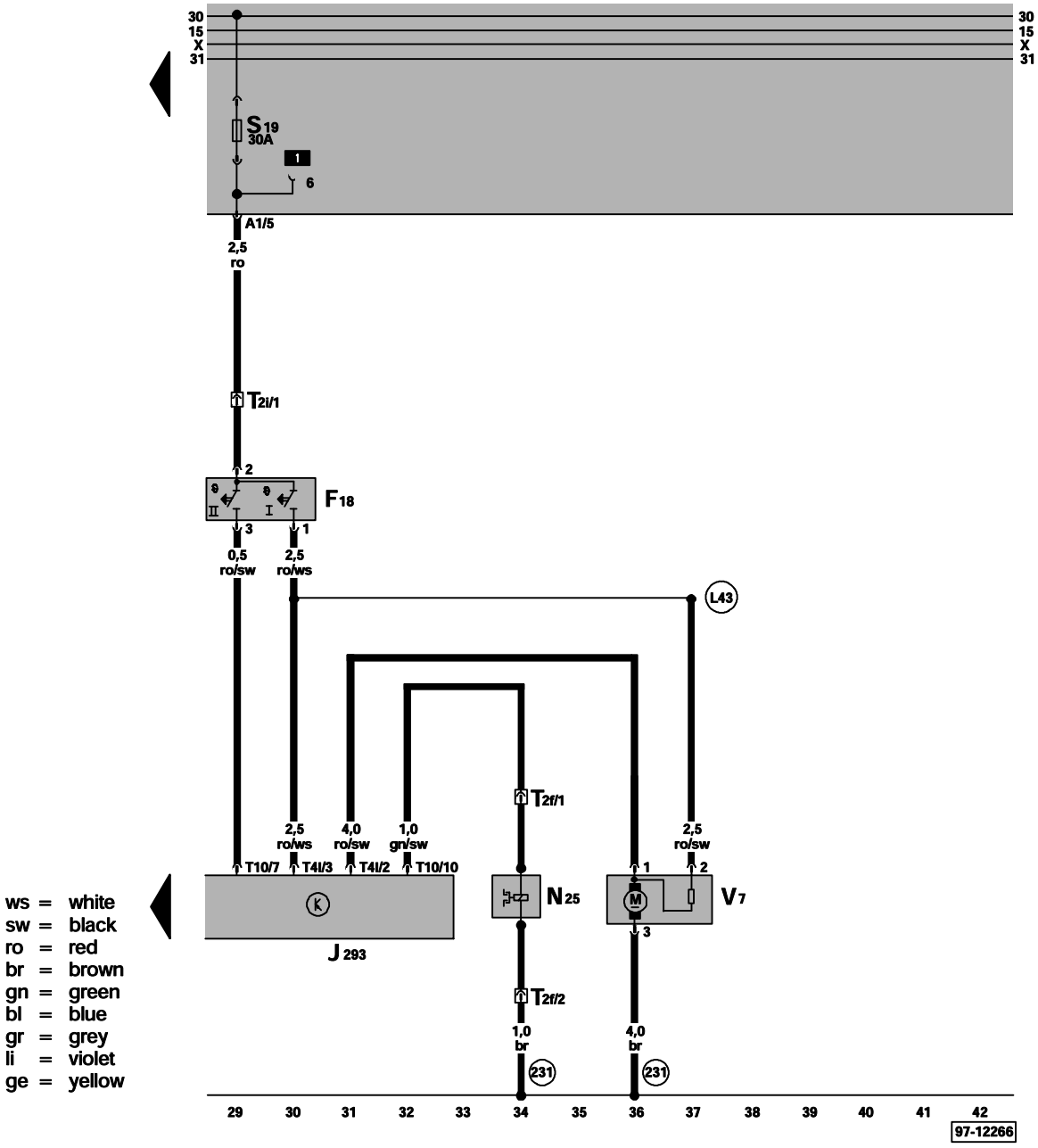

ws = white
sw = black
ro = red
br = brown
gn = green
bl = blue
gr = grey
li = violet
ge = yellow

F18 – Coolant Fan Control (FC) Thermal Switch
J293 – Coolant Fan Control (FC) Control Module, in engine compartment, left
N25 – A/C Clutch
T2f – Double Connector, near compressor
T2i – Double Connector, behind fuse/relay panel
T4l – 4-Pin Connector, on Coolant Fan Control (FC) Control Module
T10 – 10-Pin Connector, on Coolant Fan Control (FC) Control Module
T28 – 28-Pin Connector, on instrument cluster
V7 – Coolant Fan

(231) – Ground connection, in A/C system-coolant fan wiring harness

(L43) – Wire connection (coolant fan), in A/C system-coolant fan wiring harness

Automatic transmission,
D 2.8L-Engine – Motronic Multiport Fuel In ection (MFI)/128kW, code AAA,
D 2.0L-Engine – Motronic Multiport Fuel In ection (MFI)/85kW, code ABA,

from anuary 1995

Relay location
For relay location and multiple connectors see also section "component locations".

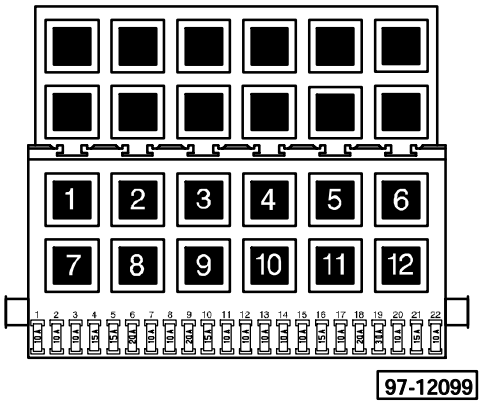

Fuse colors

30A – green
25A – white
20A – yellow
15A – blue
10A – red

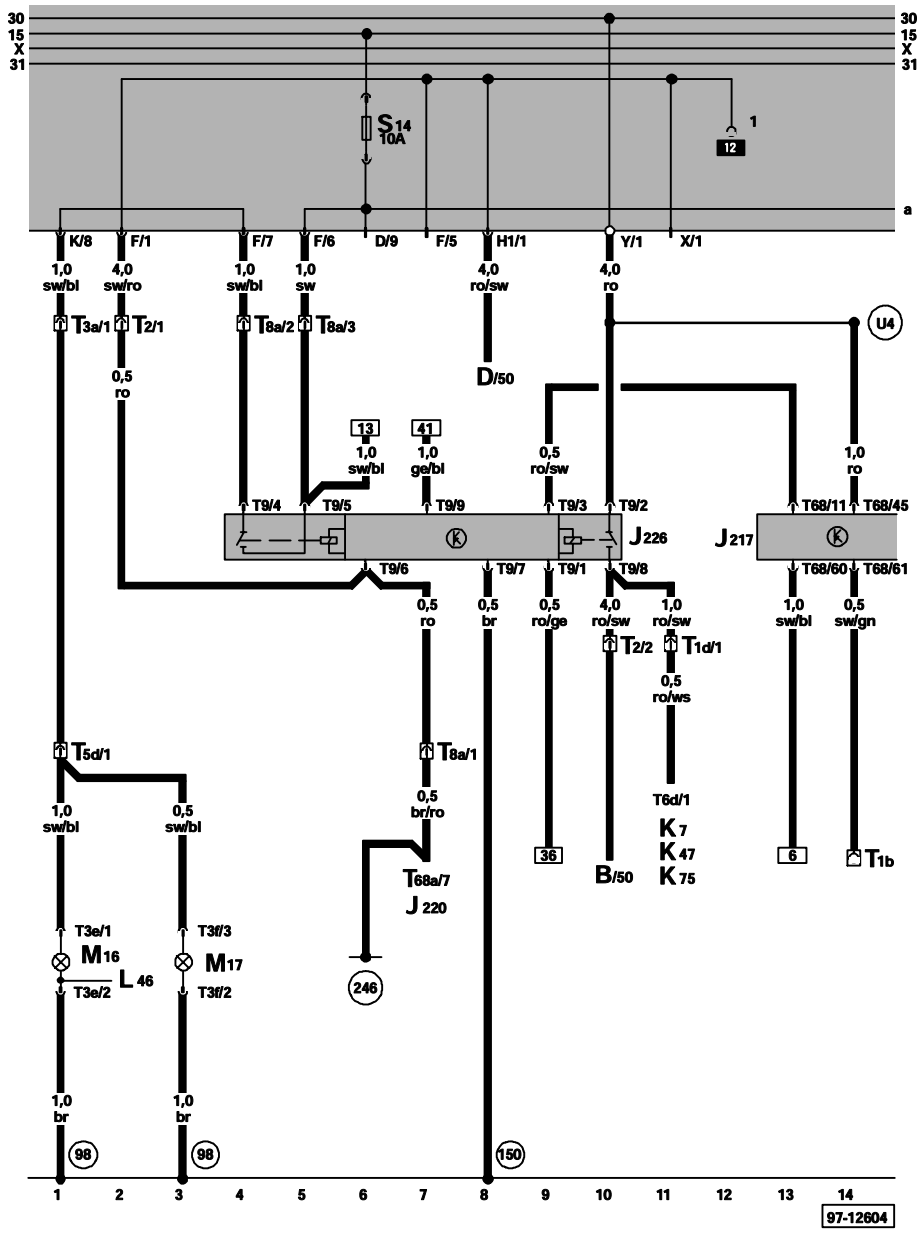

ws = white
sw = black
ro = red
br = brown
gn = green
bl = blue
gr = grey
li = violet
ge = yellow

D – Ignition/Starter Switch
J217 – Transmission Control Module (TCM), below rear seat bench
J220 – Motronic Engine Control Module (ECM)
J226 – Park/Neutral Position (PNP) Relay, behind instrument panel, left
K7 – Brake and Parking Brake Warning Light
K47 – ABS Warning Light
K75 – Airbag Malfunction Indicator Light (MIL)
L46 – Left Rear Fog Light
M16 – Left Back-Up Light
M17 – Right Back-Up Light
T1b – Single Connector, connection for cruise control
T1d – Single Connector, behind fuse/relay panel
T2 – Double Connector, behind fuse/relay panel
T3a – 3-Pin Connector, in luggage compartment, left
T3e – 3-Pin Connector
T3f – 3-Pin Connector
T5d – 5-Pin Connector, in rear lid
T6d – 6-Pin Connector
T8a – 8-Pin Connector, behind fuse/relay panel
T9 – 9-Pin Connector
T68 – 68-Pin Connector
T68a – 68-Pin Connector, on Motronic Engine Control Module (ECM)

(98) – Ground connection, in rear lid wiring harness
(150) – Ground connection, in automatic transmission wiring harness
(246) – Ground connection (control module), in wiring harness engine
(U4) – Wire connection (30), in automatic transmission wiring harness

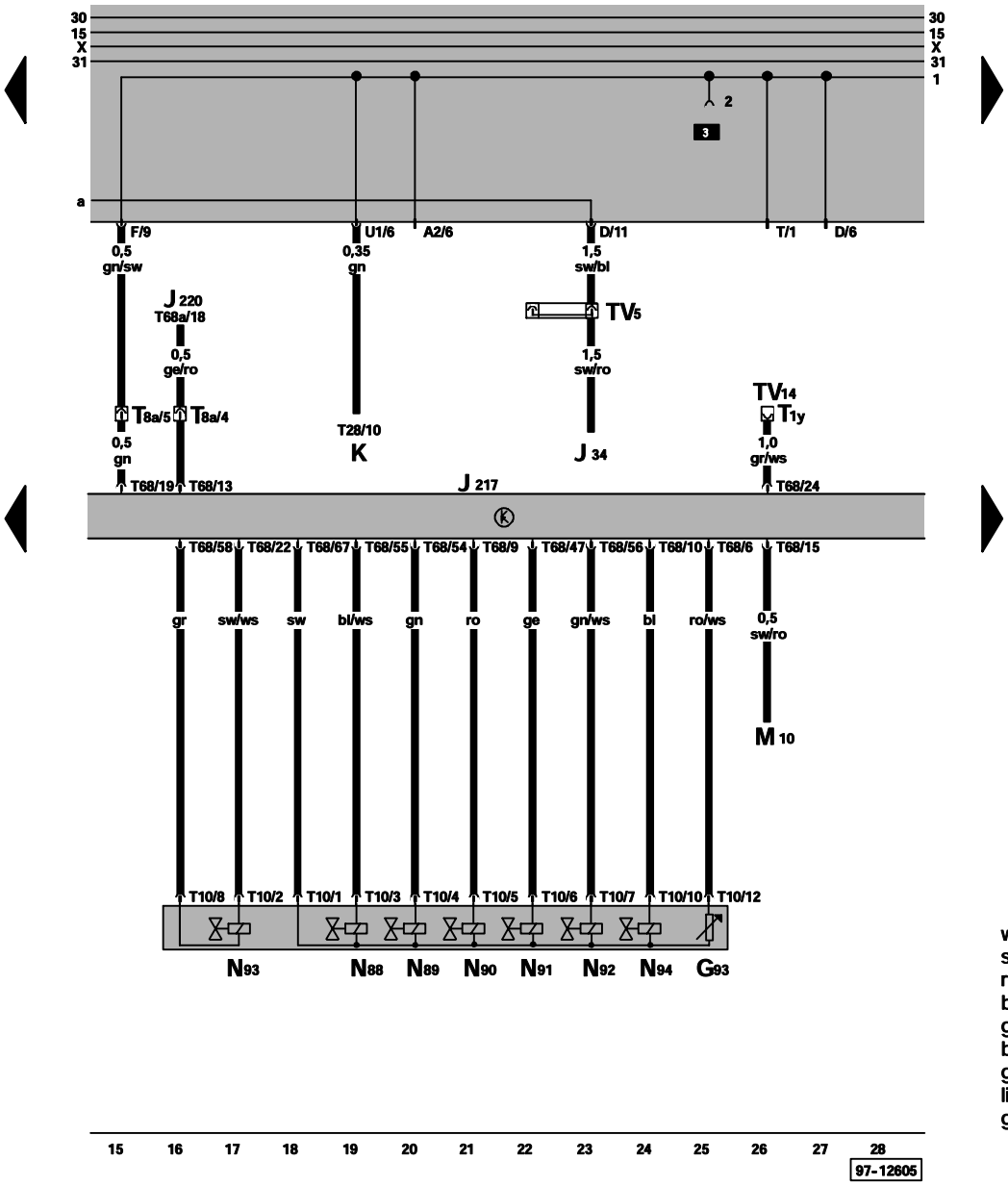

ws = white
sw = black
ro = red
br = brown
gn = green
bl = blue
gr = grey
li = violet
ge = yellow

G93 – Transmission Fluid Temperature Sensor (00300–1333)
J34 – Seat Belt Warning System Relay
J217 – Transmission Control Module (TCM), below rear seat bench
J220 – Motronic Engine Control Module (ECM)
K – Instrument Cluster
M10 – Right Brake Light
N88 – Solenoid Valve 1 (00258–1113)
N89 – Solenoid Valve 2 (00260–1121)
N90 – Solenoid Valve 3 (00262–1123)
N91 – Solenoid Valve 4 (00264–1131)
N92 – Solenoid Valve 5 (00266–1133)
N93 – Solenoid Valve 6 (00268–1141)
N94 – Solenoid Valve 7 (00270–1143)
T1y – Single Connector, on Data Link Connector (DLC) Wire Connector
T8a – 8-Pin Connector, behind fuse/relay panel
T10 – 10-Pin Connector
T28 – 28-Pin Connector, on instrument cluster
T68 – 68-Pin Connector
T68a – 68-Pin Connector, on Motronic Engine Control Module (ECM)
TV5 – Terminal 15a Wire Connector, above fuse/relay panel
TV14 – Data Link Connector (DLC) Wire Connector, behind console

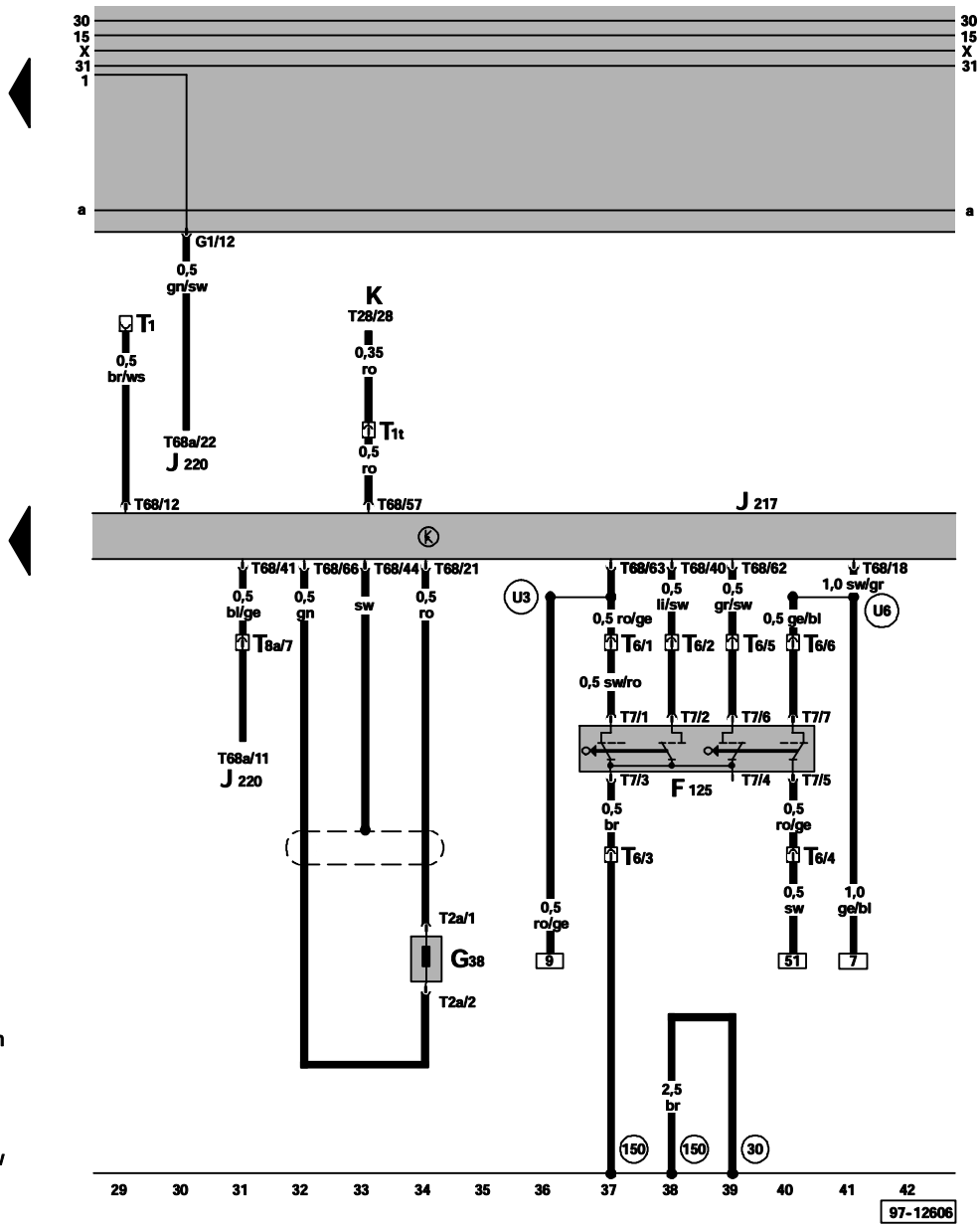

ws = white
sw = black
ro = red
br = brown
gn = green
bl = blue
gr = grey
li = violet
ge = yellow

F125 – Multi-Function Transmission Range (TR) Switch (00293–1314)
G38 – Transmission Vehicle Speed Sensor (VSS)
J217 – Transmission Control Module (TCM), below rear seat bench
J220 – Motronic Engine Control Module (ECM)
K – Instrument Cluster
T1 – Single Connector, behind fuse/relay panel, A/C connection
T1t – Single Connector, behind fuse/relay panel, connection for Transmission Range (TR) Selector Lever Display
T2a – Double Connector, white
T6 – 6-Pin Connector, in engine compartment, left
T7 – 7-Pin Connector
T8a – 8-Pin Connector, behind fuse/relay panel
T28 – 28-Pin Connector, on instrument cluster
T68 – 68-Pin Connector
T68a – 68-Pin Connector, on Motronic Engine Control Module (ECM)

(30) – Ground connection, –1–, beside fuse/relay panel

(150) – Ground connection, in automatic transmission wiring harness

(U3) – Wire connection, in automatic transmission wiring harness

(U6) – Wire connection, in automatic transmission wiring harness

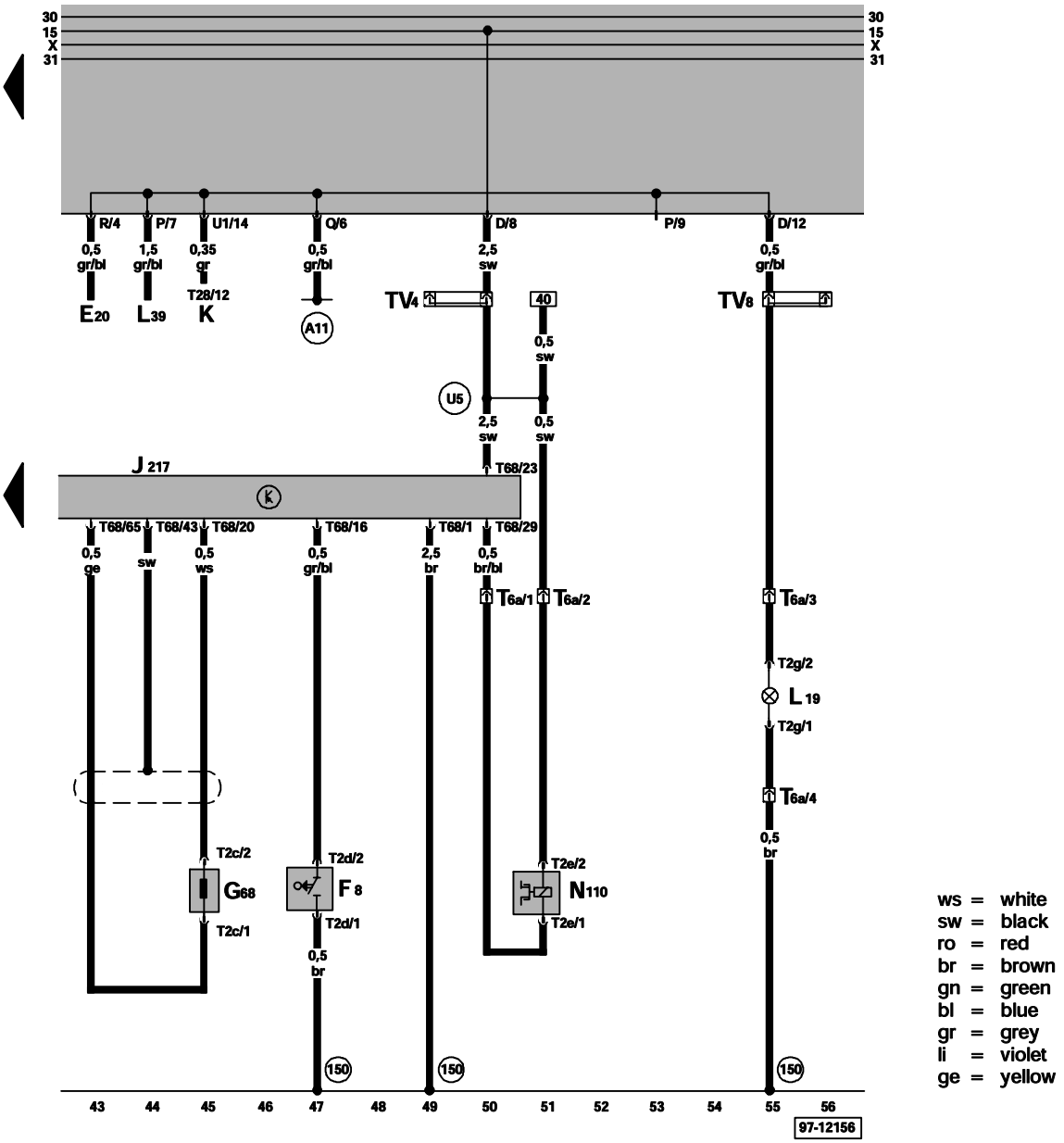

ws = white
sw = black
ro = red
br = brown
gn = green
bl = blue
gr = grey
li = violet
ge = yellow

E20 – Instrument Panel Light Dimmer Switch
F8 – Kick Down Switch
G68 – Vehicle Speed Sensor (VSS) (00281–1231)
J217 – Transmission Control Module (TCM), below rear seat bench
K – Instrument Cluster
L19 – Automatic Transmission Console Light
L39 – Rear Window Defogger Switch Light
N110 – Shift Lock Solenoid (01236–4314)
T2c – Double Connector, black
T2d – Double Connector
T2e – Double Connector
T2g – Double Connector
T6a – 6-Pin Connector, near gearshift lever
T28 – 28-Pin Connector, on instrument cluster
T68 – 68-Pin Connector
TV4 – Terminal 15 Wire Connector, above fuse/relay panel
TV8 – Terminal 58b Wire Connector, above fuse/relay panel

(150) – Ground connection, in automatic transmission wiring harness

(A11) – Plus connection (58b) in instrument panel wiring harness

(U5) – Wire connection –2– (15), in automatic transmission wiring harness

Volkswagen Passat

Official Factory Repair Manual

1996
Gasoline, Turbo Diesel, TDI
4-cylinder and VR6, including wagon

Robert Bentley

PASSAT '95 - '97

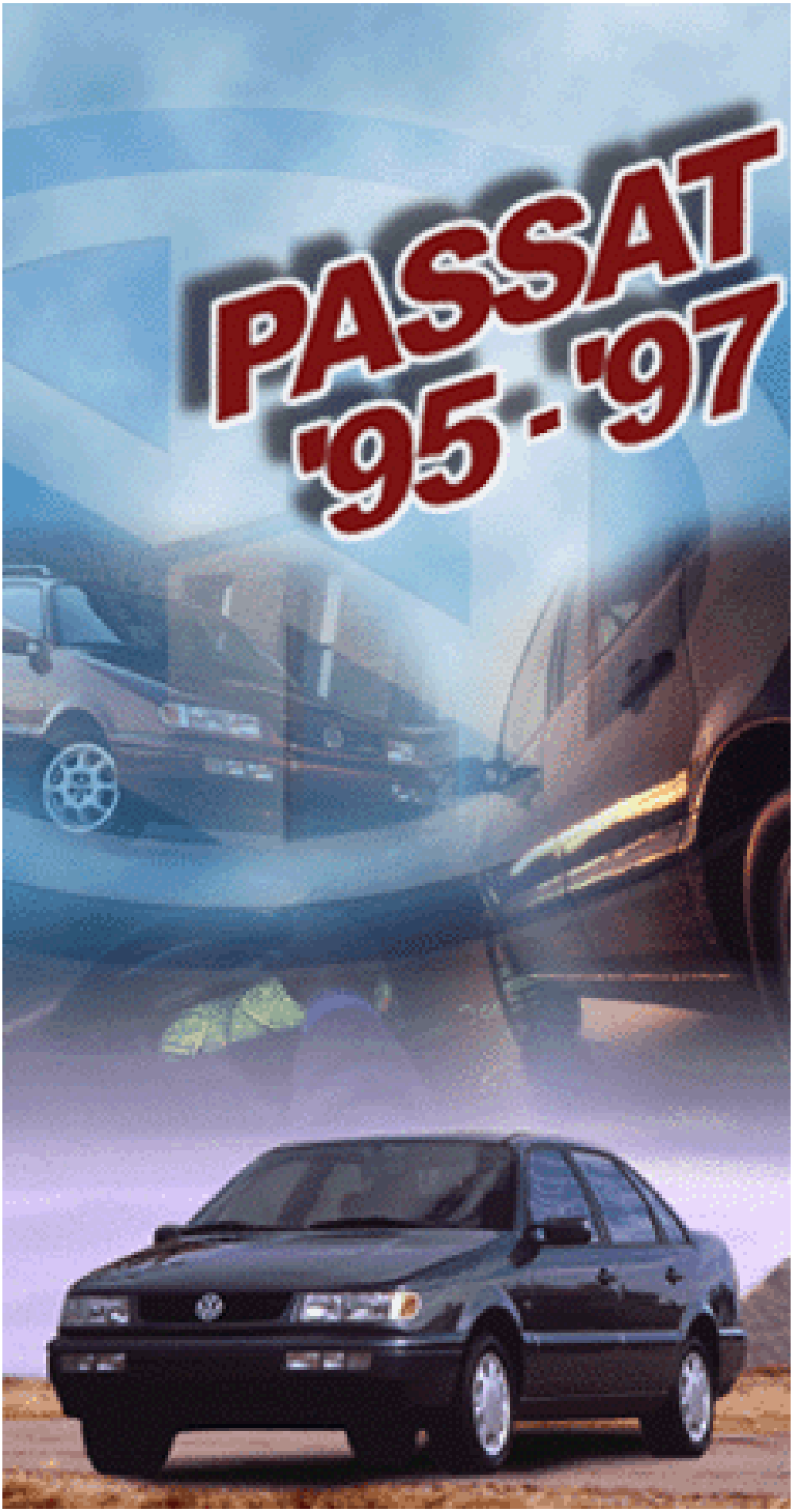

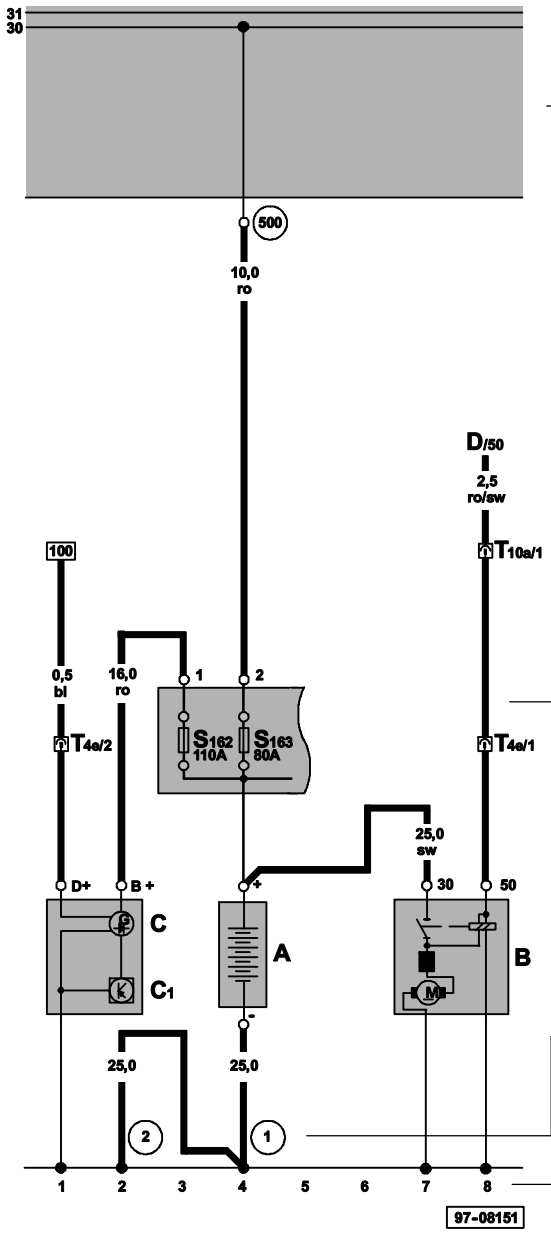

Relay panel
Indicated by grey area.

WIRING COLOR CODE		
ws	=	white
sw	=	black
ro	=	red
br	=	brown
gn	=	green
bl	=	blue
gr	=	grey
li	=	lilac
ge	=	yellow

Consumer circuit with wire routing
All switches and contacs are shown in the "off" position.

Vehicle ground
Numbers in circle indicate location on vehicle (see legend).

Current track number
Makes it easier to find the connections.

A - Battery
B - Starter
C - Generator (GEN)
C1 - Voltage Regulator (VR)
D - Ignition/Starter Switch
S162 - Fuse -1- (30) in fuse bracket / battery
S163 - Fuse -2- (30) in fuse bracket / battery
T4e - 4-Pin Connector, on transmission
T10a - 10-Pin Connector, on protective housing for control module, in engine compartment, left
(1) - Ground strap, battery to body
(2) - Ground strap, transmission to body
(500) - Screw connection -1- (30), on relay panel

Legend
In all wiring diagrams the same component designation (code) is used for a particular component; for example, always A for battery.

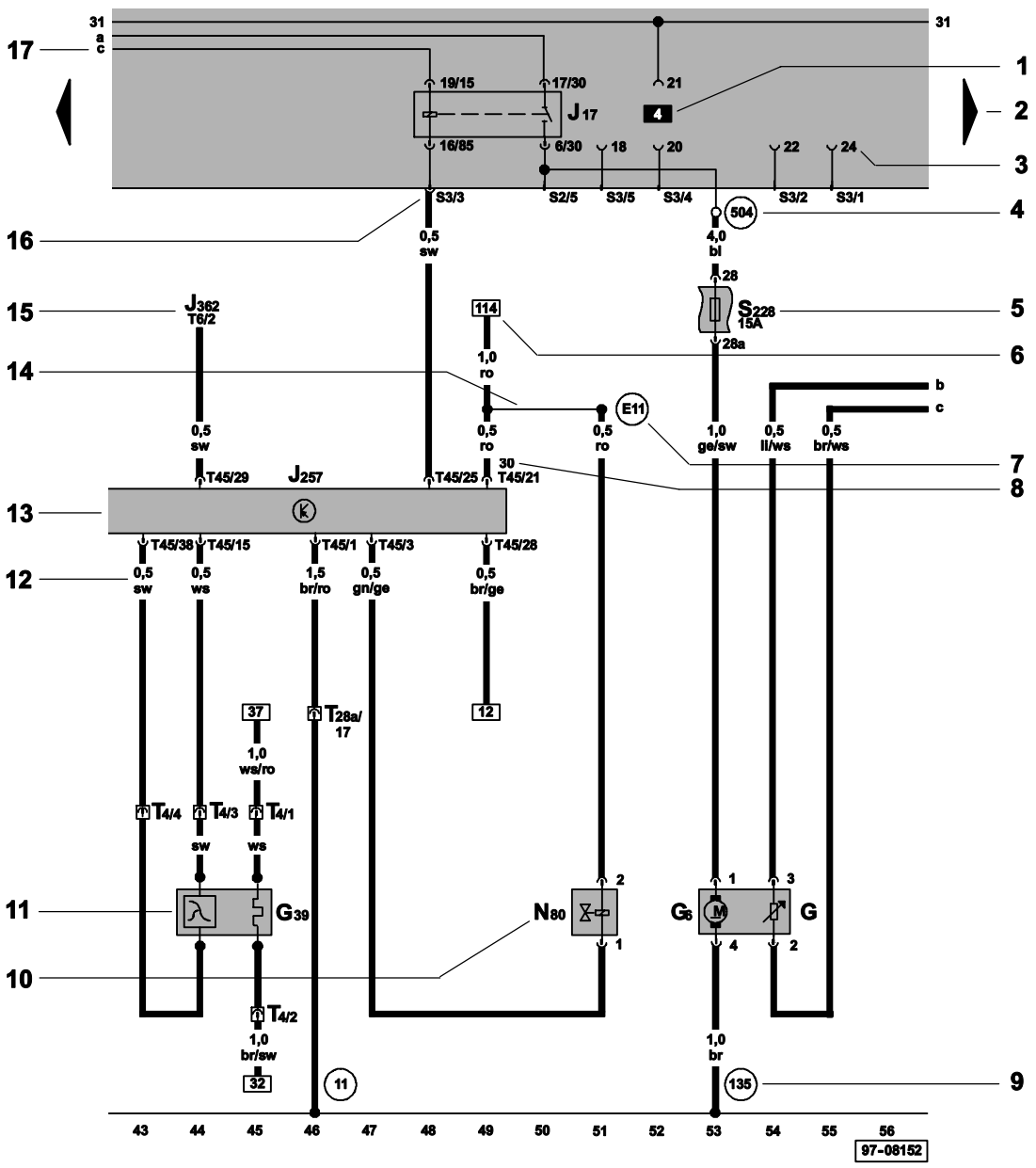
31
a
c
17
19/15
17/30
21
J17
4
16/85
6/30
18
20
22
24
S3/3
S2/5
S3/5
S3/4
S3/2
S3/1
504
0,5
sw
4,0
bl
28
S228
15A
28a
J362
T6/2
114
1,0
ro
E11
b
c
0,5
sw
0,5
ro
0,5
ro
1,0
ge/sw
0,5
ll/ws
0,5
br/ws
T45/29
J257
T45/25
30
T45/21
T45/38
T45/15
T45/1
T45/3
T45/28
0,5
sw
0,5
ws
1,5
br/ro
0,5
gn/ge
0,5
br/ge
37
T28a/
17
12
1,0
ws/ro
T4/4
T4/3
T4/1
sw
ws
G39
N80
G6
G
T4/2
1,0
br/sw
32
11
1,0
br
135
43
44
45
46
47
48
49
50
51
52
53
54
55
56
97-08152
1
2
3
4
5
6
7
8
9
10
11
12
13
14
15
16
17

1 - **Relay location number**
Indicates location on relay panel.

2 - **Arrow**
Indicates wiring circuit is continued on the previous and/or next page.

3 - **Connection designation - relay control module on relay panel**
Shows the individual terminals in a multi-point connector.
For example: contact 24 on terminal 4 on relay panel.

4 - **Diagram of threaded pin on relay panel**
White circle shows a detachable connection.

5 - **Fuse designation**
For example: S228 = Fuse number 28, 15 amps, in fuse holder

6 - **Reference of wire continuation (current track number)**
Number in frame indicates current track where wire is continued.

7 - **Wire connection designation in wiring harness**
Location of wire connections are indicated in the legend.

8 - **Terminal designation**
Designation which appears on actual component and/or terminal number of a multi-point connector.

9 - **Ground connection designation in wire harness**
Locations of ground connections are indicated in legend.

10 - **Component designation**
Use legend at bottom of page to identify the component code.

11 - **Component symbols (see page IV - VI)**

12 - **Wire cross-section size (in mm^2) and wire colors**
Abbreviations are explaining in color chart beside the wiring diagram.

13 - **Component symbol with open drawing side**
Indicated component is continued on another wiring diagram. The number of corresponding wiring diagram can taken from list of contents.

14 - **Internal connections (thin lines)**
These connections are **not** wires. Internal connections are current carrying and are listed to allow tracing of current flow inside components and wiring harness.

15 - **Reference of continuation of wire to component**
For example: Control module for anti-theft immobilizer J362 on 6-Pin Connector, terminal 2

16 - **Relay panel connectors**
Shows wiring of multi-point or single connectors on relay panel
For example: S3/3 - Multi-point connector S3, terminal 3

17 - **Reference of internal connection continuation**
Letters indicate where connection continues on the previous and/or next page.

Symbols used in wiring diagrams

Fuse

Thermo-fuse
(Circuit Breaker)

Battery

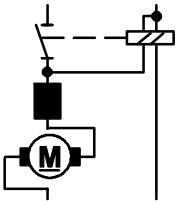

Starter

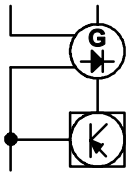

Generator (GEN)

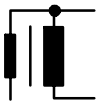

Ignition Coil

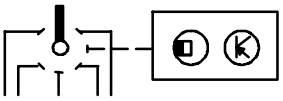

Distributor (electronic)

Spark plug connector
and plug

Glow plug
Heater element

Switch
(manually operated)

Switch
(thermally operated)

Push putton switch
(manually operated)

Switch
(mechanically operated)

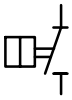

Switch
(pressure operated)

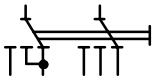

Multiple switch
(manually operated)

Resistance

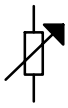

Variable resistor
(Rheostat)

Resistor
temperature dependent

Heater element
temperature dependent

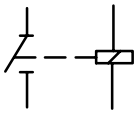

Relay

97-12201

	Diode		Solenoid valve
	Zener diode		Magnetic clutch
	Diode light sensitiv		Wire connector
	Light bulb		Pin connector
	Light bulb (dual filament)		Multi-point connector at component
	LED		Internal connections in component
	Interior light		Wire connection detachable
	Instrument (Gauge)		Wire connection fixed
	Electronic control module		Wire connection in wiring harness
	Rear window defogger heat element		Resistance wire
	Cigarette lighter		Shield wire

97-08153

Symbols used in wiring diagrams

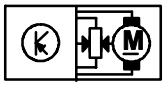

Control motor,
headlight range adjustment

Motor

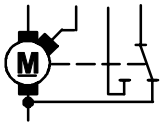

Wiper motor
2-speed

Crankshaft position sensor
(CKP)

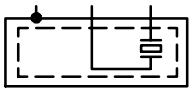

Knock sensor (KS)

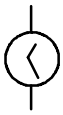

Analog clock

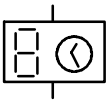

Digital clock

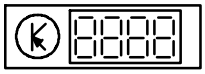

Multi-function
indicator

Airbag spiral spring

Speed sensor

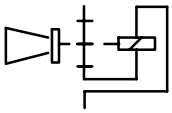

Horn

Speeker

Antenna with electronic
antenna amplifier

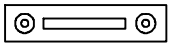

Radio

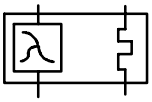

Heated oxygen sensor

97-08154

Starting with the reported problem, troubleshooting procedures show step-by-step **what** is checked and **how** it is checked in order to find the problem in the quickest and most reliable way. If several causes (of a problem) are possible in one system, a test procedure is used for diagnosis.

Structure of a Test step:

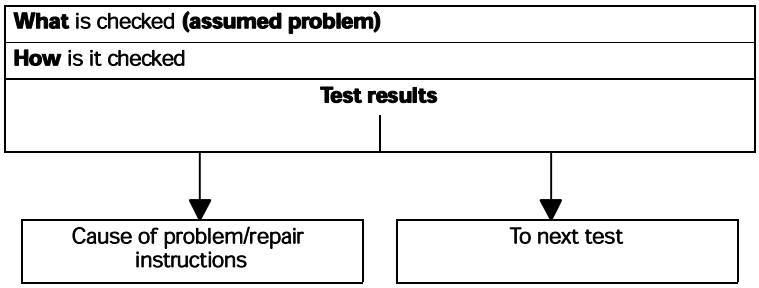

Example of a troubleshooting procedure:

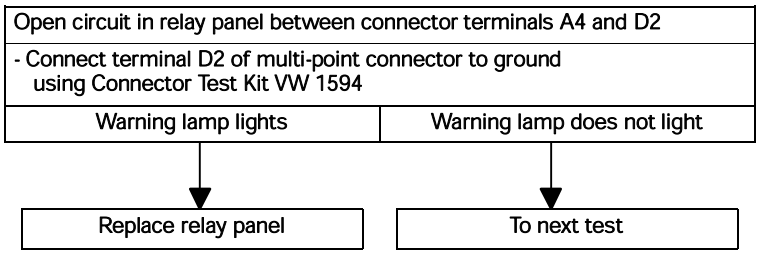

Passat (2.8L-Engine - Motronic Multiport Fuel Injection (MFI)/128kW), code AAA, from August 1995

	Diagram Title	Num/Page
-	Passat (2.8L-Engine - Motronic Multiport Fuel Injection (MFI)/128kW), code AAA, from August 1995	31/01
-	Battery, ignition/starter switch	34/02
-	Fresh air blower	34/03
-	Coolant fan, two speeds	03/01
-	Generator (GEN), starter, fuel pump (FP), fuel level sensor	31/02
-	Ignition system, motronic engine control module (ECM), heated oxygen sensor (HO2S)	31/03
-	Motronic engine control module (ECM), knock sensors, engine coolant temperature (ECT) sensor	31/04
-	Motronic engine control module (ECM) injectors, mass air flow (MAF) sensor	31/05
-	Motronic engine control module (ECM), throttle valve control module	31/06
-	Motronic engine control module (ECM), secondary air injection (AIR) system	31/07
-	Instrument cluster, engine coolant level/temperature (ECL/ECT) warning light, visual and acoustical oil presure control, odometer display, fuel gauge	31/09
-	Instrument cluster, tachometer	34/05
-	Instrument cluster, digital clock	34/06
-	Instrument cluster, outside air temperature sensor, parking brake warning light switch and brake fluid level warning light switch	34/07
-	Interior light, luggage compartment light, radio/parking light warning buzzer, seat belt warning system relay, door contact switch	34/08
-	Data Link Connector (DLC) wire connector, radio connection, cigarette lighter, ashtray light	34/09
-	Headlights, font side markers, headlight dimmer flasher switch	34/10
-	Turn signal and emergency flasher system, parking light switch	34/11
-	Tail lights, brake lights, turn signal lights	34/12
-	Light switch, right front turn signal light	34/13
-	Fog lights, license plate lights, back-up lights	34/14
-	Rear window defogger heat element, dual horns	34/15
-	Windshield wiper/washer system	34/16
-	Rear window wiper/washer system, ABS warning light, airbag malfunction indicator lamp (MIL), brake and parking brake warning light	34/17

Passat (2.0L-Engine - Motronic Multiport Fuel Injection (MFI)/85kW), code ABA, from August 1995

	Diagram Title	Num/Page
-	Passat (2.0L-Engine - Motronic Multiport Fuel Injection (MFI)/85kW), code ABA, from August 1995	30/01
-	Battery, ignition/starter switch	34/02
-	Fresh air blower	34/03
-	Coolant fan, two speeds	03/01
-	Generator (GEN), starter, fuel pump (FP), fuel level sensor	30/02
-	Motronic engine control module (ECM), heated oxygen sensor (HO2S), heated oxygen sensor (HO2S) 2, fuel pump (FP) relay	30/03
-	Motronic engine control module (ECM), knock sensor (KS), throttle valve control module, engine coolant temperature (ECT) sensor, intake air temperature (IAT) sensor	30/04
-	Motronic engine control module (ECM), injectors, mass air flow (MAF) sensor	30/05
-	Motronic engine control module (ECM), engine speed (RPM) sensor, evaporative emission (EVAP) canister purge regulator valve, secondary air injection (AIR) pump motor, secondary air injection (AIR) pump relay	30/06
-	Speedometer vehicle speed sensor (VSS), outside air temperature sensor, oil temperature sensor, oil pressure switch	30/07
-	Instrument cluster, engine coolant level/temperature (ECL/ECT) warning light, visual and acoustical oil pressure control, fuel gauge, odometer display	30/08
-	Instrument cluster, speedometer, multi-function indicator memory switch	30/09
-	Instrument cluster, tachometer	34/05
-	Instrument cluster, digital clock	34/06
-	Instrument cluster, outside air temperature sensor, parking brake warning light switch and brake fluid level warning light switch	34/07
-	Interior light, luggage compartment light, radio/parking light warning buzzer, seat belt warning system relay, door contact switch	34/08
-	Data Link Connector (DLC) wire connector, radio connection, cigarette lighter, ashtray light	34/09
-	Headlights, font side markers, headlight dimmer flasher switch	34/10
-	Turn signal and emergency flasher system, parking light switch	34/11
-	Tail lights, brake lights, turn signal lights	34/12
-	Light switch, right front turn signal light	34/13
-	Fog lights, license plate lights, back-up lights	34/14
-	Rear window defogger heat element, dual horns	34/15
-	Windshield wiper/washer system	34/16
-	Rear window wiper/washer system, ABS warning light, airbag malfunction indicator lamp (MIL), brake and parking brake warning light	34/17

Passat (1.9L-Engine - Turbo Diesel Fuel Injection (DFI)/55kW), code 1Z, from August 1995

	Diagram Title	Num/Page
-	Passat (1.9L-Engine - Turbo Diesel Fuel Injection (DFI)/55kW), code 1Z, from August 1995	29/01
-	Battery, ignition/starter switch	34/02
-	Fresh air blower	34/03
-	Coolant fan, two speeds	04/01
-	Generator (GEN), starter	29/02
-	Diesel direct fuel injection (DFI) engine control module (ECM), engine speed (RPM) sensor, mass air flow (MAF) sensor, intake air temperature (IAT) sensor	29/03
-	Diesel direct fuel injection (DFI) engine control module (ECM), quantity adjuster, needle lift sensor, fuel temperature sensor, modulating piston displacement sensor	29/04
-	Diesel direct fuel injection (DFI) engine control module (ECM), power supply (terminal 30, B+) relay, spark plugs (coolant), throttle position (TP) sensor, EGR vacuum regulator solenoid valve	29/05
-	Diesel direct fuel injection (DFI) engine control module (ECM), glow plug (engine), fuel cut-off valve, cold start injector, wastegate bypass regulator valve	29/06
-	Speedodometer vehicle speed sensor (VSS), 0.3 bar oil pressure switch, outside air temperature sensor, engine coolant temperature (ECT) sensor, oil pressure switch	29/07
-	Instrument cluster, engine coolant level/temperature (ECL/ECT) warning light, visual and acoustical oil pressure control, fuel gauge, odometer display	29/08
-	Instrument cluster, speedometer, multi-function indicator memory switch	29/09
-	Battery, ignition/starter switch	34/02
-	Fresh air blower	34/03
-	Instrument cluster, fuel gauge, engine coolant level/temperature (ECL/ECT) warning light, visual and acoustical oil pressure control	34/04
-	Instrument cluster, tachometer	34/05
-	Instrument cluster, digital clock	34/06
-	Instrument cluster, outside air temperature sensor, parking brake warning light switch and brake fluid level warning light switch	34/07
-	Interior light, luggage compartment light, radio/parking light warning buzzer, seat belt warning system relay, door contact switch	34/08
-	Data Link Connector (DLC) wire connector, radio connection, cigarette lighter, ashtray light	34/09
-	Headlights, font side markers, headlight dimmer flasher switch	34/10
-	Turn signal and emergency flasher system, parking light switch	34/11
-	Tail lights, brake lights, turn signal lights	34/12
-	Light switch, right front turn signal light	34/13
-	Fog lights, license plate lights, back-up lights	34/14
-	Rear window defogger heat element, dual horns	34/15

- Windshield wiper/washer system 34/16
- Rear window wiper/washer system, ABS warning light, airbag malfunction indicator lamp (MIL), brake and parking brake warning light 34/17

Common Systems

	Diagram Title	Num/Page
-	Airbag, from October 1994	18/01
-	Air conditioning, 2.8L Engine-Motronic Multiport Fuel Injection (MFI)/128kW, code AAA, from August 1994	06/01
-	Air conditioning, 2.0L Engine-Motronic Multiport Fuel Injection (MFI)/85kW, code ABA, from February 1995	26/01
-	Air Conditioning, 1.9L Engine-Turbo Diesel Fuel Injection (DFI)/55kW, code AAZ, from August 1994	05/01
-	Air Conditioning, 1.9L Engine-Turbo Diesel Fuel Injection (DFI)/66kW, code 1Z, from December 1995	35/01
-	Anti-lock brake system (ABS) with electronic differntial lock (EDL), from August 1994	33/01
-	Automatic transmission, 2.8L Engine - Motronic Mulitport Fuel Injection (MFI)/128kW, code AAA, from August 1995	32/01
-	Automatic transmission, 2.8L Engine - Motronic Mulitport Fuel Injection (MFI)/85kW, code ABA, from August 1995	32/01
-	Automatic transmission, 1.9L Engine - Motronic Multiport Fuel Injection (DFI)/66kW, code 1Z, from August 1995	28/01
-	Central locking system and anti-theft alarm system, from August 1994	15/01
-	Coolant fan, three speeds, 450W, code AAZ, from August 1994	22/01
-	Coolant fan, three speeds, 450W, code AAA, from August 1994	21/01
-	Coolant fan, two speeds, 250W, code AAA, from August 1994	03/01
-	Coolant fan, two speeds, 250W, code AAZ, from August 1994	04/01
-	Cruise control, not for code 1Z, from August 1994	14/01
-	Cruise control, only for code 1Z, from August 1994	29/04
-	Daytime running lights only Canada, from August 1994	23/01
-	Dual horns, from August 1994	34/15
-	Front and rear power windows, from August 1994	07/01
-	Heated seats, from August 1994	08/01
-	Heated power mirrors, from August 1994	10/01
-	Heated washer nozzles, from August 1994	11/01
-	Interior light with delay switch, rear reading lights, make-up mirror lights from August 1994	09/01
-	Power sunroof, from August 1994	16/01
-	Rear window wiper/washer system, from August 1995	34/17
-	Stereo radio with CD-changer and eight speakers, from August 1994	20/01
-	Trunk lid release, sedan only, from August 1994	12/01

Coolant fan, two speeds, 250W,code AAA,

from August 1994

Relay location
For relay location and multiple connectors see also section "component locations".

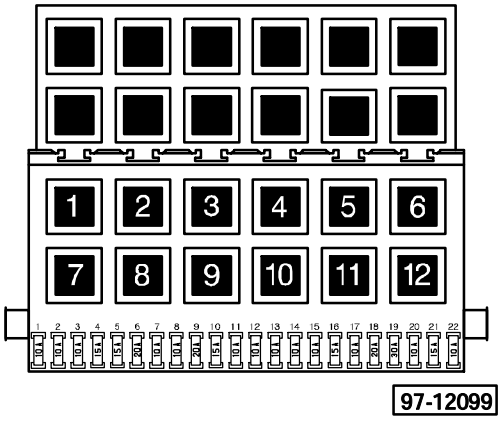

Fuse colors

30A – green
25A – white
20A – yellow
15A – blue
10A – red

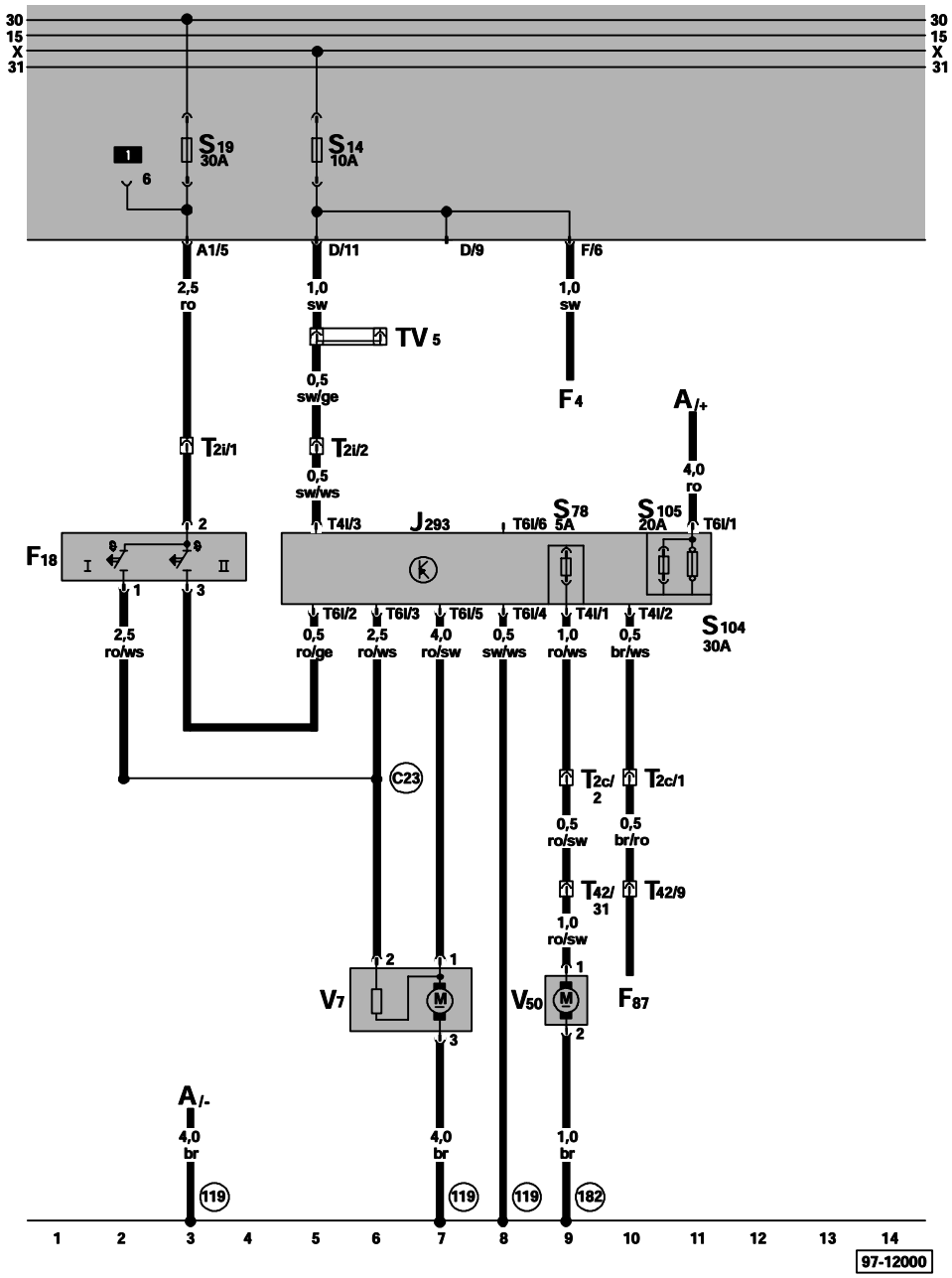

ws = white
sw = black
ro = red
br = brown
gn = green
bl = blue
gr = grey
li = violet
ge = yellow

A – Battery
F4 – Back-Up Light Switch
F18 – Coolant Fan Control (FC) Thermal Switch
F87 – After-Run Coolant Fan Control (FC) Thermal Switch
J293 – Coolant FC (Fan Control) Control Module, in engine compartment, left
S78 – Engine Coolant Pump Fuse
S104 – Second Speed Coolant Fan Fuse
S105 – First Speed Coolant Fan fuse
T2c – Double Connector, behind fuse/relay panel
T2i – Double Connector, behind fuse/relay panel
T4i – 4-Pin Connector, on Coolant FC (Fan Control) Control Module
T6i – 6-Pin Connector, on Coolant FC (Fan Control) Control Module
T42 – 42-Pin Connector, on left cylinder head
TV5 – Terminal 15a Wire Connector, above fuse/relay panel
V7 – Coolant Fan
V50 – Coolant Pump

119 – Ground connection –1–, in cooling fan wiring harness

182 – Ground connection –1–, in engine compartment wiring harness (6 Cylinder)

C23 – Wire connection (blower, 1st speed), in cooling fan wiring harness

Coolant fan, two speeds, 250W,code AA ,

from August 1994

Relay location
For relay location and multiple connectors see also section "component locations".

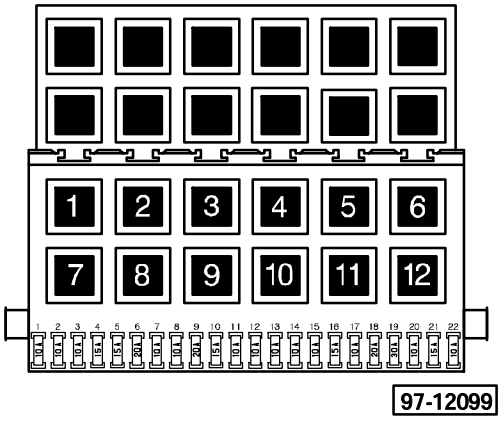

Fuse colors

30A – green
25A – white
20A – yellow
15A – blue
10A – red

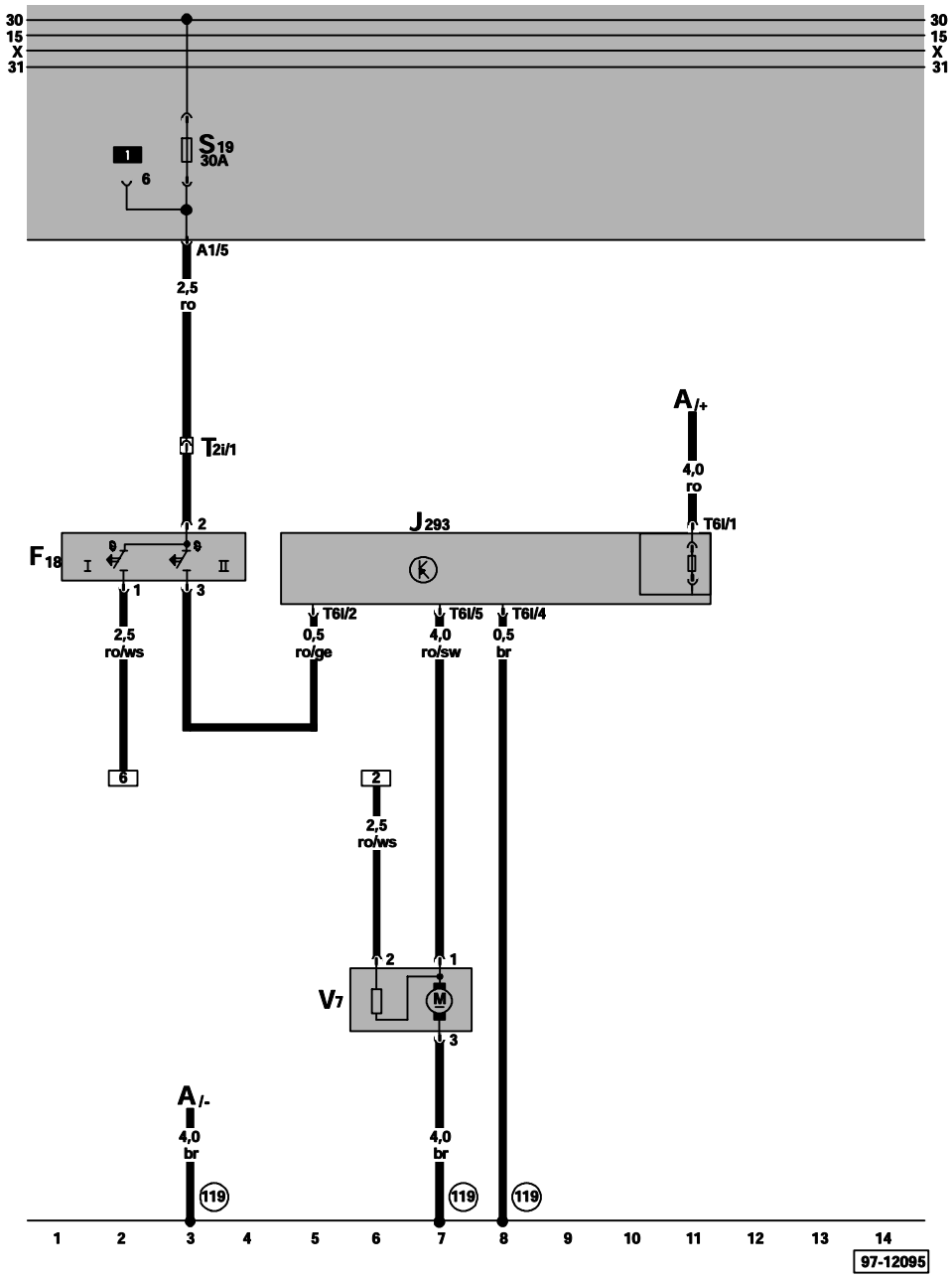

ws = white
sw = black
ro = red
br = brown
gn = green
bl = blue
gr = grey
li = violet
ge = yellow

A – Battery
F18 – Coolant Fan Control (FC) Thermal Switch
J293 – Coolant FC (Fan Control) Control Module, in engine compartment,left
S104 – Second Speed Coolant Fan Fuse
T2i – Double Connector, behind fuse7relay panel
T6l – 6-Pin Connector, on Coolant FC (Fan Control) Control Module
V7 – Coolant Fan

(119) – Ground connection –1–, in cooling fan wiring harness

Air conditioning,
D 1.9l Engine ur o iesel Fuel n ection F /55 W, code AA ,

from August 1994

Relay location
For relay location and multiple connectors see also section "component locations".

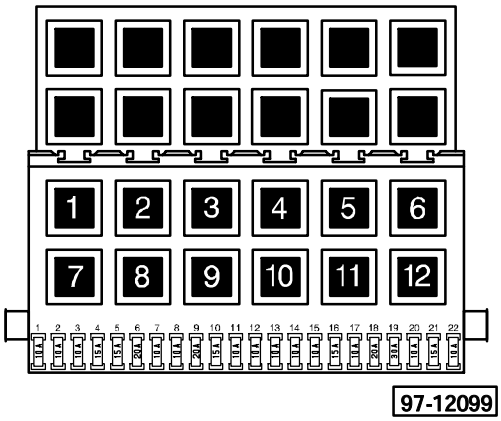

Fuse colors

30A – green
25A – white
20A – yellow
15A – blue
10A – red

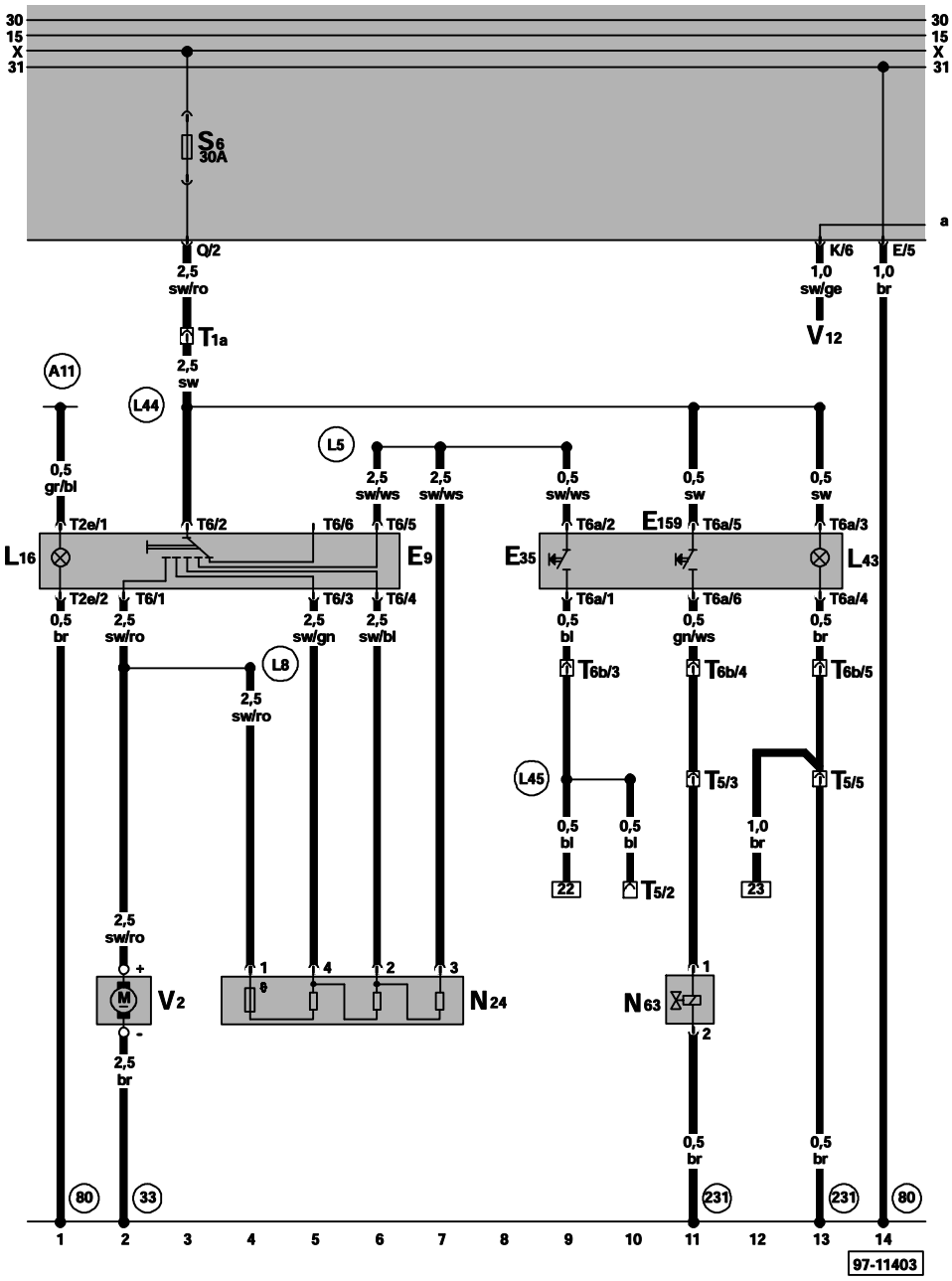

ws = white
sw = black
ro = red
br = brown
gn = green
bl = blue
gr = grey
li = violet
ge = yellow

E9 – Fresh Air Blower Switch
E35 – A/C Switch
E159 – Fresh Air/Recirculating Flap Switch
L16 – Fresh Air Control Lever Light
L43 – A/C Switch Illumination Light
N24 – Fresh Air Blower Series Resistance With Fuse
N63 – Fresh Air/Recirculating Flap Two-Way Valve (00605)
T1a – Single Connector, behind fuse/relay panel
T2e – Double Connector
T5 – 5-Pin Connector, behind fuse/relay panel
T6 – 6-Pin Connector
T6a – 6-Pin Connector
T6b – 6-Pin Connector, behind instrument panel, center
V2 – Fresh Air Blower
V12 – Rear Window Wiper Motor
33 – Ground connection, behind instrument panel, right
80 – Ground connection –1–, in instrument panel wiring harness
231 – Ground connection, in A/C system–coolant fan wiring harness
A11 – Plus connection (58b) in instrument panel wiring harness
L5 – Wire connection –1–, in evaporator housing wiring harness
L8 – Wire connection –4–, in evaporator housing wiring harness
L44 – Wire connection (X), in A/C system wiring harness
L45 – Wire connection, in A/C system wiring harness

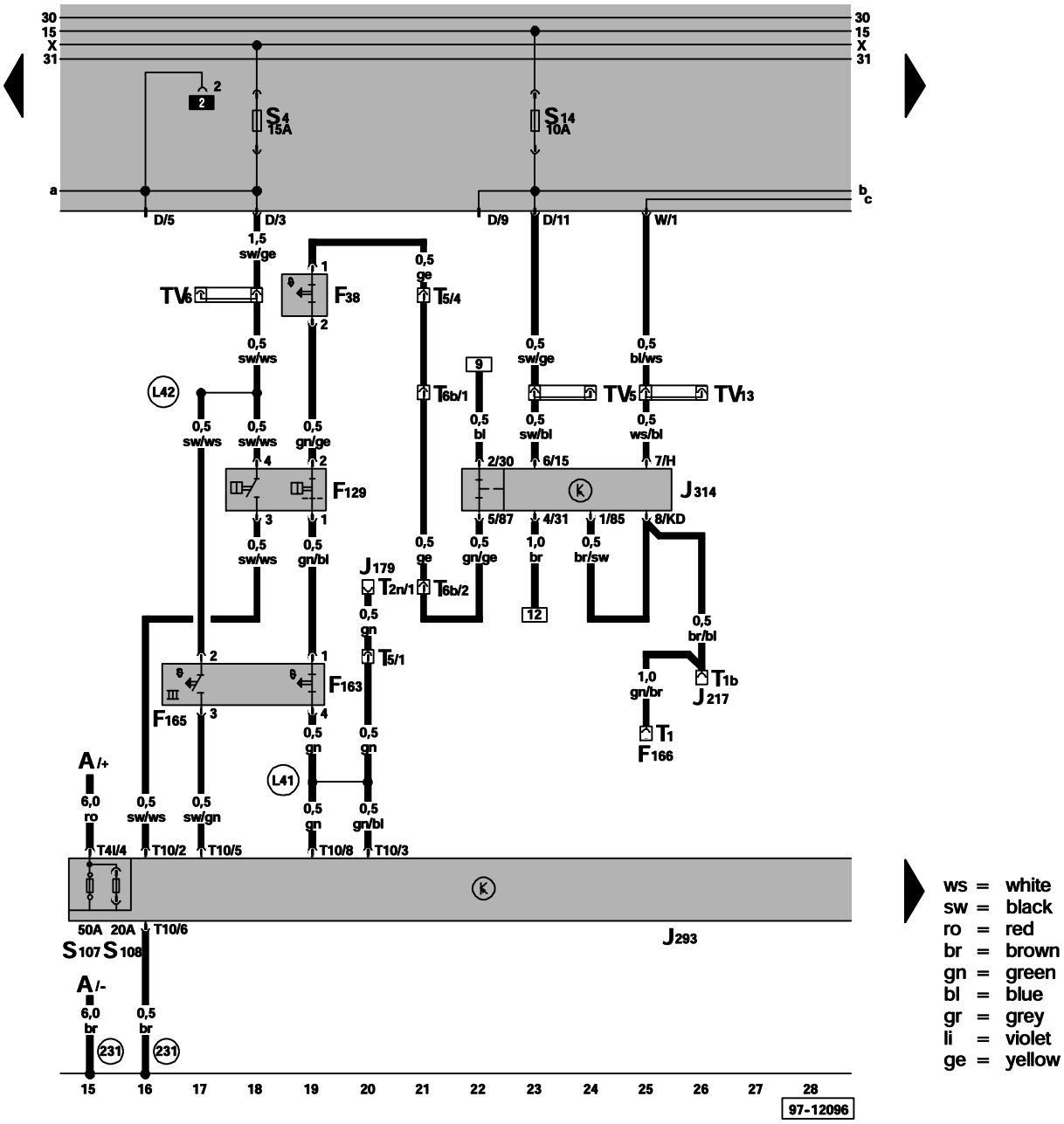

ws = white
sw = black
ro = red
br = brown
gn = green
bl = blue
gr = grey
li = violet
ge = yellow

A – Battery
F38 – Ambient Temperature Switch, in plenum chamber, right
F129 – A/C Pressure Switch
F163 – A/C Cut-Out Thermal Switch
F165 – Third Speed Coolant Fan Control (FC) Thermal Switch
F166 – EGR Part Throttle Switch
J179 – Automatic Glow Time Control Module
J217 – Transmission Control Module (TCM)
J293 – Coolant Fan Control (FC) Control Module
J314 – A/C Cut-Off Control Module, behind console, vehicles with automatic transmission:
J246 – A/C Clutch Cut-Off Relay
S107 – Coolant Fan Second and Third Speed Fuse
S108 – Coolant Fan First Speed and A/C Clutch Fuse
T1 – Single Connector, behind fuse/relay panel
T1b – Single Connector, behind fuse/relay panel
T2n – Double Connector, behind fuse/relay panel
T5 – 5–Pin Connector, behind fuse/relay panel
T6b – 6–Pin Connector, behind instrument panel, center
TV5 – Terminal 15a Wire Connector
TV6 – Terminal X Wire Connector
TV13 – Vehicle Speed Signal Wire Connector
V12 – Rear Window Wiper Motor
V50 – Coolant Pump

231 – Ground connection, in A/C system–coolant fan wiring harness

L41 – Wire connection (A/C on), in A/C system–coolant fan wiring harness

L42 – Wire connection (X), in A/C system–coolant fan wiring harness

A/C pressure switch, ambient temperature switch, coolant fan control (FC) control module, A/C cut-off

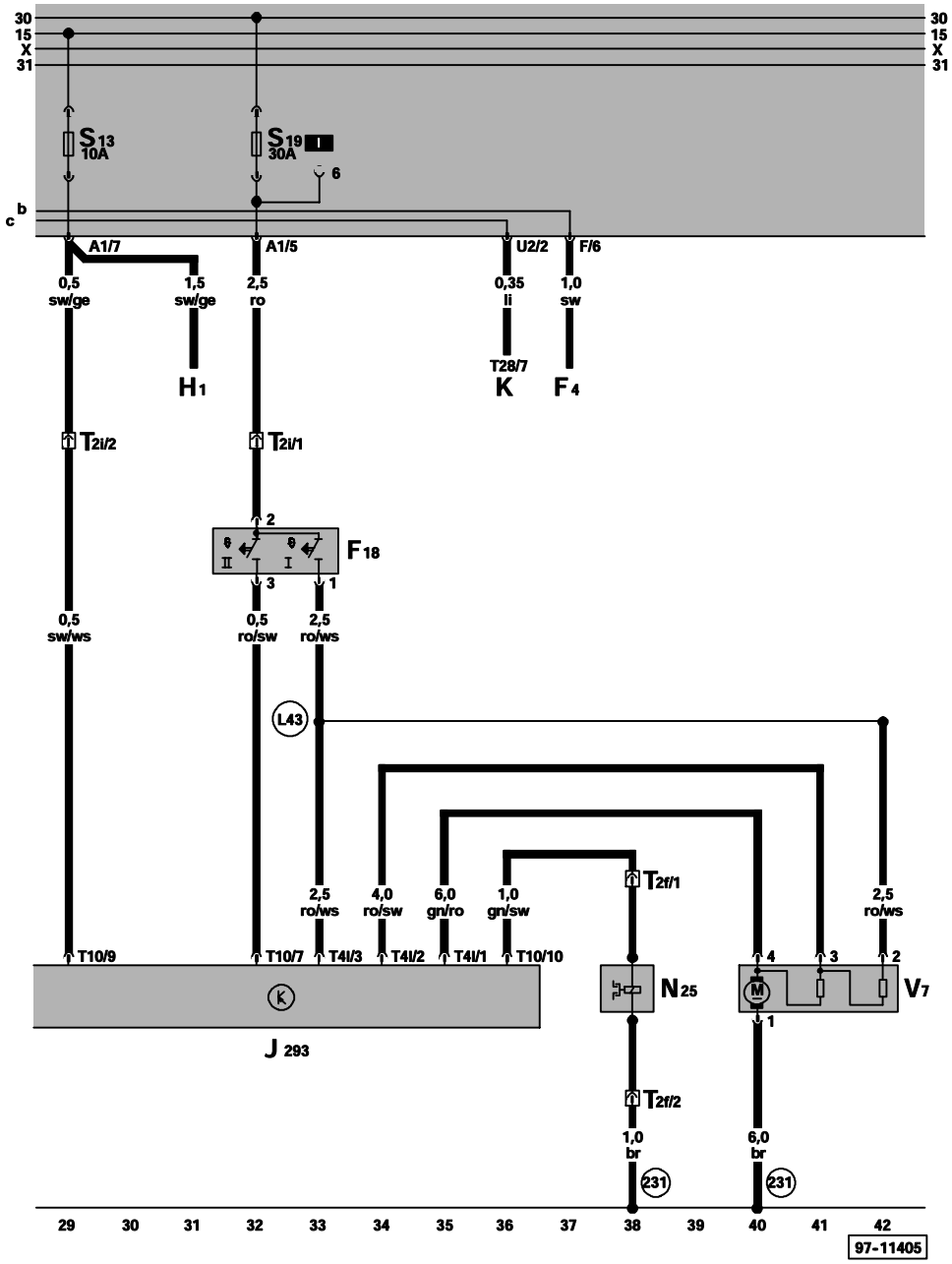

ws = white
sw = black
ro = red
br = brown
gn = green
bl = blue
gr = grey
li = violet
ge = yellow

F4 – Back-Up Light Switch
F18 – Coolant Fan Control (FC) Thermal Switch
H1 – Dual Horns
J293 – Coolant Fan Control (FC) Control Module, in engine compartment, left
K – Instrument Cluster
N25 – A/C Clutch
T2f – Double Connector, near compressor
T2i – Double Connector, behind fuse/relay panel
T4l – 4-Pin Connector, on Coolant Fan Control (FC) Control Module
T10 – 10-Pin Connector, on Coolant Fan Control (FC) Control Module
T28 – 28-Pin Connector, on instrument cluster
V7 – Coolant Fan

(231) – Ground connection, in A/C system-coolant fan wiring harness

(L43) – Wire connection (coolant fan), in A/C system-coolant fan wiring harness

Air conditioning,
D 2.8l Engine otronic ultiport Fuel n ection F / 128 W, code AAA,

from August 1994

Relay location
For relay location and multiple connectors see also section "component locations".

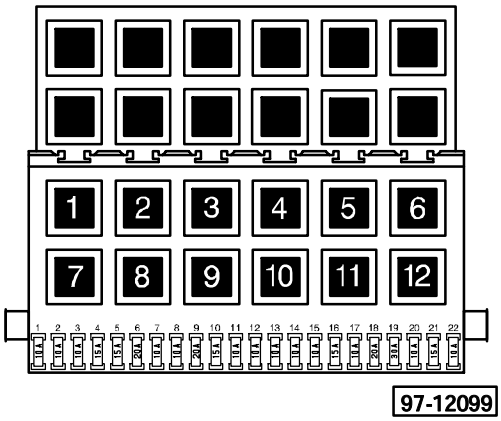

Fuse colors

30A – green
25A – white
20A – yellow
15A – blue
10A – red

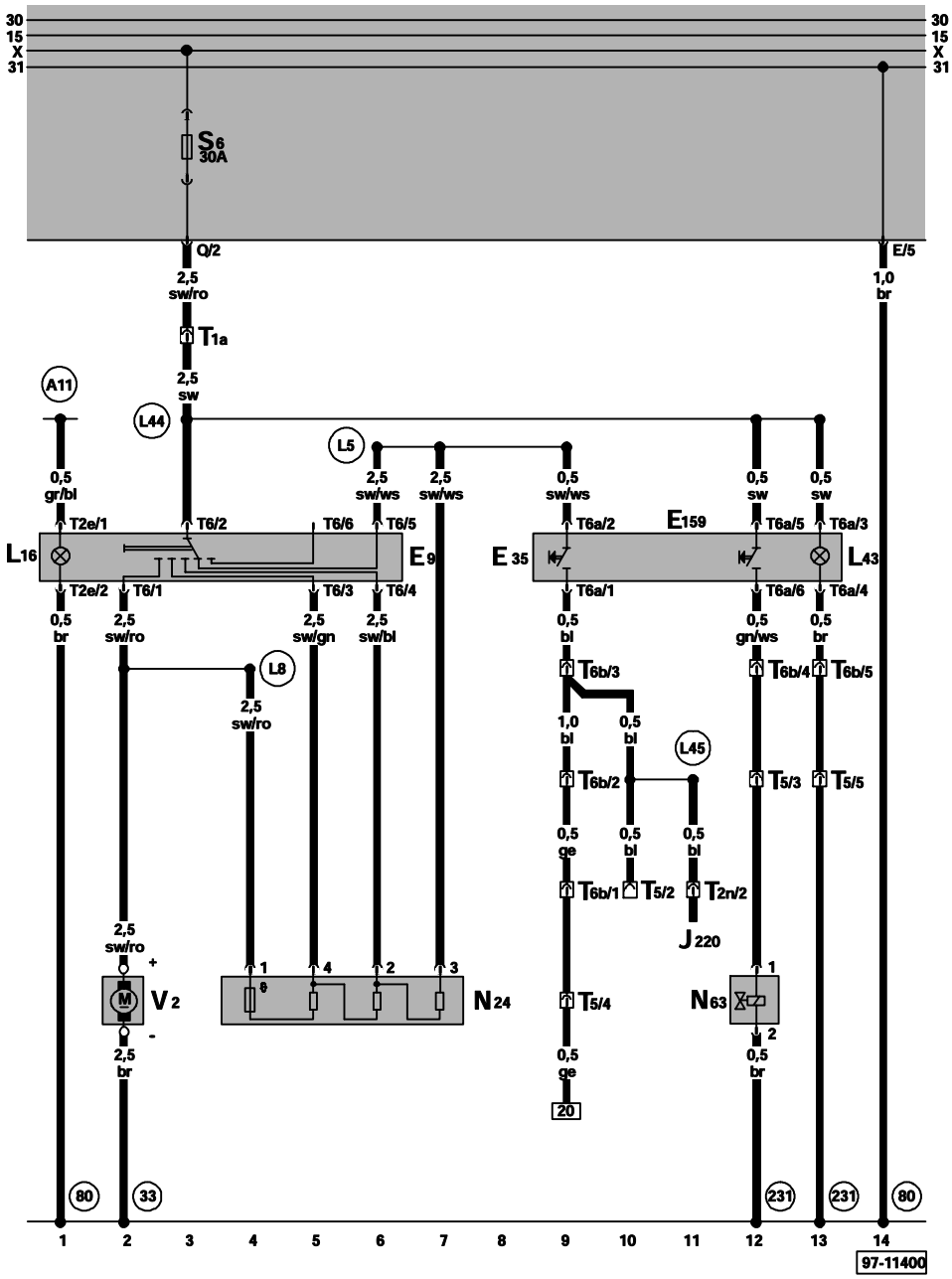

ws = white
sw = black
ro = red
br = brown
gn = green
bl = blue
gr = grey
li = violet
ge = yellow

E9 – Fresh Air Blower Switch
E35 – A/C Switch
E159 – Fresh Air/Recirculating Flap Switch
L16 – Fresh Air Control Lever Light
L43 – A/C Switch Illumination Light
N24 – Fresh Air Blower Series Resistance With Fuse
N63 – Fresh Air/Recirculating Flap Two-Way Valve
T1a – Single Connector, behind fuse/relay panel
T2e – Double Connector
T5 – 5-Pin Connector, behind fuse/relay panel
T6 – 6-Pin Connector
T6a – 6-Pin Connector
T6b – 6-Pin Connector, behind instrument panel, center
V2 – Fresh Air Blower

33 – Ground connection, behind instrument panel, right

80 – Ground connection –1–, in instrument panel wiring harness

231 – Ground connection, in A/C system–coolant fan wiring harness

A11 – Plus connection (58b) in instrument panel wiring harness

L5 – Wire connection –1–, in evaporator housing wiring harness

L8 – Wire connection –4–, in evaporator housing wiring harness

L44 – Wire connection (X), in A/C system wiring harness

L45 – Wire connection, in A/C system wiring harness

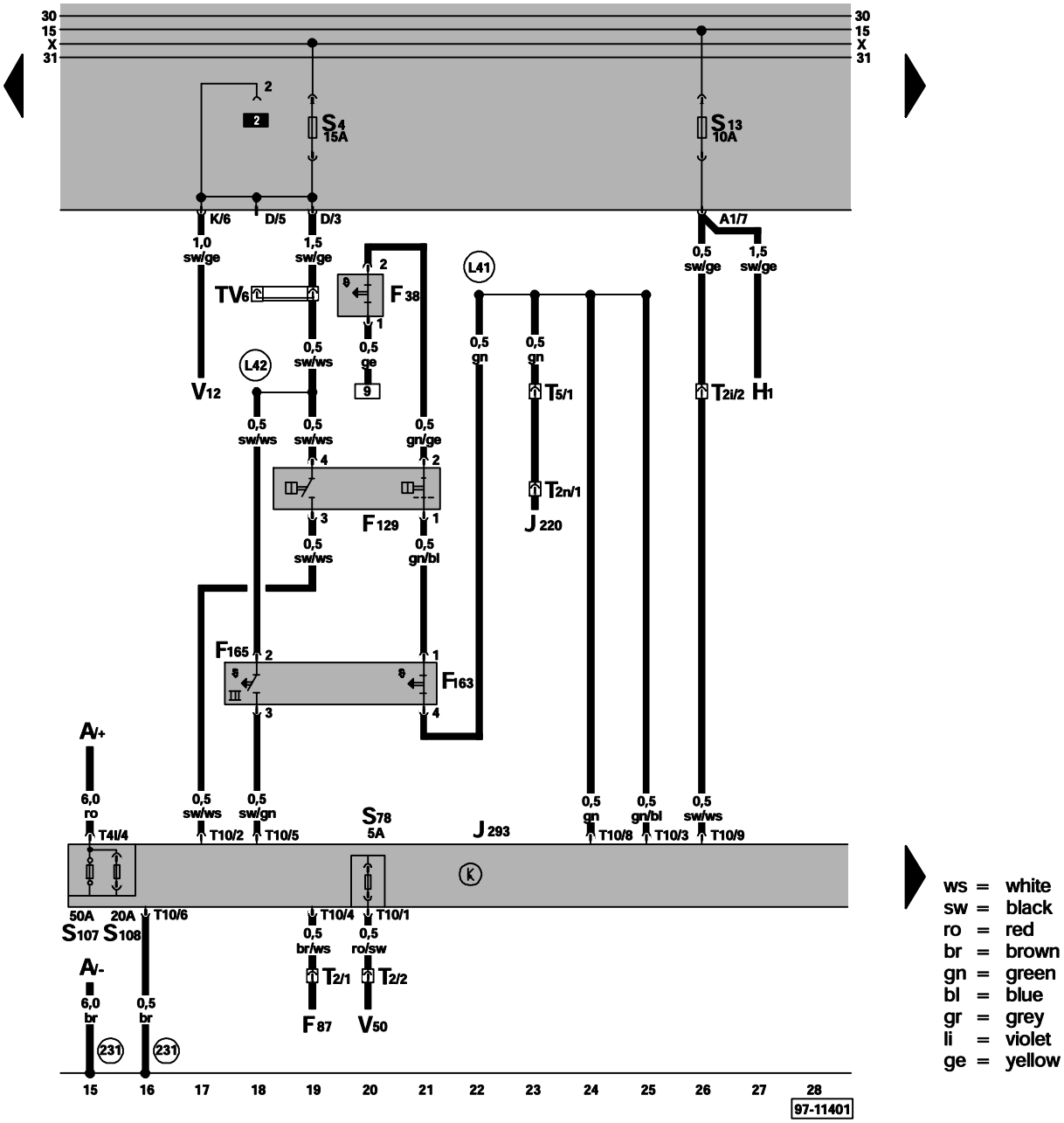

ws = white
sw = black
ro = red
br = brown
gn = green
bl = blue
gr = grey
li = violet
ge = yellow

A – Battery
F38 – Ambient Temperature Switch, in plenum chamber, right
F129 – A/C Pressure Switch
F163 – A/C Cut-Out Thermal Switch
F165 – Third Speed Coolant Fan Control (FC) Thermal Switch
H1 – Dual Horns
J220 – Motronic Engine Control Module (ECM)
J293 – Coolant Fan Control (FC) Control Module, in engine compartment, left
S107 – Coolant Fan Second and Third Speed Fuse
S108 – Coolant Fan First Speed and A/C Clutch Fuse
T2 – Double Connector, behind fuse/relay panel
T2n – Double Connector, behind fuse/relay panel
T4l – 4-Pin Connector, on Coolant Fan Control (FC) Control Module
T5 – 5-Pin Connector, behind fuse/relay panel
T10 – 10-Pin connector, on Coolant Fan Control (FC) Control Module
TV6 – Terminal X Wire Connector
V12 – Rear Window Wiper Motor
V50 – Coolant Pump

(231) – Ground connection, in A/C system–coolant fan wiring harness
(L41) – Wire connection (A/C on), in A/C system-coolant fan wiring harness
(L42) – Wire connection (X), in A/C system-coolant fan wiring harness

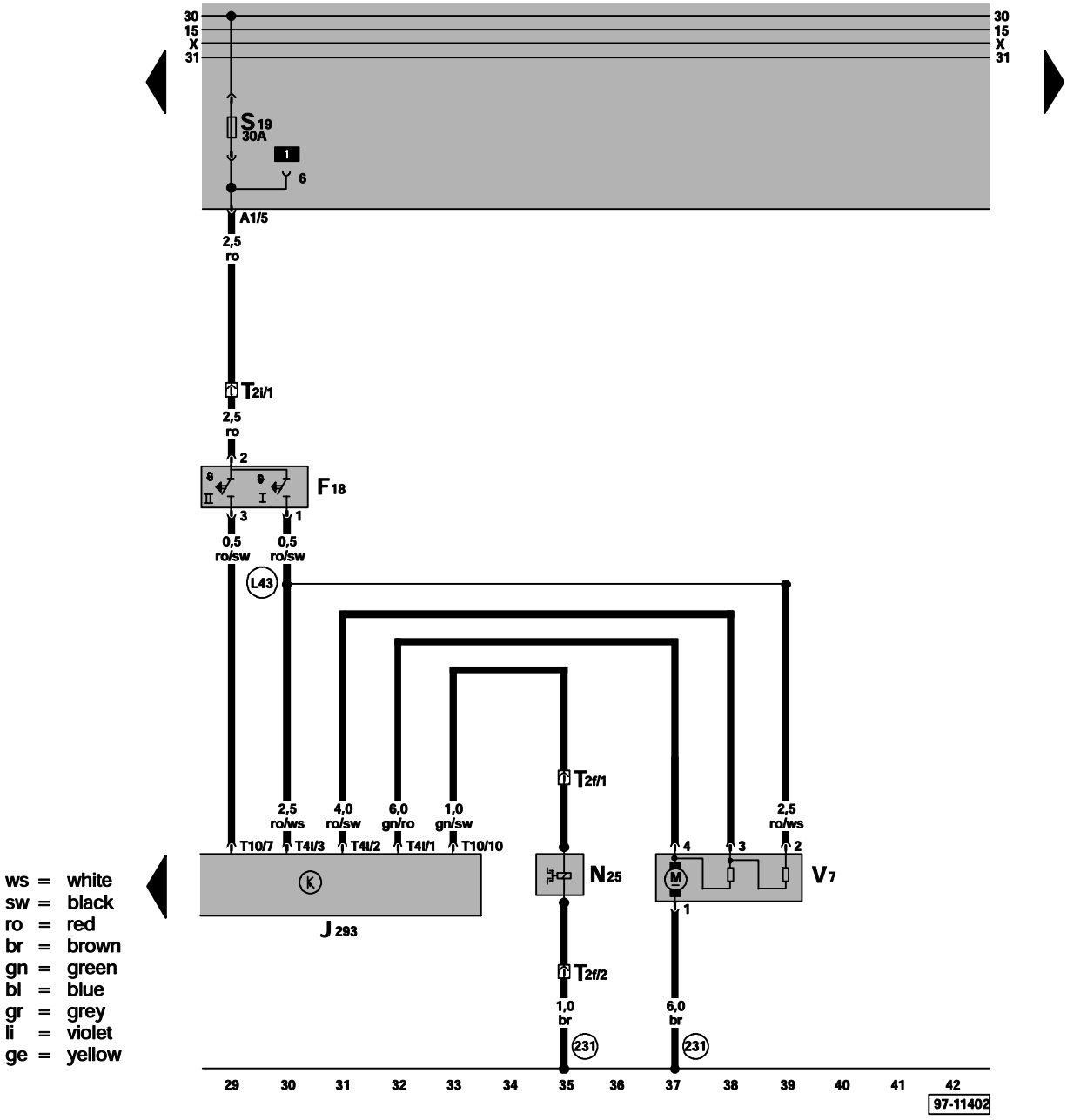

ws = white
sw = black
ro = red
br = brown
gn = green
bl = blue
gr = grey
li = violet
ge = yellow

F18 – Coolant Fan Control (FC) Thermal Switch
J293 – Coolant Fan Control (FC) Control Module, in engine compartment, left
N25 – A/C Clutch
T2f – Double Connector, near compressor
T2i – Double Connector, behind fuse/relay panel
T4l – 4-Pin Connector, on Coolant Fan Control (FC) Control Module
T10 – 10-Pin Connector, on Coolant Fan Control (FC) Control Module
T28 – 28-Pin Connector, on instrument cluster
V7 – Coolant Fan

(231) – Ground connection, in A/C system-coolant fan wiring harness

(L43) – Wire connection (coolant fan), in A/C system-coolant fan wiring harness

Front and rear power windows,

from August 1994

Relay location
For relay location and multiple connectors see also section "component locations".

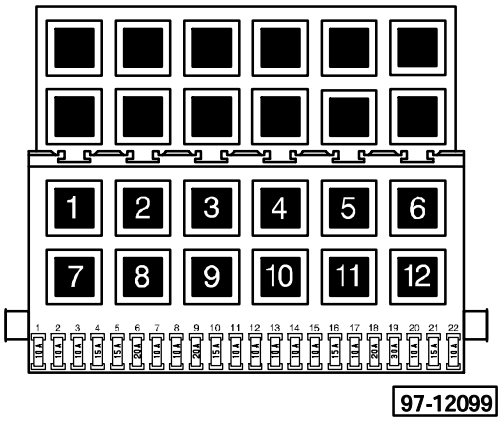

Fuse colors

30A – green
25A – white
20A – yellow
15A – blue
10A – red

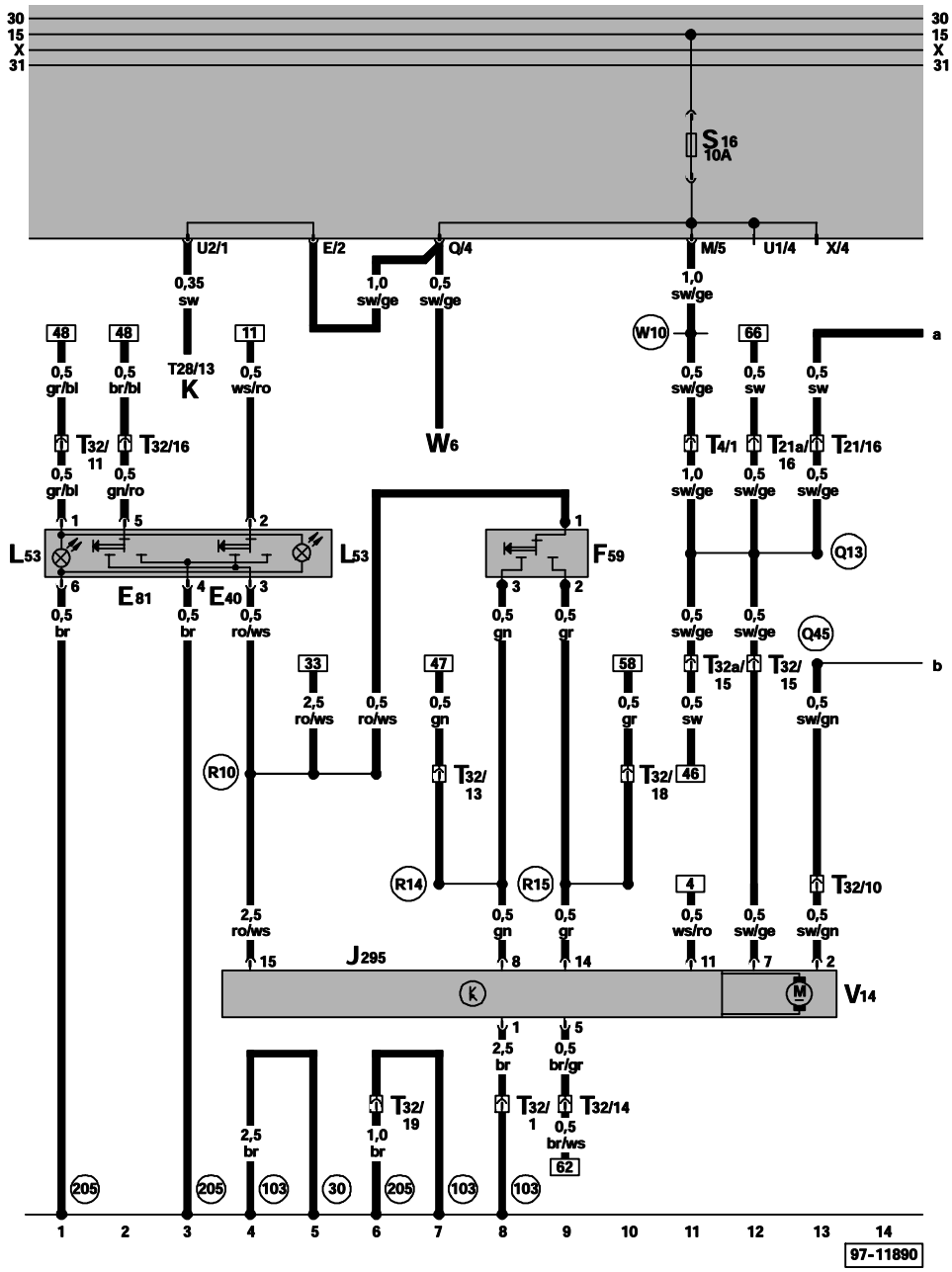

ws = white
sw = black
ro = red
br = brown
gn = green
bl = blue
gr = grey
li = violet
ge = yellow

E40 – Left Front Window Switch, in driver's door
E81 – Right Front Window Switch, in driver's door
F59 – Driver's Door Central Locking System Switch
J295 – Left Front Power Window Control Module, in driver's door
K – Instrument Cluster
L53 – Power Window Switch Light
T4 – 4-Pin Connector, behind fuse/relay panel
T21 – 21-Pin Connector, on left B-pillar
T21a – 21-Pin Connector, on right B-pillar
T28 – 28-Pin Connector, on instrument cluster
T32 – 32-Pin Connector, on left A-pillar, lower part
T32a – 32-Pin Connector, on right A-pillar, lower part
V14 – Left Window Motor
W6 – Glove Compartment Light

R15 – Plus connection –2– (closed), in driver's door wiring harness

W10 – Plus connection (15), in rear wiring harness

30 – Ground connection, –1–, beside fuse/relay panel

103 – Ground connection –2–, in power window wiring harness

205 – Ground connection, in driver's door wiring harness

Q13 – Plus connection (75 as/15), in power window wiring harness

Q45 – Wire connection (comfort), in power window wiring harness

R10 – Plus connection –1– (30), in driver's door wiring harness

R14 – Wire connection –1– (open), in driver's door wiring harness

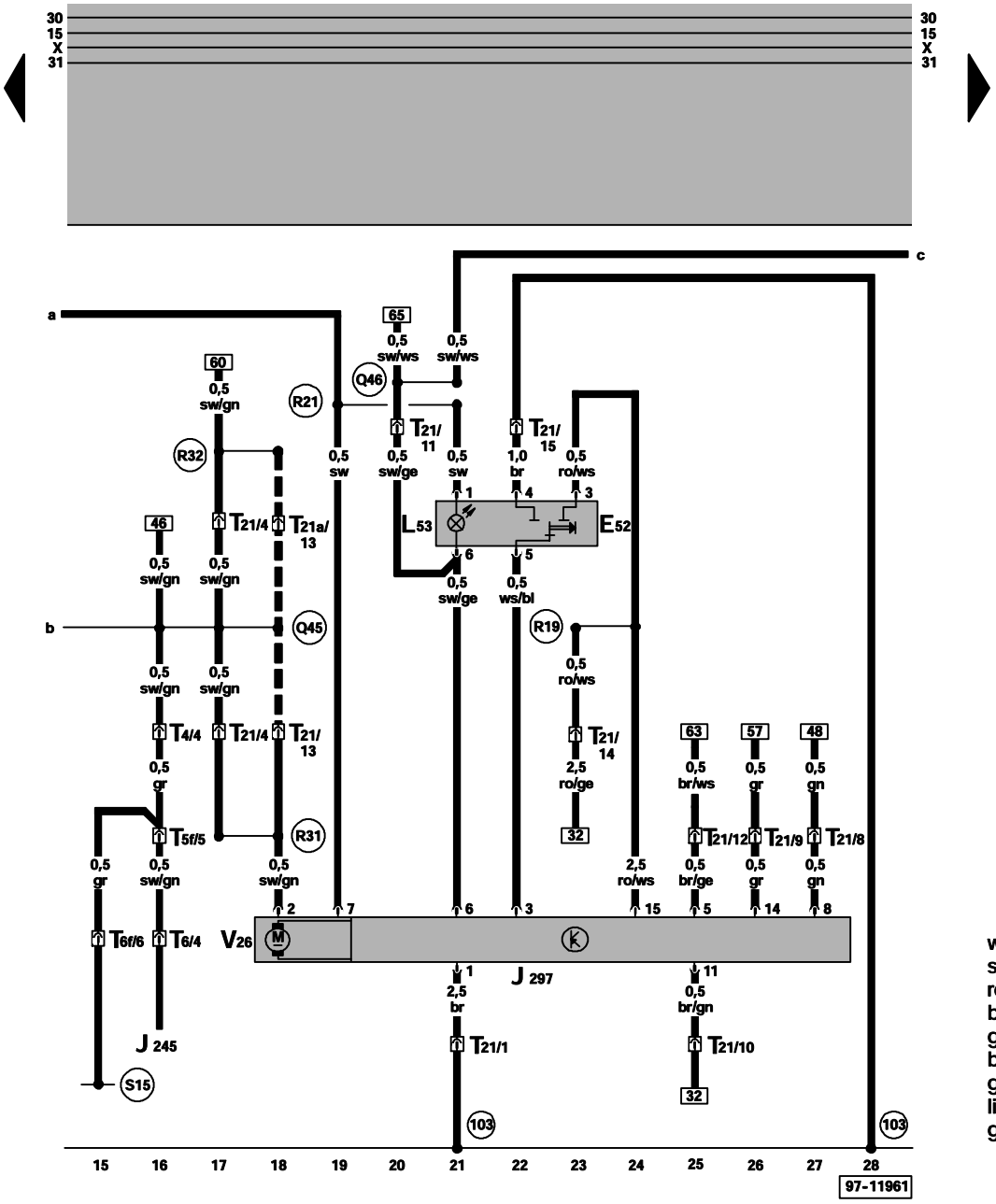

ws = white
sw = black
ro = red
br = brown
gn = green
bl = blue
gr = grey
li = violet
ge = yellow

E52 - Left Rear Window Switch, (In LR Door)
J245 - Power Sunroof Control Module
J297 - Left Rear Power Window Control Module, in left rear door
L53 - Power Window Switch Light
T4 - 4-Pin Connector, below rear seat bench
T5f - 5-Pin Connector, behind fuse/relay panel
T6 - 6-Pin Connector, near sunroof switch
T6f - 6-Pin Connector, below rear seat bench
T21 - 21-Pin Connector, on left B-pillar
T21a - 21-Pin Connector, on right B-pillar
V26 - Left Rear Door Window Motor

(86) - Ground connection -1-, in rear wiring harness

(103) - Ground connection -2-, in power window wiring harness

(Q45) - Wire connection (comfort), in power window wiring harness

(Q46) - Wire connection (child lock), in power window wiring harness

(R19) - Plus connection -1- (30), in left rear door wiring harness

(R21) - Plus connection -3- (15), in left rear door wiring harness

(R31) - Wire connection -1-, in left rear door wiring harness

(S15) - Wire connection (closed), in central locking system wiring harness

▬▬ - Vehicles without central locking system only

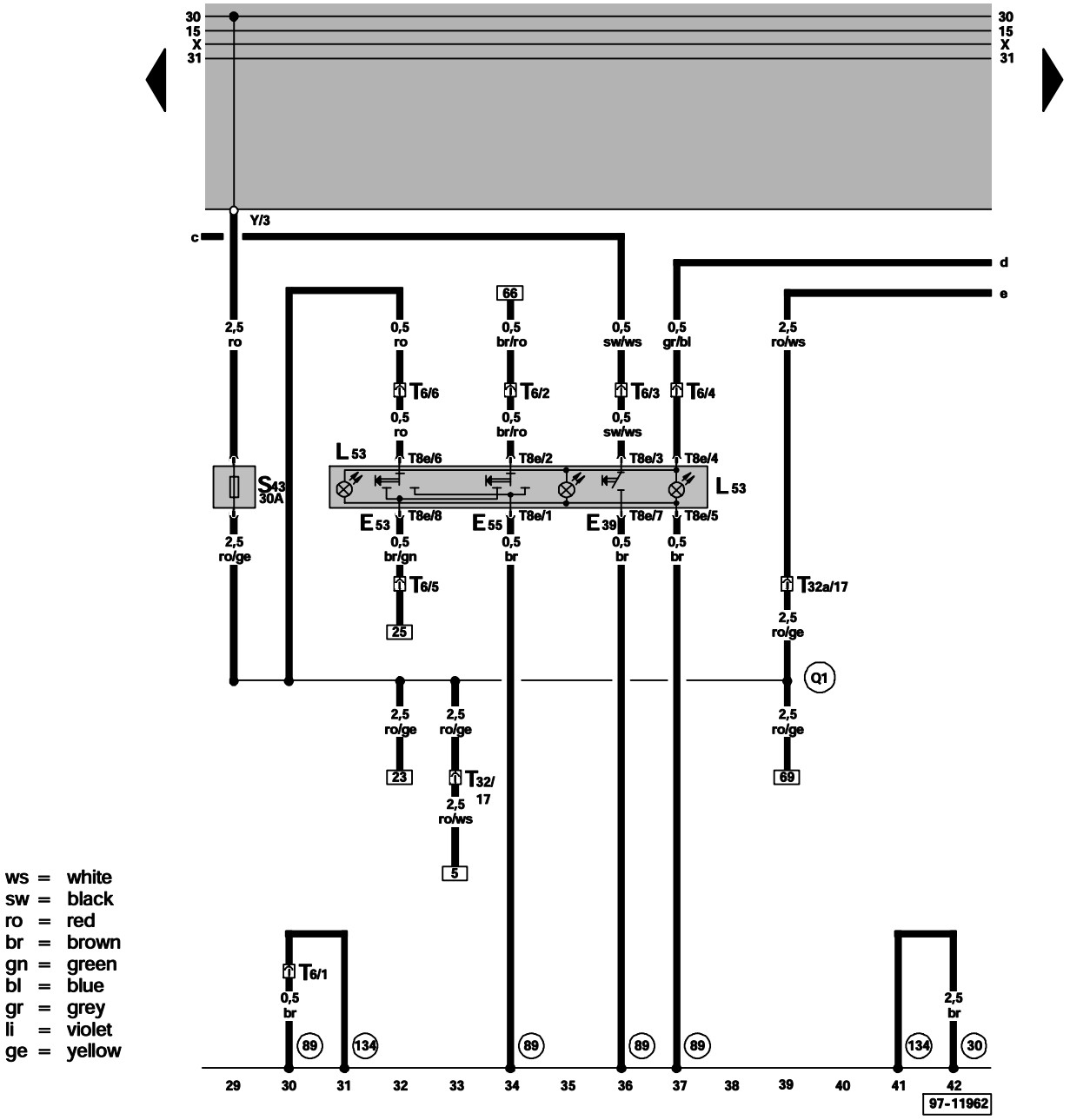

E39 - Window Lockout Switch, in instrument panel, center
E53 - Left Rear Window Switch, in instrument panel, center
E55 - Right Rear Window Switch, in instrument panel, center
L53 - Power Window Switch Light
S43 - Power Window Circuit Breaker, above fuse/ relay panel
T6 - 6-Pin Connector, behind instrument panel, right
T8e - 8-Pin Connector
T32 - 32-Pin Connector, on left A-pillar, lower part
T32a - 32-Pin Connector, on right A-pillar, lower part

(30) - Ground connection, -1-, beside fuse/relay panel

(89) - Ground connection -1-, in power window wiring harness

(134) - Ground connection -3-, in power window wiring harness

(Q1) - Plus connection (30), in power window wiring harness

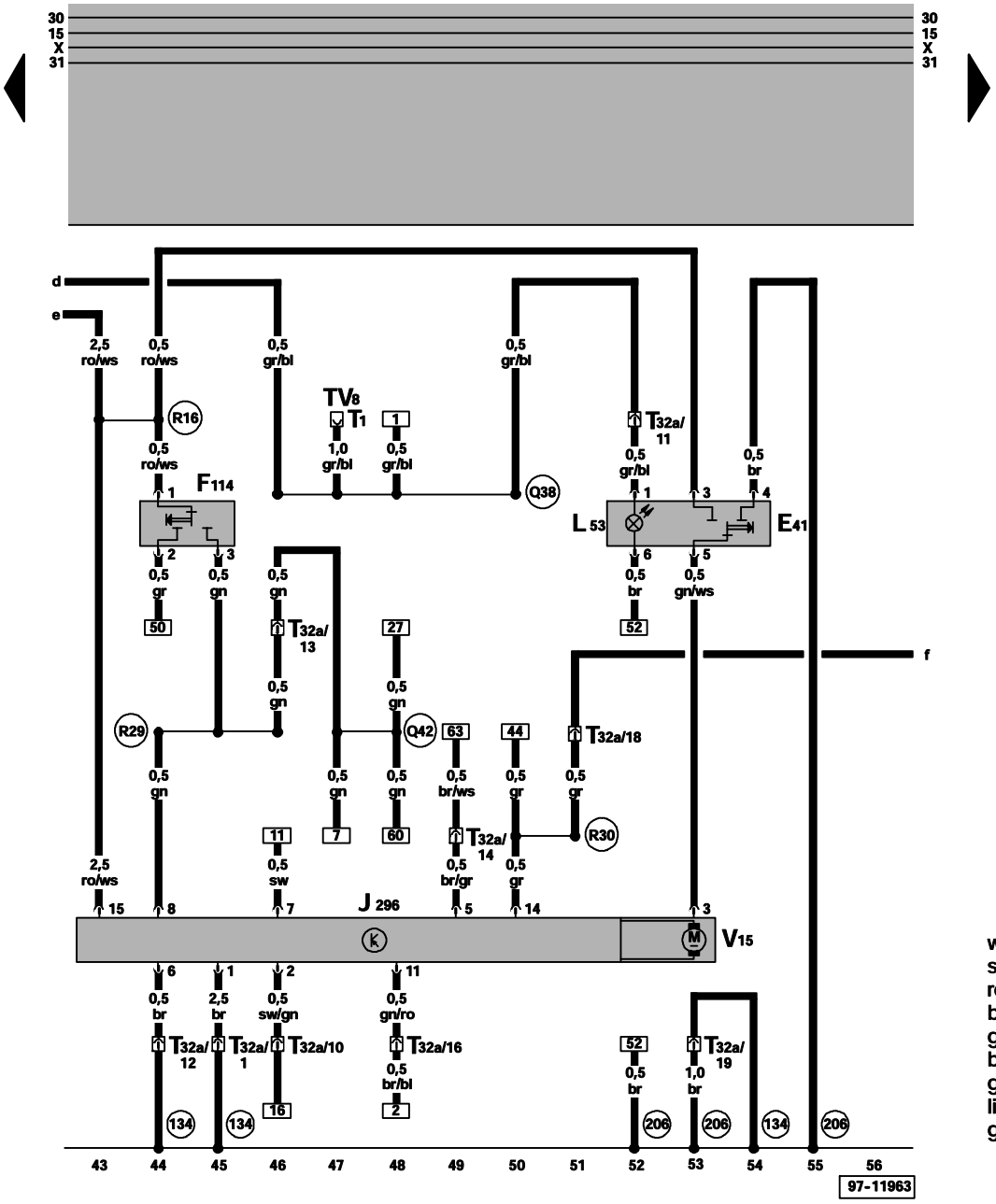

ws = white
sw = black
ro = red
br = brown
gn = green
bl = blue
gr = grey
li = violet
ge = yellow

E41 - Right Front Window Switch, in front passenger's door
F114 - Passenger's Door Central Locking System Switch
J296 - Right Front Power Window Control Module, in front passenger's door
L53 - Power Window Switch Light
T1 - Single Connector
T32a - 32-Pin Connector, on right A-pillar, lower part
V15 - Right Window Motor

134 - Ground connection -3-, in power window wiring harness

206 - Ground connection, in passenger's door wiring harness

Q38 - Plus connection (58b) -1-, in power window wiring harness

Q42 - Wire connection (lock open), in power window wiring harness

R16 - Plus connection -1- (30), in passenger's door wiring harness

R29 - Wire connection -1- (open), in passenger's door wiring harness

R30 - Wire connection -1- (closed), in passenger's door wiring harness

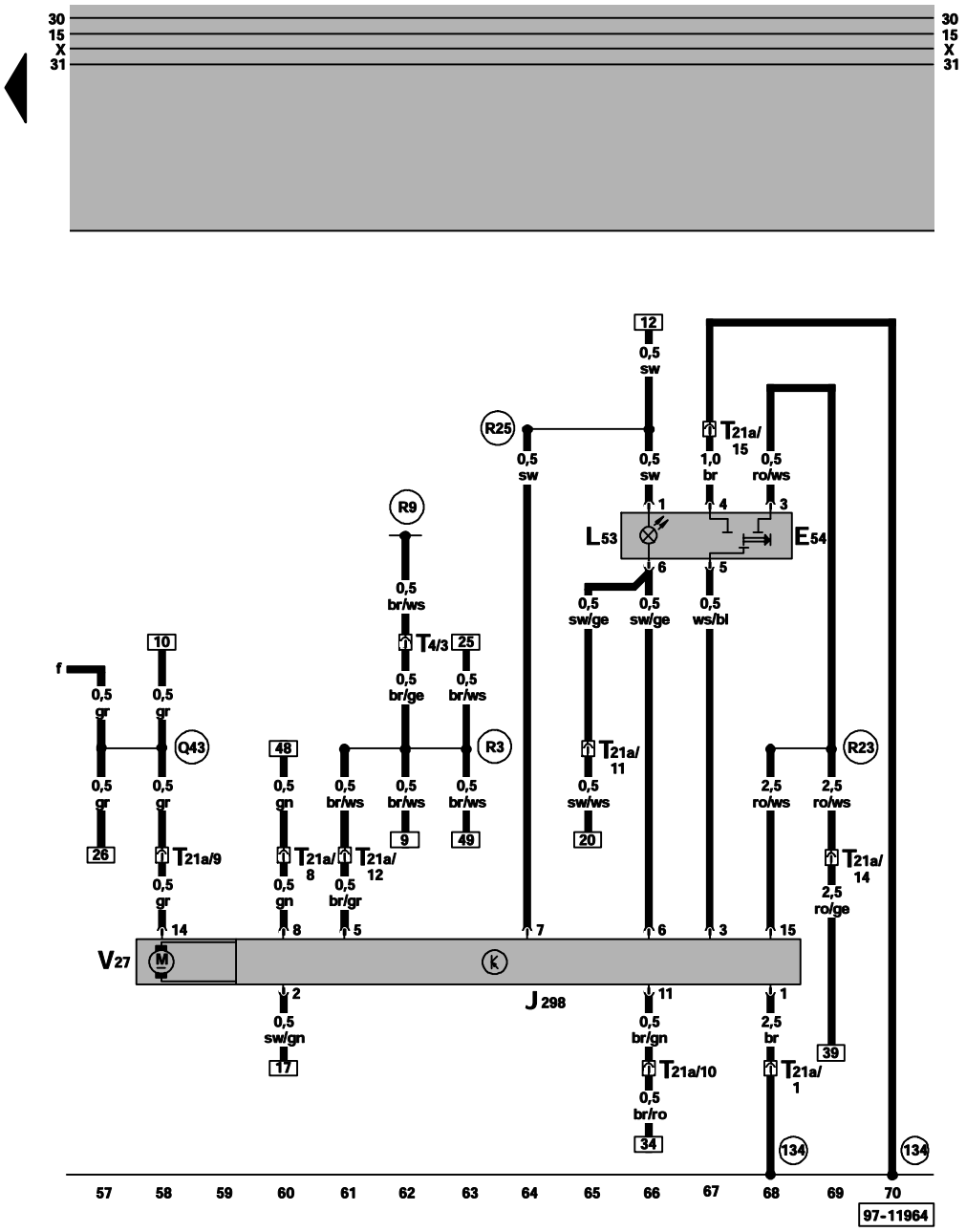

ws = white
sw = black
ro = red
br = brown
gn = green
bl = blue
gr = grey
li = violet
ge = yellow

E54 - Right Rear Window Switch, in right rear door
J298 - Right Rear Power Window Control Module, in right rear door
L53 - Power Window Switch Light
T4 - 4-Pin Connector
T21a - 21-Pin Connector, on right B-pillar
V27 - Right Rear Door Window Motor

Q43 - Wire connection (lock closed), in power window wiring harness

R3 - Wire connection (door contact switch, right and left), in power window wiring harness

R9 - Wire connection (door contact switch), in rear door wiring harness

R23 - Plus connection -1- (30), in right rear door wiring harness

R25 - Plus connection -3- (15), in right rear door wiring harness

eated seats,

from August 1994

Relay location
For relay location and multiple connectors see also section "component locations".

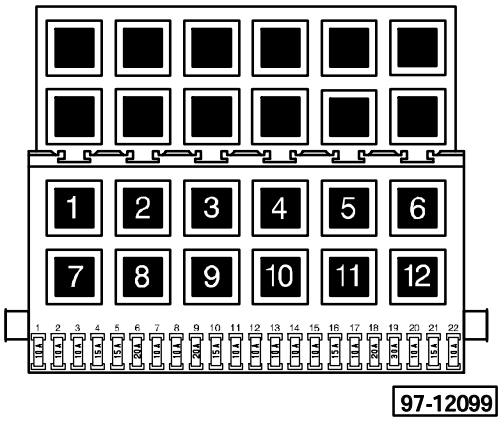

Fuse colors

30A – green
25A – white
20A – yellow
15A – blue
10A – red

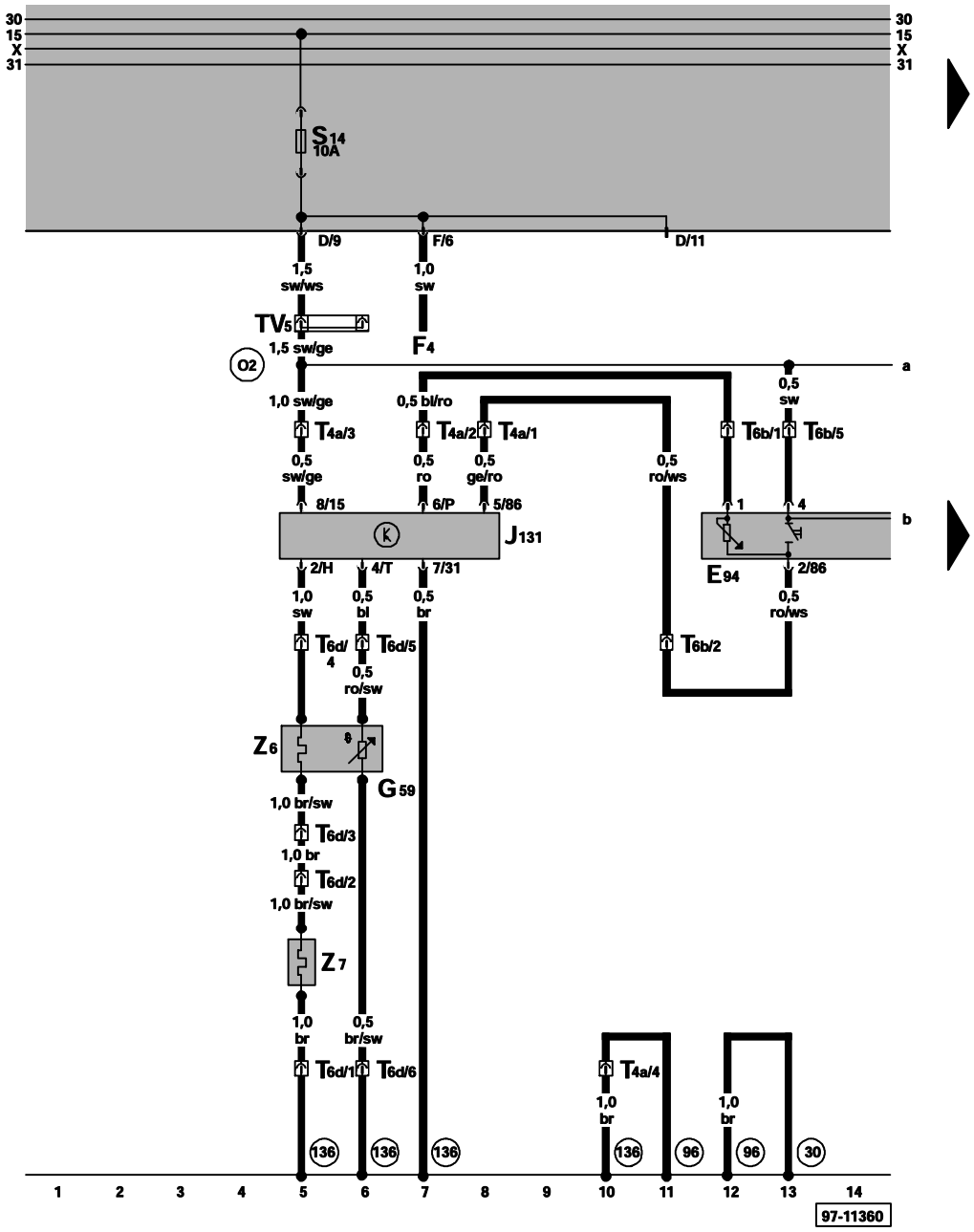

ws = white
sw = black
ro = red
br = brown
gn = green
bl = blue
gr = grey
li = violet
ge = yellow

E94 – Driver's Seat Heat Regulating Switch
F4 – Back-Up Light Switch
G59 – Driver's Seat Heater Temperature Sensor
J131 – Driver's Seat Heater Control Module
T4a – 4-Pin Connector, below diver's seat
T6b – 6-Pin Connector, behind fuse/relay panel
T6d – 6-Pin Connector, below driver's seat
TV5 – Terminal 15a Wire Connector
Z6 – Driver's Seat Heat Element
Z7 – Driver's Backrest Heat Element

(30) – Ground connection, –1–, beside fuse/relay panel

(96) – Ground connection –1–, in heated seats wiring harness

(136) – Ground connection –2–, in heated seats wiring harness

(O2) – Plus connection (15), in heated seats wiring harness

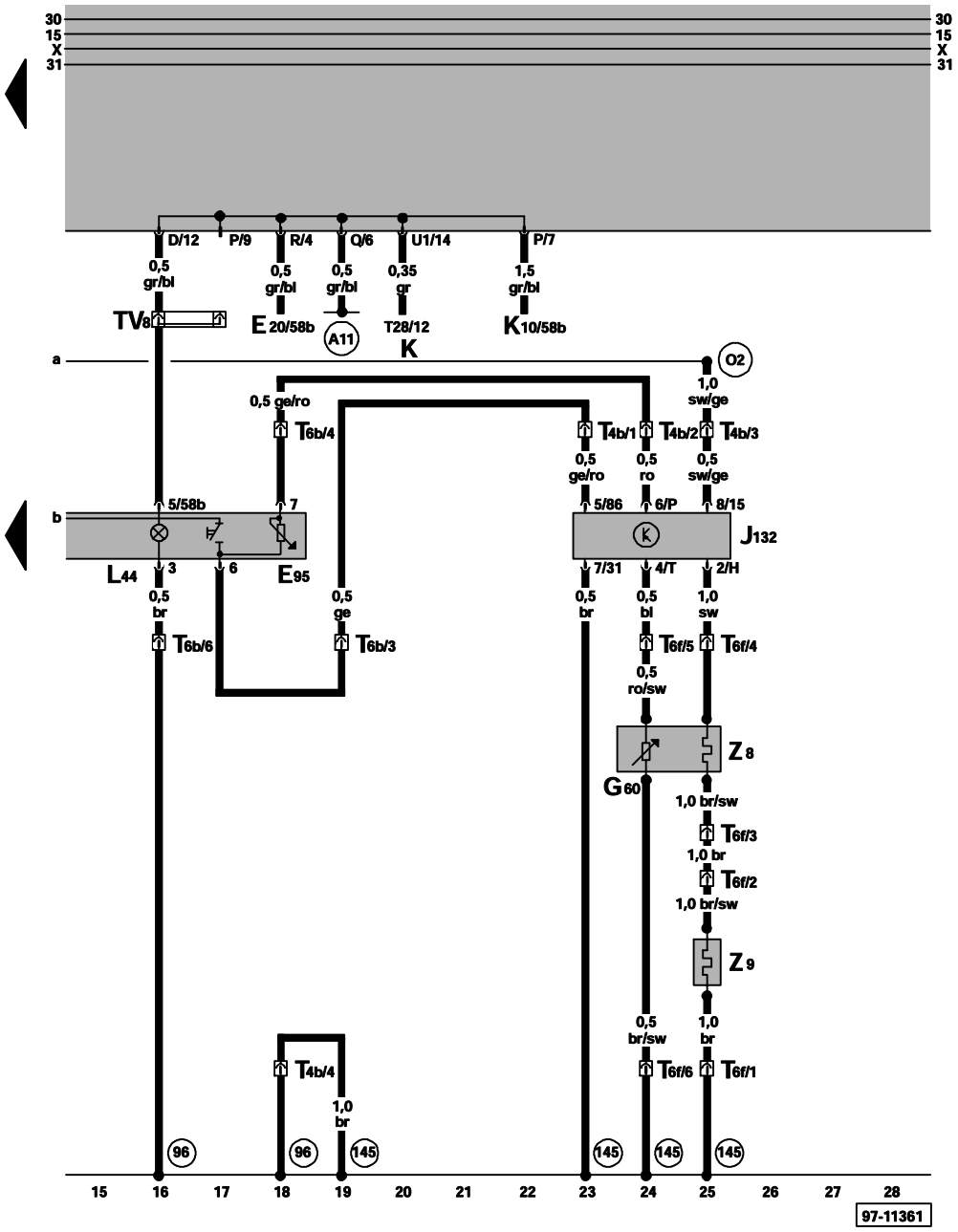

ws = white
sw = black
ro = red
br = brown
gn = green
bl = blue
gr = grey
li = violet
ge = yellow

E20 – Instrument Panel Light Dimmer Switch
E95 – Passenger's Seat Heat Regulating Switch
G60 – Passenger Seat Heater Temperature Sensor
J132 – Passenger's Seat Heater Control Module
K – Instrument Cluster
K10 – Rear Window Defogger Indicator Light
L44 – Seat Heater Switch Illumination Light
T4 – 4-Pin Connector, below passenger's seat
T6b – 6-Pin Connector, behind fuse/relay pan-
elT6f – 6-Pin Connector, below passenger's seat
T28 – 28-Pin Connector, on instrument cluster
Tv8 – Terminal 58b Wire Connector
Z8 – Passenger's Seat Heat Element
Z9 – Passenger's Backrest Heat Element

96 – Ground connection –1–, in heated seats wiring harness

145 – Ground connection –3–, in heated seats wiring harness

A11 – Plus connection (58b) in instrument panel wiring harness

O2 – Plus connection (15), in heated seats wiring harness

nterior lig t wit delay switc , rear reading lig ts, ma e up mirror lig ts

from August 1994

Relay location
For relay location and multiple connectors see also section "component locations".

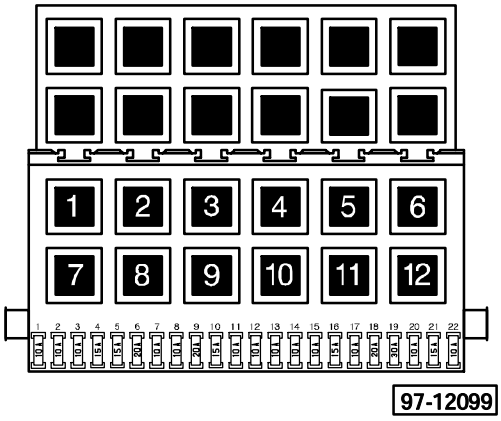

Fuse colors

30A – green
25A – white
20A – yellow
15A – blue
10A – red

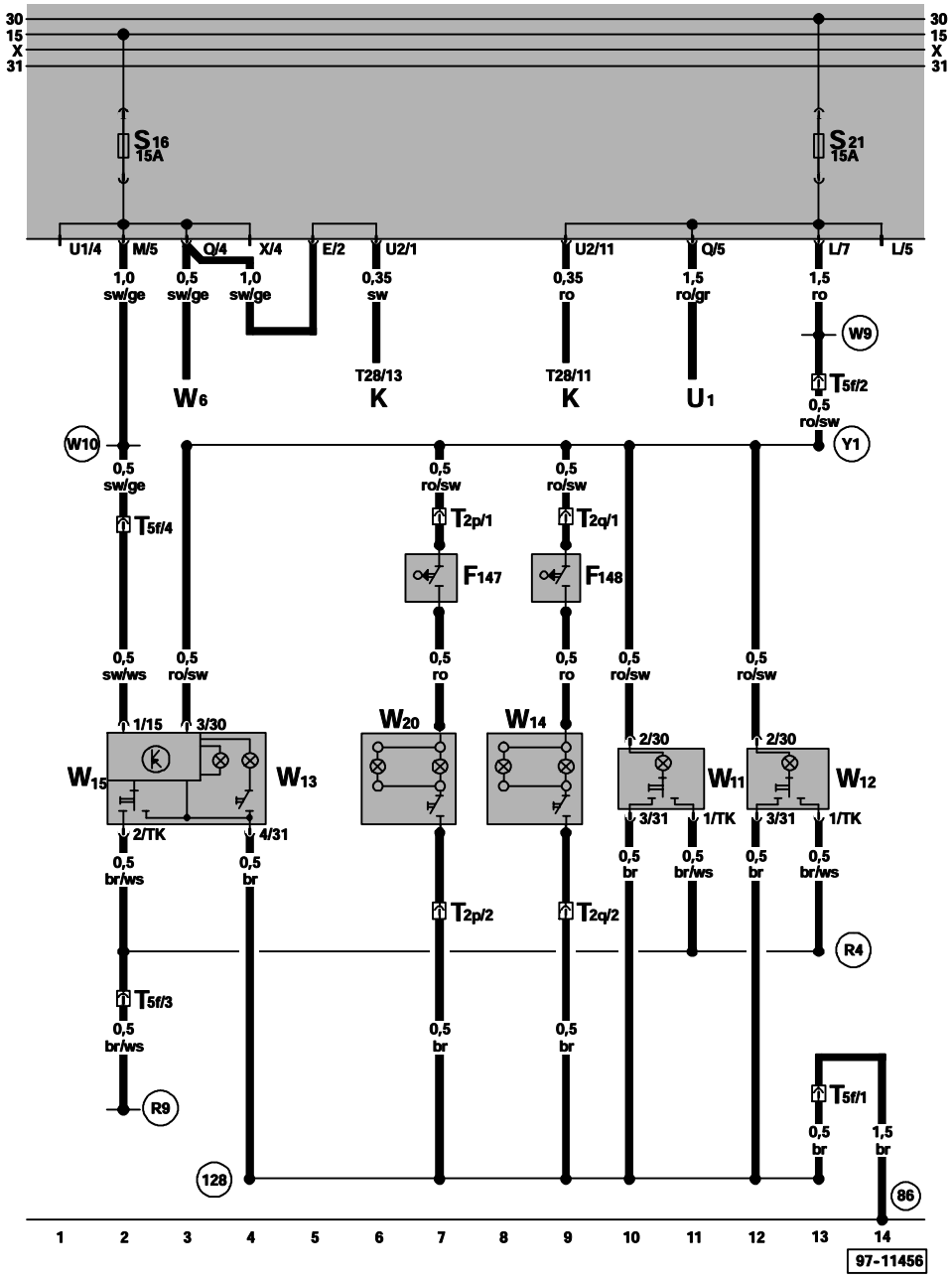

ws = white
sw = black
ro = red
br = brown
gn = green
bl = blue
gr = grey
li = violet
ge = yellow

F147 – Left Make-Up Mirror Light Switch
F148 – Right Make-Up Mirror Light Switch
K – Instrument Cluster
T2p – Double Connector, on left A-pillar, upper part
T2q – Double Connector, on right A-pillar, upper part
T5f – 5-Pin Connector, left A-pillar, near fuse/relay panel
T28 – 28-Pin Connector, on instrument cluster
U1 – Cigarette Lighter
W6 – Glove Compartment Light
W11 – Left Rear Reading Light
W12 – Right Rear Reading Light
W13 – Right Front Map/Reading Light
W14 – Right Make-Up Mirror Light
W15 – Interior Light With Delay Switch
W20 – Left Make-Up Mirror Light

86 – Ground connection –1–, in rear wiring harness
128 – Ground connection –1–, in interior light wiring harness
R4 – Wire connection –1–, in interior light wiring harness
R9 – Wire connection (door contact switch), in rear door wiring harness
W9 – Plus connection (30), in rear wiring harness
W10 – Plus connection (15), in rear wiring harness
Y1 – Plus connection (30), in interior light wiringharness

eated power mirrors,

from August 1994

Relay location
For relay location and multiple connectors see also section "component locations".

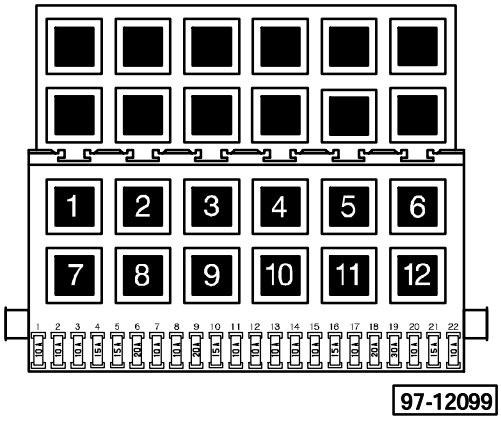

Fuse colors

30A – green
25A – white
20A – yellow
15A – blue
10A – red

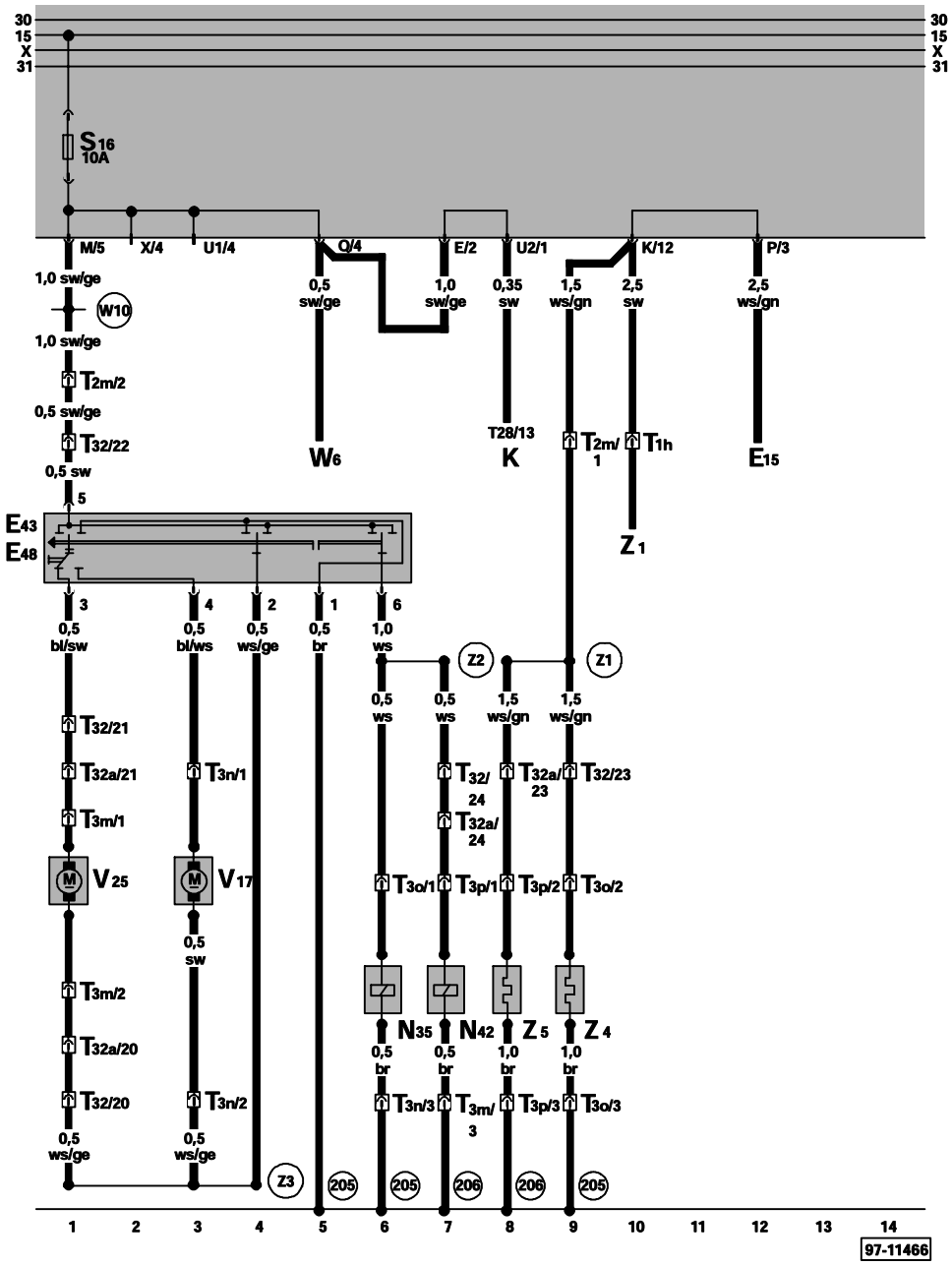

ws = white
sw = black
ro = red
br = brown
gn = green
bl = blue
gr = grey
li = violet
ge = yellow

E15 – Rear Window Defogger Switch
E43 – Mirror Adjustment Switch
E48 – Mirror Selector Switch
K – Instrument Cluster
N35 – Driver's Side Mirror Magnetic Clutch
N42 – Passenger's Side Mirror Magnetic Clutch
T1h – Single Connector, in luggage compartment, left
T2m – Double Connector, behind fuse/relay panel
T3m – 3-Pin Connector, in passenger's door
T3n – 3-Pin Connector, in driver's door
T3o – 3–Pin Connector, in driver's door
T3p – 3-Pin Connector, in passenger's door
T28 – 28-Pin Connector, in instrument cluster
T32 – 32-Pin Connector, on left A-pillar
T32a – 32-Pin Connector, on right A-pillar
V17 – Driver's Side Mirror Adjustment Motor
V25 – Passenger's Side Mirror Adjustment Motor
W6 – Glove Compartment Light
Z1 – Rear Window Defogger/Heat Element
Z4 – Driver's Side Heated Mirror
Z5 – Passenger's Side Heated Mirror

205 – Ground connection, in driver's door wiring harness
206 – Ground connection, in passenger's door wiring harness
W10 – Plus connection (15), in rear wiring harness
Z1 – Wire connection –1–, in power heated mirror wiring harness
Z2 – Wire connection –2–, in power heated mirror wiring harness
Z3 – Wire connection –3–, in power heated mirror wiring harness

eated was er no les,

from August 1994

Relay location
For relay location and multiple connectors see also section "component locations".

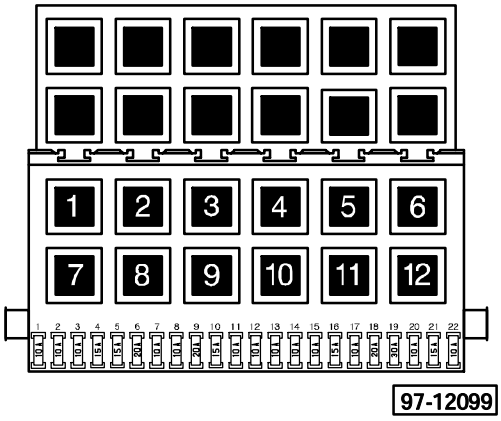

Fuse colors

30A – green
25A – white
20A – yellow
15A – blue
10A – red

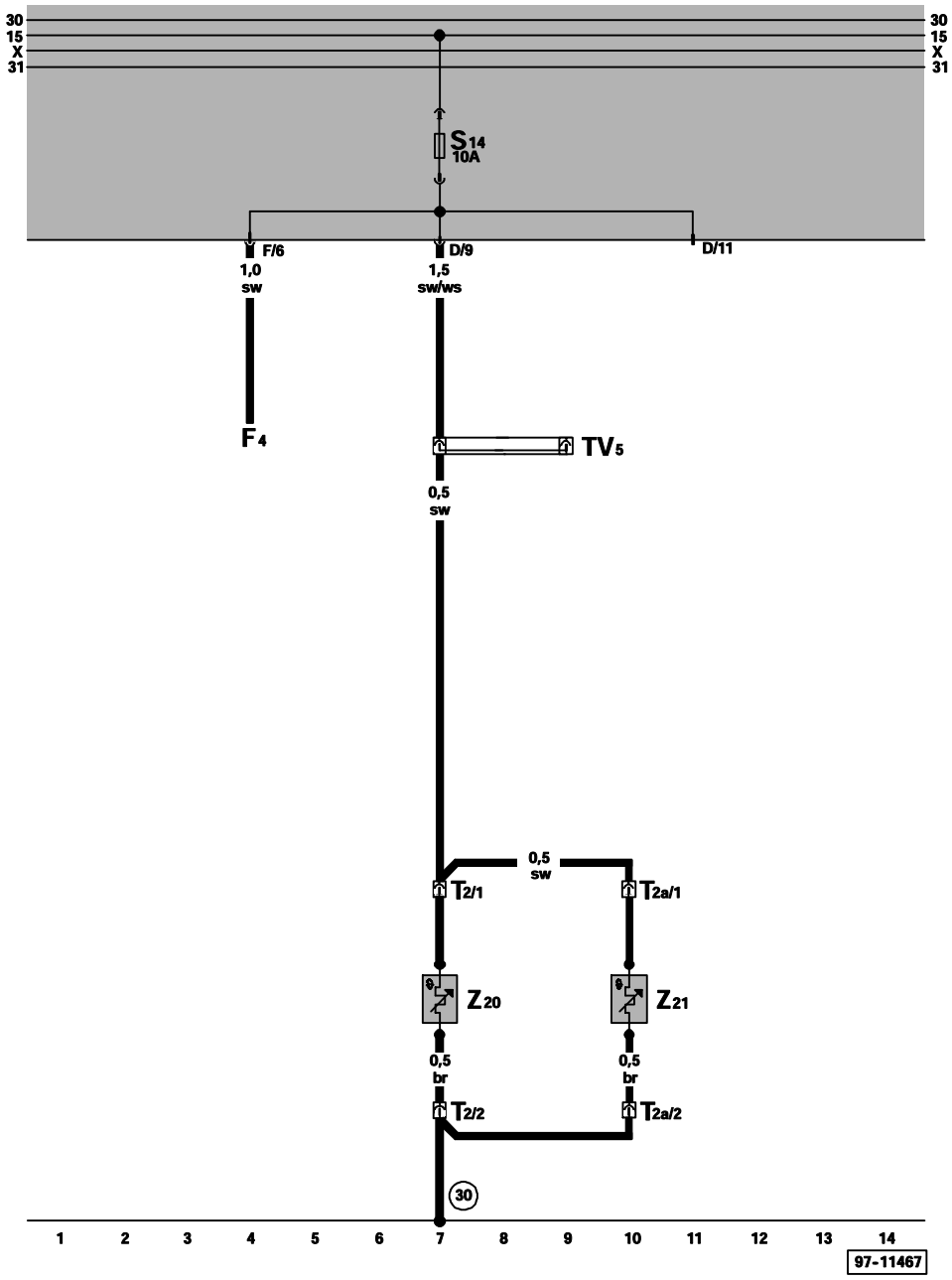

ws = white
sw = black
ro = red
br = brown
gn = green
bl = blue
gr = grey
li = violet
ge = yellow

F4 – Back-Up Light Switch
T2 – Double Connector, on engine hood
T2a – Double Connector, on engine hood
TV5 – Terminal 15a Wire Connector, above fuse/relay panel
Z20 – Left Washer Nozzle Heater
Z21 – Right Washer Nozzle Heater

(30) – Ground connection, –1–, beside fuse/relay panel

run lid release, sedan only,

from August 1994

Relay location
For relay location and multiple connectors see also section "component locations".

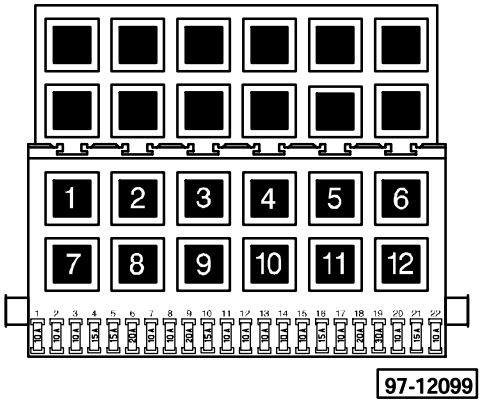

Fuse colors

30A – green
25A – white
20A – yellow
15A – blue
10A – red

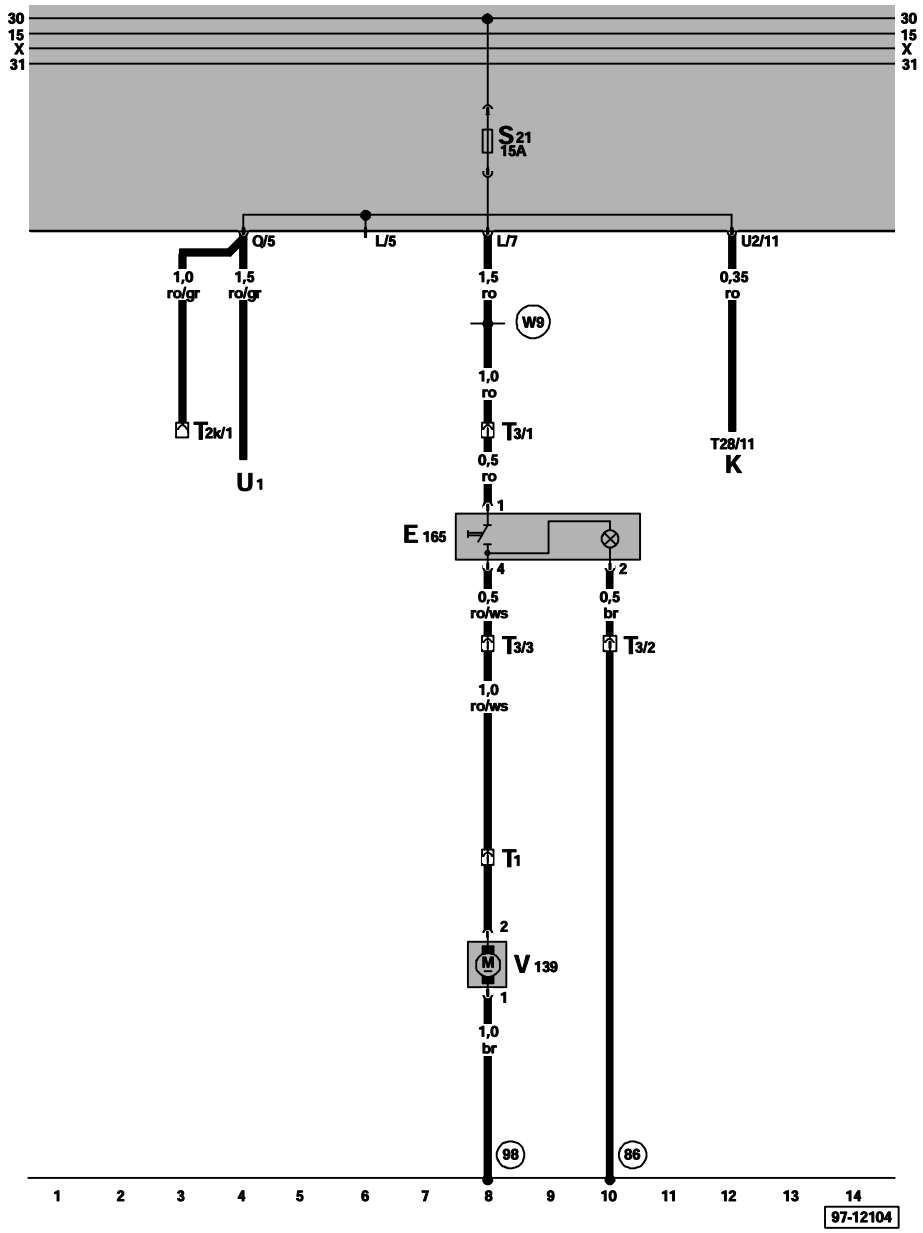

ws = white
sw = black
ro = red
br = brown
gn = green
bl = blue
gr = grey
li = violet
ge = yellow

E165 – Trunk Lid Release Switch
K – Instrument Cluster
T1 – Single Connector, in luggage compartment, left
T2k – Double Connector, behind fuse/relay panel
T3 – 3-Pin Connector, near parking brake lever, below console
T28 – 28-Pin Connector, on instrument cluster
U1 – Cigarette Lighter
V139 – Trunk Lid Release Motor

(86) – Ground connection –1–, in rear wiring harness

(98) – Ground connection, in rear lid wiring harness

(W9) – Plus connection (30), in rear wiring harness

Cruise control,

from August 1994

Relay location
For relay location and multiple connectors see also section "component locations".

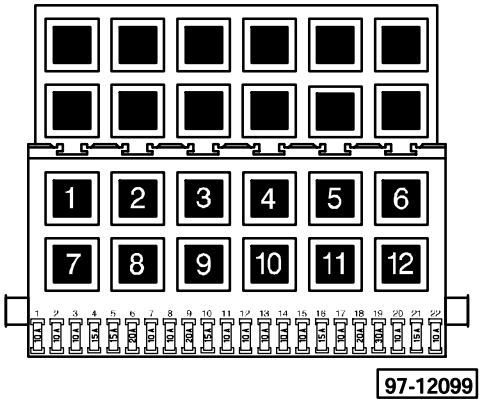

Fuse colors

30A – green
25A – white
20A – yellow
15A – blue
10A – red

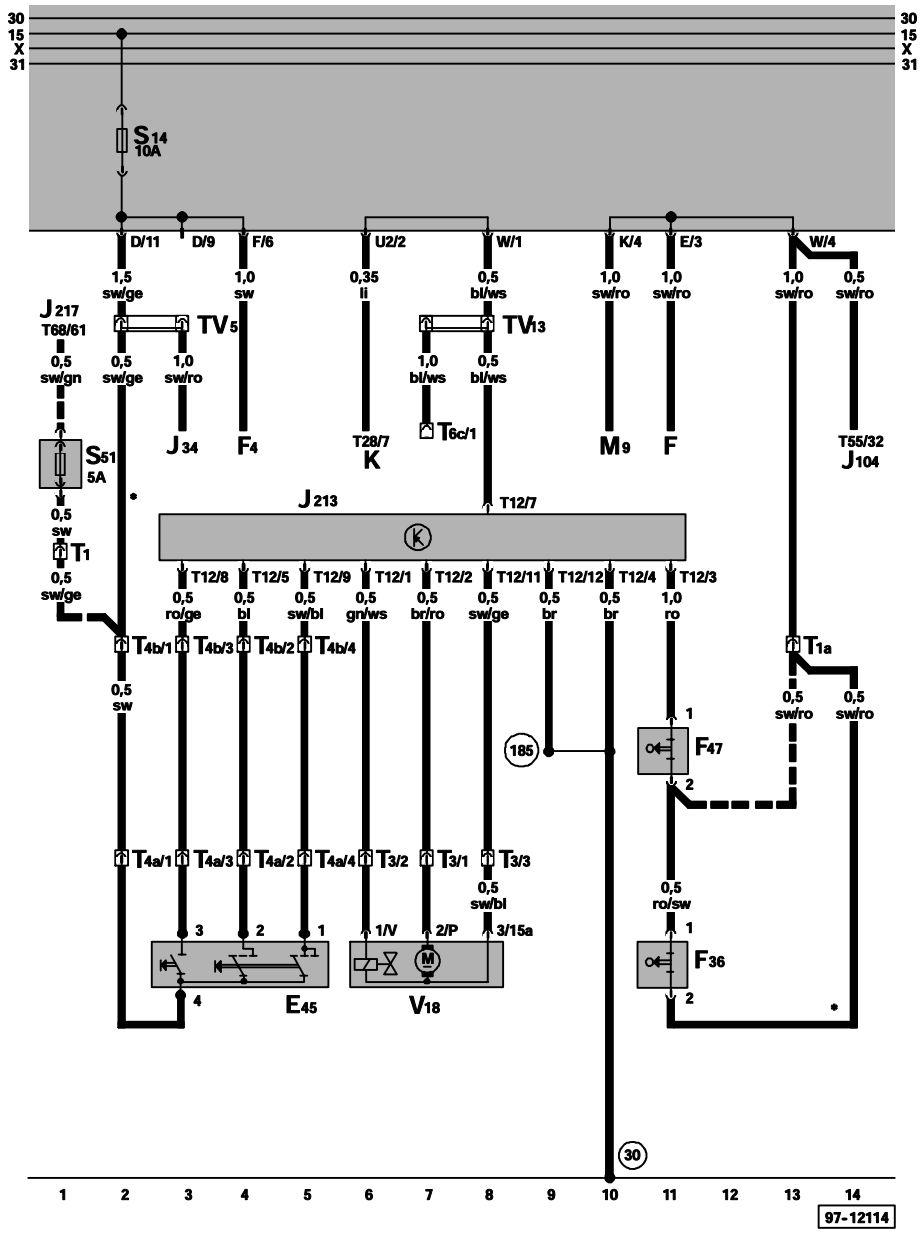

ws = white
sw = black
ro = red
br = brown
gn = green
bl = blue
gr = grey
li = violet
ge = yellow

E45 – Cruise Control Switch
F – Brake Light Switch
F4 – Back-Up Light Switch
F36 – Clutch Vacuum Vent Valve Switch*
F47 – Brake Vacuum Vent Valve Switch
J34 – Seat Belt Warning System Relay
J104 – ABS Control Module (w/EDL)
J213 – Cruise Control, Control Module, behind console
J217 – Transmission Control Module (TCM)
K – Instrument Cluster
M9 – Left Brake Light
S51 – Fuse for cruise control, above fuse/relay panel
T1 – Single Connector, behind fuse/relay panel
T1a – Single Connector, behind fuse/relay panel
T3 – 3-Pin Connector, behind fuse/relay panel
T4a – 4-Pin Connector, behind steering column switch cover
T4b – 4-Pin Connector, near steering column
T6c – 6-Pin Connector, behind fuse/relay panel
T12 – 12-Pin Connector
T28 – 28-Pin Connector, on instrument cluster
T55 – 55-Pin Connector, on ABS Control Module (w/EDL)
T68 – 68-Pin Connector, on Transmission Control Module (TCM)
TV5 – Terminal 15a Wire Connector, above fuse/relay panel
TV13 – Vehicle Speed Signal Wire Connector, above fuse/relay panel
V18 – Cruise Control Vacuum Pump
(30) – Ground connection, –1–, beside fuse/relay panel
(185) – Ground connection, in cruise control wiring harness
* – Manual transmission only
▬▬ – Automatic transmission only

Central loc ing system and anti t eft alarm system,

from August 1994

Relay location
For relay location and multiple connectors see also section "component locations".

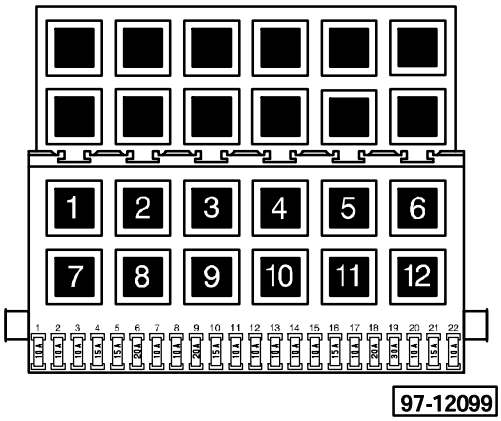

Fuse colors

30A – green
25A – white
20A – yellow
15A – blue
10A – red

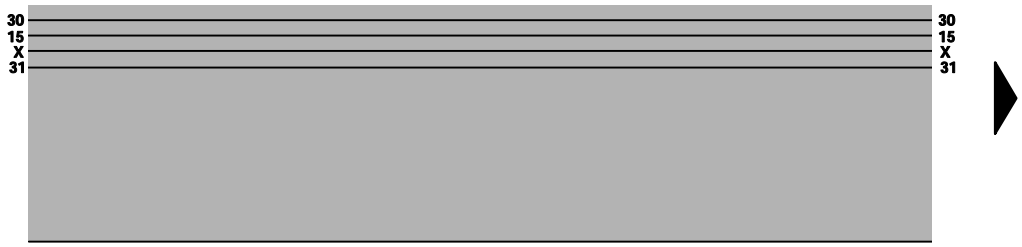

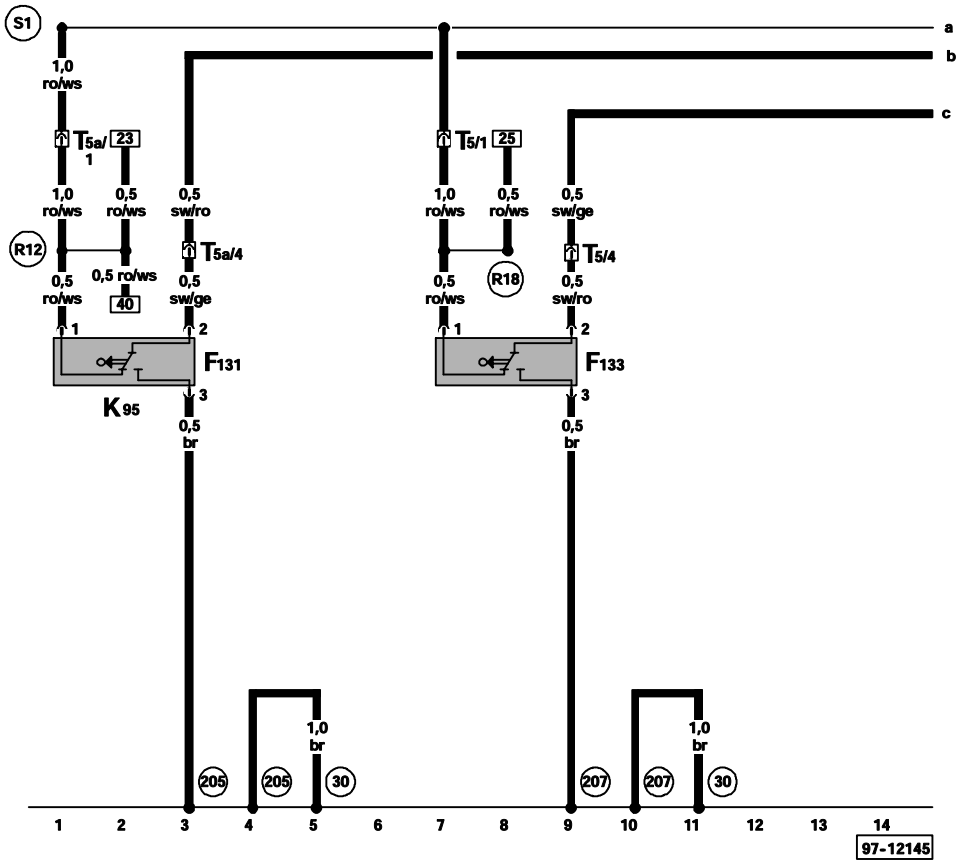

ws = white
sw = black
ro = red
br = brown
gn = green
bl = blue
gr = grey
li = violet
ge = yellow

F131 – Left Front Central Locking System Activator/Switch
F133 – Right Front Central Locking System Activator/Switch
T5 – 5-Pin Connector, on B-pillar, right
T5a – 5-Pin Connector, on B-pillar, left

(30) – Ground connection, –1–, beside fuse/relay panel

(205) – Ground connection, in driver's door wiring harness

(207) – Ground connection, in left rear door wiring harness

(R12) – Plus connection –3– (30), in driver's door wiring harness

(R18) – Plus connection –3– (30), in passenger's door wiring harness

(S1) – Plus connection (30) –1–, in central locking system wiring harness

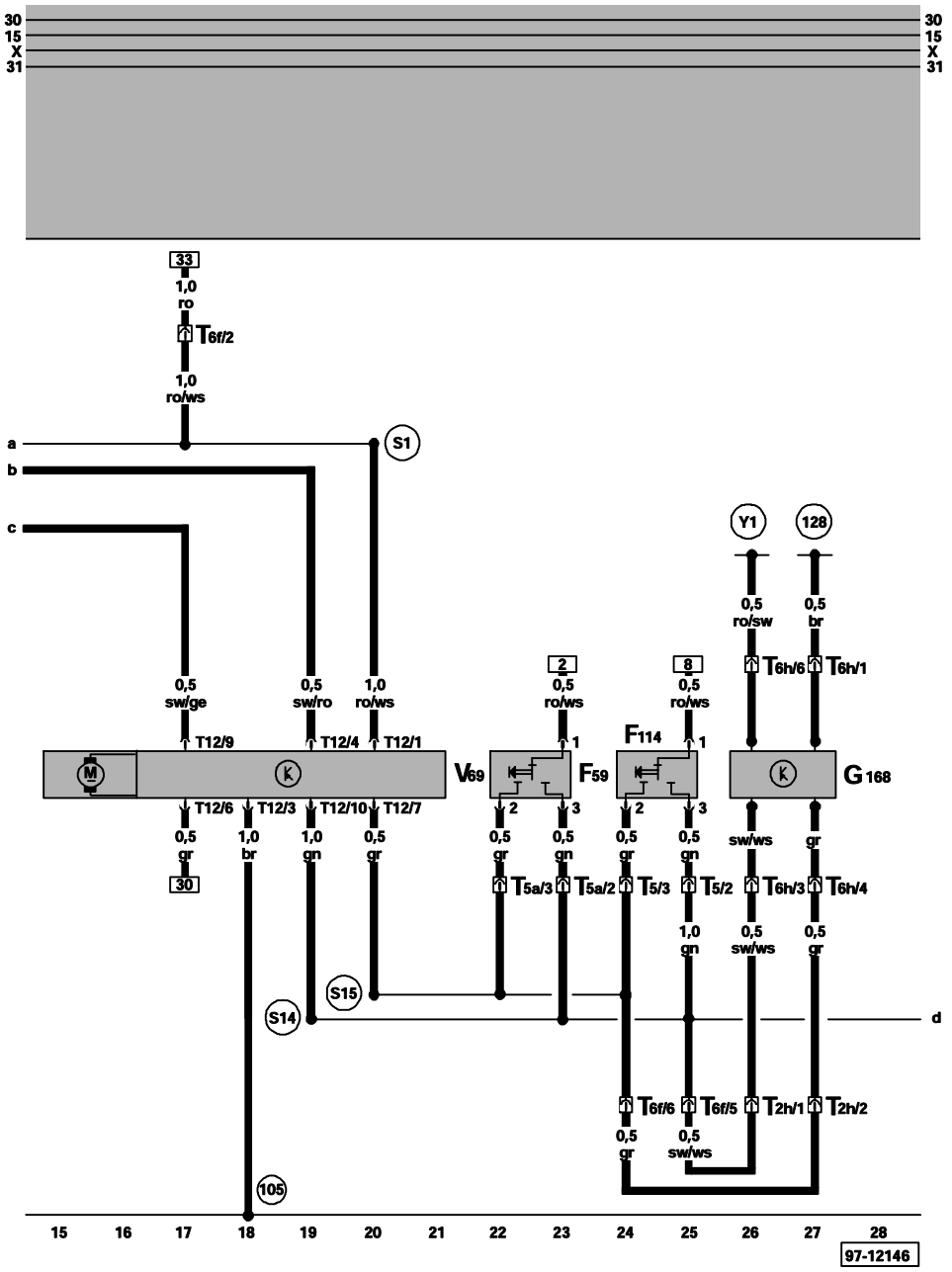

ws = white
sw = black
ro = red
br = brown
gn = green
bl = blue
gr = grey
li = violet
ge = yellow

F59 – Driver's Door Central Locking System Switch
F114 – Passenger's Door Central Locking System Switch
G168 – Infrared Sensor for Central Locking
T2h – Double Connector, behind fuse/relay panel
T5 – 5-pin Connector, on B-pillar, right
T5a – 5-Pin Connector, on B-pillar, left
T6f – 6-Pin Connector, below rear seat bench
T6h – 6-Pin Connector, in inside rear mirror
T12 – 12-pin Connector
V69 – Central Locking System Pump and Control Module

105 – Ground connection –1–, in central locking system wiring harness

128 – Ground connection –1–, in interior light wiring harness

S1 – Plus connection (30) –1–, in central locking system wiring harness

S14 – Wire connection (open), in central locking system wiring harness

S15 – Wire connection (closed), in central locking system wiring harness

Y1 – Plus connection (30), in interior light wiring harness

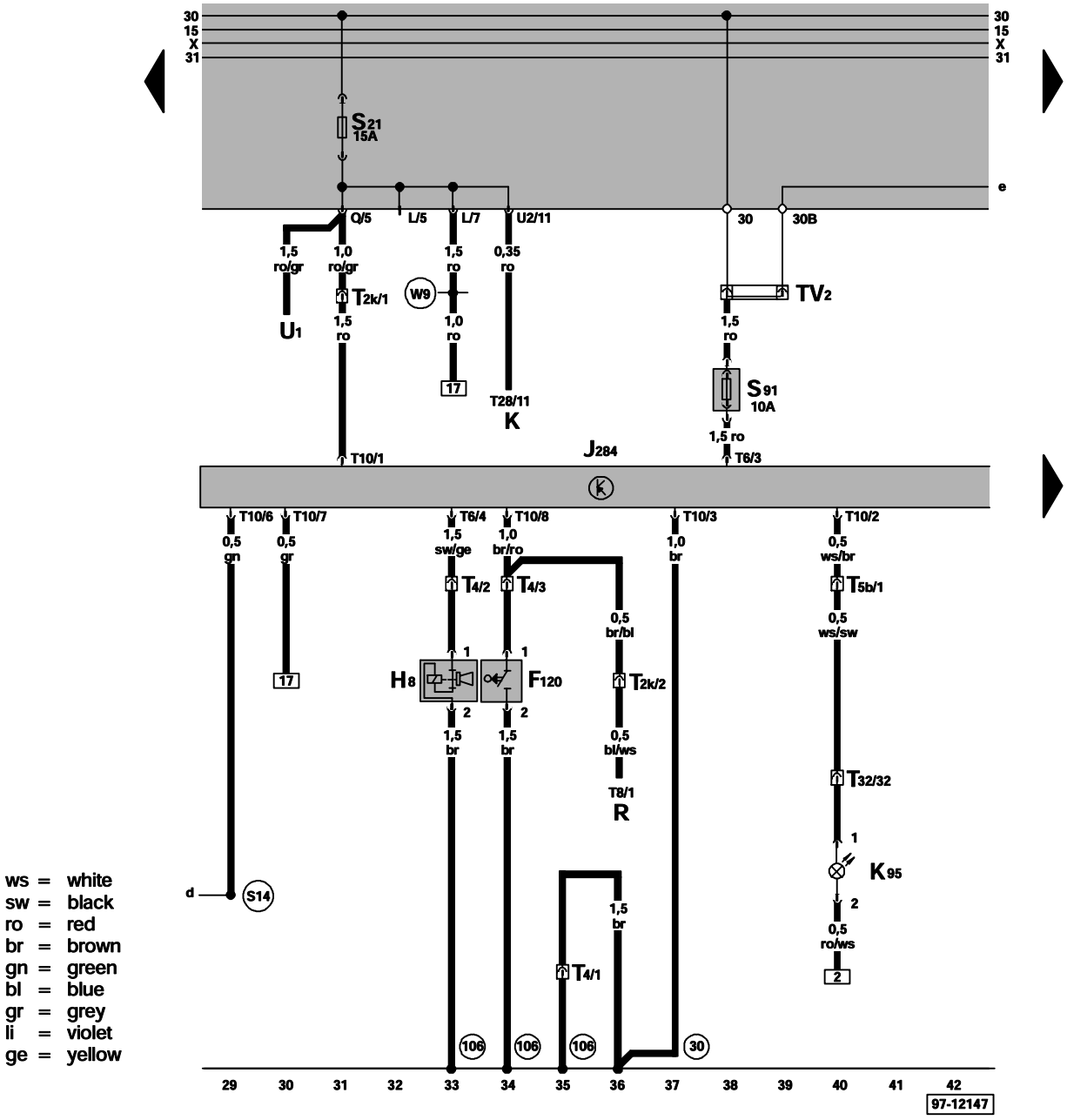

ws = white
sw = black
ro = red
br = brown
gn = green
bl = blue
gr = grey
li = violet
ge = yellow

F120 – Hood Alarm Switch
H8 – Alarm Horn
J284 – Alarm System Control Module, behind instrument panel , left, above fuse/relay panel
K – Instrument Cluster
K95 – Alarm System Indicator Light
R – Radio
S91 – Alarm System Control Module Fuse
T2k – Double Connector, behind fuse/relay panel
T4 – 4-Pin Connector, behind fuse/relay panel
T5b – 5-Pin Connector, on left A-pillar, lower part
T6 – 6-Pin Connector
T8 – 8-Pin Connector, on radio
T10 – 10-Pin Connector
T28 – 28-Pin Connector, on instrument cluster
T32 – 32-Pin Connector, on left A-pillar, lower part
TV2 – Terminal 30 (B+) Wire Connector, behind fuse/relay panel
U1 – Cigarette Lighter
30 – Ground connection, –1–, beside fuse/relay panel
106 – Ground connection, in alarm system wiring harness
S14 – Wire connection (open), in central locking system wiring harness
W9 – Plus connection (30), in rear wiring harness

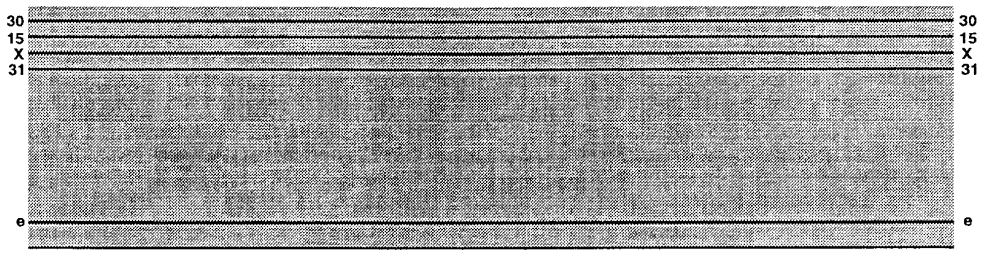

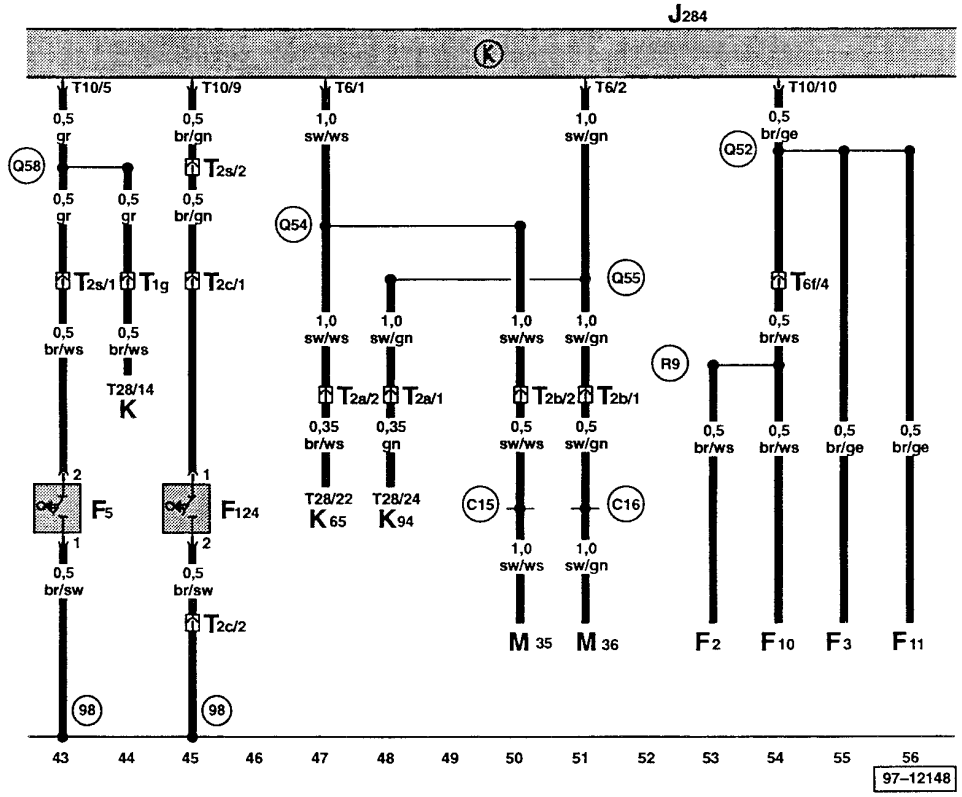

ws = white
sw = black
ro = red
br = brown
gn = green
bl = blue
gr = grey
li = violet
ge = yellow

F2 – Door Contact Switch – Driver's Side
F3 – Door Contact Switch – Passenger's Side
F5 – Luggage Compartment Light Switch
F10 – Left Rear Door Contact Switch
F11 – Right Rear Door Contact Switch
F124 – Trunk Lock Alarm Switch
J284 – Alarm System Control Module
K – Instrument Cluster
K65 – Left Turn Signal Indicator Light
K94 – Right Turn Signal Indicator Light
M35 – Left Front Turn Signal and Side Marker Light
M36 – Right Front Turn Signal and Side Marker Light
T1g – Single Connector, behind fuse/relay panel
T2a – Double Connector, behind fuse/relay panel
T2b – Double Connector, behind fuse/relay panel
T2c – Double Connector, in rear lid
T2s – Double Connector, in luggage compartment, left
T6 – 6-Pin Connector
T10 – 10-Pin Connector
T28 – 28-Pin Connector, on instrument cluster
98 – Ground connection, in rear lid wiring harness
C15 – Wire connection –1–, in headlight wiring harness
C16 – Wire connection –2–, in headlight wiring harness
Q52 – Wire connection (door contact switch), in alarm system wiring harness
Q54 – Wire connection (left turn signal), in alarm system wiring harness
Q55 – Wire connection (right turn signal), in alarm system wiring harness
Q58 – Wire connection (luggage compartment switch), in alarm system wiring harness
R9 – Wire connection (door contact switch), in rear door wiring harness

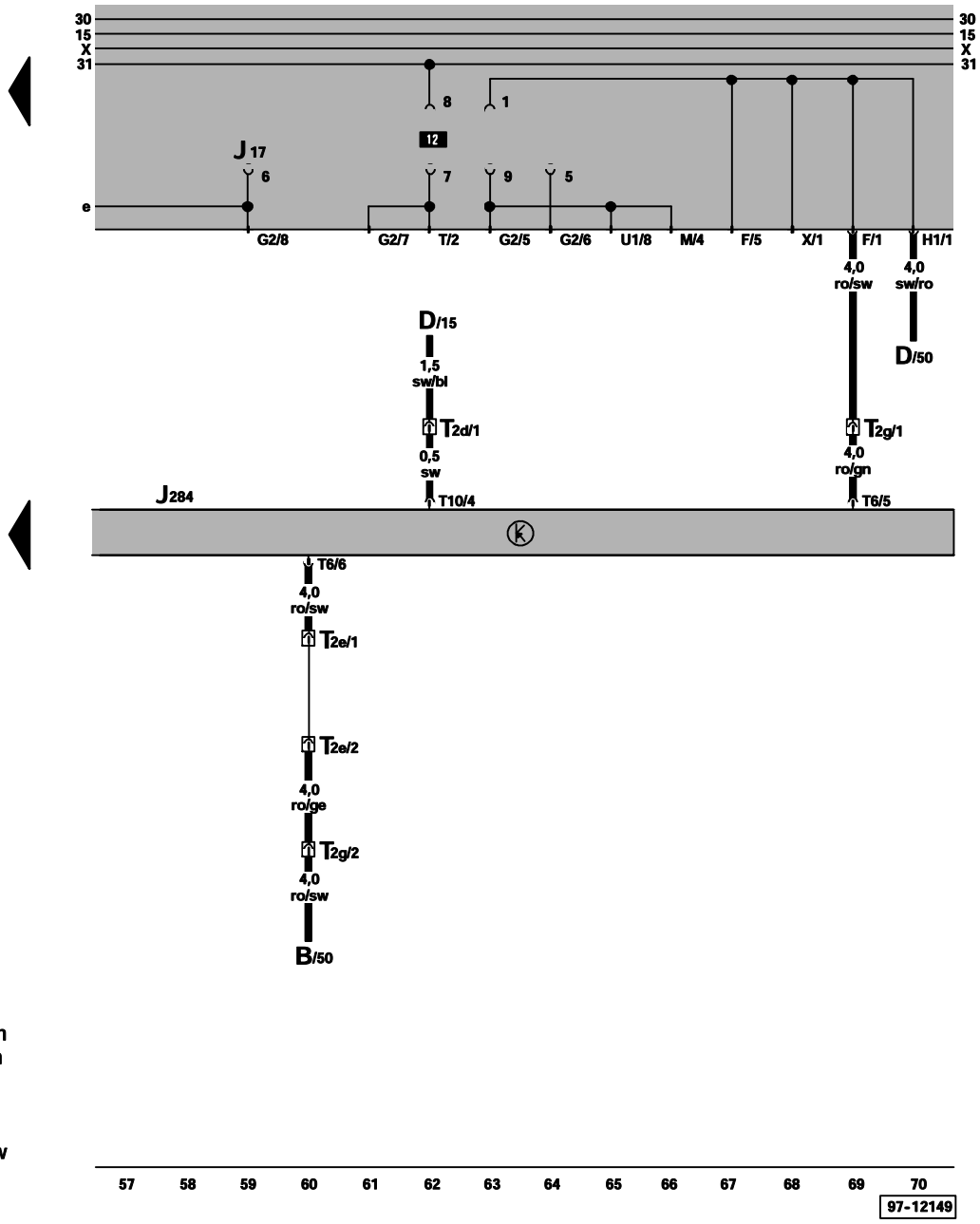

ws = white
sw = black
ro = red
br = brown
gn = green
bl = blue
gr = grey
li = violet
ge = yellow

B – Starter
D – Ignition/Starter Switch
J17 – Fuel Pump (FP) Relay
J284 – Alarm System Control Module, behind instrument panel, left, above fuse/relay panel
T2d – Double Connector, behind fuse/relay panel
T2e – Double Connector, behind fuse/relay panel
T2g – Double Connector, behind fuse/relay panel
T6 – 6-Pin Connector
T10 – 10-Pin Connector

Power sunroof,

from August 1994

Relay location
For relay location and multiple connectors see also section "component locations".

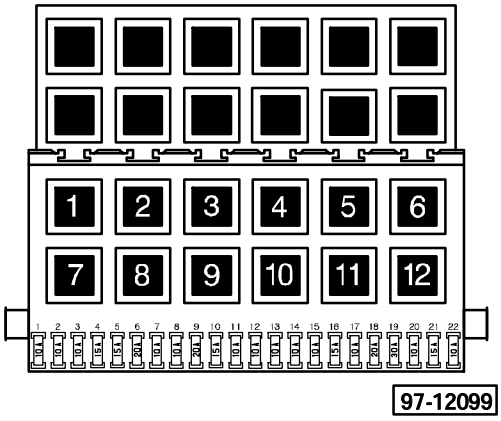

Fuse colors

30A – green
25A – white
20A – yellow
15A – blue
10A – red

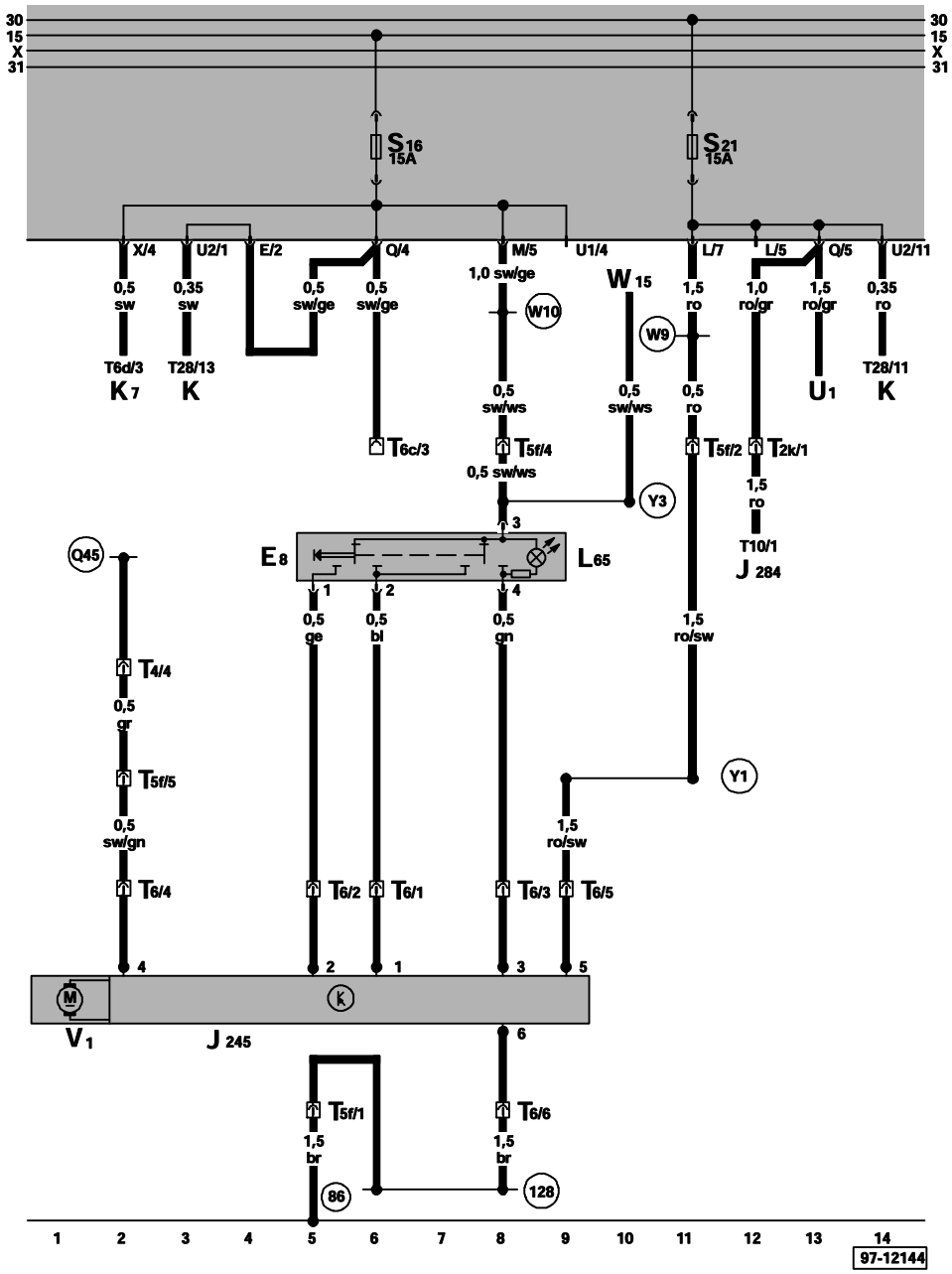

ws = white
sw = black
ro = red
br = brown
gn = green
bl = blue
gr = grey
li = violet
ge = yellow

E8 – Sunroof Switch
J245 – Power Sunroof Control Module
J284 – Alarm System Control Module
K – Instrument Cluster
K7 – Brake and Parking Brake Warning Light
L65 – Sunroof Switch Light
T2k – Double Connector, behind fuse/relay panel
T4 – 4-Pin Connector, below rear seat bench
T5f – 5-Pin Connector, behind fuse/relay panel
T6 – 6-Pin Connector, near interior light
T6c – 6-Pin Connector, behind fuse/relay panel
T6d – 6-Pin Connector, on Brake and Parking Brake Warning Light
T10 – 10-Pin Connector, on Alarm System Control Module
T28 – 28-Pin Connector, on instrument cluster
U1 – Cigarette Lighter
V1 – Sunroof Motor

W15 – Interior Light With Delay Switch
86 – Ground connection –1–, in rear wiring harness
128 – Ground connection –1–, in interior light wiring harness
Q45 – Wire connection (comfort), in power window wiring harness
W9 – Plus connection (30), in rear wiring harness
W10 – Plus connection (15), in rear wiring harness
Y1 – Plus connection (30), in interior light wiring harness
Y3 – Plus connection (15), in interior light/sunroof wiring harness

Air ag,

from cto er 1994

Relay location
For relay location and multiple connectors see also section "component locations".

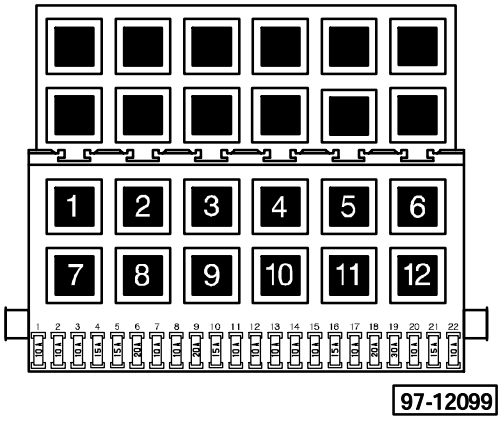

Fuse colors

30A – green
25A – white
20A – yellow
15A – blue
10A – red

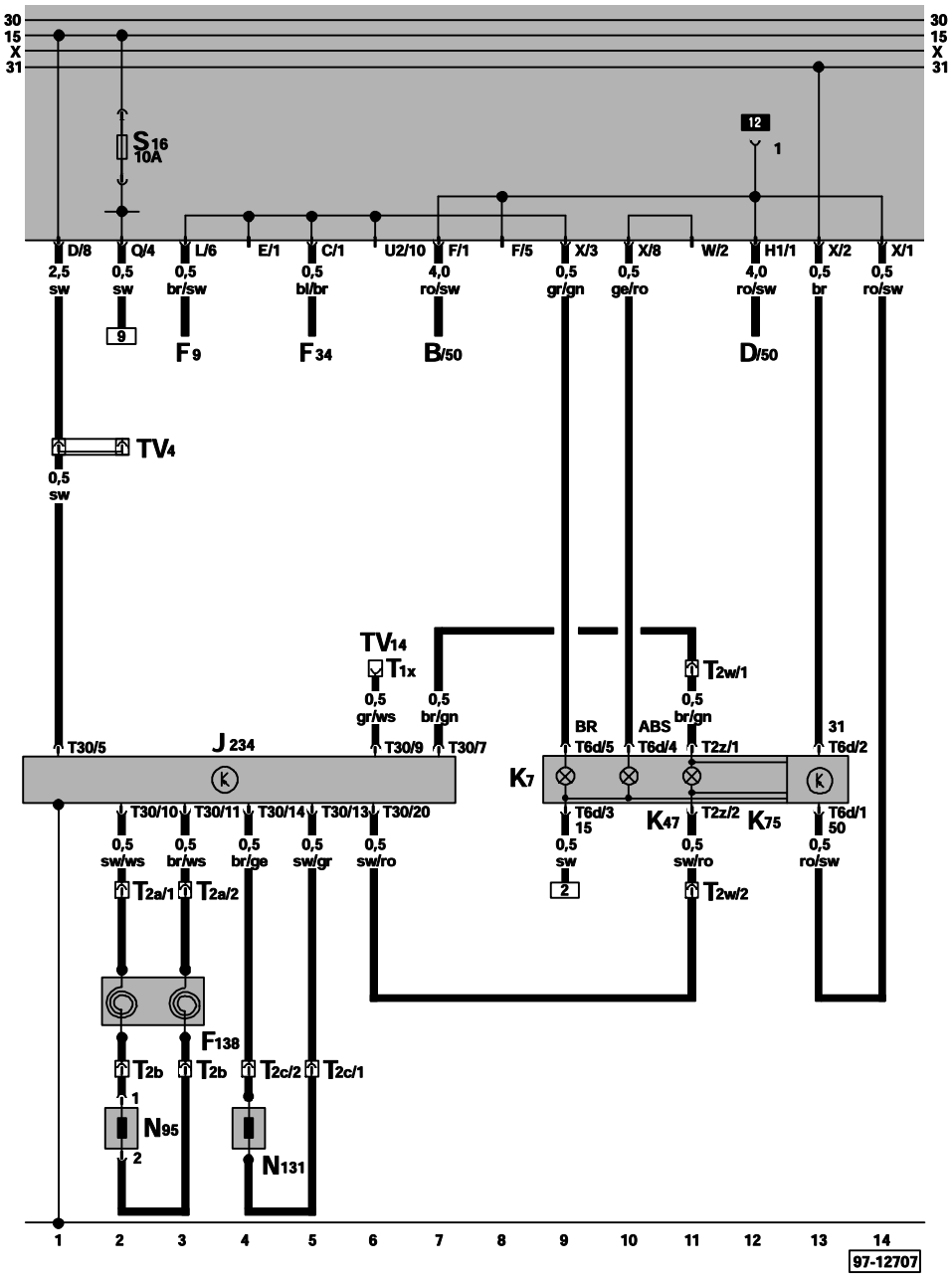

ws = white
sw = black
ro = red
br = brown
gn = green
bl = blue
gr = grey
li = violet
ge = yellow

B – Starter
D – Ignition/Starter Switch
F9 – Parking Brake Warning Light Switch (01114)
F34 – Brake Fluid Level Warning Switch
F138 – Airbag Spiral Spring/Return Spring With Slip Ring
J234 – Airbag Control Module, behind console
K7 – Brake and Parking Brake Warning Light
K47 – ABS Warning Light
K75 – Airbag Malfunction Indicator Lamp (MIL)
N95 – Driver's Side Airbag Igniter (00588)
N131 – Passenger's Side Airbag Igniter 1 (00589)
T1x – Single Connector, on Data Link Connector (DLC) Wire Connector
T2a – Double Connector, behind steering column switch cover
T2b – Double Connector, in steering wheel
T2c – Double Connector, behind instrument panel, right
T2w – Double Connector, behind fuse/relay panel
T2z – Double Connector
T6d – 6-Pin Connector
T30 – 30-Pin Connector
TV14 – Data Link Connector (DLC) Wire Connector, behind console

tereo radio wit C c anger and eig t spea ers,

from August 1994

Relay location
For relay location and multiple connectors see also section "component locations".

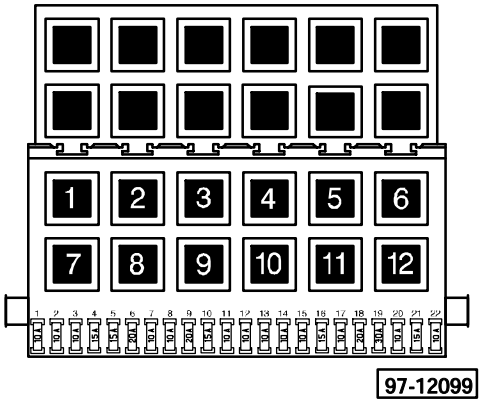

Fuse colors

30A – green
25A – white
20A – yellow
15A – blue
10A – red

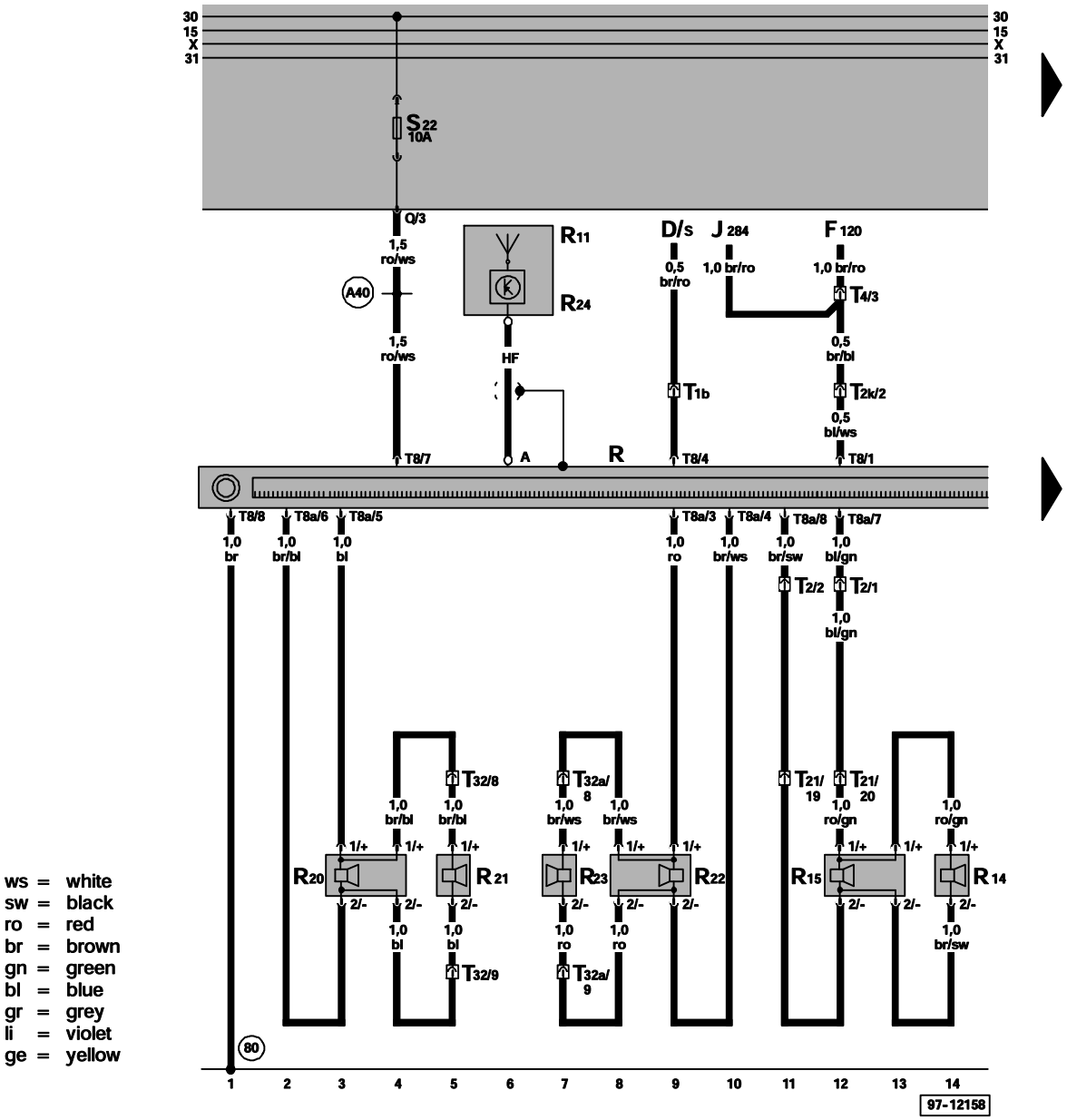

ws = white
sw = black
ro = red
br = brown
gn = green
bl = blue
gr = grey
li = violet
ge = yellow

D – Ignition/Starter Switch
F120 – Hood Alarm Switch
J284 – Alarm System Control Module
R – Radio
R11 – Antenna
R14 – Left Rear Tweeter, in door
R15 – Left Rear Woofer, in door
R20 – Left Front Tweeter, in instrument panel
R21 – Left Front Woofer, in driver's door
R22 – Right Front Tweeter, in instrument panel
R23 – Right Front Woofer, in passenger's door
R24 – Antenna Amplifier
T1b – Single Connector, behind fuse/relay panel
T2 – Double Connector, behind fuse/relay panel
T2k – Double Connector, behind fuse/relay panel
T4 – 4-Pin Connector, behind fuse/relay panel
T8 – 8-Pin Connector, on radio
T8a – 8-Pin Connector, on radio
T21 – 21-Pin Connector, behind left B-pillar trim, lower part
T32 – 32-Pin Connector, on left A-pillar, lower part
T32a – 32-Pin Connector, on right A-pillar, lower part

(80) – Ground connection –1–, in instrument panel wiring harness

(A40) – Plus connection (30), in instrument panel wiring harness

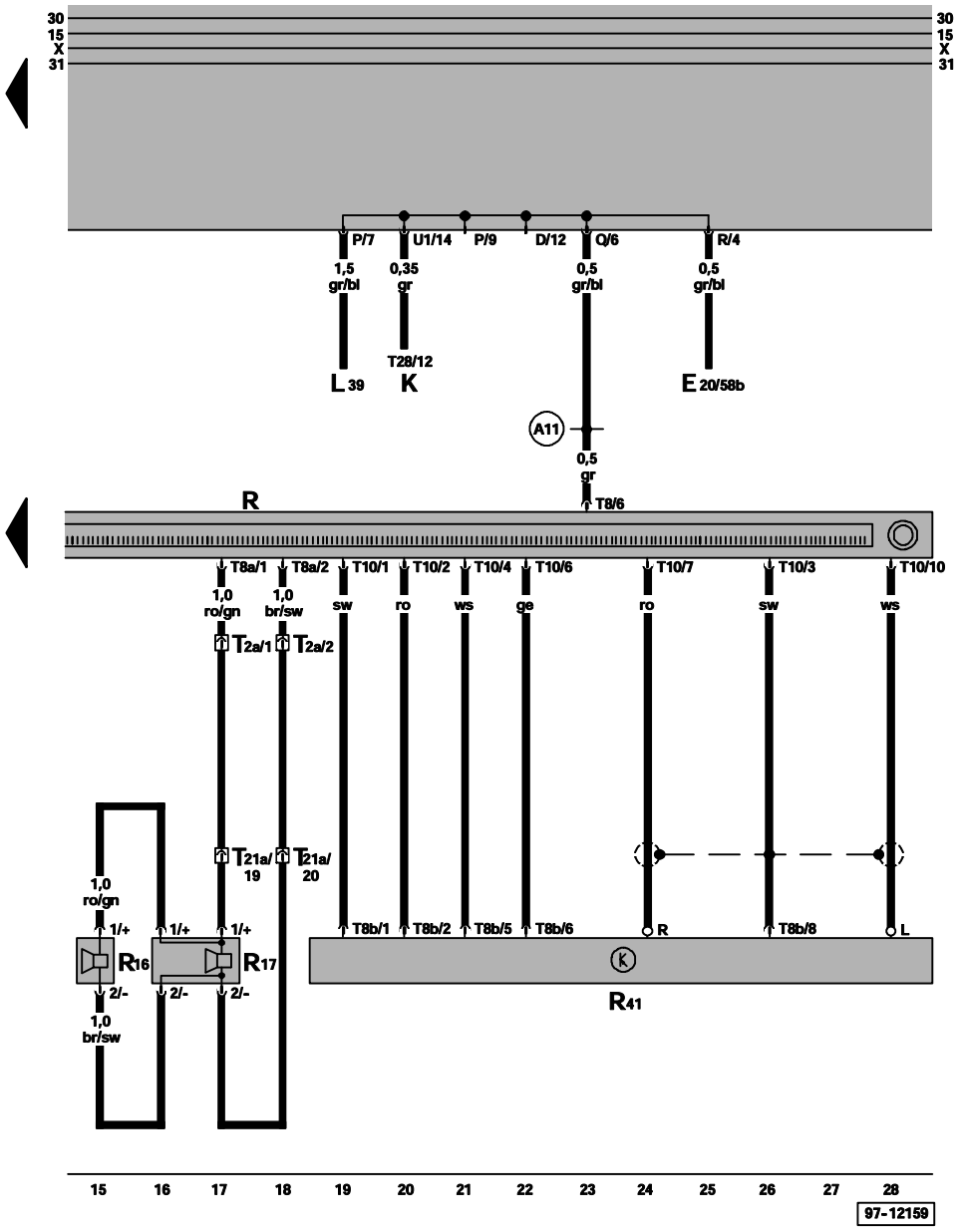

ws = white
sw = black
ro = red
br = brown
gn = green
bl = blue
gr = grey
li = violet
ge = yellow

E20 – Instrument Panel Light Dimmer Switch
K – Instrument Cluster
L39 – Rear Window Defogger Switch Light
R – Radio
R16 – Right Rear Tweeter, in door
R17 – Right Rear Woofer, in door
R41 – CD Changer Unit, in luggage compartment
T2a – Double Connector, behind fuse/relay panel
T8 – 8-Pin Connector, on radio
T8a – 8-Pin Connector, on radio
T8b – 8-Pin Connector, on CD changer Unit
T10 – 10-Pin Connector
T21 – 21-Pin Connector, behind right B-pillar trim, lower part
T28 – 28-Pin Connector, on instrument cluster
A11 – Plus connection (58b) in instrument panel wiring harness

Coolant fan, t ree speeds, 450W, code AAA,

from August 1994

Relay location
For relay location and multiple connectors see also section "component locations".

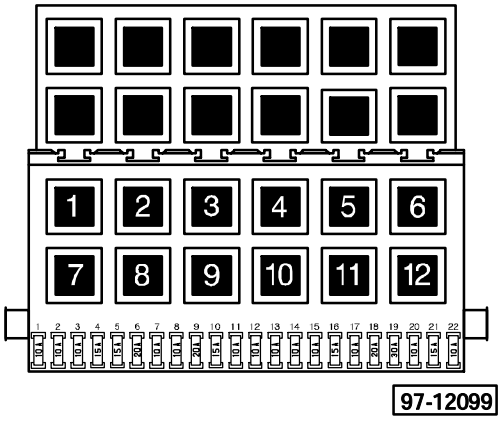

Fuse colors

30A – green
25A – white
20A – yellow
15A – blue
10A – red

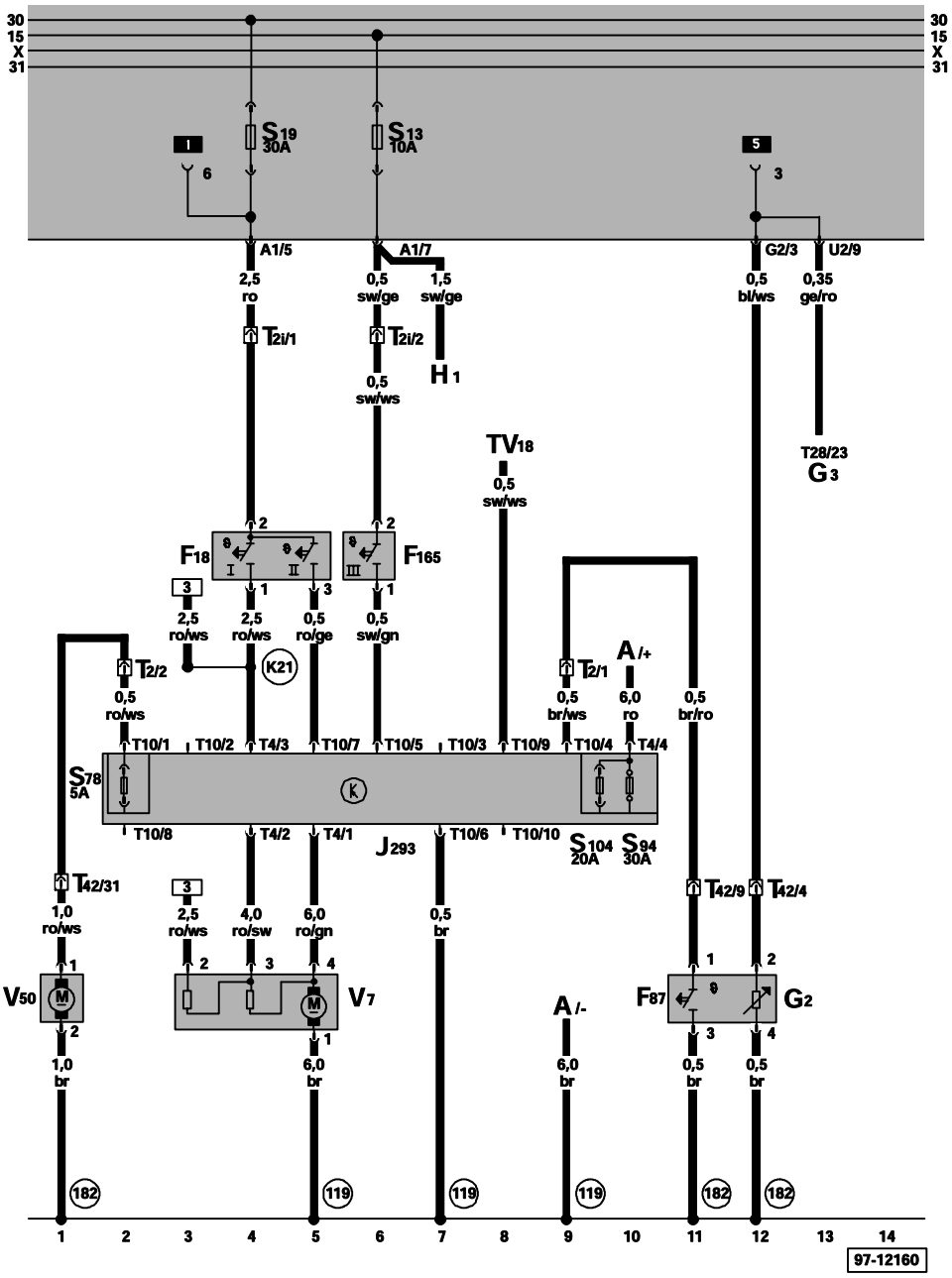

ws = white
sw = black
ro = red
br = brown
gn = green
bl = blue
gr = grey
li = violet
ge = yellow

A – Battery
F18 – Coolant Fan Control (FC) Thermal Switch*
F87 – After-Run Coolant Fan Control (FC) Thermal Switch*
F165 – Third Speed Coolant Fan Control (FC) Thermal Switch*
G2 – Engine Coolant Temperature (ECT) Sensor (01039)
G3 – Engine Coolant Temperature (ECT) Gauge
H1 – Dual Horns
J293 – Coolant FC (Fan Control) Control Module, in engine compartment, left
S78 – Engine Coolant Pump Fuse
S94 – Third Speed Coolant Fan Fuse
S104 – Second Speed Coolant Fan Fuse
T2 – Double Connector, behind fuse/relay panel
T2i – Double Connector, behind fuse/relay panel
T4 – 4-Pin Connector
T10 – 10-Pin Connector
T28 – 28-Pin Connector, on instrument cluster
T42 – 42-Pin Connector, on left cylinder head
TV18 – Distributor for Terminal Xa, above fuse/relay panel
V7 – Coolant Fan
V50 – Coolant Pump
119 – Ground connection –1–, in headlight wiring harness
182 – Ground connection –1–, in engine compartment wiring harness (6 Cylinder)
K21 – Wire connection –1–, in coolant fan wiring harness
* – Switch levels see Repair Manual Passat 1994 " Engine

Coolant fan, t ree speeds, 450W, code AA ,

from August 1994

Relay location
For relay location and multiple connectors see also section "component locations".

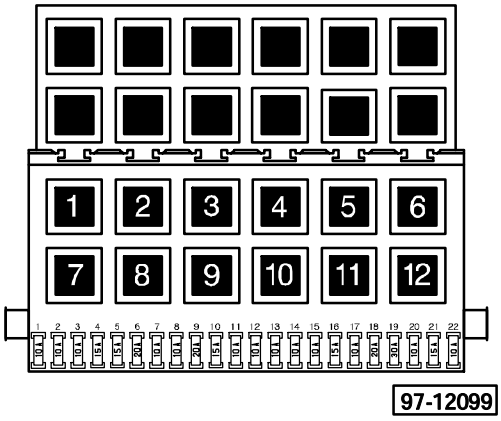

Fuse colors

30A – green
25A – white
20A – yellow
15A – blue
10A – red

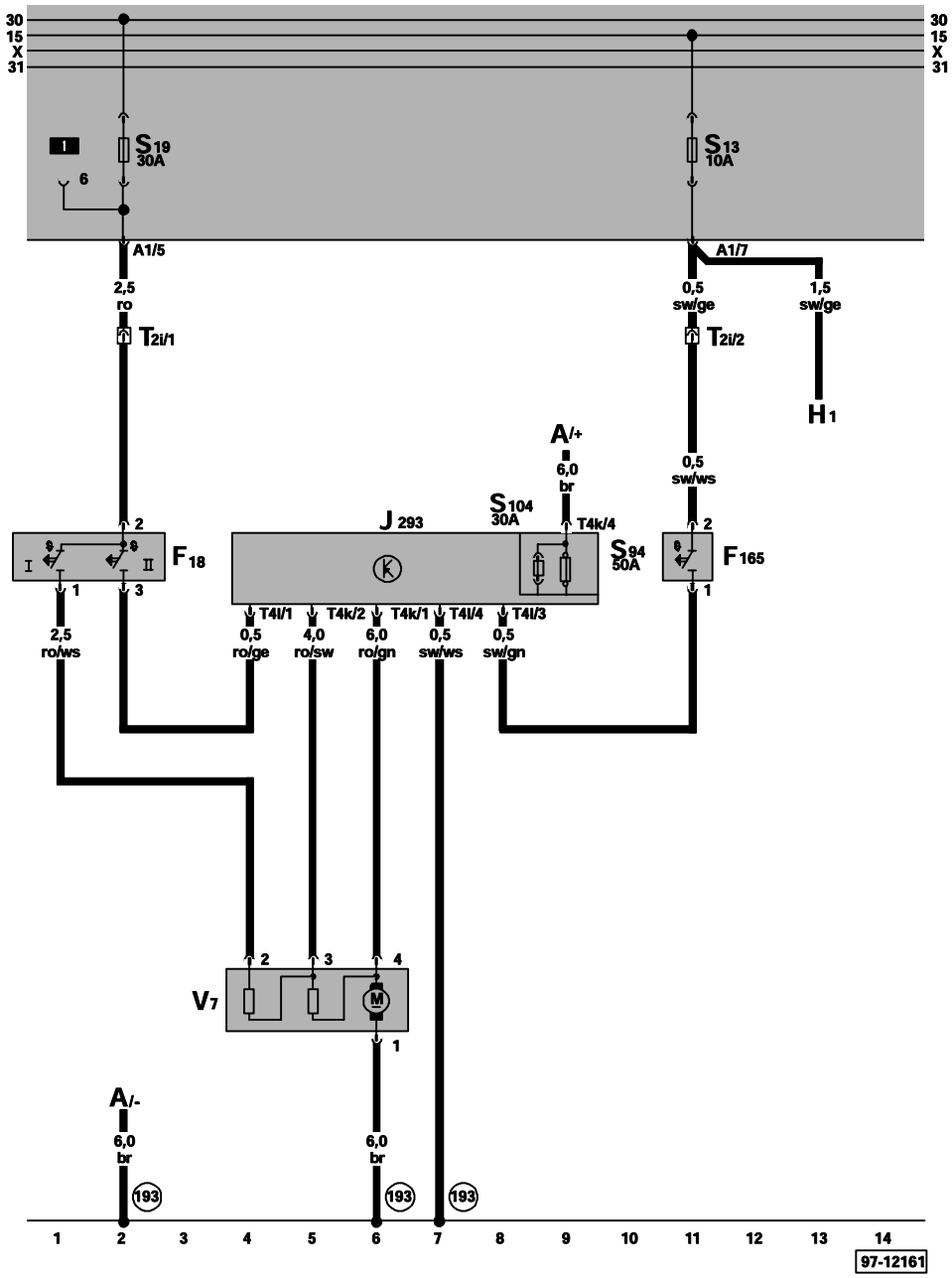

ws = white
sw = black
ro = red
br = brown
gn = green
bl = blue
gr = grey
li = violet
ge = yellow

A – Battery
F18 – Coolant Fan Control (FC) Thermal Switch
F165 – Third Speed Coolant Fan Control (FC) Thermal Switch
H1 – Dual Horns
J293 – Coolant FC (Fan Control) Control Module, in engine compartment, left
S94 – Third Speed Coolant Fan Fuse
S104 – Second Speed Coolant Fan Fuse
T2i – Double Connector, behind fuse/relay panel
T4k – 4-Pin Connector
T4l – 4-Pin Connector
V7 – Coolant Fan

(193) – Ground connection –1–, in coolant fan wiring harness

Daytime running lights, only Canada

from August 1994

Deviate relay location and fuseplacements as well as the locations of multiple connectors-see section "component locations"

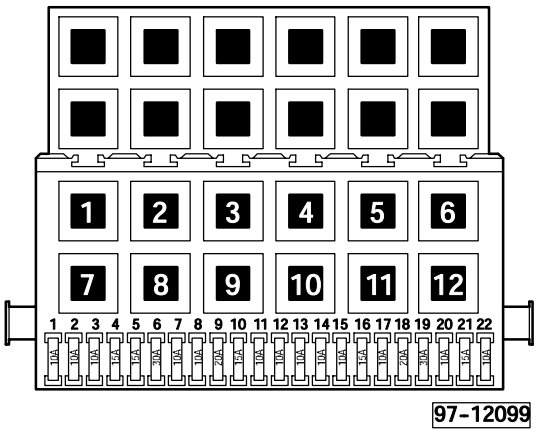

6 Emergency Flas er Relay 21

7 eadlig t Was er ystem Relay 33

10 Fog ig t Relay 53

Note:

Num er in parent eses indicates production control num er stamped on relay ousing.

Fuse colors

30 A	green
25 A	w ite
20 A	yellow
15 A	lue
10 A	red
,5 A	rown
5 A	eige
3 A	iolet

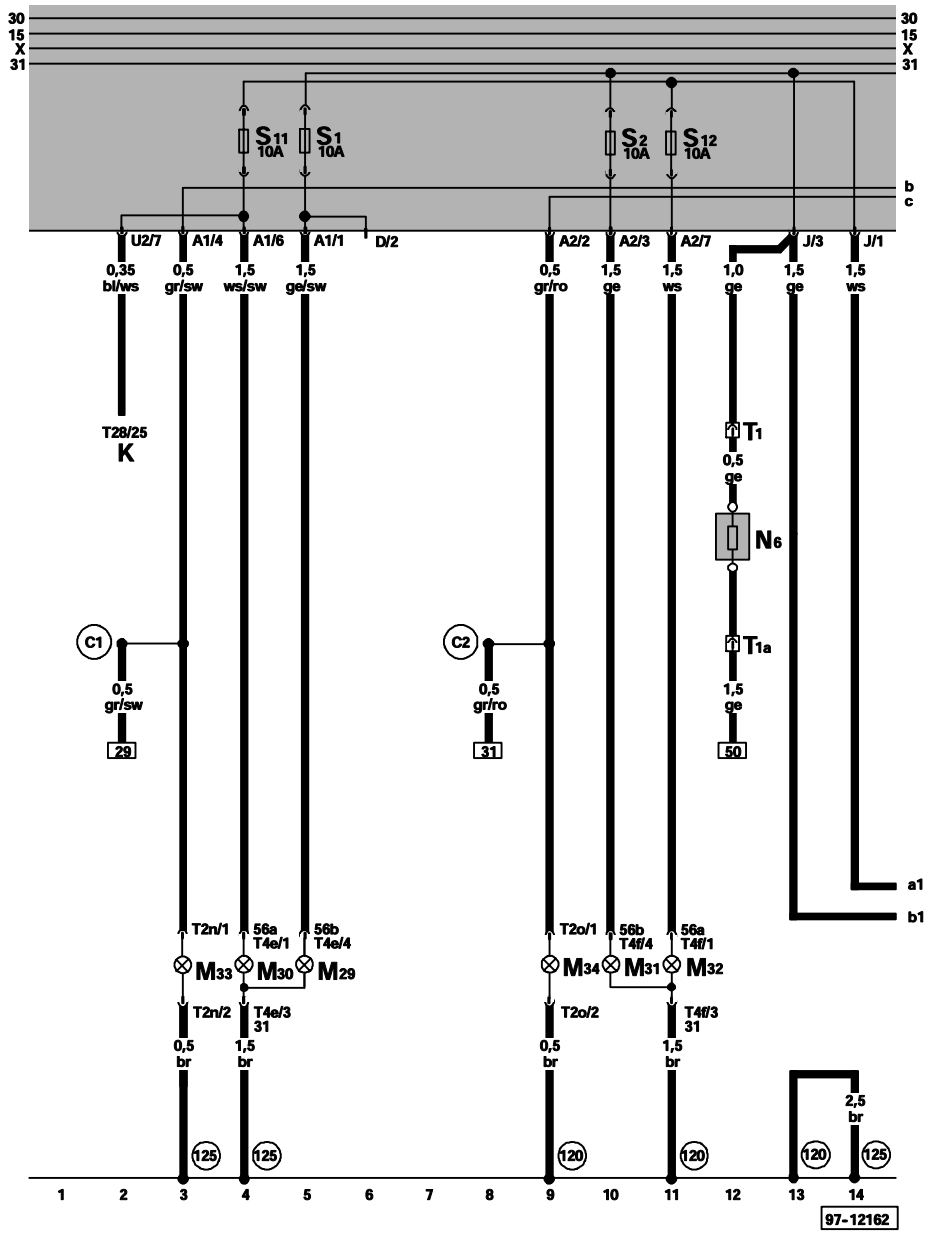

ws	w ite
sw	lac
ro	red
r	rown
gn	green
l	lue
gr	grey
li	iolet
ge	yellow

nstrument Cluster

29	eft ow eam eadlig t
30	eft ig eam eadlig t
31	Rig t ow eam eadlig t
32	Rig t ig eam eadlig t
33	eft Front ide ar er ig t
34	Rig t Front ide ar er ig t

N eries Resistance Wire

1	ingle Connector, e ind fuse/relay panel
1a	ingle Connector, e ind fuse/relay panel
2n	ou le Connector
2o	ou le Connector
4e	4 Pin Connector
4f	4 Pin Connector
28	28 Pin Connector, on instrument cluster

(120) round connection 2 , in eadlig t wiring arness

(125) round connection 3 , in eadlig t wiring arness

(C1) Plus connection 58 , in left front wiring arness

(C2) Plus connection 58R , in left front wiring arness

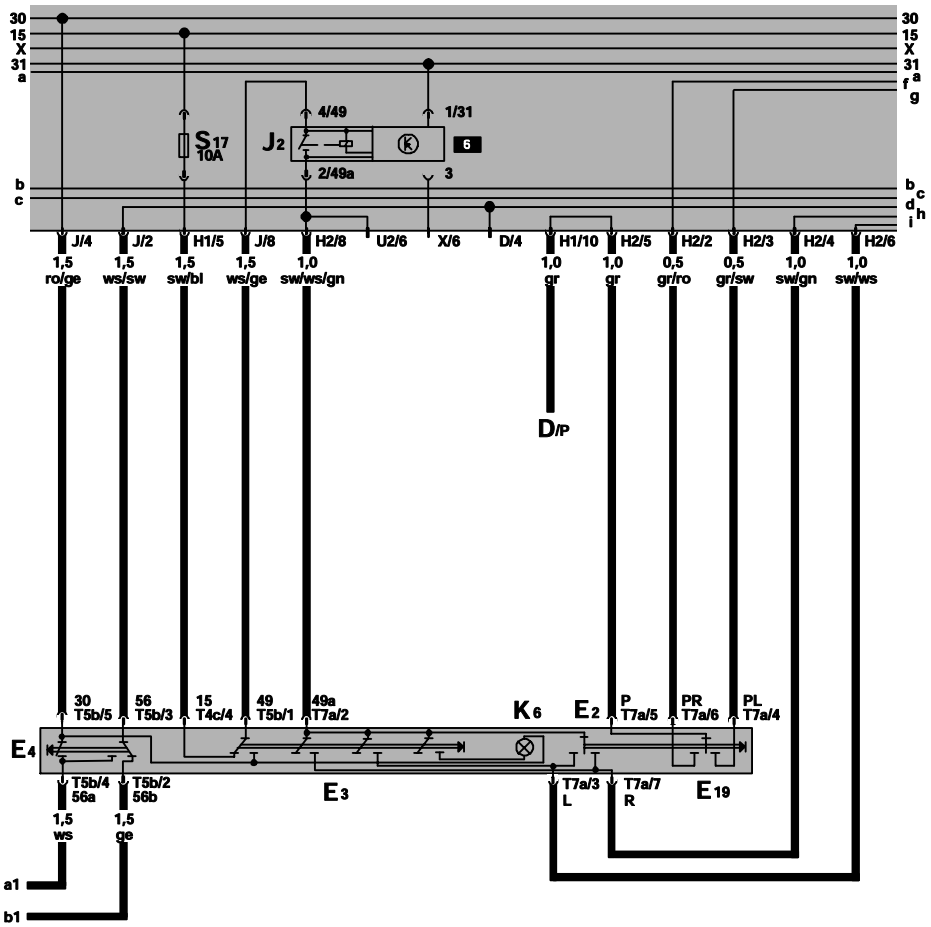

ws = white
sw = black
ro = red
br = brown
gn = green
bl = blue
gr = grey
li = violet
ge = yellow

D – Ignition/Starter Switch
E2 – Turn Signal Switch
E3 – Emergency Flasher Switch
E4 – Headlight Dimmer/Flasher Switch
E19 – Park Light Switch
J2 – Emergency Flasher Relay
K6 – Emergency Flasher Warning Light
T4c – 4-Pin Connector, behind steering column switch cover
T5b – 5-Pin Connector, behind steering column switch cover
T7a – 7-Pin Connector, behind steering column switch cover

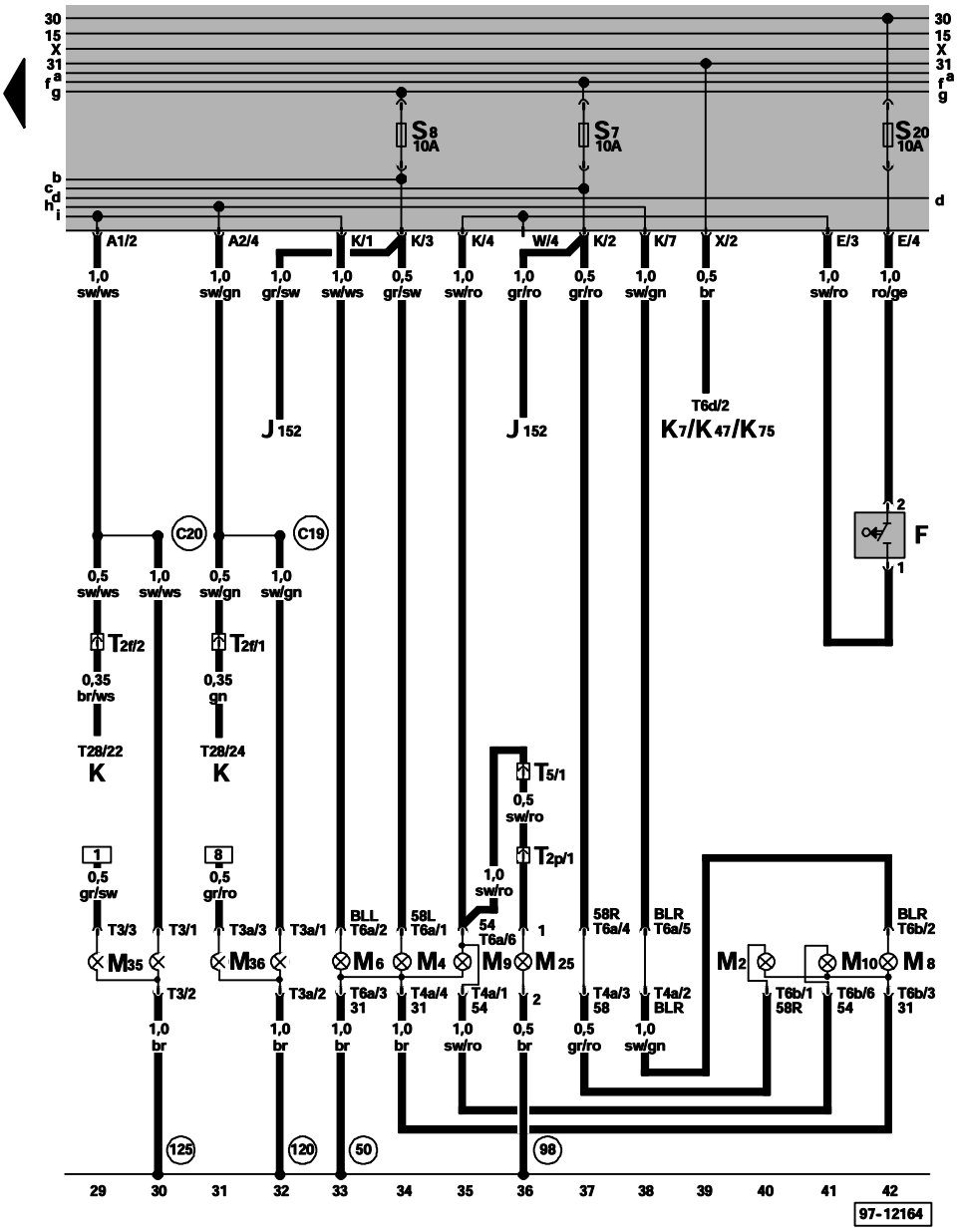

ws = white
sw = black
ro = red
br = brown
gn = green
bl = blue
gr = grey
li = violet
ge = yellow

F – Brake Light Switch
J152 – Radio/Parking Light Warning Buzzer
K – Instrument Cluster
K7 – Brake and Parking Brake Warning Light
K47 – ABS Warning Light
K75 – Airbag Malfunction Indicator Lamp (MIL)
M2 – Right Tail Light
M4 – Left Tail Light
M6 – Left Rear Turn Signal Light
M8 – Right Rear Turn Signal Light
M9 – Left Brake Light
M10 – Right Brake Light
M25 – High-Mount Brake Light
M35 – Left Front Turn Signal and Side Marker Light
M36 – Right Front Turn Signal and Side Marker Light
T2f – Double Connector, behind fuse/relay panel
T2p – Double Connector, in rear lid
T3 – 3-Pin Connector
T3a – 3-Pin Connector
T4a – 4-Pin Connector, on tail light, left
T5 – 5-Pin Connector, in luggage compartment, left
T6a – 6-Pin Connector, on tail light, left
T6b – 6-Pin Connector, on tail light, right
T6d – 6-Pin Connector, on Brake and Parking Brake Warning Light
T28 – 28-Pin Connector, on instrument cluster

(50) – Ground connection, in luggage compartment, left

(98) – Ground connection, in rear lid wiring harness

(120) – Ground connection –2–, in headlight wiring harness

(125) – Ground connection –3–, in headlight wiring harness

(C19) – Wire connection (right turn signal), in headlight wiring harness

(C20) – Wire connection (left turn signal), in headlight wiring harness

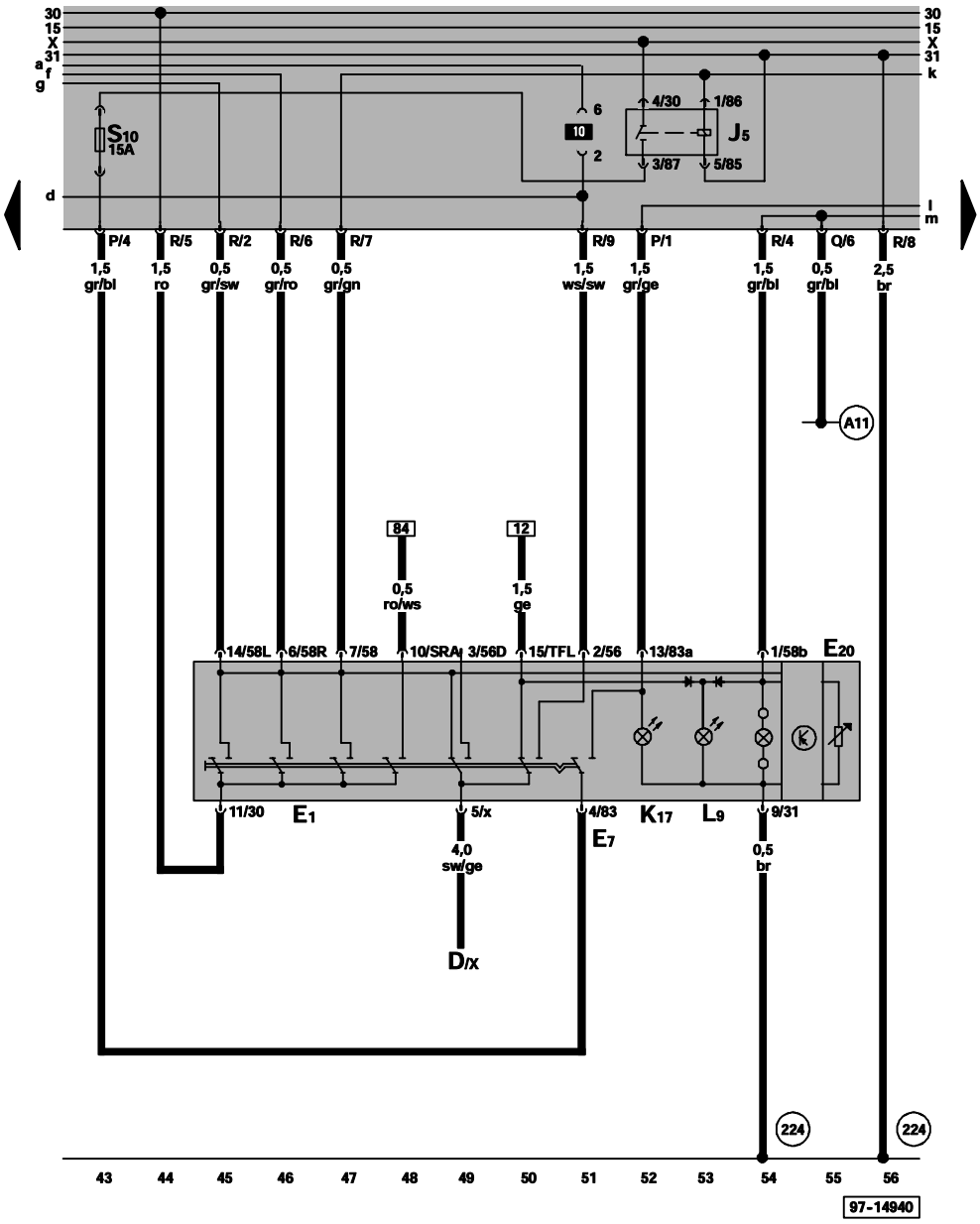

ws	w ite
sw	lac
ro	red
r	rown
gn	green
l	lue
gr	grey
li	iolet
ge	yellow

gnition/ tarter witc
E1 ig t witc
E Fog ig t witc
E20 nstrument Panel ig t immer witc
5 Fog ig t Relay
1 Fog ig t ndicator ig t
9 eadlig t witc ig t

(224) round connection, in lig t switc wiring amess

(A11) plus connection 58 in instrument wiring panel amess

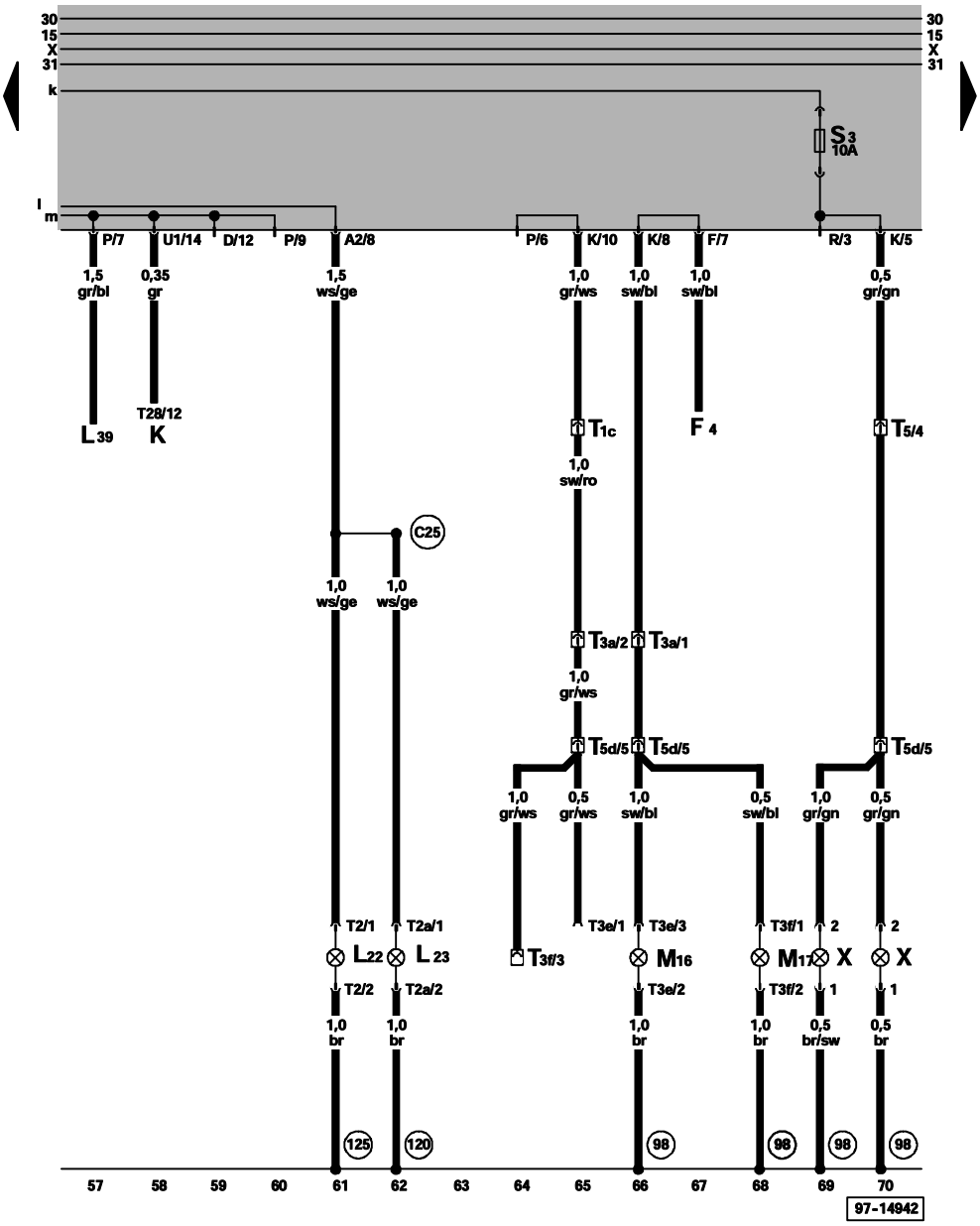

ws w ite
sw lac
ro red
r rown
gn green
l lue
gr grey
li iolet
ge yellow

F4 ac p ig t witc
nstrument Cluster
22 eft Front Fog ig t
23 Rig t Front Fog ig t
39 Rear Window efogger witc ig t
1 eft ac p ig t
1 Rig t ac p ig t
1c ingle Connector, in luggage compartment, left
2 ou le Connector
2a ou le Connector
3a 3 Pin Connector, in luggage compartment, left
3e 3 Pin Connector
3f 3 Pin Connector
5 5 Pin Connector, in luggage compartment, left
5d 5 Pin Connector, in rear lid
28 28 Pin Connector, on instrument cluster
icense Plate ig t

98 round connection, in rear lid wiring arness
120 round connection 2 , in eadlig t wiring arness
125 round connection 3 , in eadlig t wiring arness
C25 Wire connection fog lig ts , in front lig t wiring arness

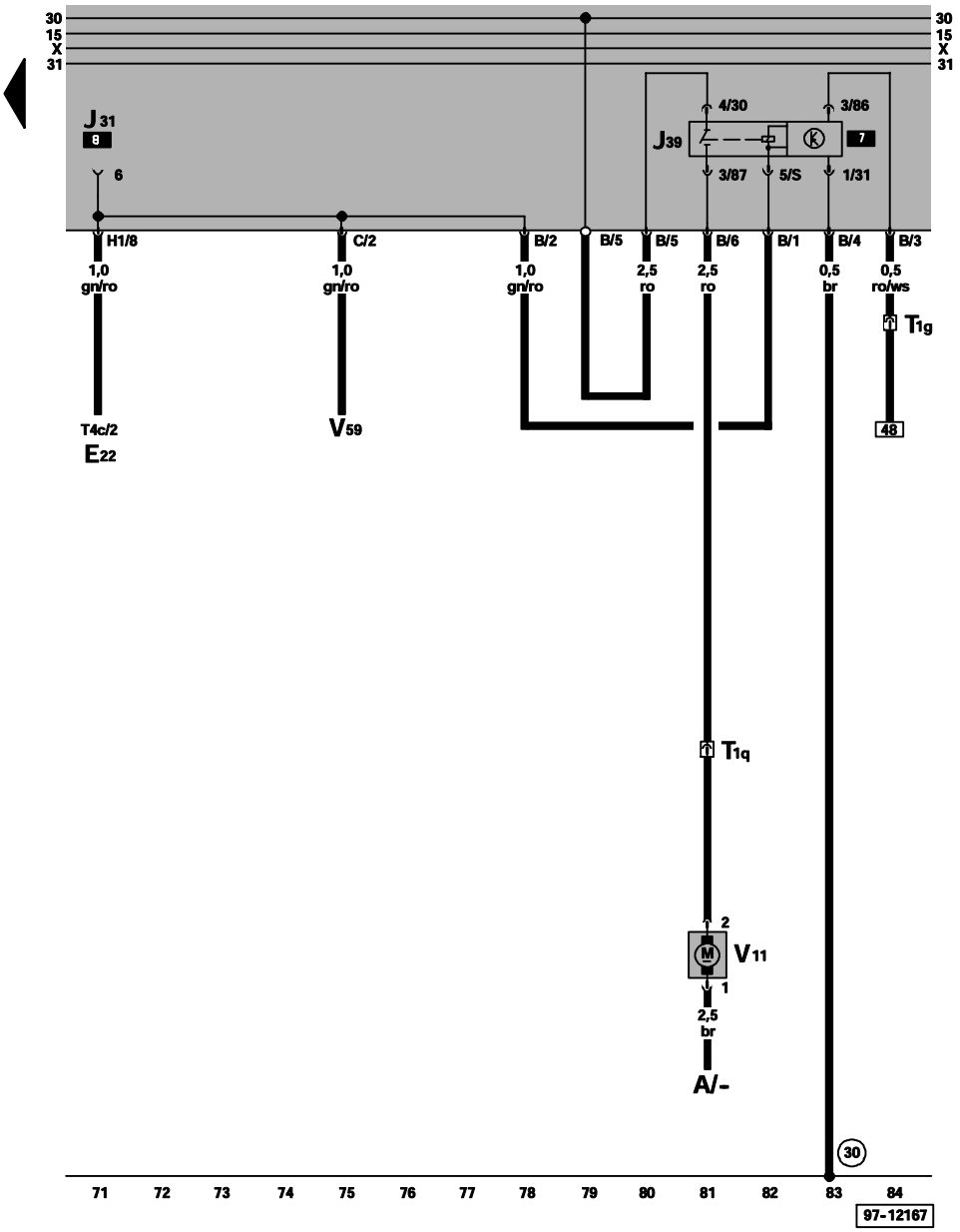

ws = white
sw = black
ro = red
br = brown
gn = green
bl = blue
gr = grey
li = violet
ge = yellow

A – Battery
E22 – Windshield Wiper/Washer Switch
J39 – Headlight Washer System Relay
T1g – Single Connector, behind fuse/relay panel
T1q – Single Connector, behind fuse/relay panel
T4c – 4-Pin Connector, behind steering column switch cover
V11 – Headlight Washer Pump
V59 – Windshield and Rear Window Washer Pump

(30) – Ground connection, –1–, beside fuse/relay panel

Air conditioning,
D 2.0l Engine otronic ultiport Fuel n ection F /85 W, code A A,

from Fe ruary 1995

Relay location
For relay location and multiple connectors see also section "component locations".

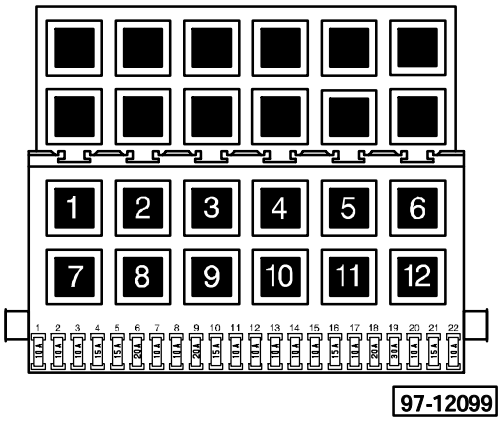

Fuse colors

30A – green
25A – white
20A – yellow
15A – blue
10A – red

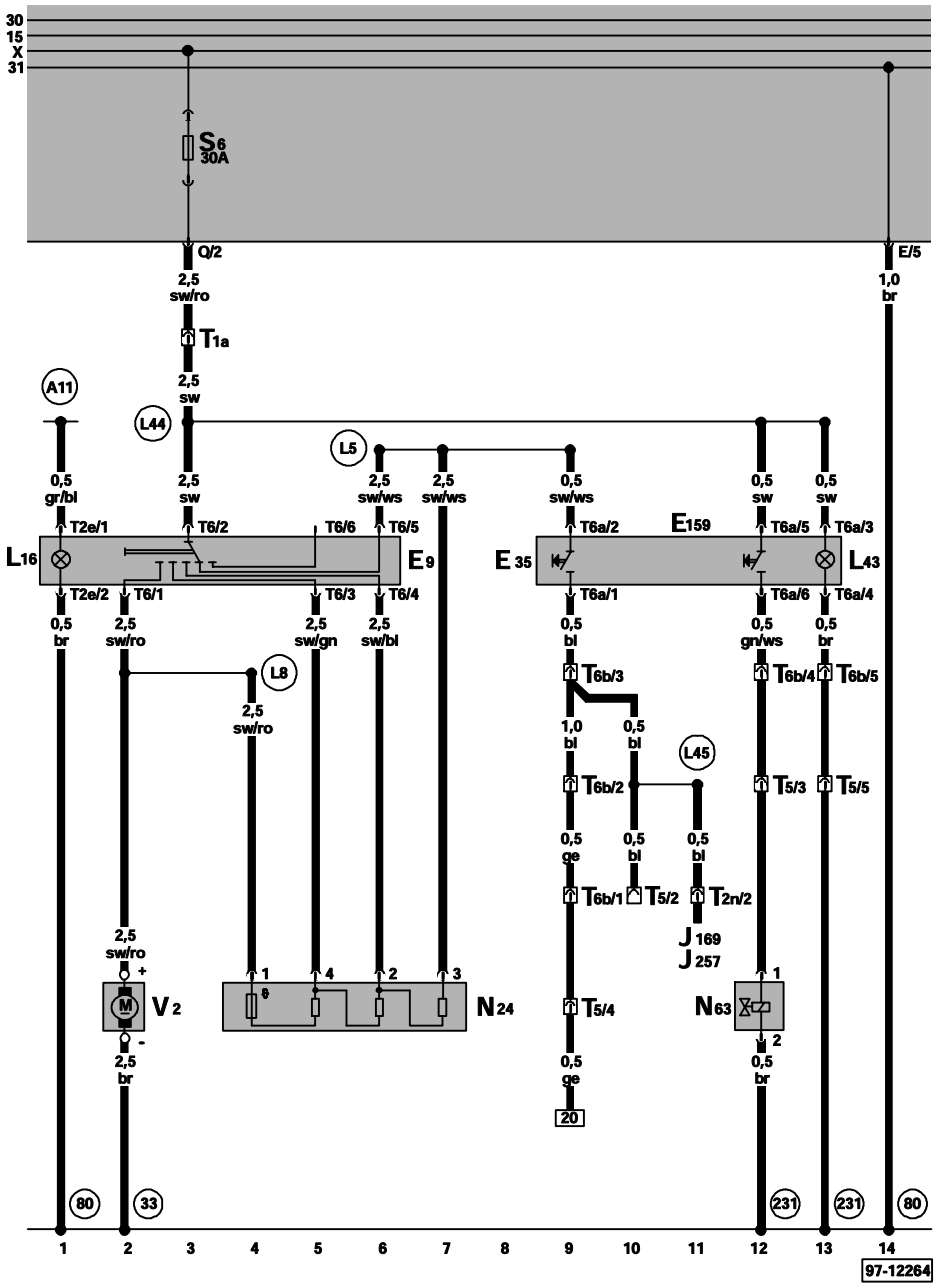

ws = white
sw = black
ro = red
br = brown
gn = green
bl = blue
gr = grey
li = violet
ge = yellow

E9 – Fresh Air Blower Switch
E35 – A/C Switch
E159 – Fresh Air/Recirculating Flap Switch
L16 – Fresh Air Control Lever Light
L43 – A/C Switch Illumination Light
N24 – Fresh Air Blower Series Resistance With Fuse
N63 – Fresh Air/Recirculating Flap Two-Way Valve
T1a – Single Connector, behind fuse/relay panel
T2e – Double Connector
T2n – Double Connector, behind fuse?relay panel
T5 – 5-Pin Connector, behind fuse/relay panel
T6 – 6-Pin Connector
T6a – 6-Pin Connector
T6b – 6-Pin Connector, behind instrument panel, center
V2 – Fresh Air Blower

(33) – Ground connection, behind instrument panel, right

(80) – Ground connection –1–, in instrument panel wiring harness

(231) – Ground connection, in A/C system–coolant fan wiring harness

(A11) – Plus connection (58b) in instrument panel wiring harness

(L5) – Wire connection –1–, in evaporator housing wiring harness

(L8) – Wire connection –4–, in evaporator housing wiring harness

(L44) – Wire connection (X), in A/C system wiring harness

(L45) – Wire connection, in A/C system wiring harness

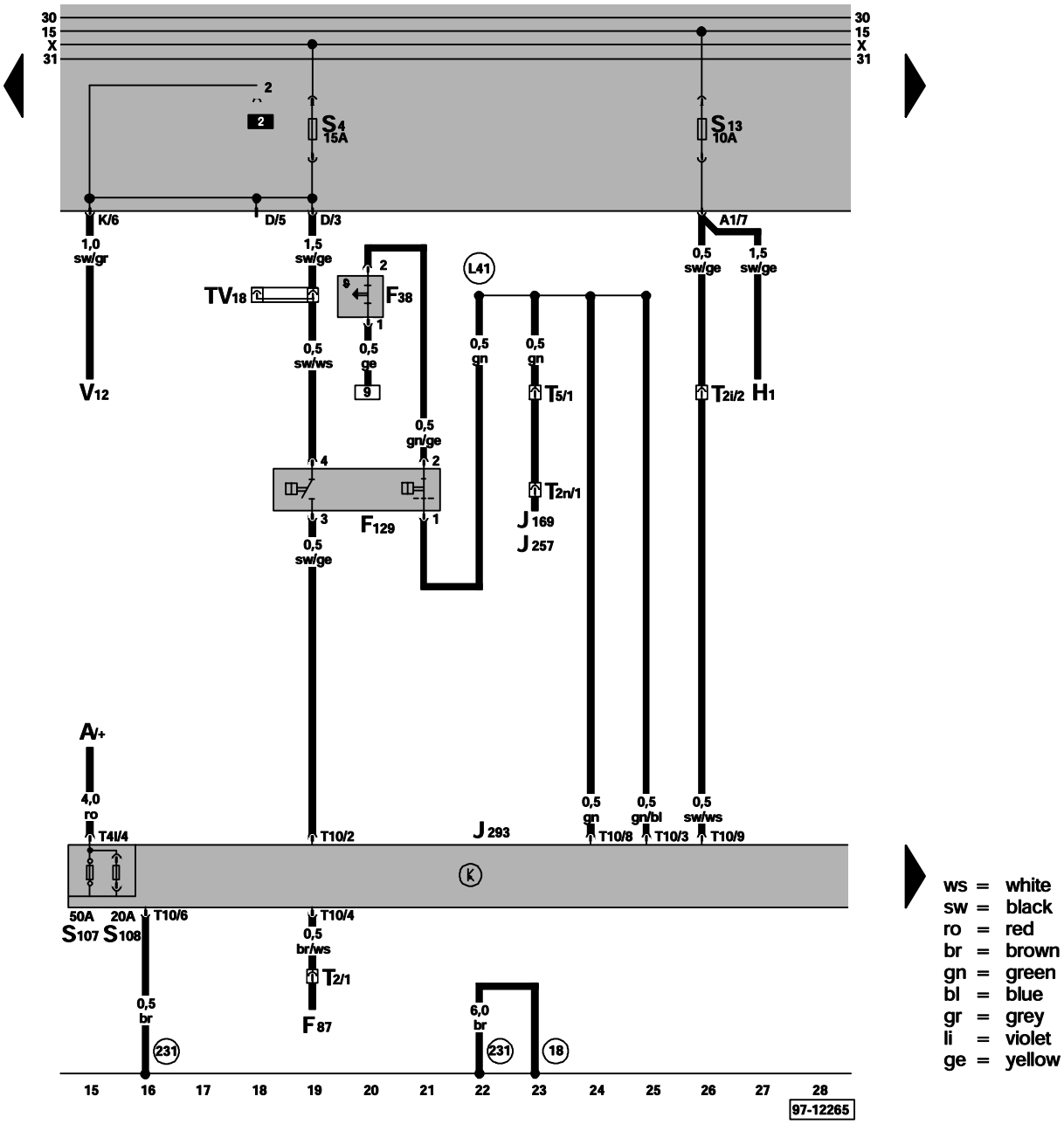

ws = white
sw = black
ro = red
br = brown
gn = green
bl = blue
gr = grey
li = violet
ge = yellow

A – Battery
F38 – Ambient Temperature Switch, in plenum chamber, right
F87 – After-Run Coolant Fan Control (FC) Thermal Switch
F129 – A/C Pressure Switch
H1 – Dual Horns
J220 – Motronic Engine Control Module (ECM)
J293 – Coolant Fan Control (FC) Control Module, in engine compartment, left
S107 – Coolant Fan Second and Third Speed Fuse
S108 – Coolant Fan First Speed and A/C Clutch Fuse
T2 – Double Connector, behind fuse/relay panel
T2i – Double Connector, behind fuse/relay panel
T2n – Double Connector, behind fuse/relay panel
T4l – 4-Pin Connector, on Coolant Fan Control (FC) Control Module
T5 – 5-Pin Connector, behind fuse/relay panel
T10 – 10-Pin connector, on Coolant Fan Control (FC) Control Module
TV18 – Distributor for Terminal Xa, above fuse/relay panel
V12 – Rear Window Wiper Motor
18 – Ground connectiuon, on engine block
231 – Ground connection, in A/C system-coolant fan wiring harness
L42 – Wire connection (A/C on), in A/C system-coolant fan wiring harness

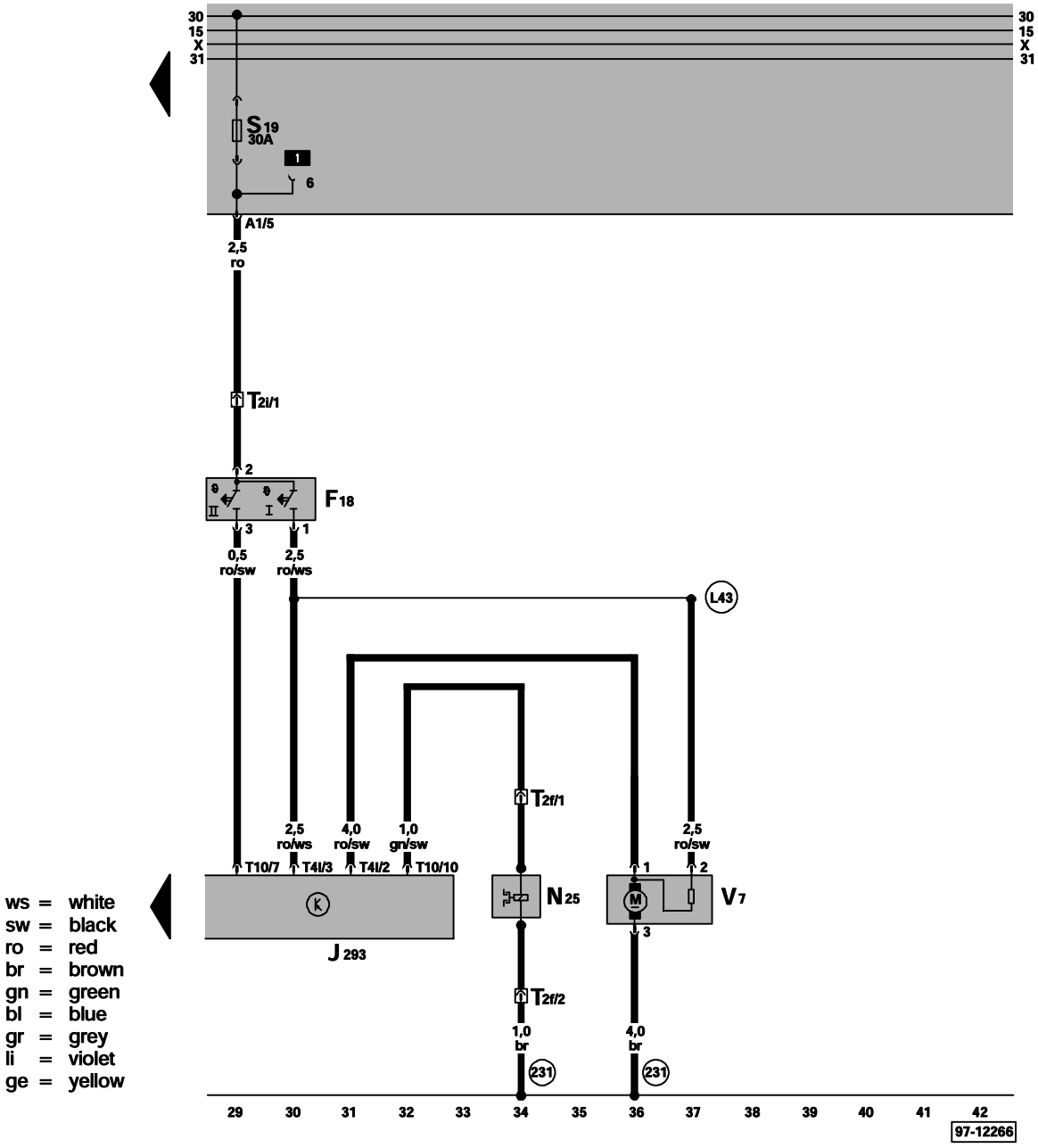

ws = white
sw = black
ro = red
br = brown
gn = green
bl = blue
gr = grey
li = violet
ge = yellow

F18 – Coolant Fan Control (FC) Thermal Switch
J293 – Coolant Fan Control (FC) Control Module, in engine compartment, left
N25 – A/C Clutch
T2f – Double Connector, near compressor
T2i – Double Connector, behind fuse/relay panel
T4l – 4-Pin Connector, on Coolant Fan Control (FC) Control Module
T10 – 10-Pin Connector, on Coolant Fan Control (FC) Control Module
T28 – 28-Pin Connector, on instrument cluster
V7 – Coolant Fan

(231) – Ground connection, in A/C system-coolant fan wiring harness

(L43) – Wire connection (coolant fan), in A/C system-coolant fan wiring harness

Automatic transmission,

D 1.9 Engine ur o iesel Fuel n ection F , W, code 1 ,

from August 1995

Relay location
For relay location and multiple connectors see also section "component locations".

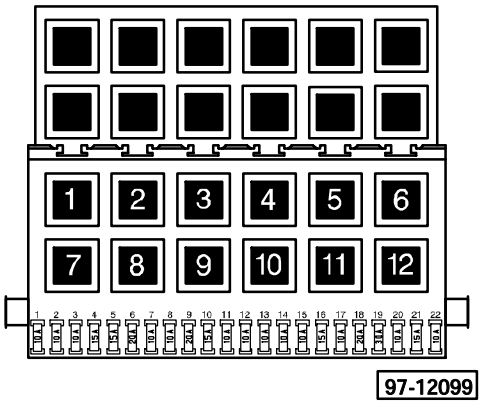

Fuse colors

30A – green
25A – white
20A – yellow
15A – blue
10A – red

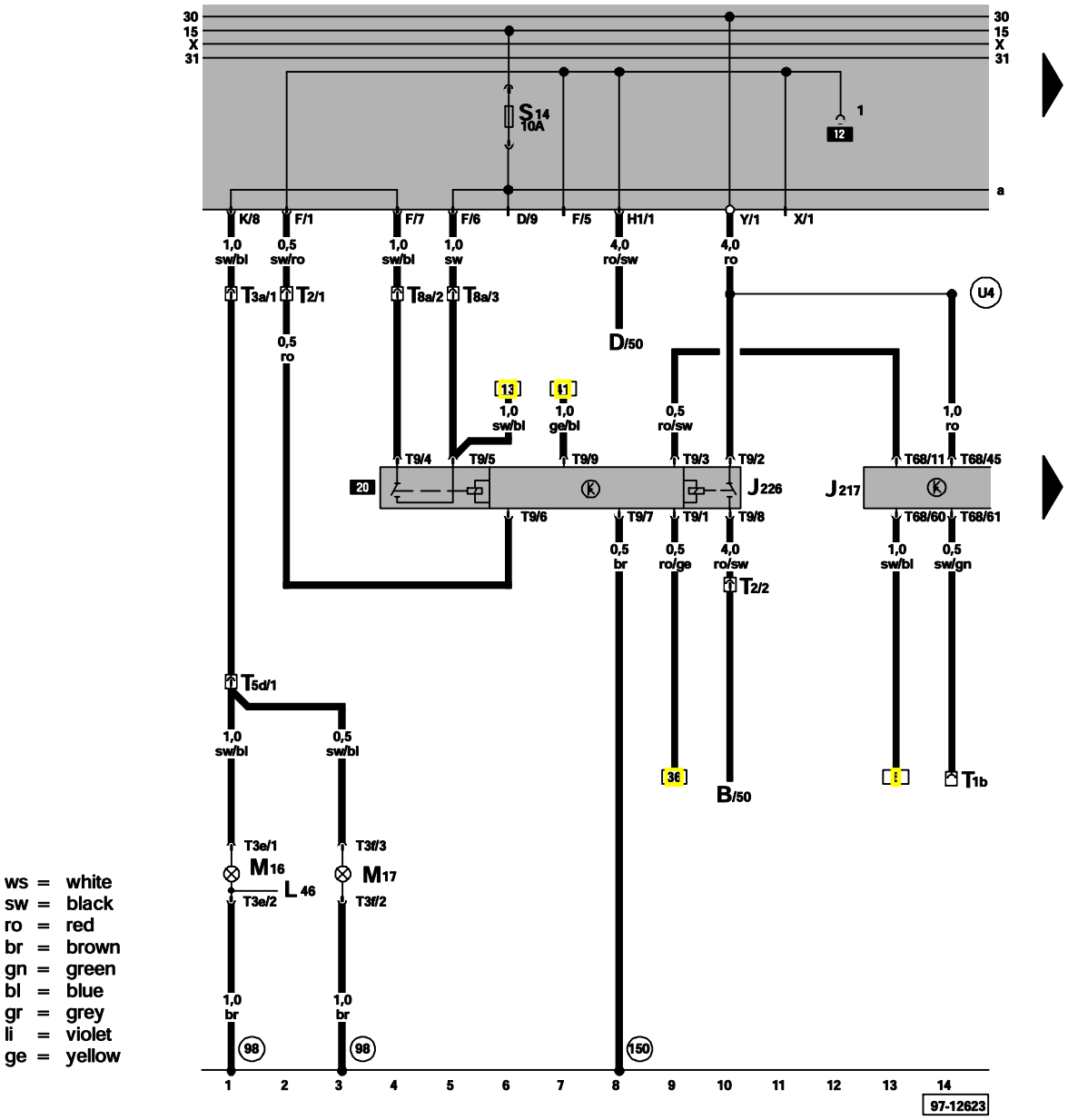

ws = white
sw = black
ro = red
br = brown
gn = green
bl = blue
gr = grey
li = violet
ge = yellow

B – Starter
D – Ignition/Starter Switch
J217 – Transmission Control Module (TCM), below rear seat bench
J226 – Park/Neutral Position (PNP) Relay, behind instrument panel, left
L46 – Left Rear Fog Light
M16 – Left Back-Up Light
M17 – Right Back-Up Light
T1b – Single Connector, connection for cruise control
T2 – Double Connector, behind fuse/relay panel
T3a – 3-Pin Connector, in luggage compartment, left
T3e – 3-Pin Connector
T3f – 3-Pin Connector
T5d – 5-Pin Connector, in rear lid
T8a – 8-Pin Connector, behind fuse/relay panel
T9 – 9-Pin Connector
T68 – 68-Pin Connector, on Transmission Control Module (TCM)
98 – Ground connection, in rear lid wiring harness
150 – Ground connection, in automatic transmission wiring harness
U4 – Wire connection (30), in automatic transmission wiring harness

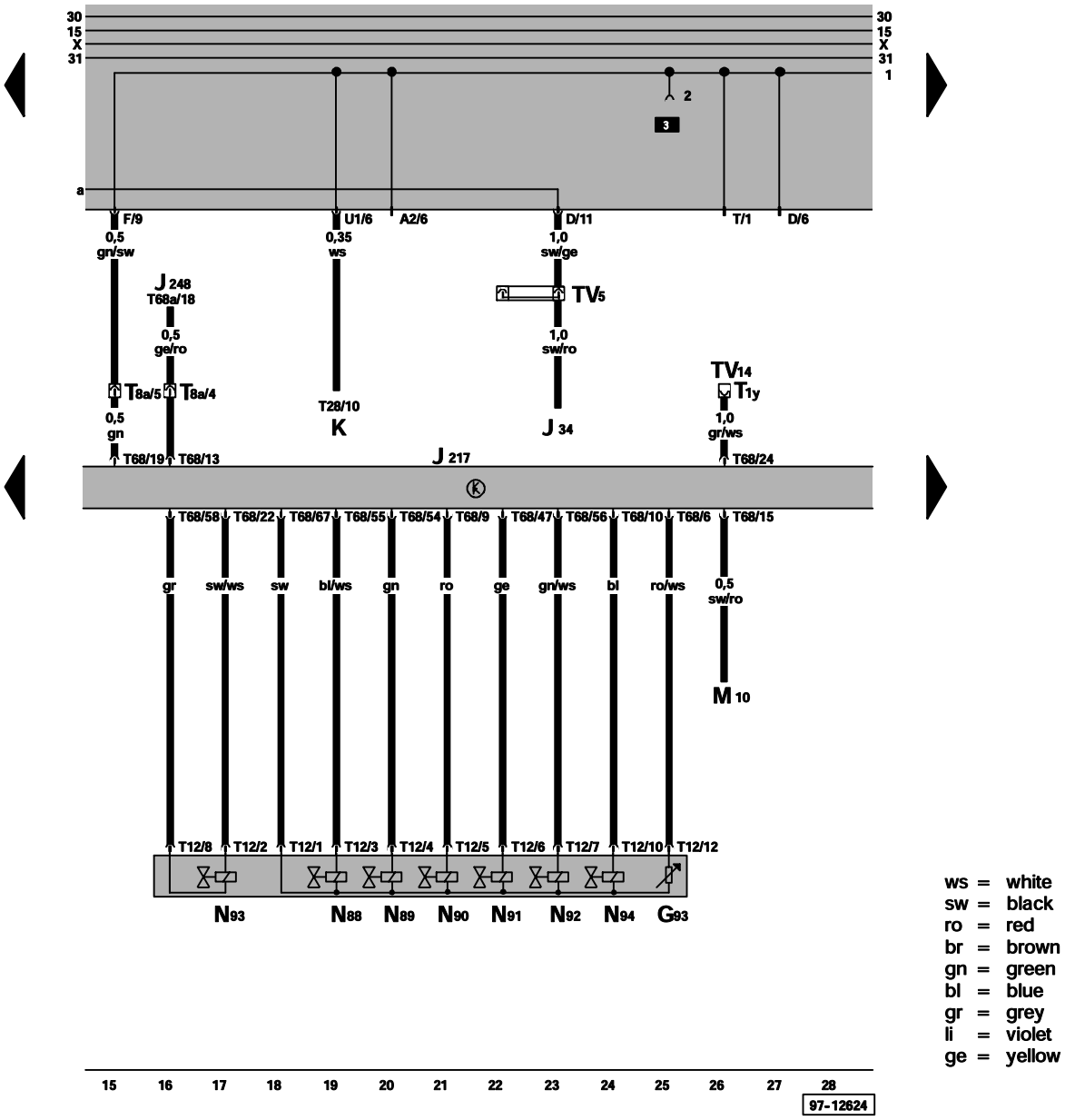

ws = white
sw = black
ro = red
br = brown
gn = green
bl = blue
gr = grey
li = violet
ge = yellow

G93 – Transmission Fluid Temperature Sensor (00300–1333)
J34 – Seat Belt Warning System Relay
J217 – Transmission Control Module (TCM), below rear seat bench
J248 – Diesel Direct Fuel Injection (DFI) Engine Control Module (ECM)
K – Instrument Cluster
M10 – Right Brake Light
N88 – Solenoid Valve 1 (00258–1113)
N89 – Solenoid Valve 2 (00260–1121)
N90 – Solenoid Valve 3 (00262–1123)
N91 – Solenoid Valve 4 (00264–1131)
N92 – Solenoid Valve 5 (00266–1133)
N93 – Solenoid Valve 6 (00268–1141)
N94 – Solenoid Valve 7 (00270–1143)
T1y – Single Connector, on Data Link Connector (DLC) Wire Connector
T8a – 8-Pin Connector, behind fuse/relay panel
T10 – 10-Pin Connector
T28 – 28-Pin Connector, on instrument cluster
T68 – 68-Pin Connector, on Transmission Control Module (TCM)
T68a – 68-Pin Connector, on Diesel Direct Fuel Injection (DFI) Engine Control Module (ECM)
TV5 – Terminal 15a Wire Connector, above fuse/relay panel
TV14 – Data Link Connector (DLC) Wire Connector, behind console

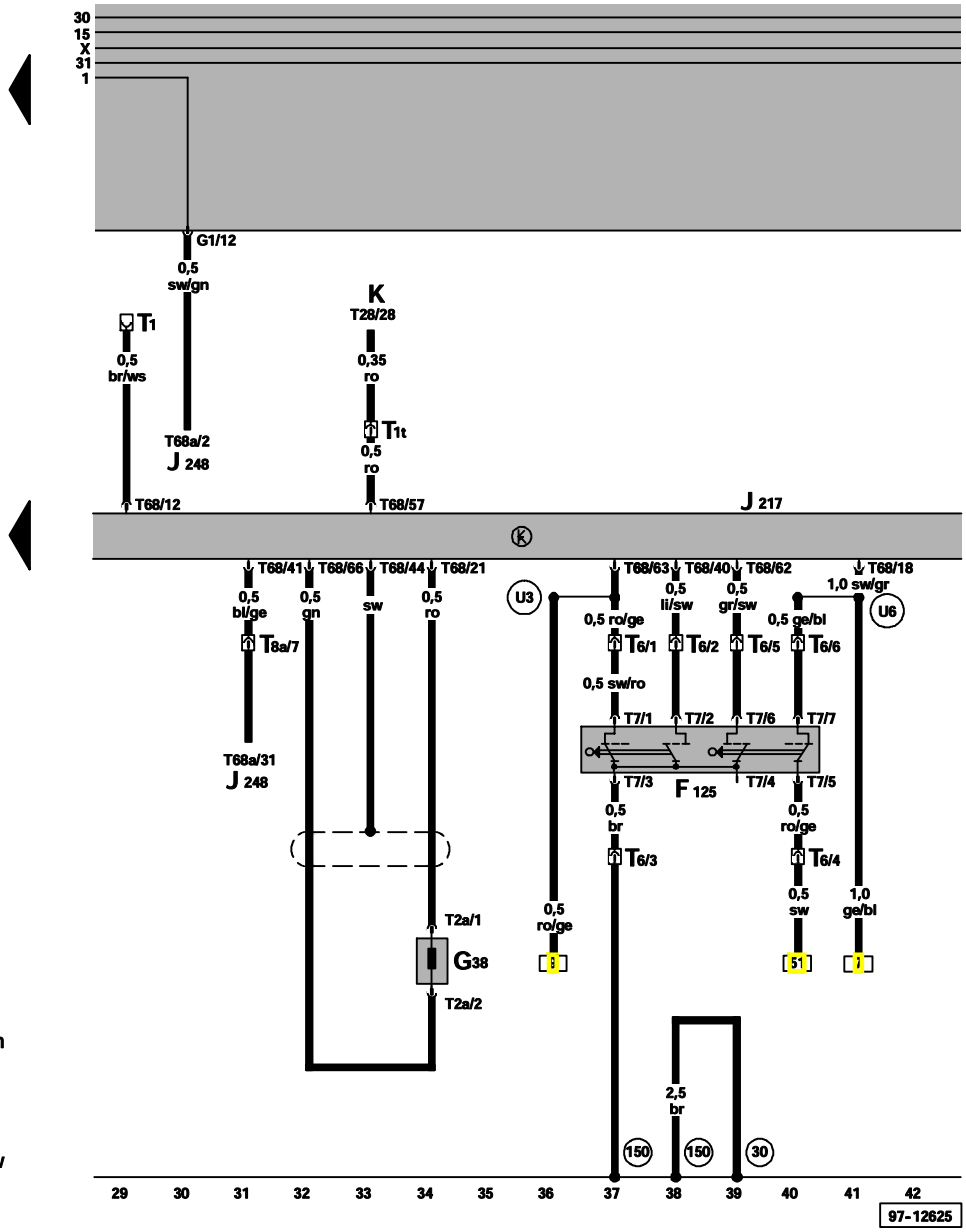

ws = white
sw = black
ro = red
br = brown
gn = green
bl = blue
gr = grey
li = violet
ge = yellow

F125 – Multi-Function Transmission Range (TR) Switch (00293–1314)
G38 – Transmission Vehicle Speed Sensor (VSS)
J217 – Transmission Control Module (TCM), below rear seat bench
J248 – Diesel Direct Fuel Injection (DFI) Engine Control Module (ECM)
K – Instrument Cluster
T1 – Single Connector, behind fuse/relay panel, A/C connection
T1t – Single Connector, behind fuse/relay panel, connection for Transmission Range (TR) Selector Lever Display
T2a – Double Connector, white
T6 – 6-Pin Connector, in engine compartment, left
T7 – 7-Pin Connector
T8a – 8-Pin Connector, behind fuse/relay panel
T28 – 28-Pin Connector, on instrument cluster
T68 – 68-Pin Connector, on Transmission Control Module (TCM)
T68a – 68-Pin Connector, on Diesel Direct Fuel Injection (DFI) Engine Control Module (ECM)
30 – Ground connection, –1–, beside fuse/relay panel
150 – Ground connection, in automatic transmission wiring harness
U3 – Wire connection, in automatic transmission wiring harness
U6 – Wire connection, in automatic transmission wiring harness

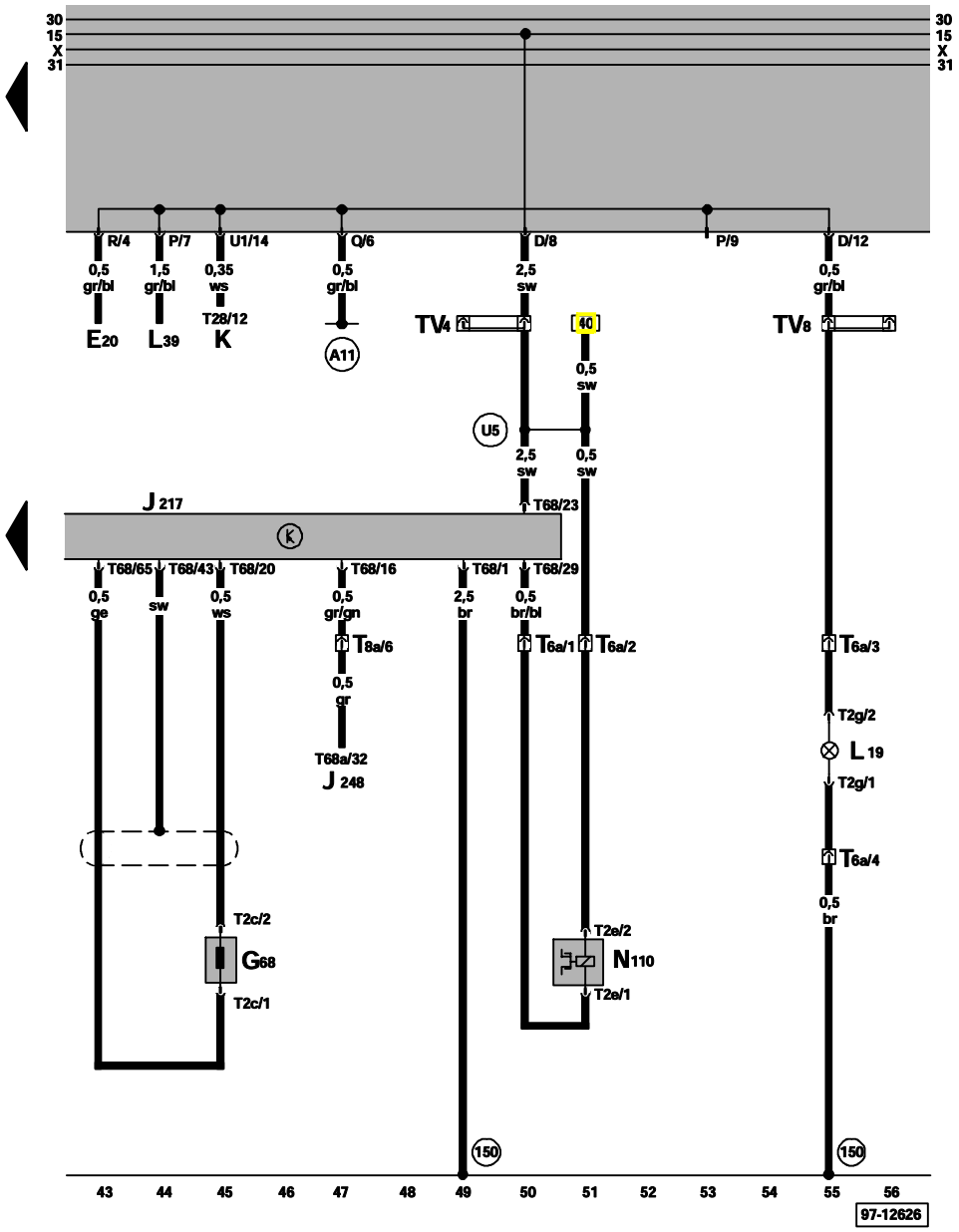

ws = white
sw = black
ro = red
br = brown
gn = green
bl = blue
gr = grey
li = violet
ge = yellow

E20 – Instrument Panel Light Dimmer Switch
G68 – Vehicle Speed Sensor (VSS) (00281–1231)
J217 – Transmission Control Module (TCM), below rear seat bench
J248 – Diesel Direct Fuel Injection (DFI) Engine Control Module (ECM)
K – Instrument Cluster
L19 – Automatic Transmission Console Light
L39 – Rear Window Defogger Switch Light
N110 – Shift Lock Solenoid (01236–4314)
T2c – Double Connector, black
T2e – Double Connector
T2g – Double Connector
T6a – 6-Pin Connector, near gearshift lever
T28 – 28-Pin Connector, on instrument cluster
T68 – 68-Pin Connector, on Transmission Control Module (TCM)
T68a – 68-Pin Connector, on Diesel Direct Fuel Injection (DFI) Engine Control Module (ECM)
TV4 – Terminal 15 Wire Connector, above fuse/relay panel
TV8 – Terminal 58b Wire Connector, above fuse/relay panel

150 – Ground connection, in automatic transmission wiring harness

A11 – Plus connection (58b) in instrument panel wiring harness

U5 – Wire connection –2– (15), in automatic transmission wiring harness

1.9 Engine ur o iesel Fuel n ection F , W, code 1 ,

from August 1995

Relay location
For relay location and multiple connectors see also section "component locations".

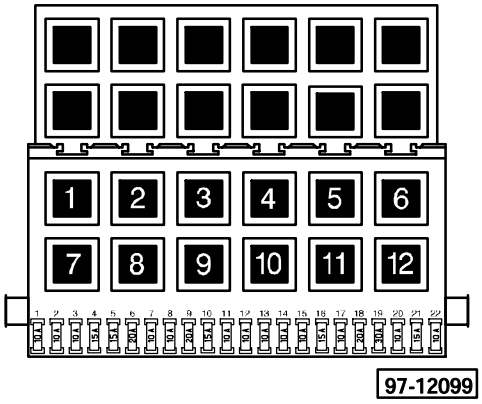

3 – Power Supply (Terminal 30, B+) Relay (109)

12 – Glow Plug Relay (104)

Note: Number in parentheses indicates production control number stamped on relay housing.

Fuse colors

30A – green
25A – white
20A – yellow
15A – blue
10A – red

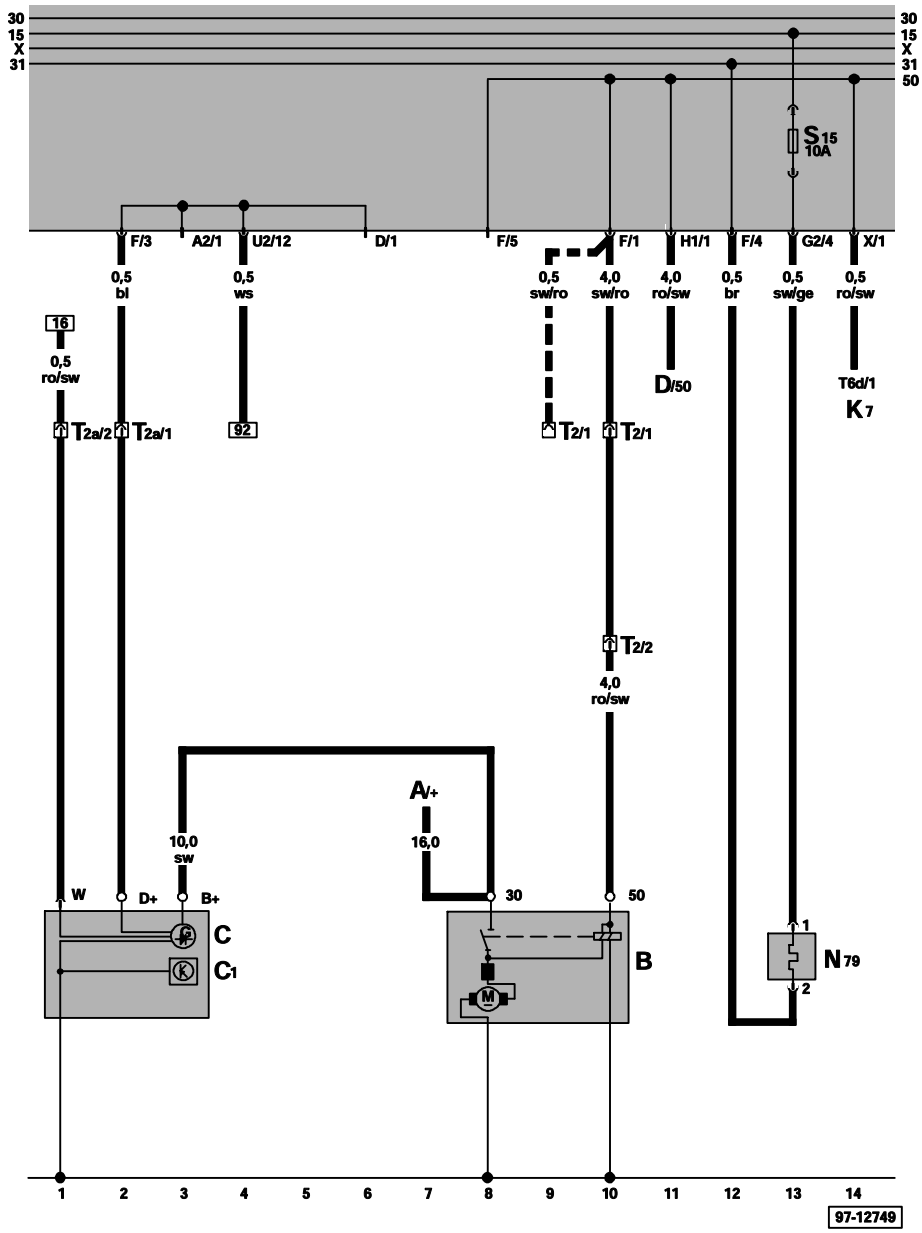

ws = white
sw = black
ro = red
br = brown
gn = green
bl = blue
gr = grey
li = violet
ge = yellow

A – Battery
B – Starter
C – Generator (GEN)
C1 – Voltage Regulator (VR)
D – Ignition/Starter Switch
K7 – Brake and Parking Brake Warning Light
N79 – Positive Crankcase Ventilation (PCV) Heating Element
T2 – Double Connector, behind fuse/relay panel
T2a – Double Connector, near starter
T6d – 6-Pin Connector

▬▬ – Automatic transmission only

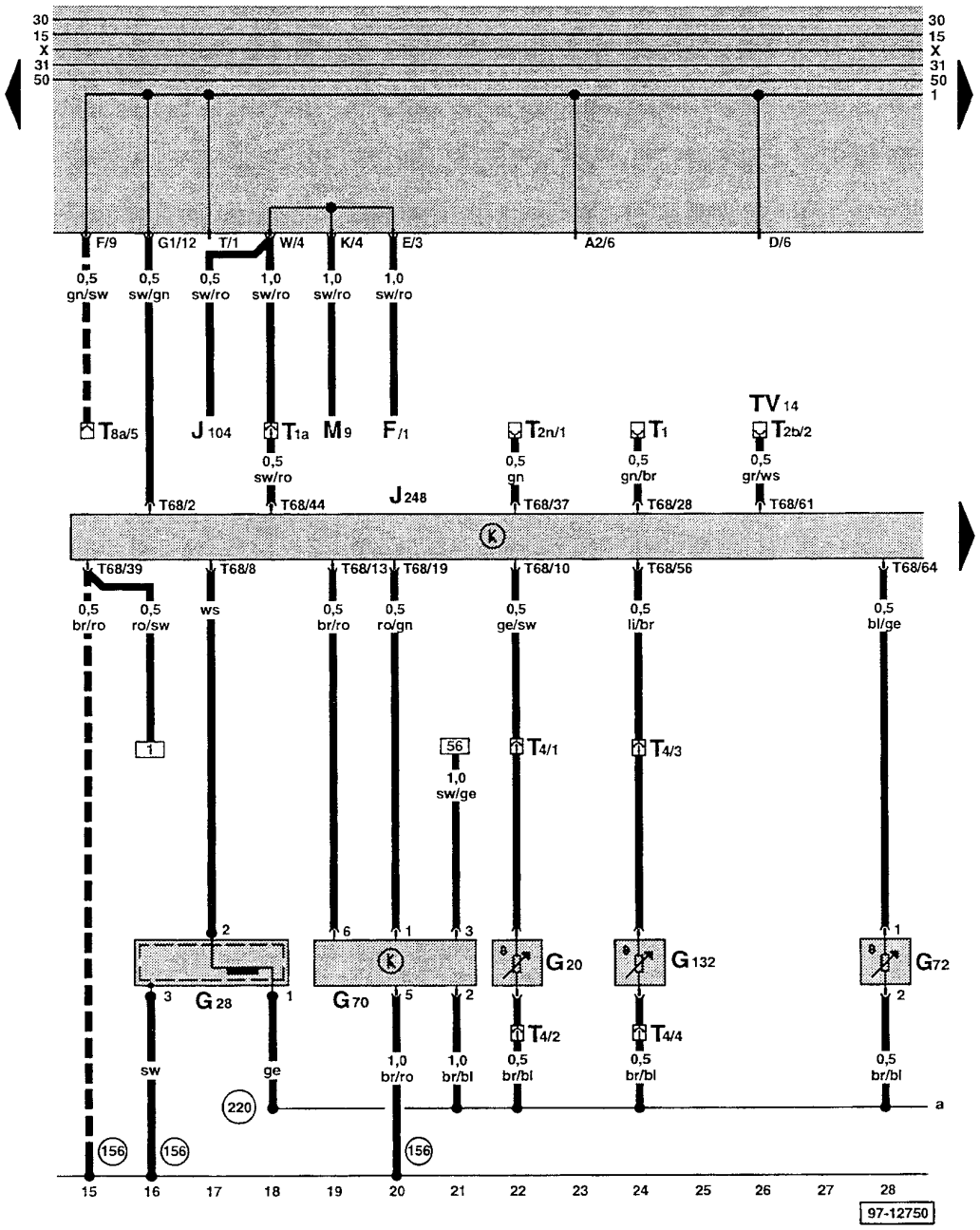

ws = white
sw = black
ro = red
br = brown
gn = green
bl = blue
gr = grey
li = violet
ge = yellow

F – Brake Light Switch (00526)
G20 – Tempeature sensor I for Catalyst
G28 – Engine Speed (RPM) Sensor (00513)
G70 – Mass Air Flow (MAF) Sensor (00553)
G72 – Intake Air Temperature (IAT) Sensor (00527)
J104 – ABS Control Module (w/EDL)
G132 – Temperature sensor II for Catalyst
J248 – Diesel Direct Fuel Injection (DFI) Engine Control Module (ECM)
M9 – Left Brake Light
T1 – Single Connector
T1a – Single Connector, behind fuse relay/panel
T2b – Double Connector, on Data Link Connector (DLC) Wire Connector, behind console
T2n – Double Connector, behind fuse relay/panel, A/C connection
T4 – 4-Pin Connector
T8a – 8-Pin Connector, behind fuse relay/panel
T68 – 68-Pin Connector
TV14 – Data Link Connector (DLC) wire Connector, behind console

(156) – Ground connection, in Diesel Direct Fuel Injection (DFI) wiring harness
(220) – Ground connection (sensor ground), in engine compartment wiring harness

– – – Automatic transmission only

Diesel direct fuel injection (DFI) engine control module (ECM), engine speed (RPM) sensor, mass air flow (MAF) sensor, intake air temperature (IAT) sensor

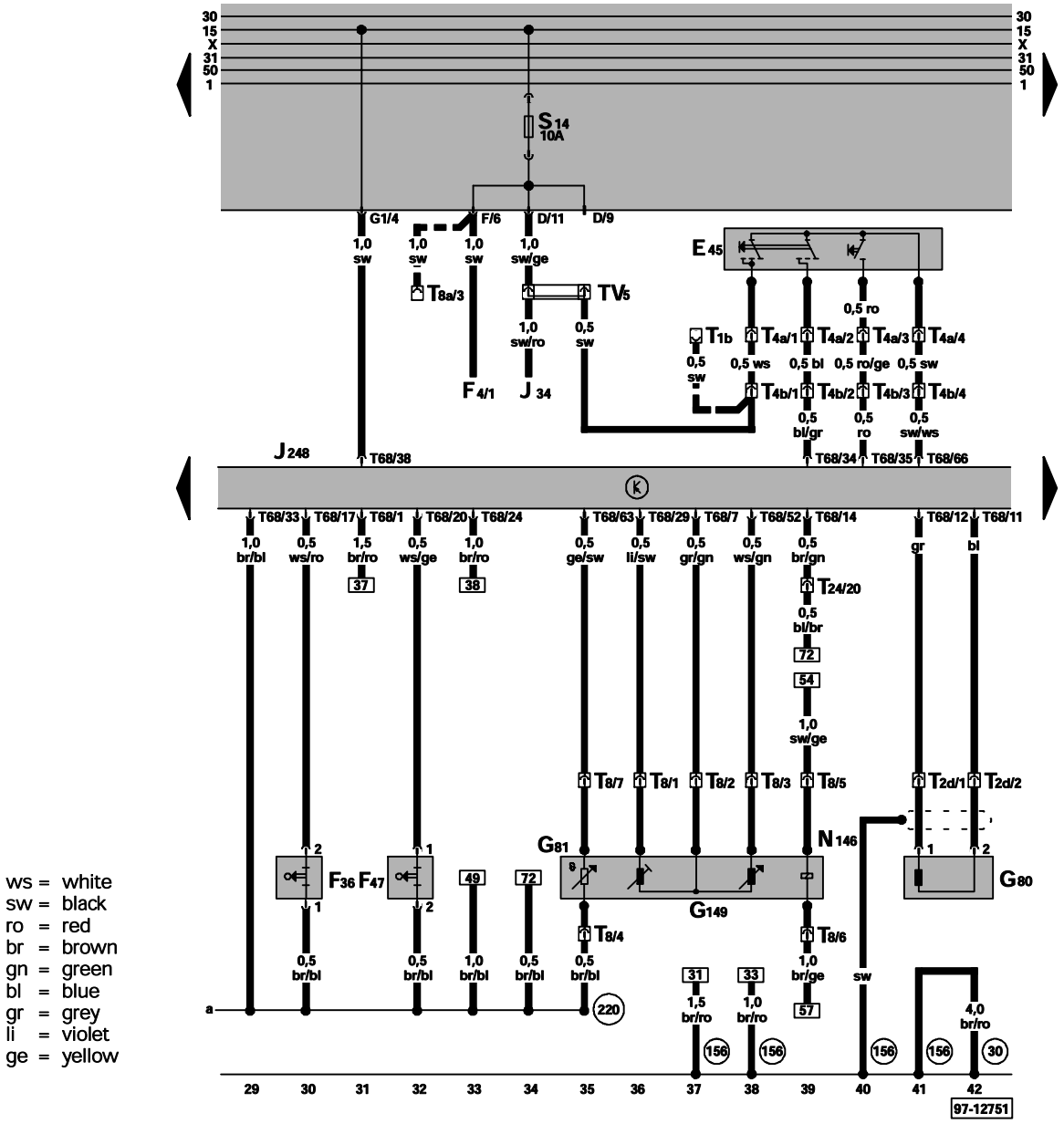

ws = white
sw = black
ro = red
br = brown
gn = green
bl = blue
gr = grey
li = violet
ge = yellow

E45 - Cruise Control Switch (00671), vehicles with cruise Control only
F4 - Back-Up Light Switch
F36 - Clutch Vacuum Vent Valve Switch (00650)
F47 - Brake Vacuum Vent Valve Switch for cruise control/diesel fuel injection (DFI) (00629)
G80 - Needle Lift Sensor (00542)
G81 - Fuel Temperature Sensor (00539)
G149 - Modulating Piston Displacement Sensor (00765)
J34 - Seat Belt Warning System Relay
J248 - Diesel Direct Fuel Injection (DFI) Engine Control Module (ECM), in plenum chamber, right
N146 - Quantity Adjuster (01268)
T1b - Single Connector, behind fuse/relay panel
T2d - Double Connector, on left cylinder head, near fuel injection pump
T4a - 4-Pin Connector, behind steering column switch cover
T4b - 4-Pin Connector, behind fuse/relay panel
T8 - 8-Pin Connector, on fuel injection pump
T8a - 8-Pin Connector, behind fuse/relay panel
T24 - 24-Pin Connector, on left cylinder head
T68 - 68-Pin Connector
TV5 - Terminal 15a Wire Connector, above fuse/relay panel

30 - Ground connection -1-, beside fuse/relay panel
156 - Ground connection, in Diesel Direct Fuel Injection (DFI) wiring harness
220 - Ground connection (sensor ground), in engine compartment wiring harness

▬ ▬ ▬ Automatic transmission only

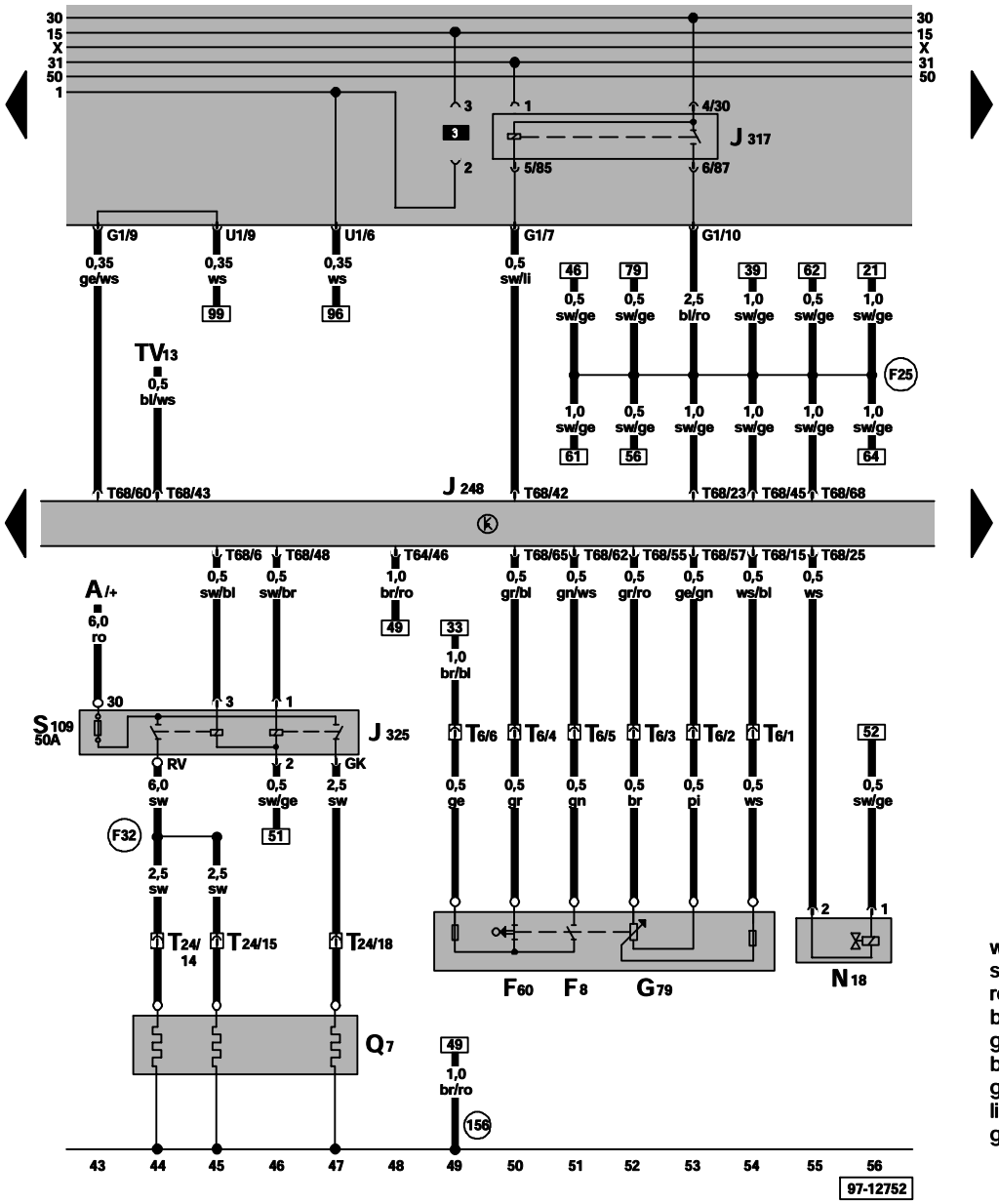

ws = white
sw = black
ro = red
br = brown
gn = green
bl = blue
gr = grey
li = violet
ge = yellow

A – Battery
F8 – Kick Down Switch, automatic transmission only
F60 – Closed Throttle Position (CTP) Switch (00516)
G79 – Throttle Position (TP) Sensor (00777)
J248 – Diesel Direct Fuel Injection (DFI) Engine Control Module (ECM), in plenum chamber, right
J317 – Power Supply (Terminal 30, B+) Relay (01054)
J325 – Coolant Glow Plug Relay (01160)
N18 – EGR Vacuum Regulator Solenoid Valve (01265)
Q7 – Spark Plugs (Coolant)
S109 – Fuse for Glow Plug (Coolant)

T6 – 6-Pin Connector, behind fuse/relay panel
T24 – 24-Pin Connector, on left cylinder head
T68 – 68-Pin Connector, on Diesel Direct Fuel Injection (DFI) Engine Control Module(ECM)
TV13 – Vehicle Speed Signal Wire Connector, above fuse/relay panel

(F25) – Wire connection –1–, in Diesel Direct Fuel Injection (DFI) system wiring harness

(F32) – Wire connection (coolant glow plug), in Diesel Direct Fuel Injection (DFI) system wiring harness

(156) – Ground connection, in Diesel Direct Fuel (DFI) wiring harness

iesel direct fuel in ection F engine control module EC , power supply terminal 30, relay, spar plugs coolant , t rottle position P sensor, E R acuum regulator solenoid al e

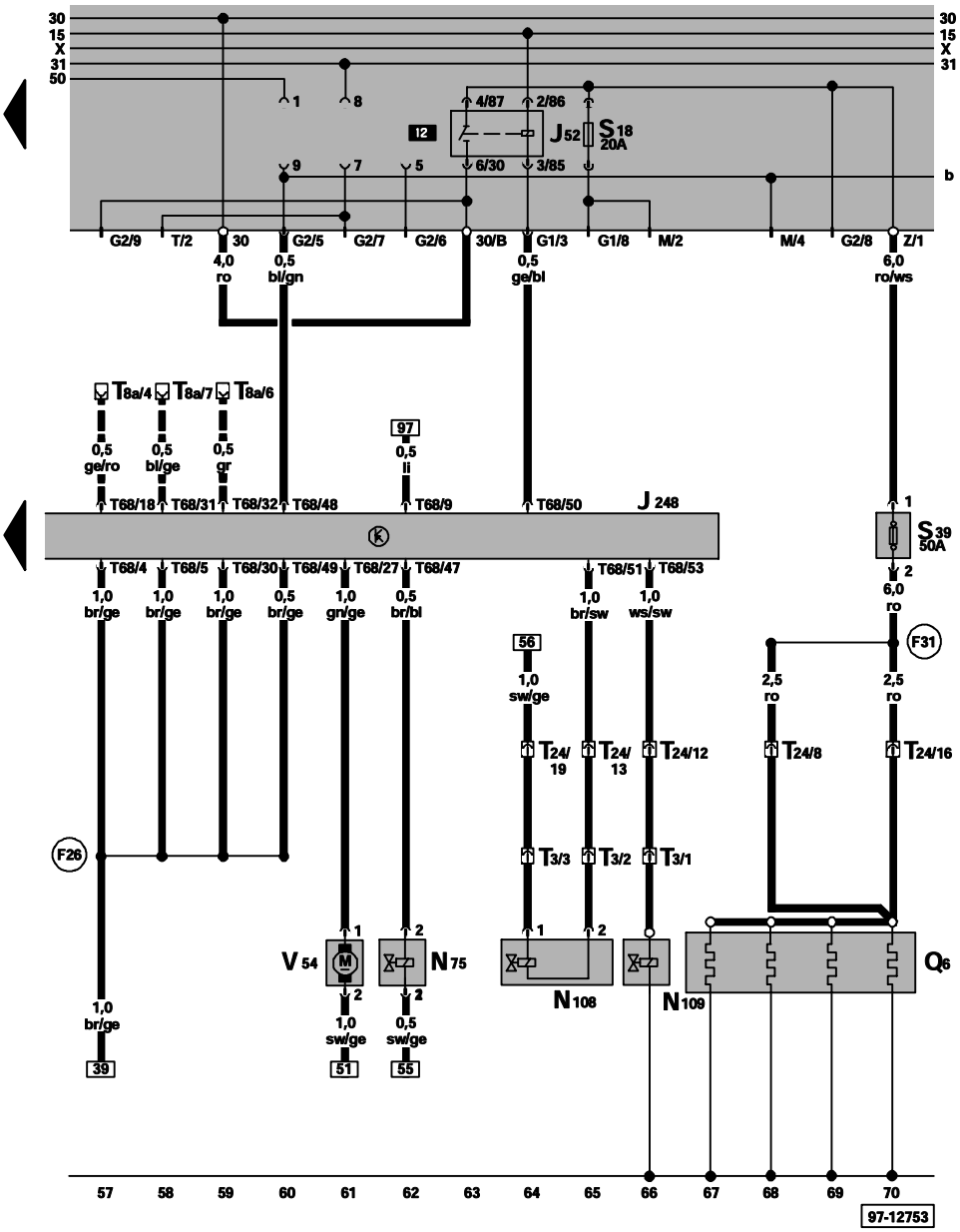

ws = white
sw = black
ro = red
br = brown
gn = green
bl = blue
gr = grey
li = violet
ge = yellow

J52 – Glow Plug Relay (01266)
J248 – Diesel Direct Fuel Injection (DFI) Engine Control Module (ECM), in plenum chamber, right
N75 – Wastegate Bypass Regulator Valve (01262)
N108 – Cold Start Injector (01269)
N109 – Fuel Cut-Off Valve (01237)
Q6 – Glow Plug (Engine)
S39 – Glow Plug 50A Fuse Strip, on firewall, left
T3 – 3-Pin Connector, near fuel injection pump
T8a – 8-Pin Connector, behind fuse/relay panel
T24 – 24-Pin Connector, on left cylinder head
T68 – 68-Pin Connector, on Diesel Direct Fuel Injection (DFI) Engine Control Module (ECM)
V54 – Metering Pump

(F26) – Wire connection –2–, in Diesel Direct Fuel Injection (DFI) system wiring harness

(F31) – Wire connection (engine glow plugs), in Diesel Direct Fuel Injection (DFI) system wiring harness

▬▬ – Automatic transmission only

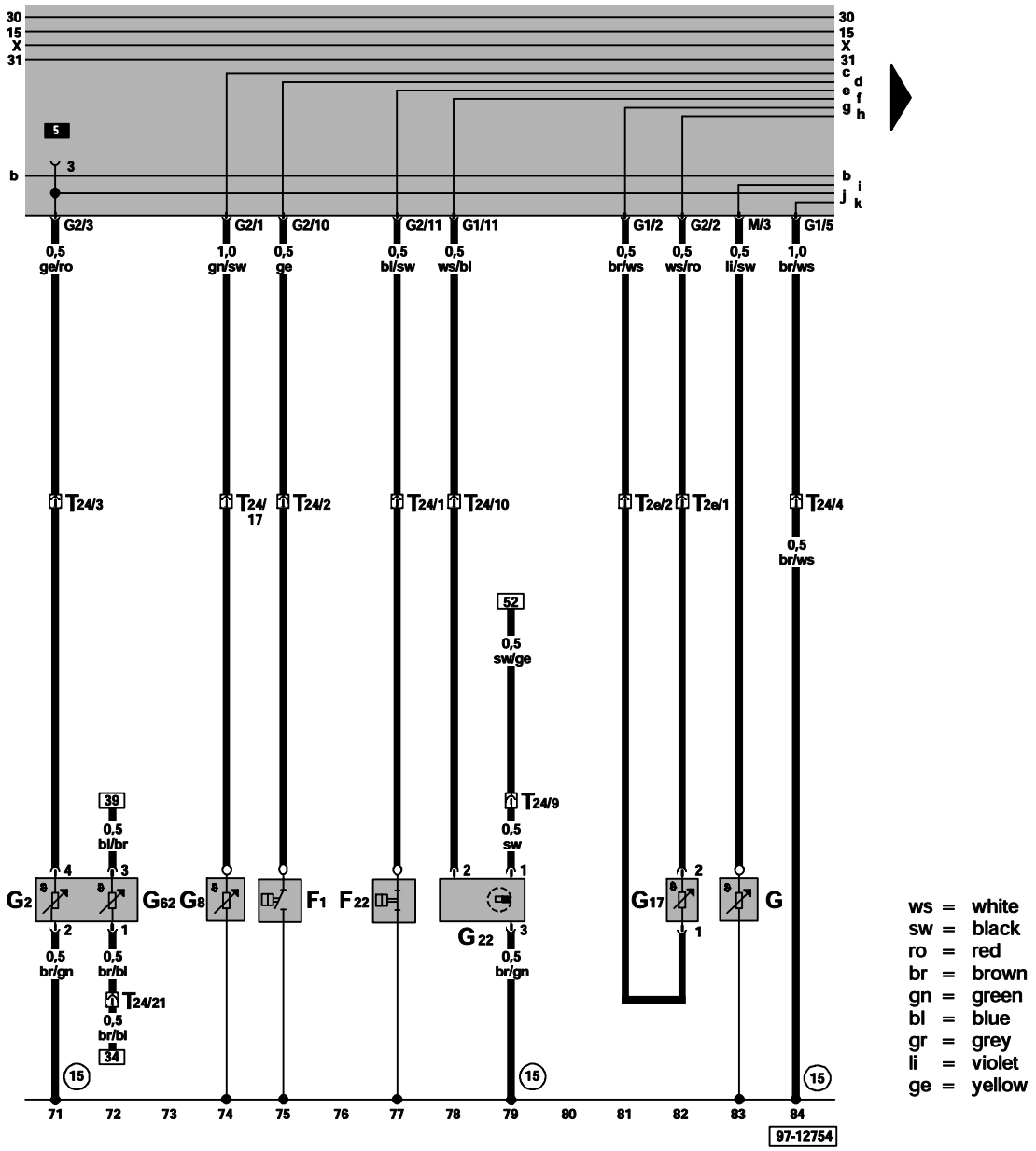

F1 – Oil Pressure Switch
F22 – 0.3 Bar Oil Pressure Switch
G – Fuel Level Sensor (00771)
G2 – Engine Coolant Temperature (ECT) Sensor (01039)
G8 – Oil Temperature Sensor (00534)
G17 – Outside Air Temperature Sensor (00779)
G22 – Speedodometer Vehicle Speed Sensor (VSS), (hall sensor, on transmission)
G62 – Engine Coolant Temperature (ECT) Sensor (00522)
T2e – Double Connector, in engine compartment, right front

T24 – 24-Pin Connector, on left cylinder head

(15) – Ground connection, on cylinder head

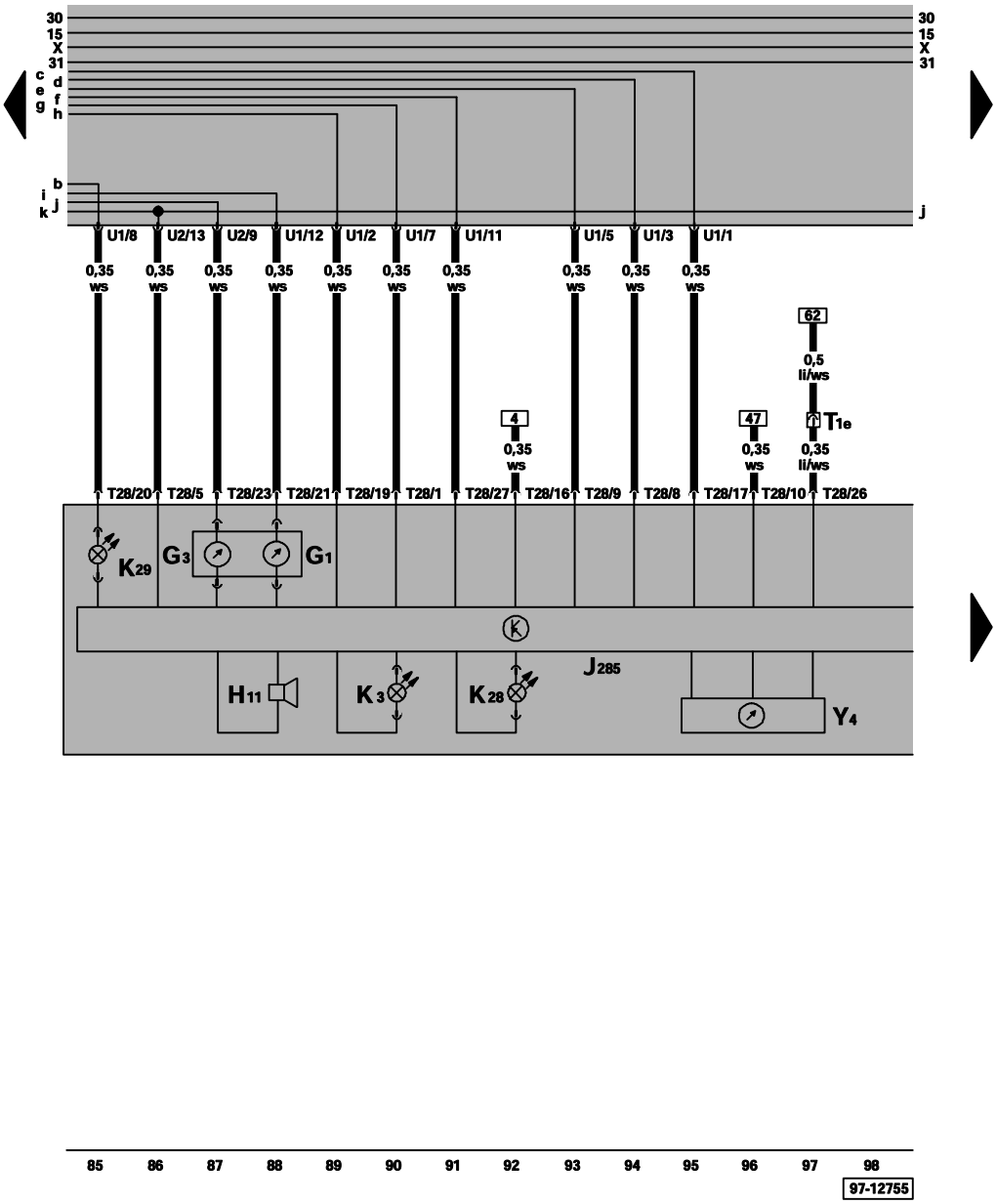

ws = white
sw = black
ro = red
br = brown
gn = green
bl = blue
gr = grey
li = violet
ge = yellow

G1 – Fuel Gauge (00664)
G3 – Engine Coolant Temperature (ECT) Gauge
H11 – Oil Pressure Warning Buzzer
J285 – Control Module With Display Unit In Instrument Cluster
K3 – Oil Pressure Warning Light (00755)
K28 – Engine Coolant Level/Temperature (ECL/ECT) Warning Light
K29 – Glow Plug Indicator Light (00626)
T1e – Single Connector, muti-function indicator signal
T28 – 28-Pin Connector, on instrument cluster
Y4 – Odometer Display

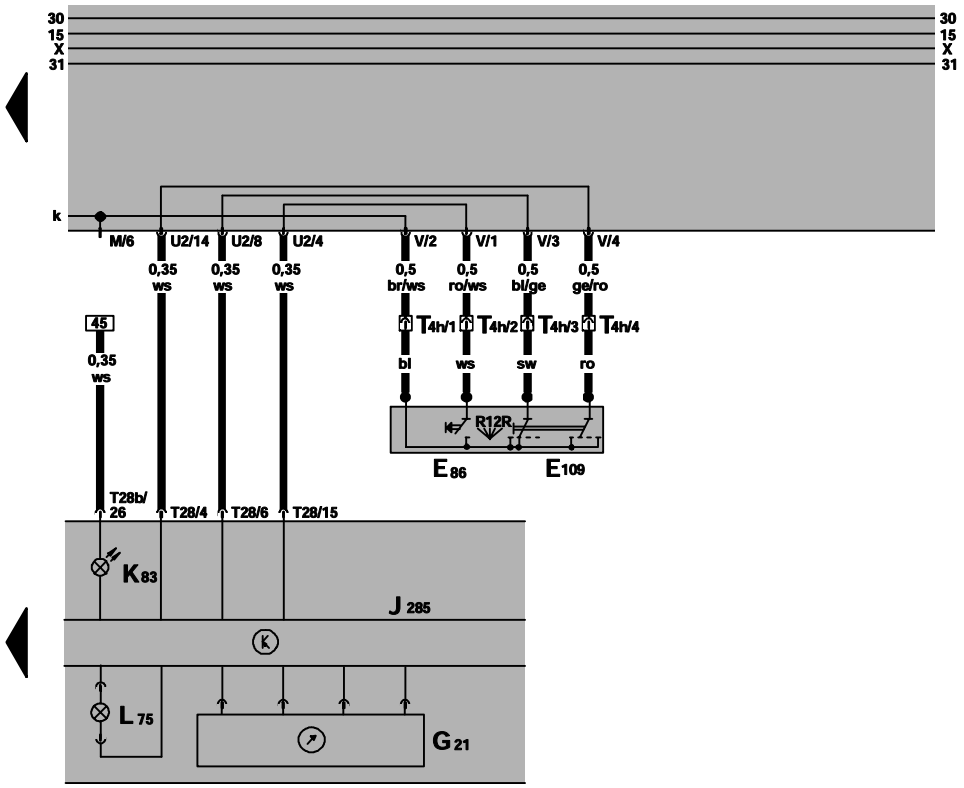

ws = white
sw = black
ro = red
br = brown
gn = green
bl = blue
gr = grey
li = violet
ge = yellow

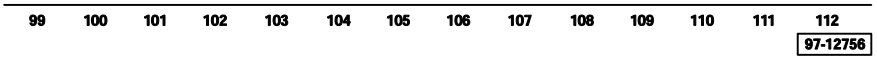

E86 – Multi-Function Indicator Mode Select Switch
E109 – Multi-Function Indicator Memory Switch
G21 – Speedometer (00663)
J285 – Control Module With Display Unit In Instrument Cluster
K83 – Malfunction Indicator Lamp (MIL)
L75 – Digital Display Light
T4h – 4-Pin Connector, behind steering column switch cover
T28 – 28-Pin Connector, on instrument cluster

2.0 Engine otronic utiport Fuel n ection F /85 W, code A A,

from August 1995

Relay location
For relay location and multiple connectors see also section "component locations".

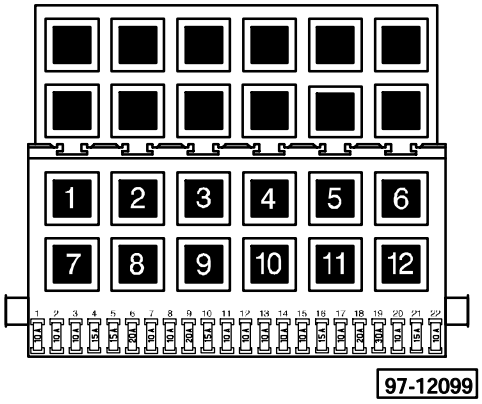

3 – Motronic Engine Control Module (ECM) Power Supply Relay (109)

12 – Fuel Pump (FP) Relay (167)

Note: Number in parentheses indicates production control number stamped on relay housing.

Fuse colors

30A – green
25A – white
20A – yellow
15A – blue
10A – red

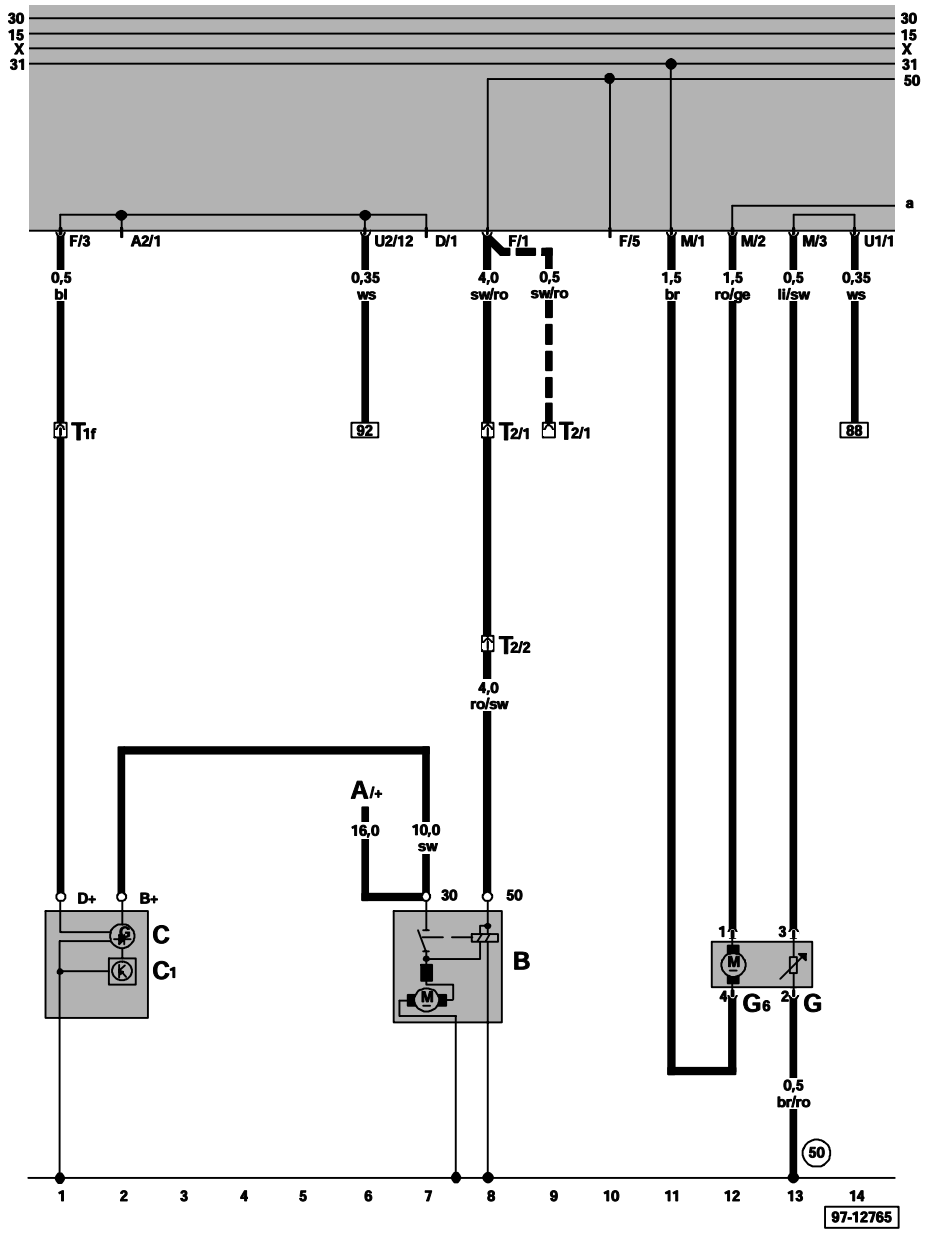

ws = white
sw = black
ro = red
br = brown
gn = green
bl = blue
gr = grey
li = violet
ge = yellow

A – Battery
B – Starter
C – Generator (GEN)
C1 – Voltage Regulator (VR)
G – Fuel Level Sensor
G6 – Fuel Pump (FP)
T1f – Single Connector, near starter
T2 – Double Connector, behind fuse/relay panel

(50) – Ground connection, in luggage compartment, left

▬▬ – Automatic transmission only

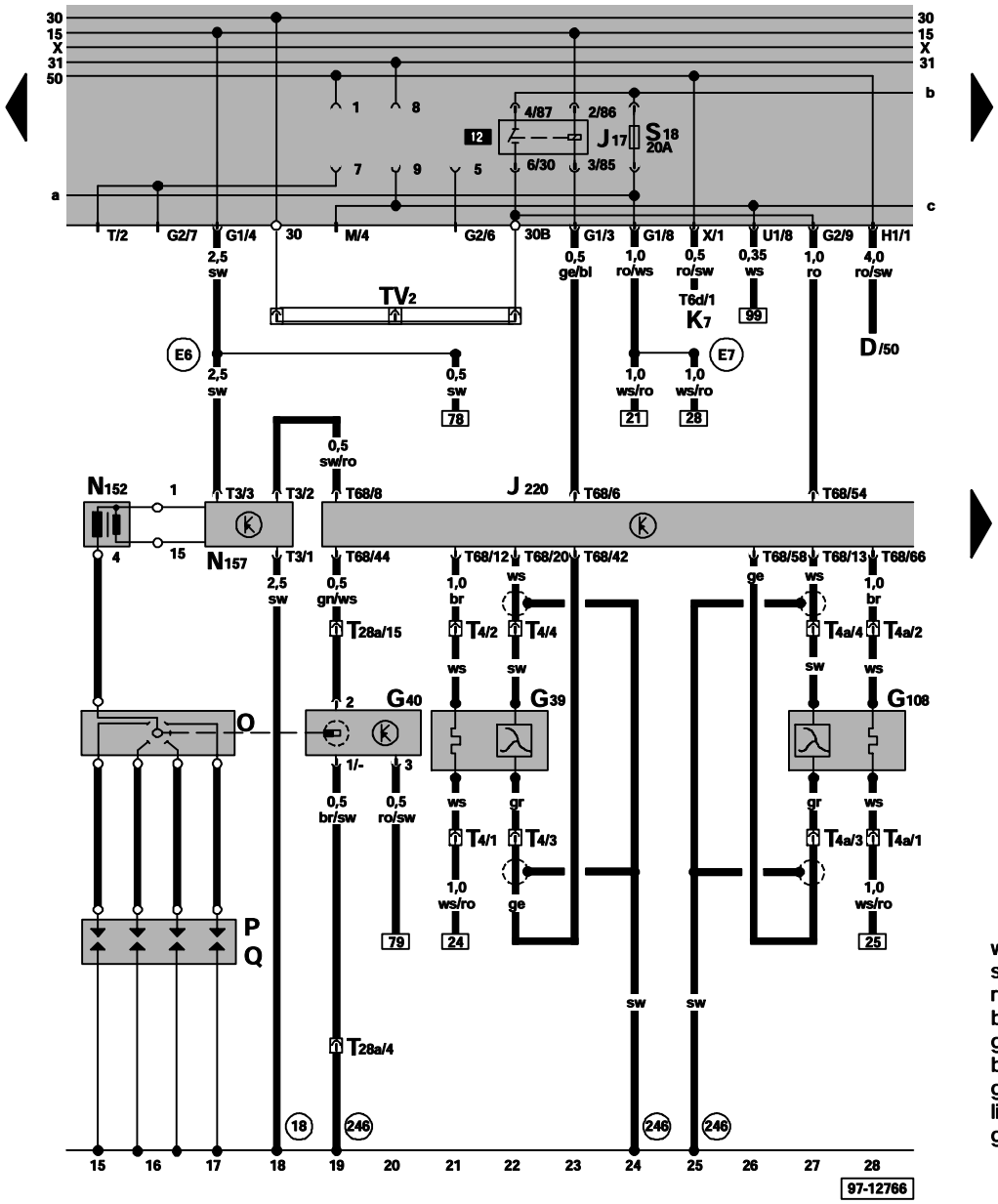

ws = white
sw = black
ro = red
br = brown
gn = green
bl = blue
gr = grey
li = violet
ge = yellow

D – Ignition/Starter Switch
G39 – Heated Oxygen Sensor (HO2S) (00525)
G40 – Camshaft Position (CMP) Sensor (00515)
G108 – Heated Oxygen Sensor (HO2S) 2 (00555)
J17 – Fuel Pump (FP) Relay (01259)
J220 – Motronic Engine Control Module (ECM), in plenum chamber, right
K7 – Brake and Parking Brake Warning Light
N152 – Ignition Coil
N157 – Ignition Coil Power Output Stage
O – Ignition Distributor
P – Spark Plug Connectors
Q – Spark Plugs
T3 – 3-Pin Connector
T4 – 4-Pin Connector
T4a – 4-Pin Connector
T6d – 6-Pin Connector
T28a – 28-Pin Connector, on left cylinder head
T68 – 68-Pin Connector
TV2 – Terminal 30 (B+) Wire Connector, above fuse/relay panel

(18) – Ground connection, on engine block

(246) – Ground connection (control module), in engine wiring harness

(E6) – Plus connection –1– (15), in Motronic Multiport Fuel Injection (MFI) wiring harness

(E7) – Plus connection (87a), in Motronic Multiport Fuel Injection (MFI) wiring harness

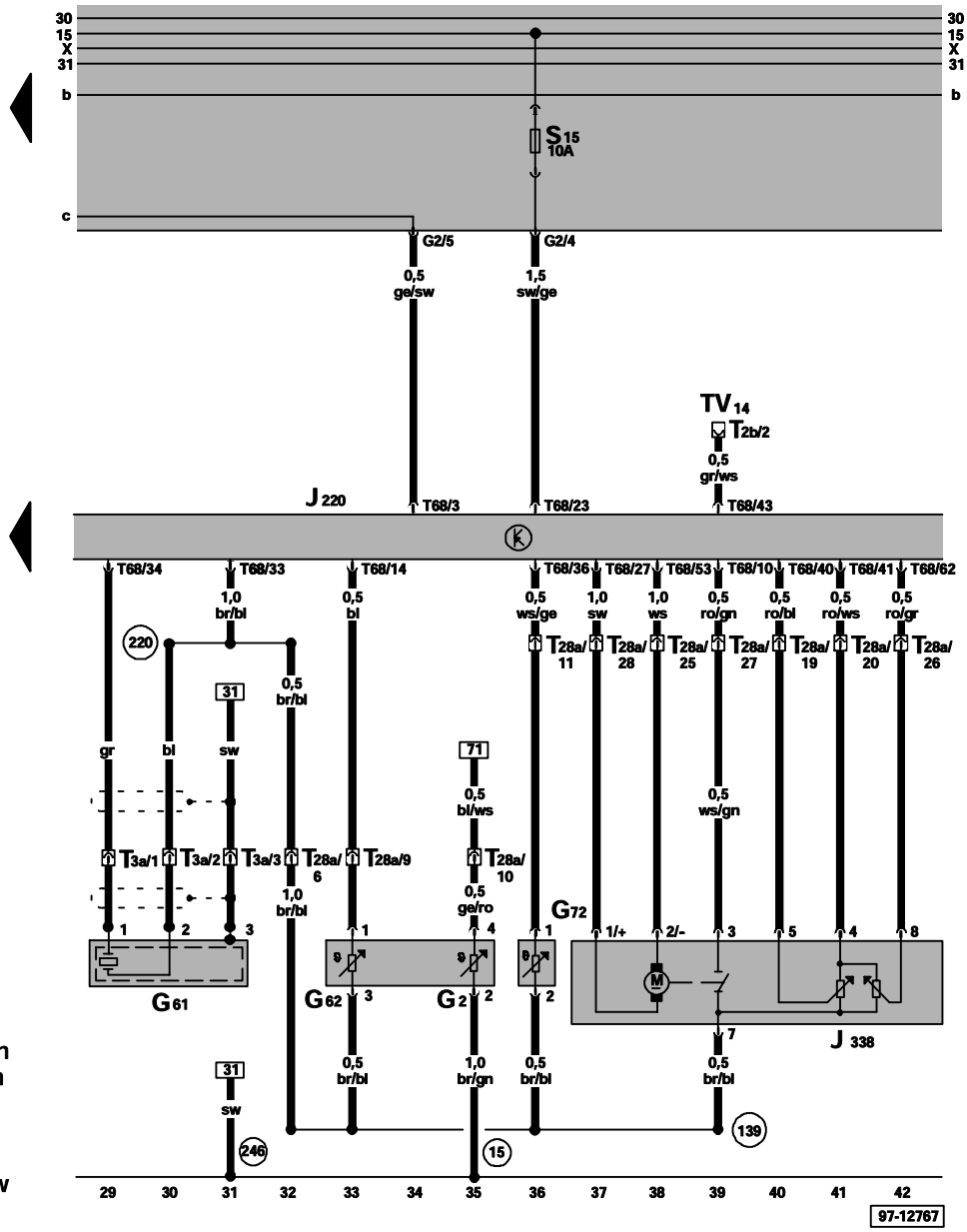

ws = white
sw = black
ro = red
br = brown
gn = green
bl = blue
gr = grey
li = violet
ge = yellow

- G2 – Engine Coolant Temperature (ECT) Sensor (01039)
- G61 – Knock Sensor (KS)
- G62 – Engine Coolant Temperature (ECT) Sensor (00522)
- G72 – Intake Air Temperature (IAT) Sensor (00527)
- J220 – Motronic Engine Control Module (ECM), in plenum chamber, right
- J338 – Throttle Valve Control Module (01165)
- T2b – Double Connector, on Data Link Connector (DLC) Wire Connector, behind console
- T3a – 3-Pin Connector, near starter
- T28a – 28-Pin Connector, on left cylinder head
- T68 – 68-Pin Connector, on Motronic Engine Control Module (ECM)
- TV14 – Data Link Connector (DLC) Wire Connector, behind console
- (15) – Ground connection, on cylinder head
- (139) – Ground connection (sensor ground), in Motronic Multiport Fuel Injection (MFI) wiring harness
- (220) – Ground connection (sensor ground), in engine wiring harness
- (246) – Ground connection (control module), in engine wiring harness

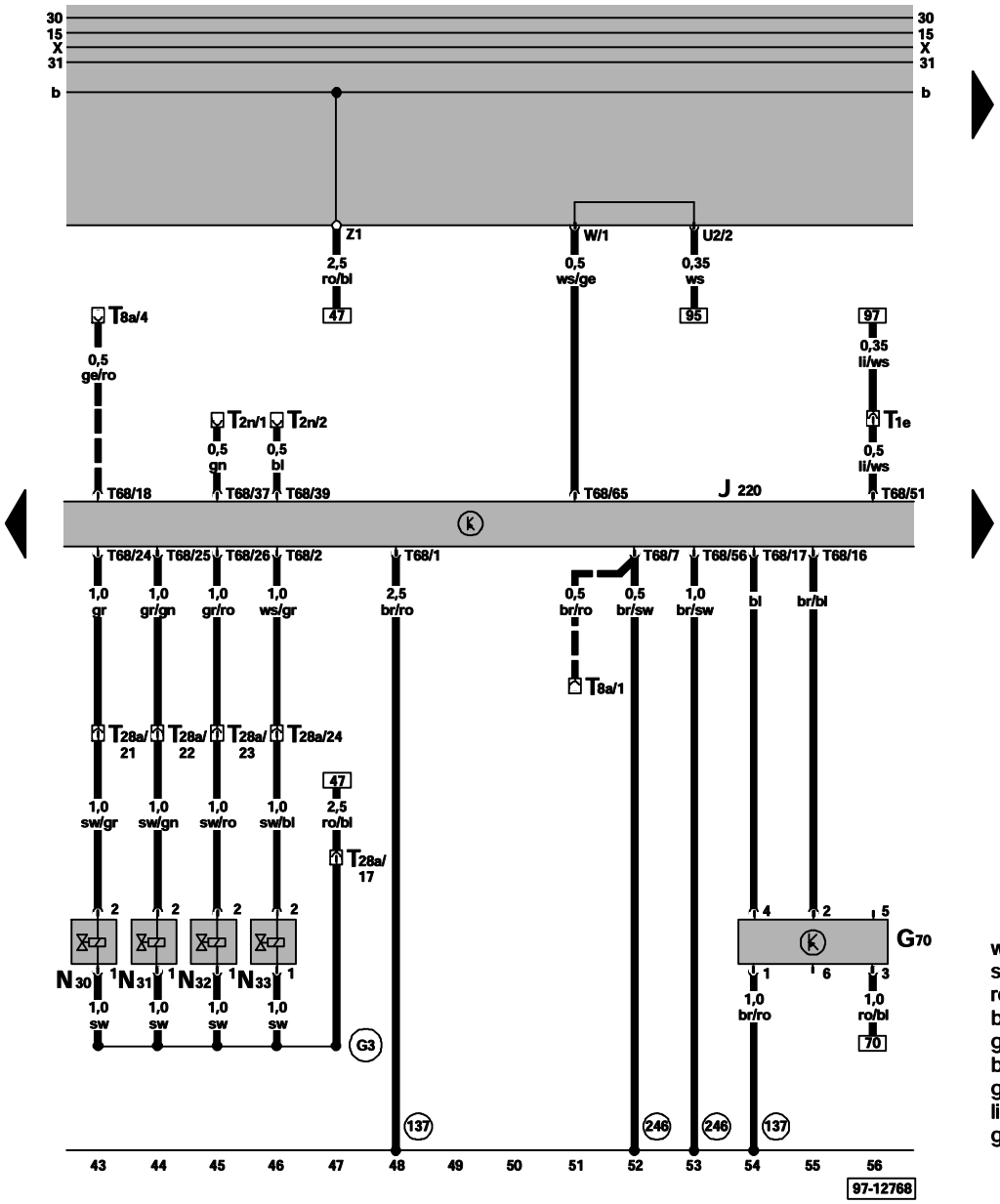

ws = white
sw = black
ro = red
br = brown
gn = green
bl = blue
gr = grey
li = violet
ge = yellow

- G70 – Mass Air Flow (MAF) Sensor (00553)
- J220 – Motronic Engine Control Module (ECM), in plenum chamber, right
- N30 – Cylinder 1 Fuel Injector (01249)
- N31 – Cylinder 2 Fuel Injector (01250)
- N32 – Cylinder 3 Fuel Injector (01251)
- N33 – Cylinder 4 Fuel Injector (01252)
- T1e – Single Connector, multi-function indicator signal
- T2n – Double Connector, behind fuse/relay panel, A/C connection
- T8a – 8-Pin Connector, behind fuse/relay panel
- T28a – 28-Pin Connector, on left cylinder head
- T68 – 68-Pin Connector, on Motronic Engine Control Module (ECM)

(137) – Ground connection (end stage), in Motronic Multiport Fuel Injection (MFI) wiring harness

(246) – Ground connection (control module), in engine wiring harness

(G3) – Plus connection, in injectors wiring harness

▬▬ – Automatic transmission only

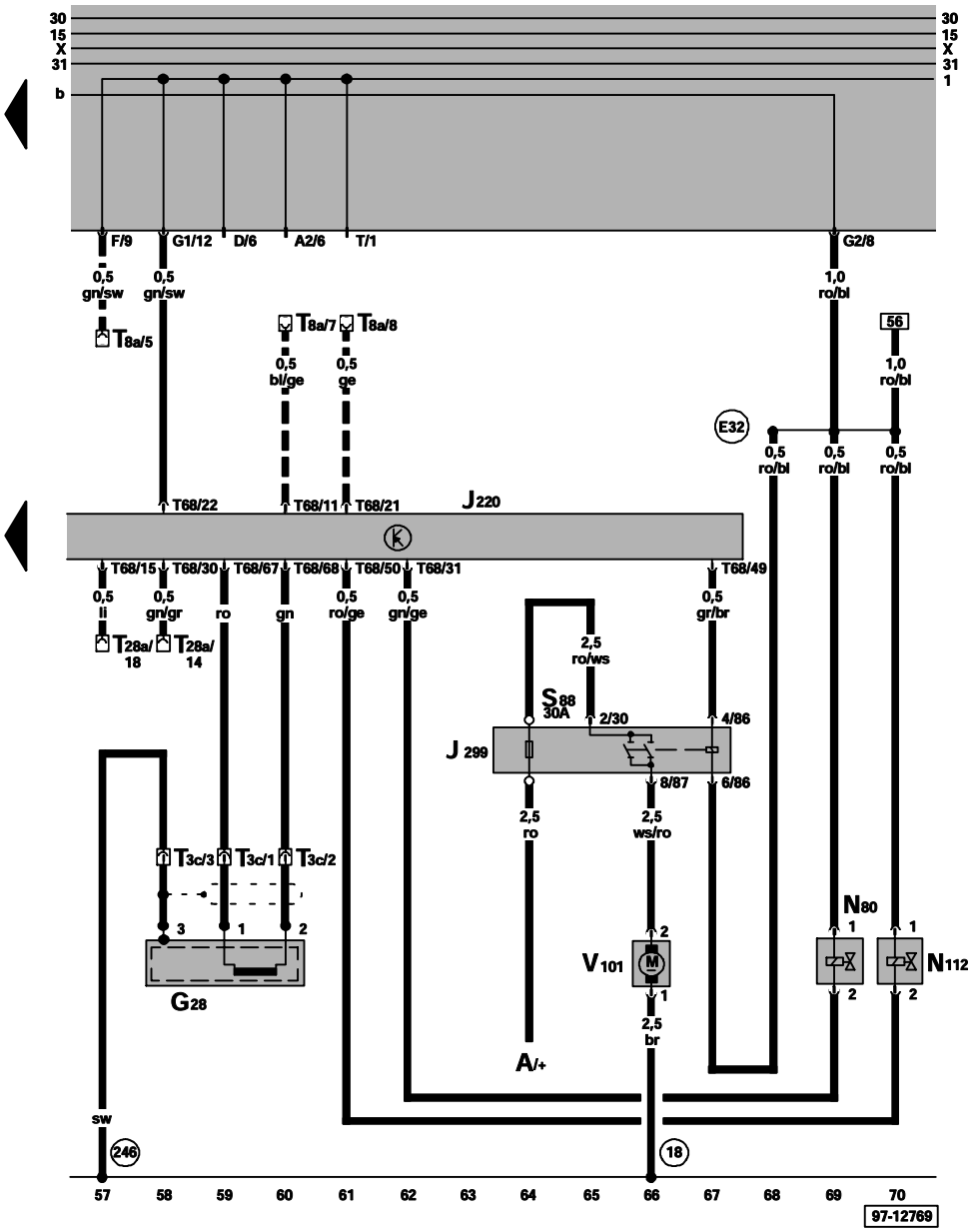

ws = white
sw = black
ro = red
br = brown
gn = green
bl = blue
gr = grey
li = violet
ge = yellow

A – Battery
G28 – Engine Speed (RPM) Sensor (00513)
J220 – Motronic Engine Control Module (ECM), in plenum chamber, right
J299 – Secondary Air Injection (AIR) Pump Relay (01264)
N80 – Evaporative Emission (EVAP) Canister Purge Regulator Valve
N112 – Secondary Air Injection (AIR) Solenoid Valve Purge Regulator Valve (01247)
S88 – Fuse Strip for Secondary Air Injection (AIR)
T3c – 3-Pin Connector, near starter
T8a – 8-Pin Connector, behind fuse/relay panel
T28a – 28-Pin Connector, on left cylinder head
T68 – 68-Pin Connector,on Motronic Engine Control Module (ECM)
V101 – Secondary Air Injection (AIR) Pump Motor

18 – Ground connection, on engine block

246 – Ground connectio (control module), in engine wiring harness

E32 – Connector (87), in Motronic Multiport Fuel Injection (MFI) wiring harness

▬▬ – Automatic transmission only

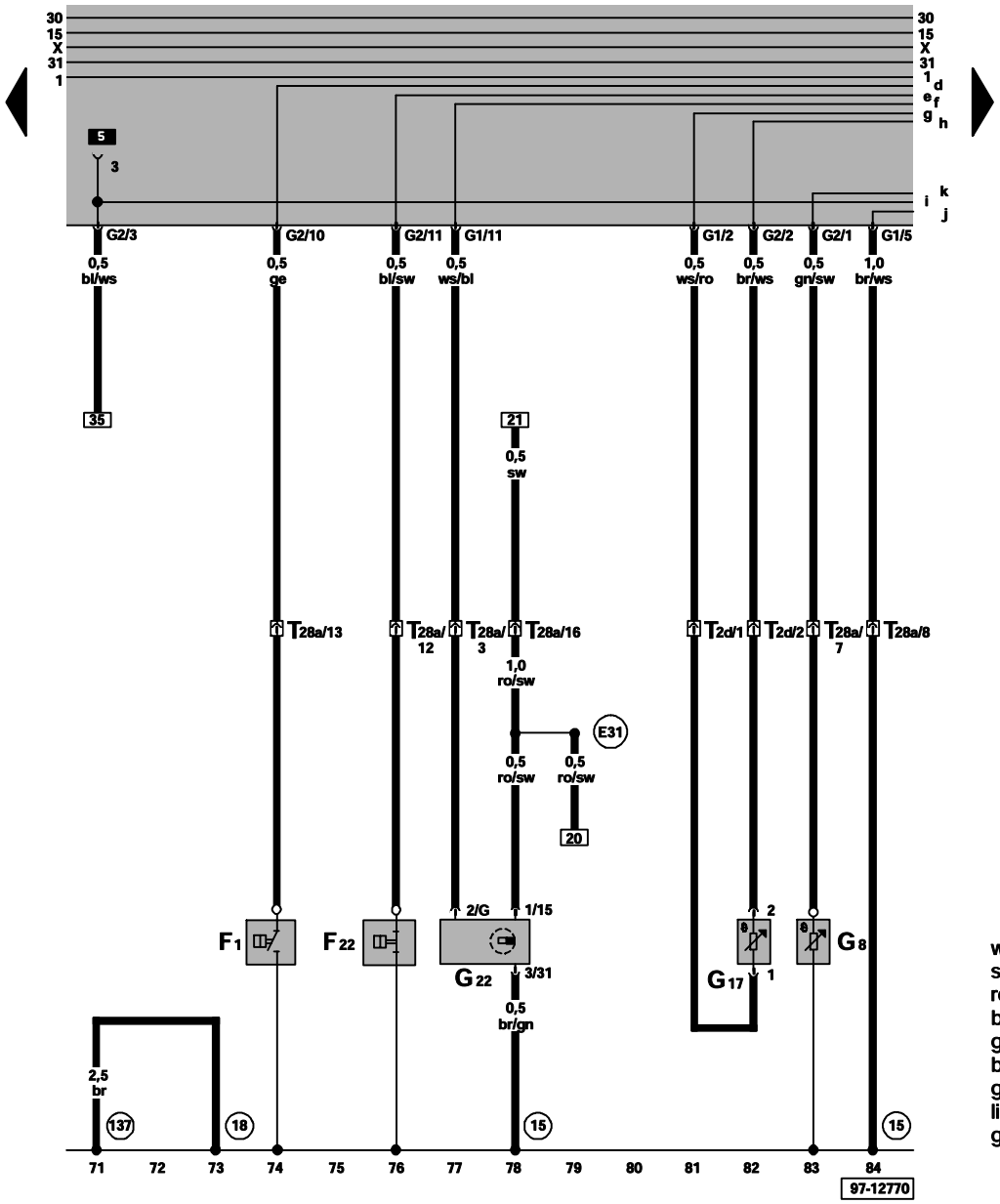

ws = white
sw = black
ro = red
br = brown
gn = green
bl = blue
gr = grey
li = violet
ge = yellow

F1 – Oil Pressure Switch
F22 – 0.3 Bar Oil Pressure Switch
G8 – Oil Temperature Sensor
G17 – Outside Air Temperature Sensor
G22 – Speedometer Vehicle Speed Sensor (VSS) (01086), (hall sensor, on transmission)
T2d – Double Connector, in engine comparment, right front
T28a – 28-Pin Connector, on left cylinder head

(15) – Ground connection, on cylinder head

(137) – Ground connection (end stage), in Motronic Multiport Fuel Injection (MFI) wiring harness

(E31) – Connector (15), in wiring harness engine

peedometer e icle speed sensor , outside air temperature sensor, oil temperatur sensor, oil pressure switc

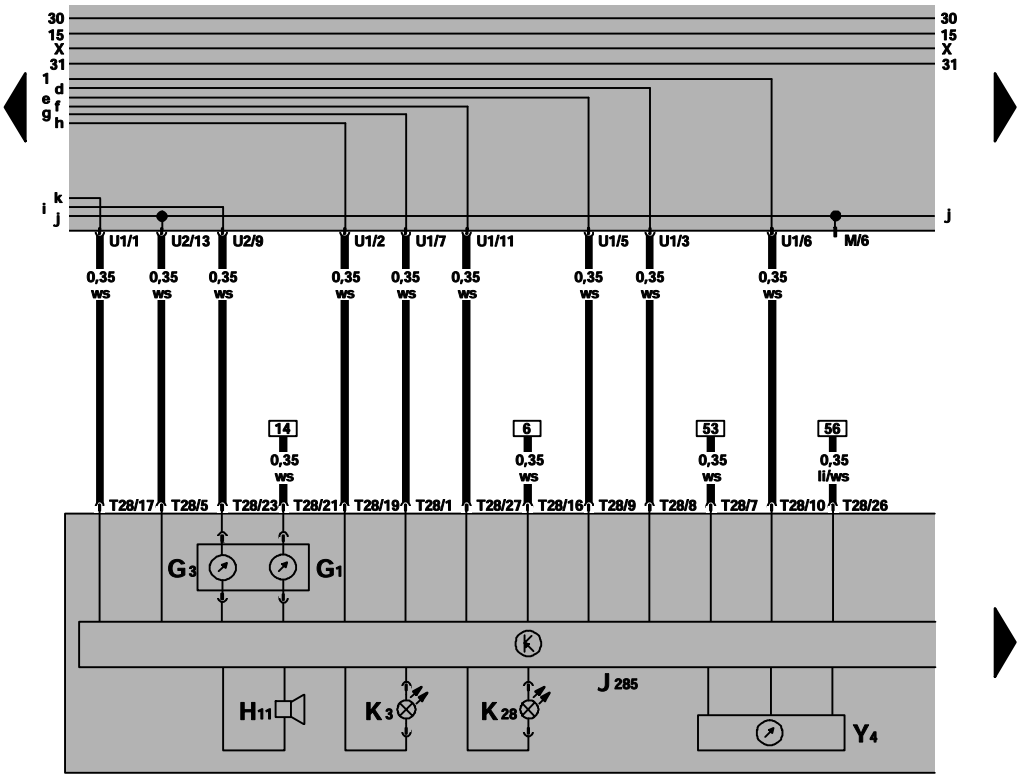

ws = white
sw = black
ro = red
br = brown
gn = green
bl = blue
gr = grey
li = violet
ge = yellow

85 86 87 88 89 90 91 92 93 94 95 96 97 98

97-12771

G1 – Fuel Gauge (00664)
G3 – Engine Coolant Temperature (ECT) Gauge
H11 – Oil Pressure Warning Buzzer
J285 – Control Module With Display Unit In Instrument Cluster
K3 – Oil Pressure Warning Light (00755)
K28 – Engine Coolant Level/Temperature (ECL/ECT) Warning Light
T28 – 28-Pin Connector, on instrument cluster
Y4 – Odometer Display

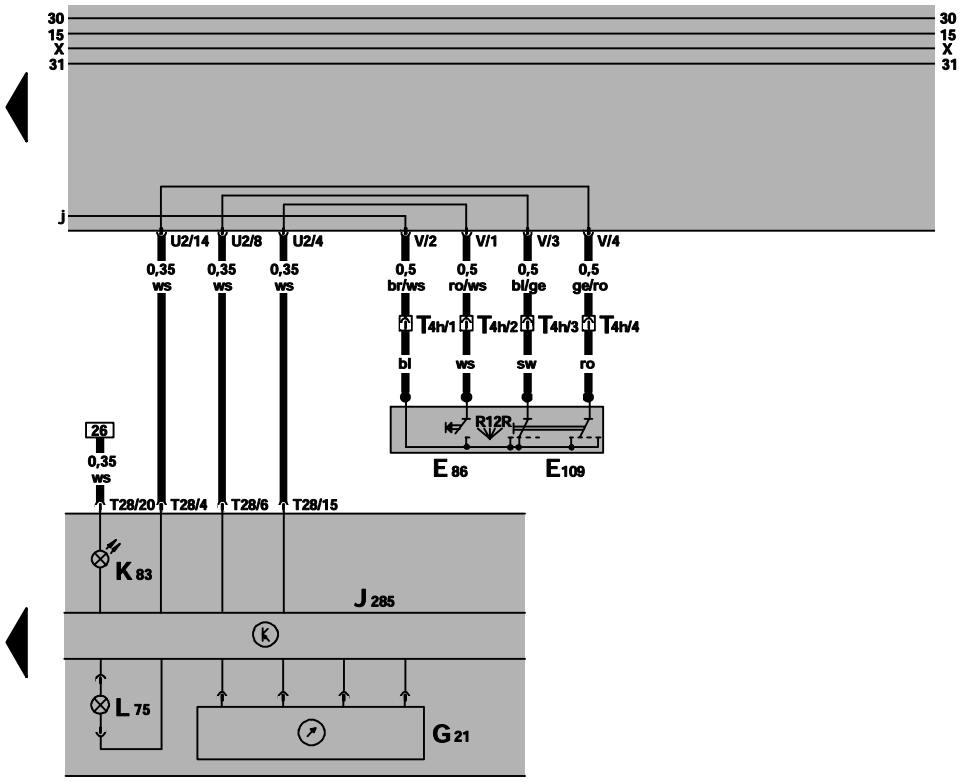

ws = white
sw = black
ro = red
br = brown
gn = green
bl = blue
gr = grey
li = violet
ge = yellow

99 100 101 102 103 104 105 106 107 108 109 110 111 112

97-12772

E86 – Multi-Function Indicator Mode Select Switch
E109 – Multi-Function Indicator Memory Switch
G21 – Speedometer (00663)
J285 – Control Module With Display Unit In Instrument Cluster
K83 – Malfunction Indicator Lamp (MIL)
L75 – Digital Display Light
T4h – 4-Pin Connector, behind steering column switch cover
T28 – 28-Pin Connector, on instrument cluster

2.8 Engine otronic utiport Fuel n ection F /128 W, code AAA,

from August 1995

Relay location
For relay location and multiple connectors see also section "component locations".

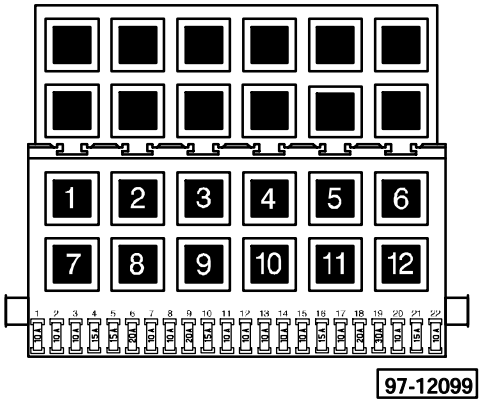

3 – Motronic Engine Control Module (ECM) Power Supply Relay (109)

12 – Fuel Pump (FP) Relay (167)

Note: Number in parentheses indicates production control number stamped on relay housing.

Fuse colors

30A – green
25A – white
20A – yellow
15A – blue
10A – red

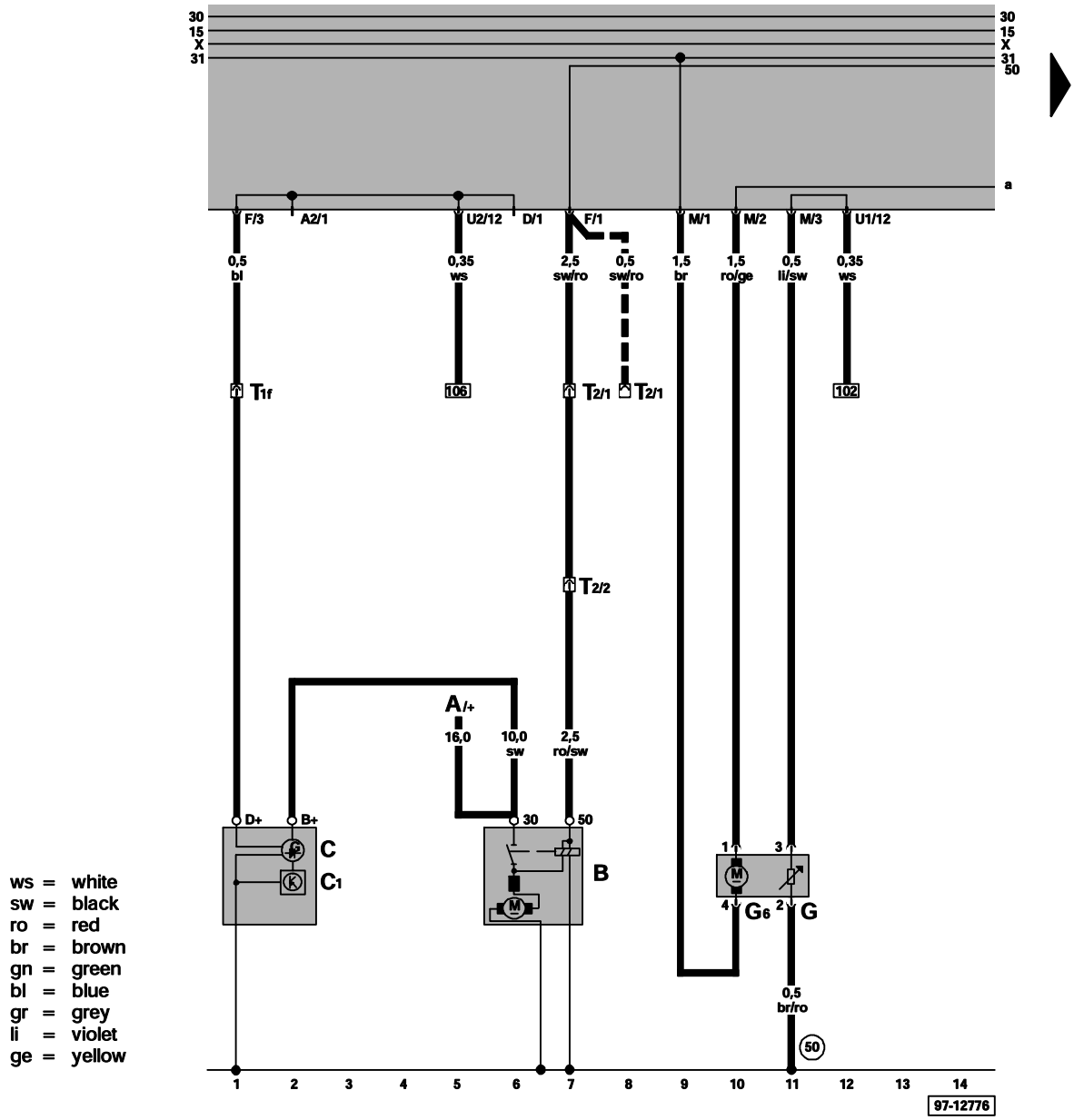

ws = white
sw = black
ro = red
br = brown
gn = green
bl = blue
gr = grey
li = violet
ge = yellow

A – Battery
B – Starter
C – Generator (GEN)
C1 – Voltage Regulator (VR)
G – Fuel Level Sensor
G6 – Fuel Pump (FP)
T1f – Single Connector, near starter
T2 – Double Connector, behind fuse/relay panel

(50) – Ground connection, in luggage compartment, left

▬▬ – Automatic transmission only

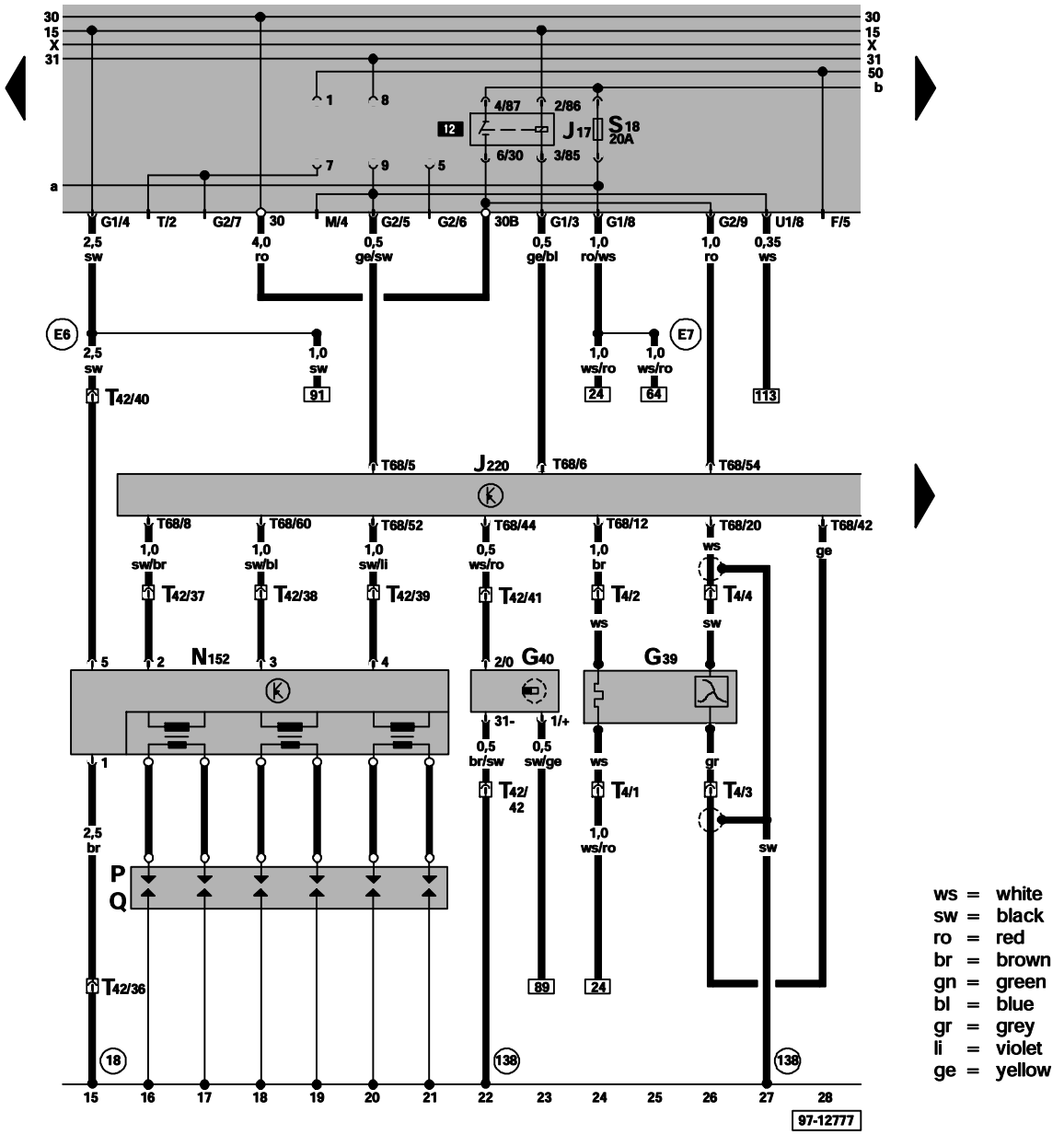

ws = white
sw = black
ro = red
br = brown
gn = green
bl = blue
gr = grey
li = violet
ge = yellow

- G39 – Heated Oxygen Sensor (HO2S) (00525)
- G40 – Camshaft Position (CMP) Sensor (00515)
- J17 – Fuel Pump (FP) Relay (01259)
- J220 – Motronic Engine Control Module (ECM), in plenum chamber, right
- N152 – Ignition Coil
- P – Spark Plug Connectors
- Q – Spark Plugs
- T4 – 4-Pin Connector, near exhaust pipe
- T42 – 42-Pin Connector, on left cylinder head
- T68 – 68-Pin Connector, on Motronic Engine Control Module (ECM)

- 18 – Ground connection, on engine block
- 138 – Ground connection (control module), in Motronic Multiport Fuel Injection (MFI) wiring harness
- E6 – Plus connection –1– (15), in Motronic Multiport Fuel Injection (MFI) wiring harness
- E7 – Plus connection (87a), in Motronic Multiport Fuel Injection (MFI) wiring harness

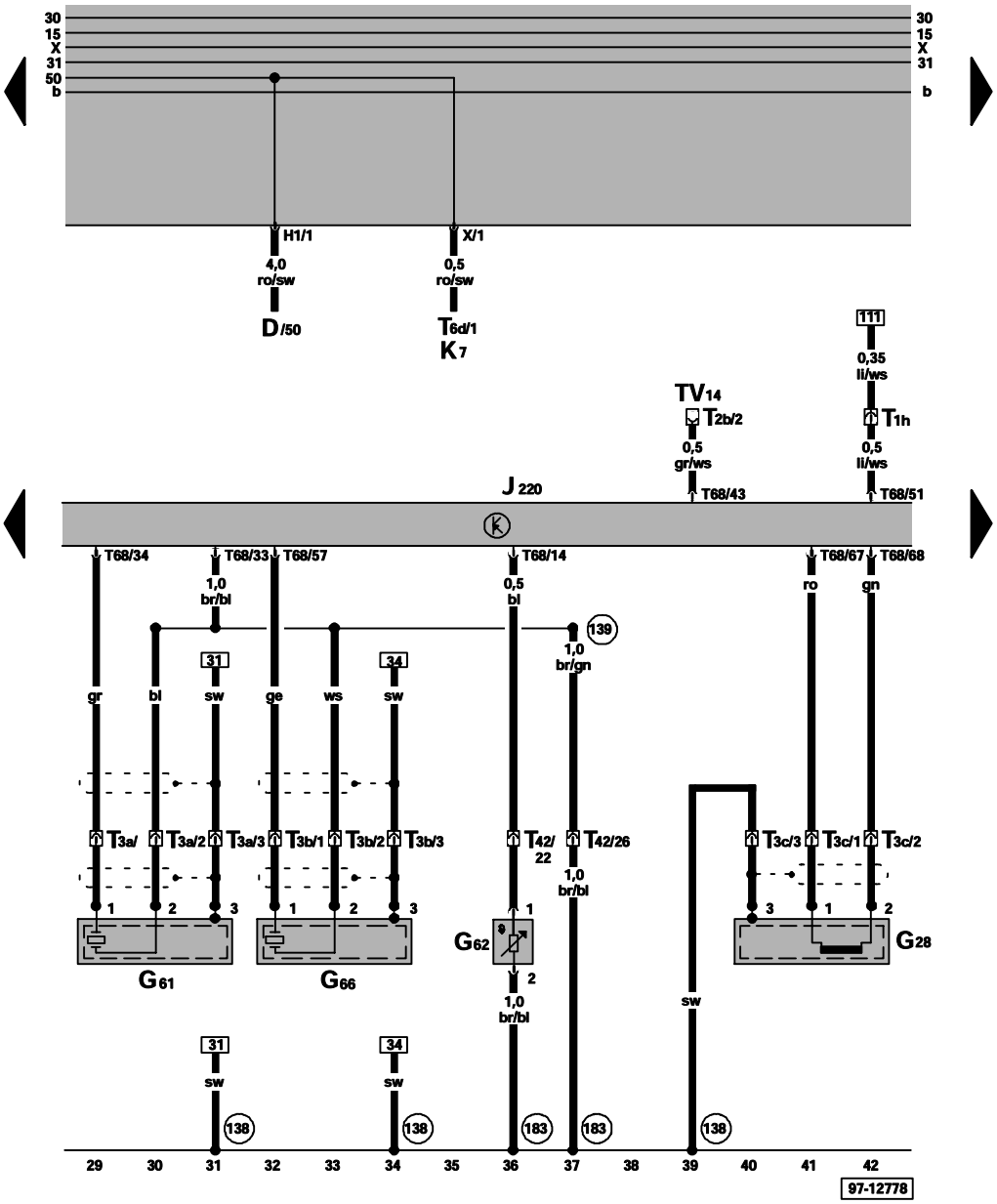

ws = white
sw = black
ro = red
br = brown
gn = green
bl = blue
gr = grey
li = violet
ge = yellow

D – Ignition/Starter Switch
G28 – Engine Speed (RPM) Sensor (00513)
G61 – Knock Sensor (KS) 1 (00524)
G62 – Engine Coolant Temperature (ECT) Sensor (00522)
G66 – Knock Sensor (KS) II (00540)
J220 – Motronic Engine Control Module (ECM), in plenum chamber, right
K7 – Brake and Parking Brake Warning Light
T1h – Single Connector, behind fuse/relay panel, consumption signal for multi-function display
T2b – Double Connector, behind console, on Data Link Connector (DLC) Wire Connector
T3a – 3-Pin Connector, near starter
T3b – 3-Pin Connector, near exhaust pipe
T3c – 3-Pin Connector, near starter
T6d – 6-Pin Connector
T42 – 42-Pin Connector, on left cylinder head
T68 – 68-Pin Connector, on Motronic Engine Control Module (ECM)
TV14 – Data Link Connector (DLC) Wire Connector, behind console

138 – Ground connection (control module), in Motronic Multiport Fuel Injection (MFI) wiring harness

139 – Ground connection (sensor Ground), in Motronic Multiport Fuel Injection (MFI) wiring harness

183 – Ground connection –2–, in engine compartment wiring harness (6 Cylinder)

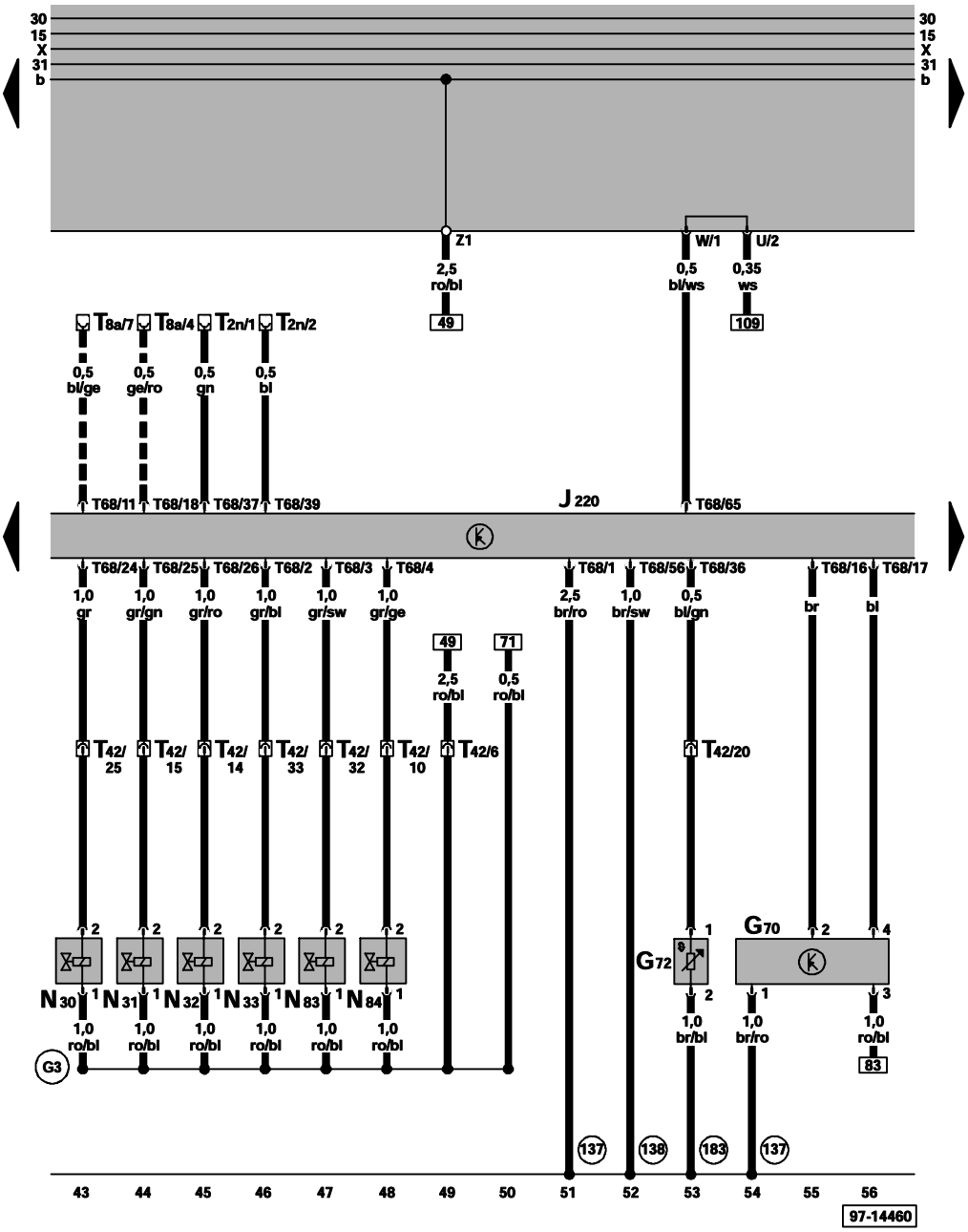

ws = white
sw = black
ro = red
br = brown
gn = green
bl = blue
gr = grey
li = violet
ge = yellow

- G70 - Mass Air Flow (MAF) Sensor (00553)
- G72 - Intake Air Temperature (IAT) Sensor
- J220 - Motronic Engine Control Module (ECM), in plenum chamber, right
- N30 - Cylinder 1 Fuel Injector (01249)
- N31 - Cylinder 2 Fuel Injector (01250)
- N32 - Cylinder 3 Fuel Injector (01251)
- N33 - Cylinder 4 Fuel Injector (01252)
- N83 - Cylinder 5 Fuel Injector (01253)
- N84 - Cylinder 6 Fuel Injector (01254)
- T2n - Double Connector, behind fuse/relay panel, air conditioning connection
- T8a - 8-Pin Connector, behind fuse/relay panel
- T42 - 42-Pin Connector, on left cylinder head
- T68 - 68-Pin Connector

- (137) - Ground connection (end stage), in Motronic Multiport Fuel Injection (MFI) wiring harness
- (138) - Ground connection (control module), in Motronic Multiport Fuel Injection (MFI) wiring harness
- (183) - Ground connection -2-, in engine compartment wiring harness (6 Cylinder)
- (G3) - Plus connection, in injector wiring harness

▬ ▬ ▬ Automatic transmission only

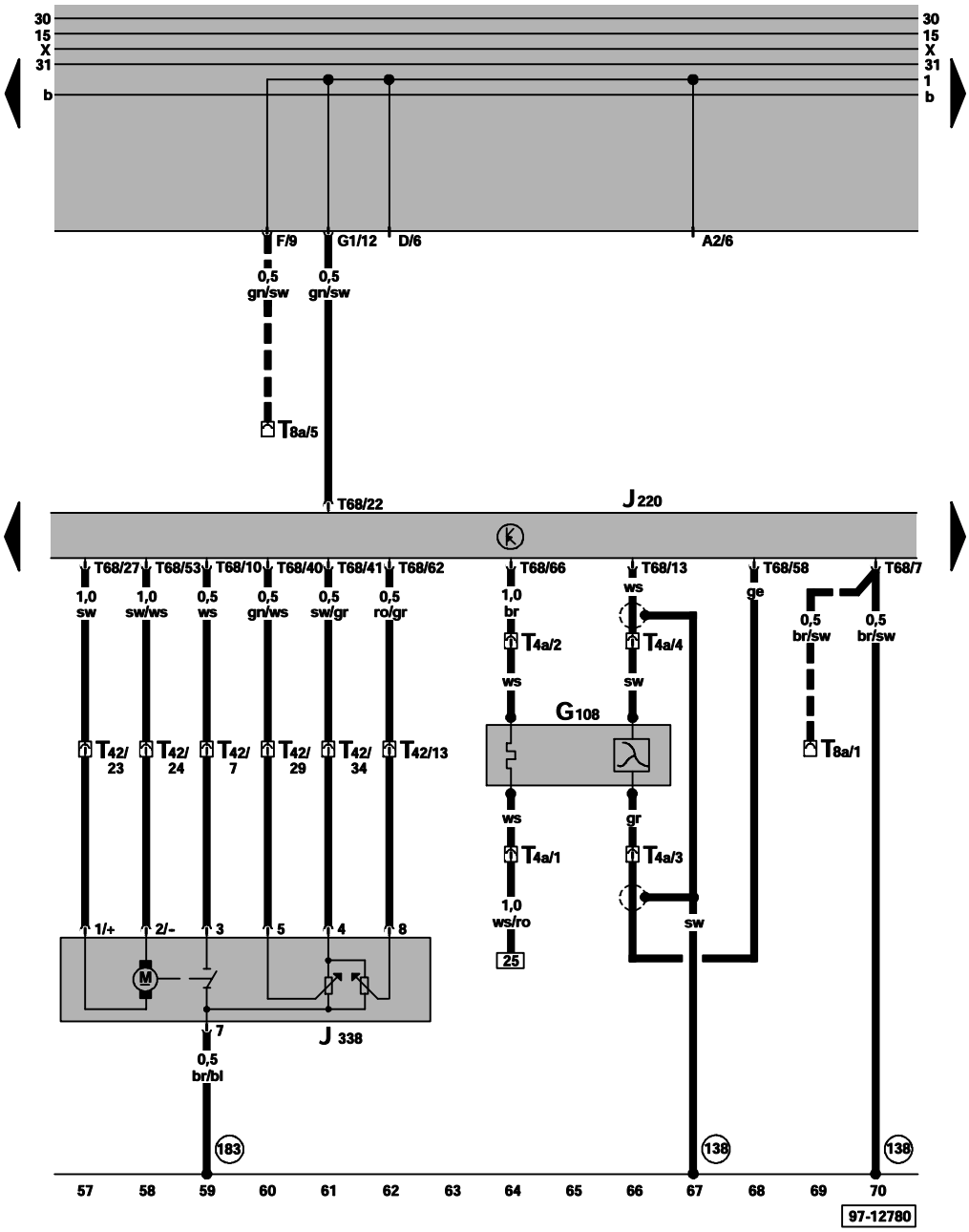

ws = white
sw = black
ro = red
br = brown
gn = green
bl = blue
gr = grey
li = violet
ge = yellow

G108 - Heated Oxygen Sensor (HO2S) 2 (00555)
J220 - Motronic Engine Control Module (ECM), in plenum chamber, right
J338 - Throttle Valve Control Module (01165)
T4a - 4-Pin Connector, near exhaust pipe
T8a - 8-Pin Connector, behind fuse/relay panel
T42 - 42-Pin Connector, on left cylinder head
T68 - 68-Pin Connector

138 - Ground connection (control module), in Motronic Multiport Fuel Injection (MFI) wiring harness
183 - Ground connection -2-, in engine compartment wiring harness (6 Cylinder)

▪▪▪ Automatic transmission only

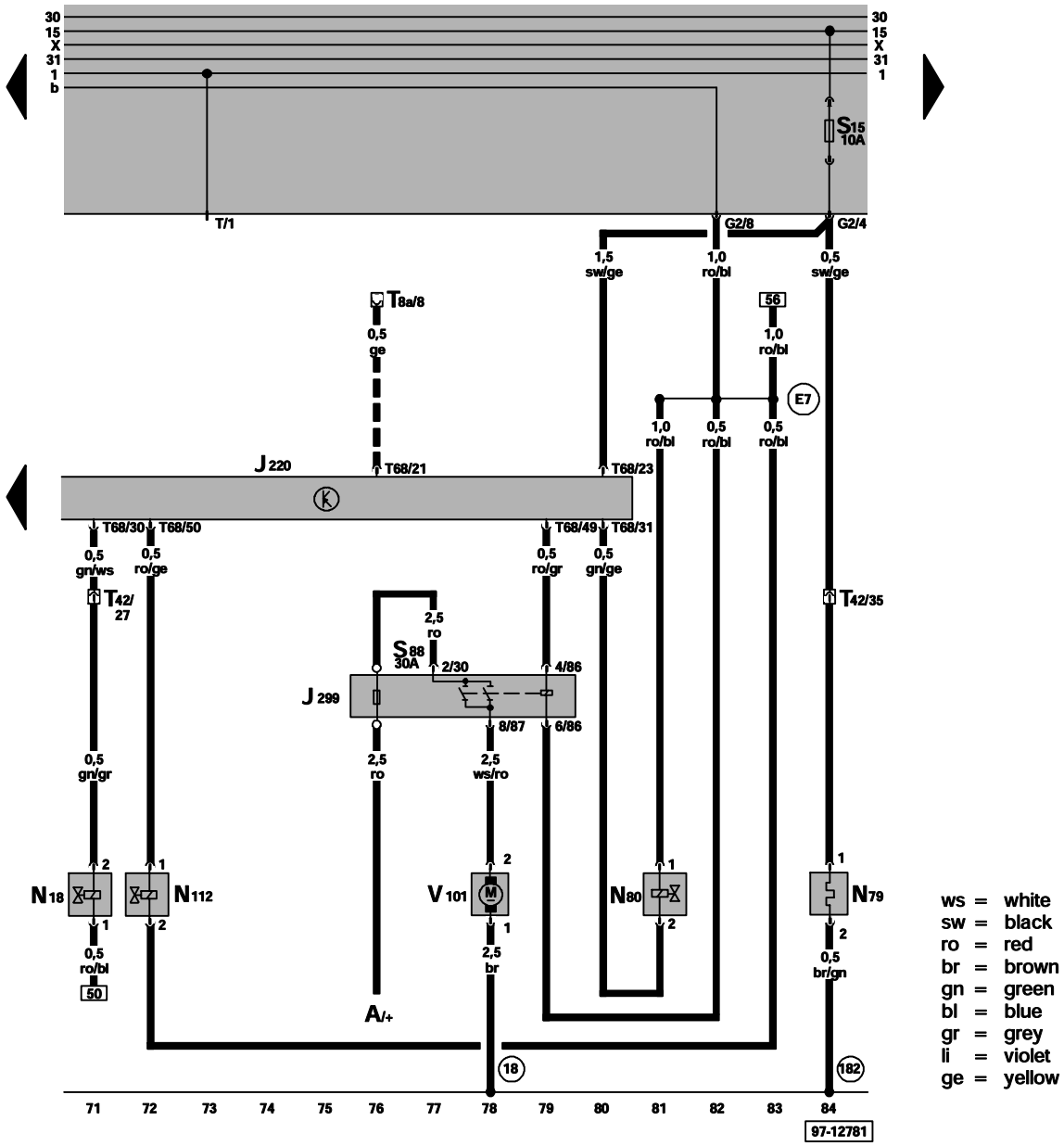

A – Battery
J220 – Motronic Engine Control Module (ECM), in plenum chamber, right
J299 – Secondary Air Injection (AIR) Pump Relay (01264)
N18 – EGR Vacuum Regulator Solenoid Valve
N79 – Positive Crankcase Ventilation (PCV) Heating Element
N80 – Evaporative Emission (EVAP) Canister Purge Regulator Valve (01247)
N112 – Secondary Air Injection (AIR) Solenoid Valve (01235)
S88 – Fuse Strip for Secondary Air Injection (AIR) Pump Motor
T8a – 8-Pin Connector, behind fuse/relay panel
T42 – 42-Pin Connector
T68 – 68-Pin Connector, on Motronic Engine Control Module (ECM)
V101 – Secondary Air Injection (AIR) Pump Motor

(18) – Ground connection, on engine block

(182) – Ground connection –1–, in engine compartment wiring harness (6 Cylinder)

(E7) – Plus connection (87a), in Multiport Fuel Injection (MFI) wiring harness

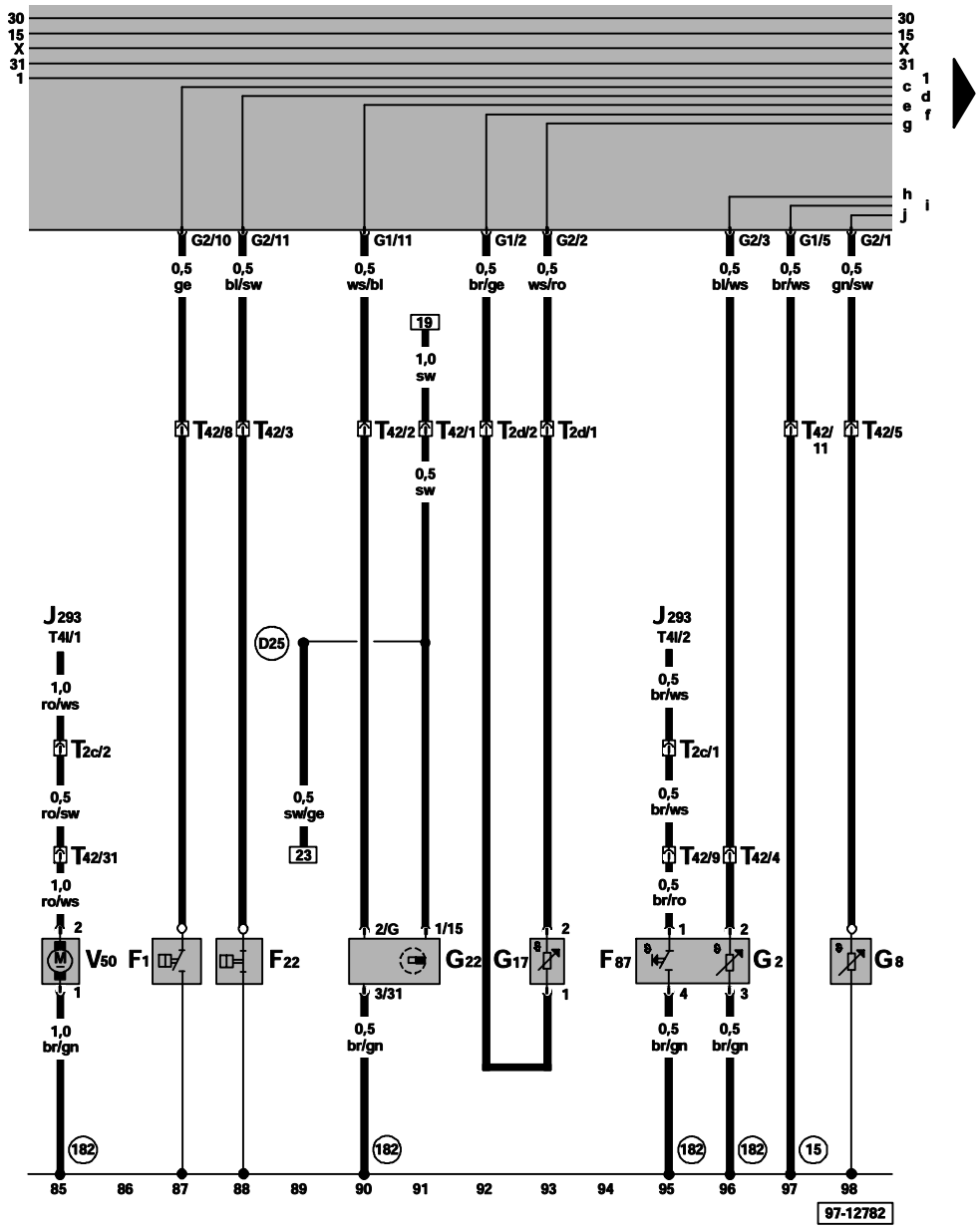

ws = white
sw = black
ro = red
br = brown
gn = green
bl = blue
gr = grey
li = violet
ge = yellow

F1 – Oil Pressure Switch
F22 – 0.3 Bar Oil Pressure Switch
F87 – After-Run Coolant Fan Control (FC) Thermal Switch
G2 – Engine Coolant Temperature (ECT) Sensor
G8 – Engine Oil Temperature Sensor
G17 – Outside Air Temperature Sensor
G22 – Speedometer Vehicle Speed Sensor (VSS) (01086), (hall generator, on transmission)
J293 – Coolant FC (Fan Control) Control Module, in engine compartment, left
T2c – Double Connector, behind fuse/relay panel
T2d – Double Connector, in engine compartment, right
T4l – 4-Pin Connector, on Coolant FC (Fan Control) Control Module
T42 – 42-Pin Connector, on left cylinder head
V50 – Coolant Pump

(15) – Ground connection, on cylinder head

(182) – Ground connection –1–, in engine compartment wiring harness (6 Cylinder)

(D25) – Plus connection (15), in engine pre-wiring harness wiring

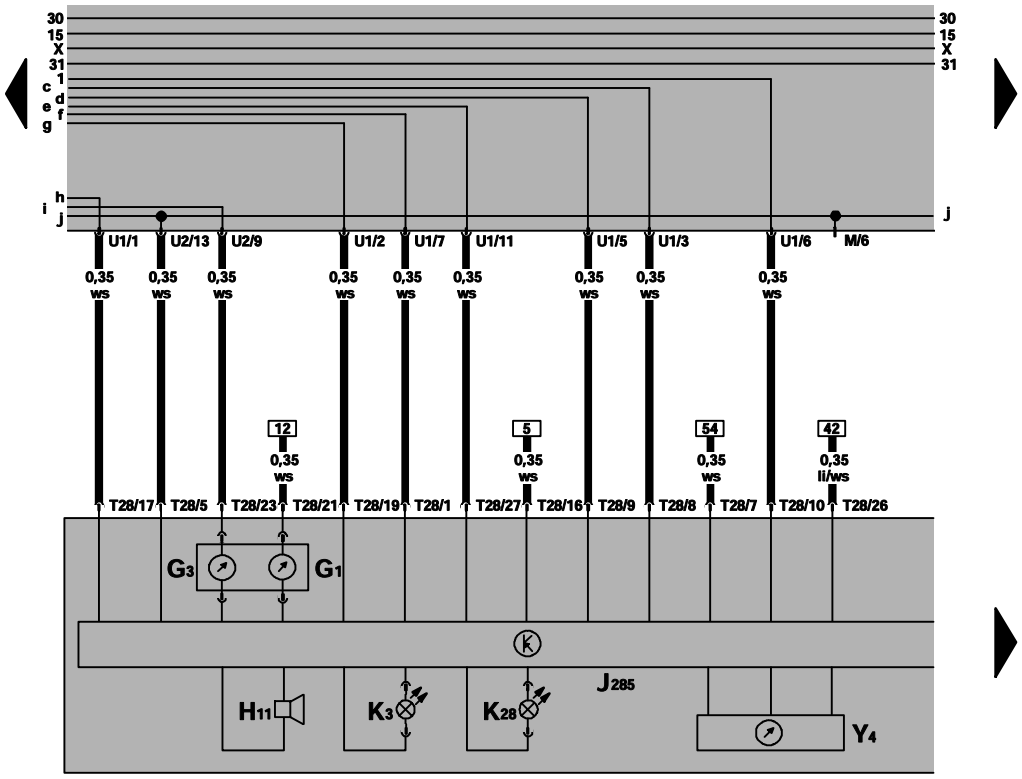

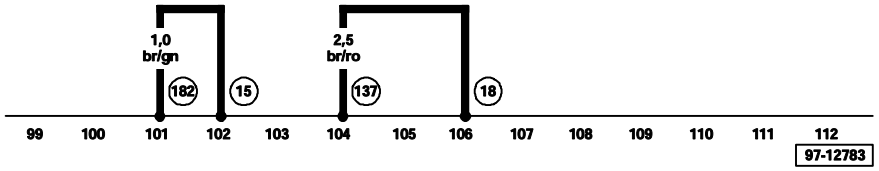

ws = white
sw = black
ro = red
br = brown
gn = green
bl = blue
gr = grey
li = violet
ge = yellow

G1 – Fuel Gauge
G3 – Engine Coolant Temperature (ECT) Gauge
H11 – Oil Pressure Warning Buzzer
J285 – Control Module With Display Unit In Instrument Cluster
K3 – Oil Pressure Warning Light
K28 – Engine Coolant Level/Temperature (ECL/ECT) Warning Light
T28 – 28-Pin Connector, on instrument cluster
Y4 – Odometer Display

(15) – Ground connection, on cylinder head

(18) – Ground connection, on engine block

(137) – Ground connection (end stage), in Motronic Multiport Fuel Injection (MFI) wiring harness

(182) – Ground connection –1–, in engine compartment wiring harness (6 Cylinder)

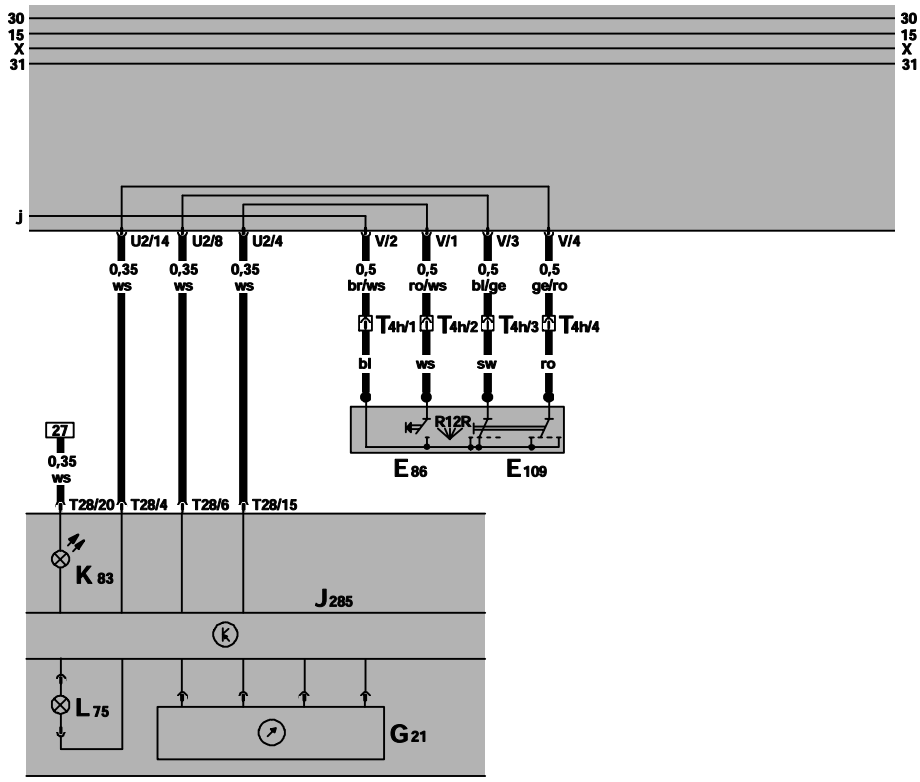

ws = white
sw = black
ro = red
br = brown
gn = green
bl = blue
gr = grey
li = violet
ge = yellow

113 114 115 116 117 118 119 120 121 122 123 124 251 126

97-12784

E86 – Multi-Function Indicator Mode Select Switch
E109 – Multi-Function Indicator Memory Switch
G21 – Speedometer (00663)
J285 – Control Module With Display Unit In Instrument Cluster
K83 – Malfunction Indicator Lamp (MIL)
L75 – Digital Display Light
T4h – 4-Pin Connector, behind steering column switch cover
T28 – 28-Pin Connector, on instrument cluster

Automatic transmission,
D 2.8 Engine otronic ultiport Fuel n ection F /128 W, code AAA,
D 2.0 Engine otronic ultiport Fuel n ection F /85 W, code A A,

from August 1995

Relay location
For relay location and multiple connectors see also section "component locations".

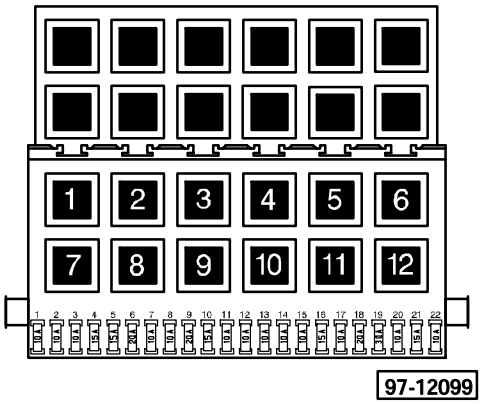

Fuse colors

30A – green
25A – white
20A – yellow
15A – blue
10A – red

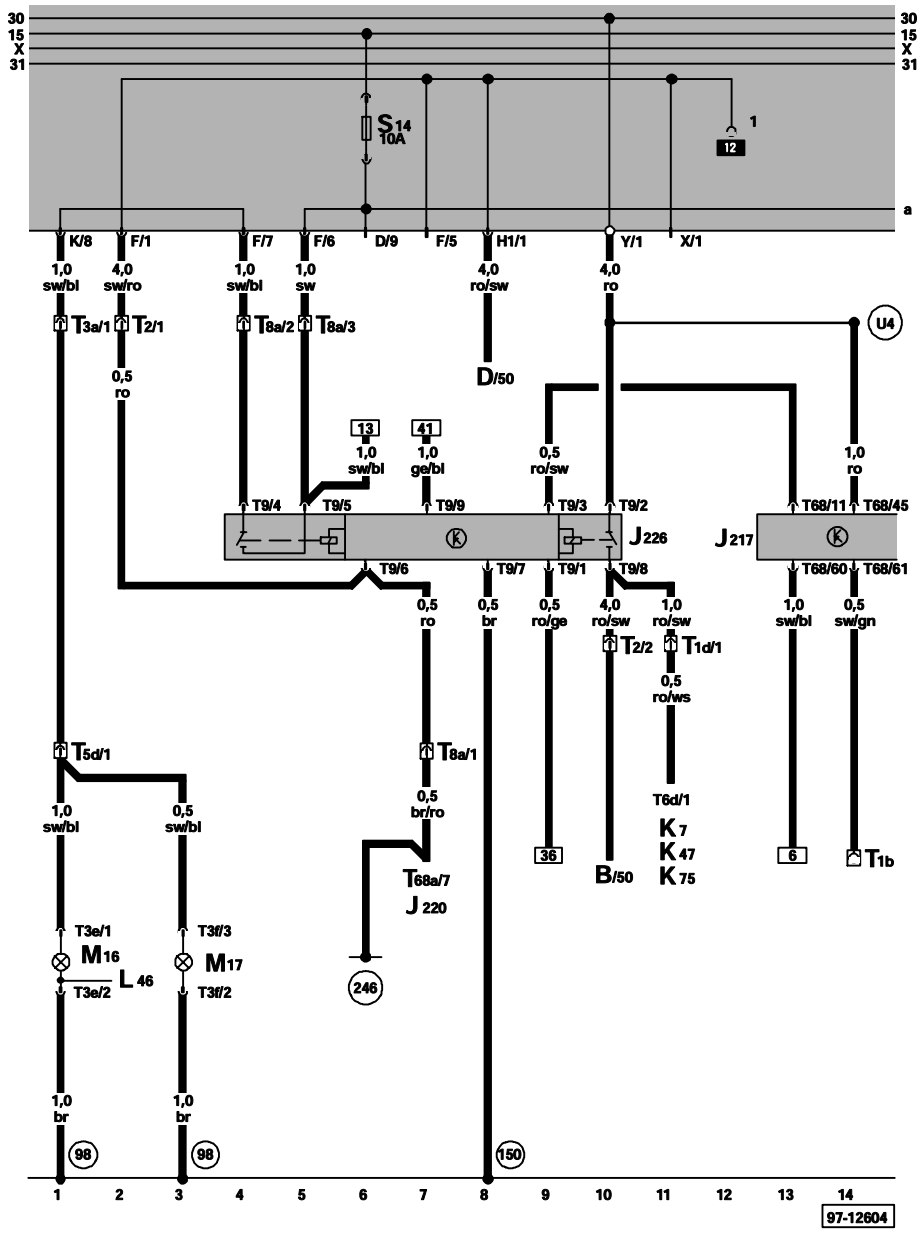

ws = white
sw = black
ro = red
br = brown
gn = green
bl = blue
gr = grey
li = violet
ge = yellow

B – Starter
D – Ignition/Starter Switch
J217 – Transmission Control Module (TCM), below rear seat bench
J220 – Motronic Engine Control Module (ECM)
J226 – Park/Neutral Position (PNP) Relay, behind instrument panel, left
K7 – Brake and Parking Brake Warning Light
K47 – ABS Warning Light
K75 – Airbag Malfunction Indicator Light (MIL)
L46 – Left Rear Fog Light
M16 – Left Back-Up Light
M17 – Right Back-Up Light
T1b – Single Connector, connection for cruise control
T1d – Single Connector, behind fuse/relay panel
T2 – Double Connector, behind fuse/relay panel
T3a – 3-Pin Connector, in luggage compartment, left
T3e – 3-Pin Connector
T3f – 3-Pin Connector
T5d – 5-Pin Connector, in rear lid
T6d – 6-Pin Connector
T8a – 8-Pin Connector, behind fuse/relay panel
T9 – 9-Pin Connector
T68 – 68-Pin Connector
T68a – 68-Pin Connector, on Motronic Engine Control Module (ECM)
98 – Ground connection, in rear lid wiring harness
150 – Ground connection, in automatic transmission wiring harness
246 – Ground connection (control module), in wiring harness engine
U4 – Wire connection (30), in automatic transmission wiring harness

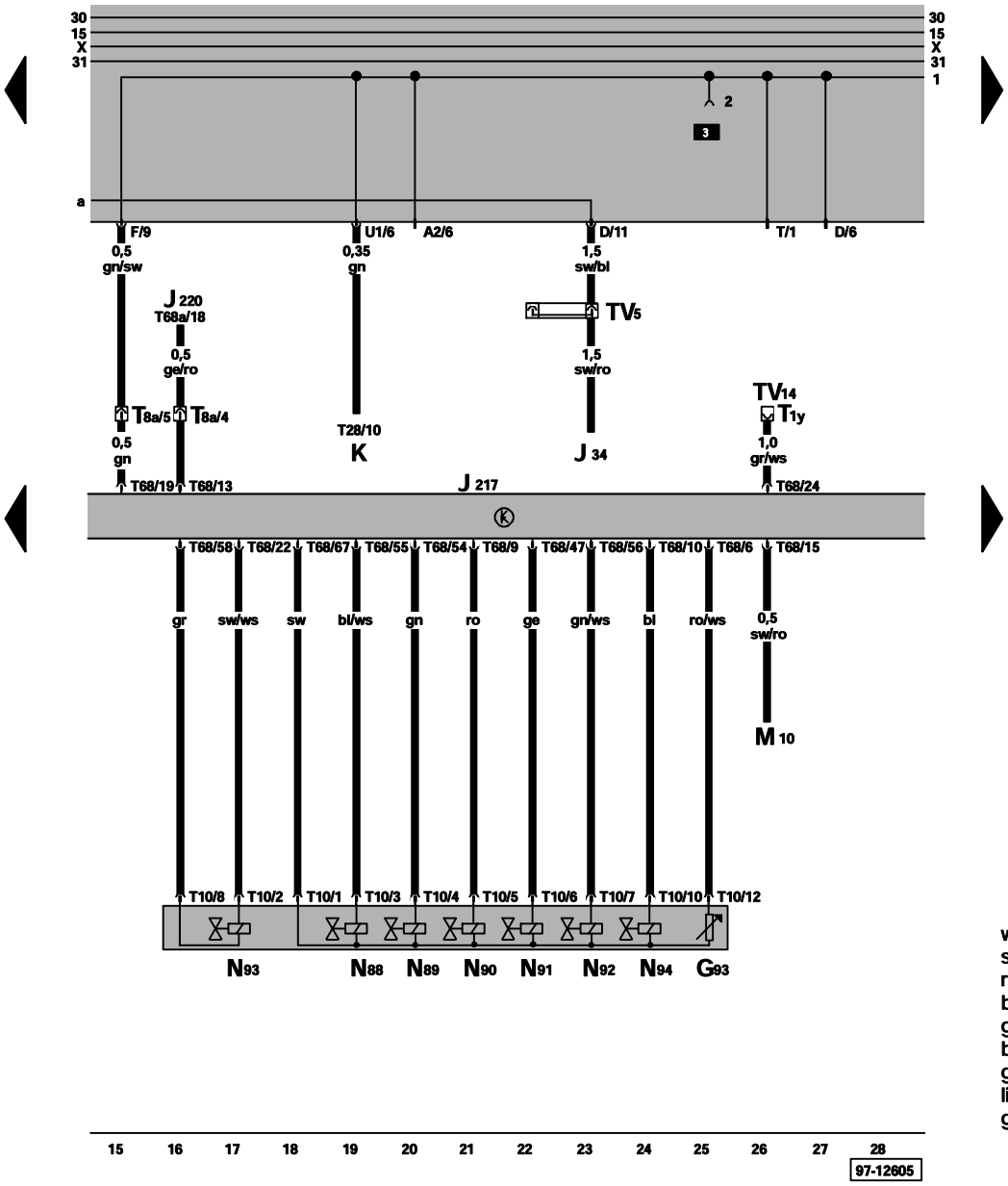

ws = white
sw = black
ro = red
br = brown
gn = green
bl = blue
gr = grey
li = violet
ge = yellow

G93 – Transmission Fluid Temperature Sensor (00300–1333)
J34 – Seat Belt Warning System Relay
J217 – Transmission Control Module (TCM), below rear seat bench
J220 – Motronic Engine Control Module (ECM)
K – Instrument Cluster
M10 – Right Brake Light
N88 – Solenoid Valve 1 (00258)
N89 – Solenoid Valve 2 (00260)
N90 – Solenoid Valve 3 (00262)
N91 – Solenoid Valve 4 (00264)
N92 – Solenoid Valve 5 (00266)
N93 – Solenoid Valve 6 (00268)
N94 – Solenoid Valve 7 (00270)

T1y – Single Connector, on Data Link Connector (DLC) Wire Connector
T8a – 8-Pin Connector, behind fuse/relay panel
T10 – 10-Pin Connector
T28 – 28-Pin Connector, on instrument cluster
T68 – 68-Pin Connector
T68a – 68-Pin Connector, on Motronic Engine Control Module (ECM)
TV5 – Terminal 15a Wire Connector, above fuse/relay panel
TV14 – Data Link Connector (DLC) Wire Connector, behind console

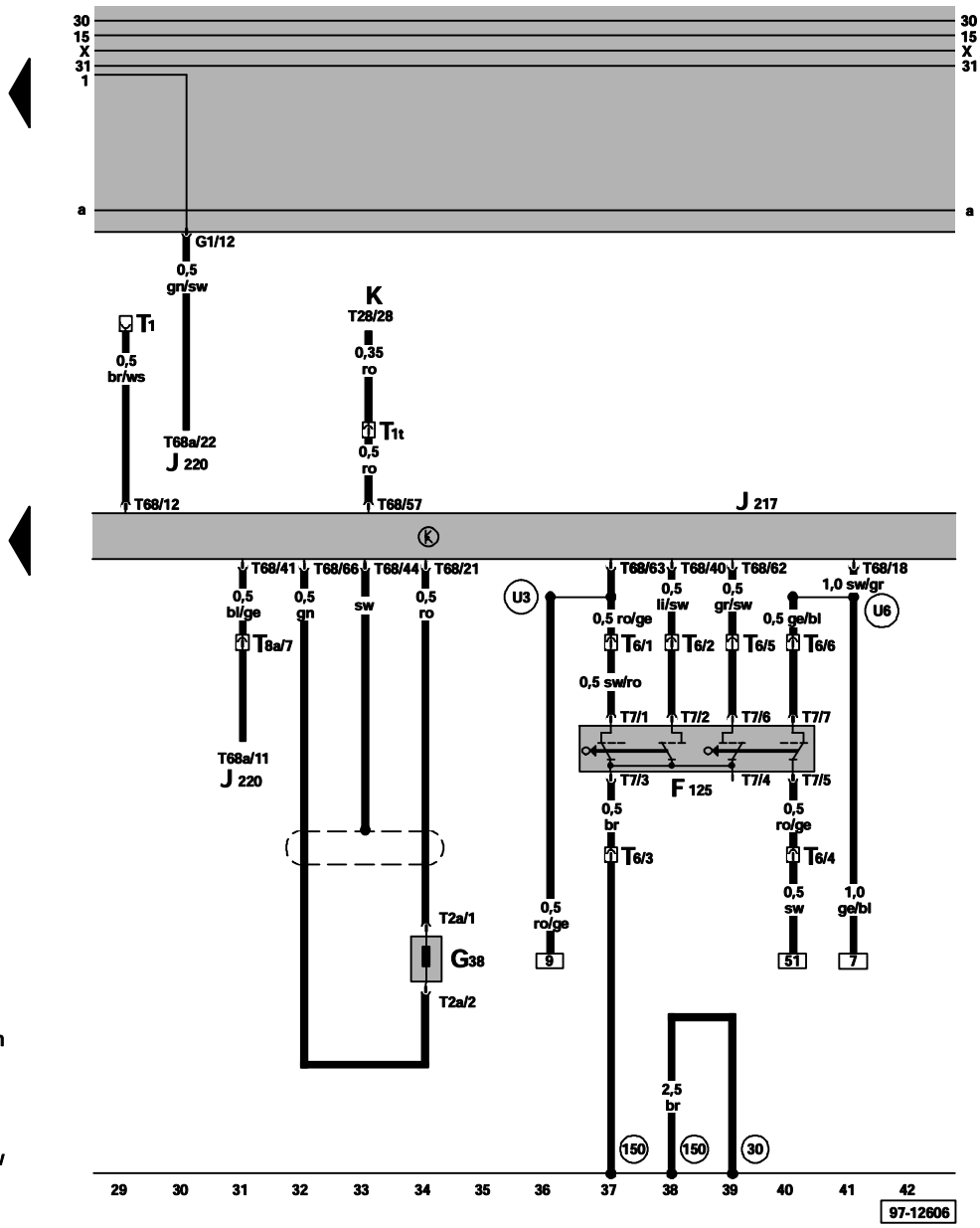

ws = white
sw = black
ro = red
br = brown
gn = green
bl = blue
gr = grey
li = violet
ge = yellow

F125 – Multi-Function Transmission Range (TR) Switch (00293)
G38 – Transmission Vehicle Speed Sensor (VSS)
J217 – Transmission Control Module (TCM), below rear seat bench
J220 – Motronic Engine Control Module (ECM)
K – Instrument Cluster
T1 – Single Connector, behind fuse/relay panel, A/C connection
T1t – Single Connector, behind fuse/relay panel, connection for Transmission Range (TR) Selector Lever Display
T2a – Double Connector, white
T6 – 6-Pin Connector, in engine compartment, left
T7 – 7-Pin Connector
T8a – 8-Pin Connector, behind fuse/relay panel
T28 – 28-Pin Connector, on instrument cluster
T68 – 68-Pin Connector
T68a – 68-Pin Connector, on Motronic Engine Control Module (ECM)
(30) – Ground connection, –1–, beside fuse/rela panel
(150) – Ground connection, in automatic transmission wiring harness
(U3) – Wire connection, in automatic transmissior wiring harness
(U6) – Wire connection, in automatic transmissior wiring harness

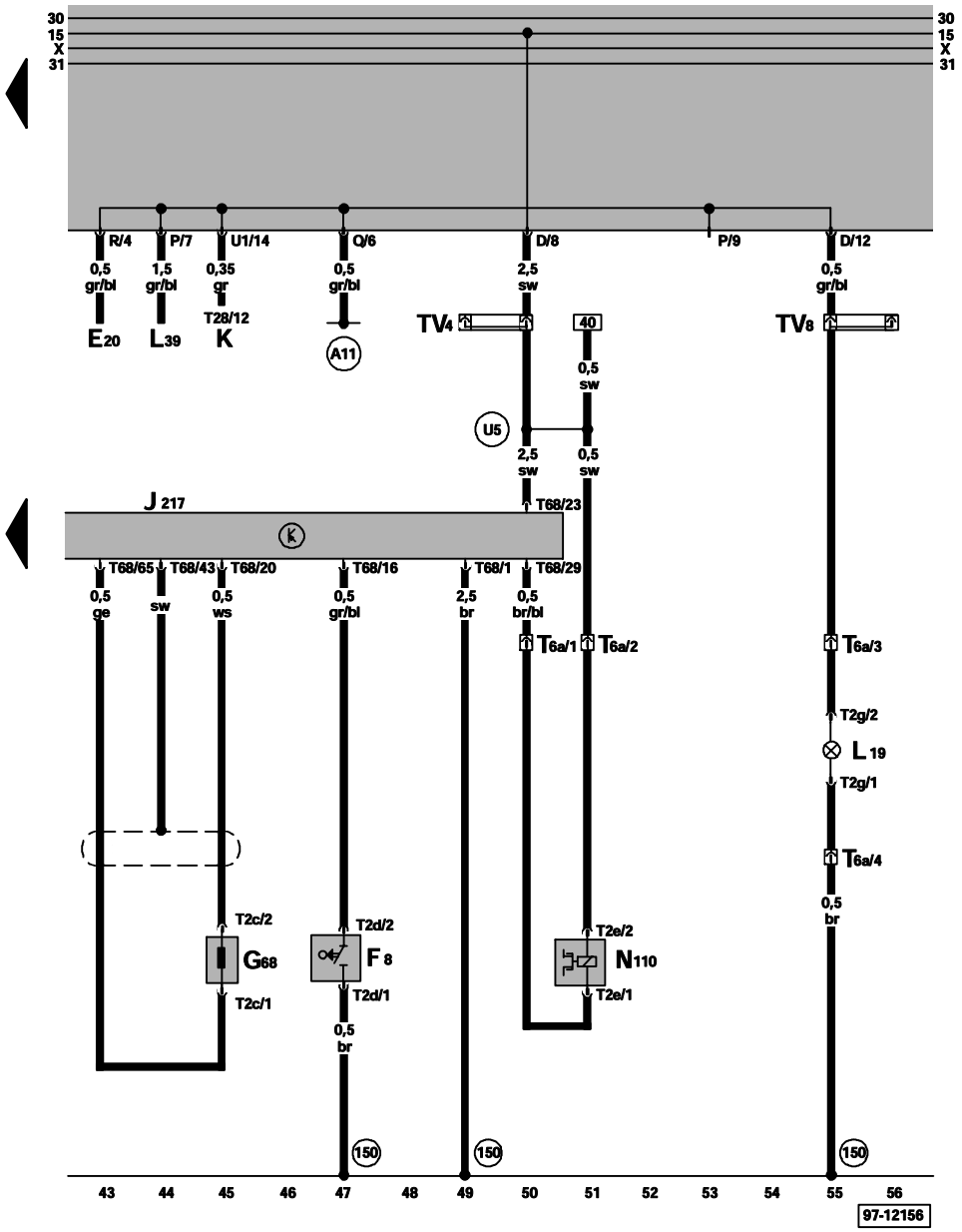

ws = white
sw = black
ro = red
br = brown
gn = green
bl = blue
gr = grey
li = violet
ge = yellow

E20 – Instrument Panel Light Dimmer Switch
F8 – Kick Down Switch
G68 – Vehicle Speed Sensor (VSS) (00281)
J217 – Transmission Control Module (TCM), below rear seat bench
K – Instrument Cluster
L19 – Automatic Transmission Console Light
L39 – Rear Window Defogger Switch Light
N110 – Shift Lock Solenoid (01236)
T2c – Double Connector, black
T2d – Double Connector
T2e – Double Connector
T2g – Double Connector
T6a – 6-Pin Connector, near gearshift lever
T28 – 28-Pin Connector, on instrument cluster
T68 – 68-Pin Connector
TV4 – Terminal 15 Wire Connector, above fuse/relay panel
TV8 – Terminal 58b Wire Connector, above fuse/relay panel

(150) – Ground connection, in automatic transmission wiring harness

(A11) – Plus connection (58b) in instrument panel wiring harness

(U5) – Wire connection –2– (15), in automatic transmission wiring harness

Anti loc ra e system A wit electronic differential loc E ,

from August 1995

Relay location
For relay location and multiple connectors see also section "component locations".

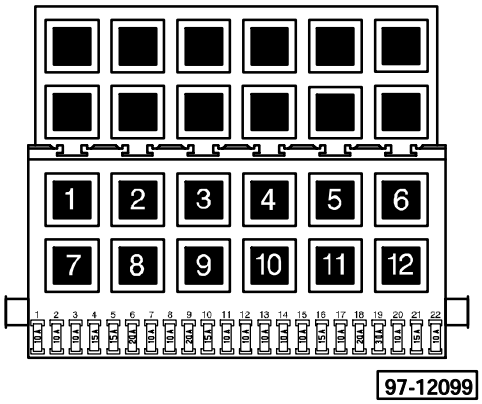

Fuse colors

30A – green
25A – white
20A – yellow
15A – blue
10A – red

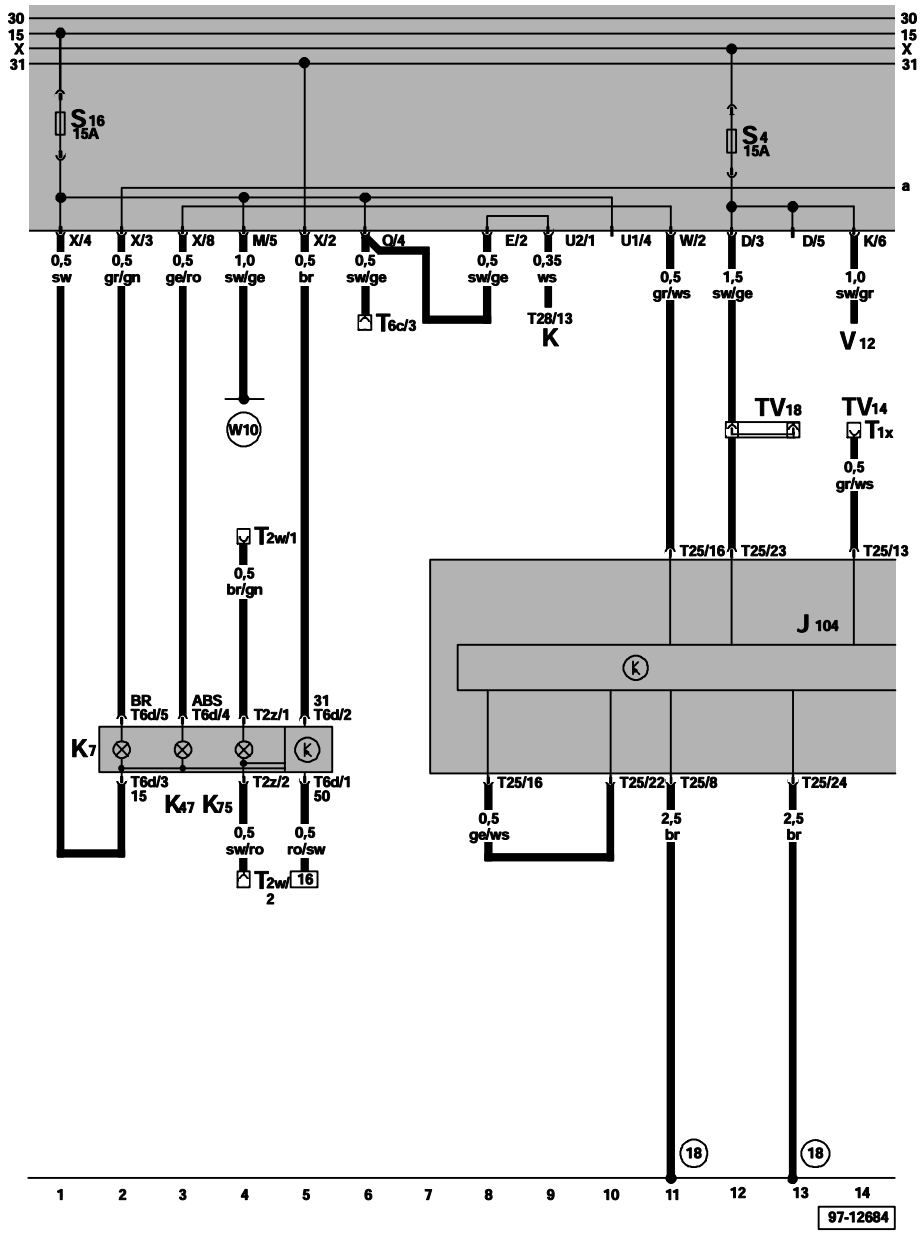

ws = white
sw = black
ro = red
br = brown
gn = green
bl = blue
gr = grey
li = violet
ge = yellow

J104 – ABS Control Module (w/EDL), in engine compartment, left
K – Instrument Cluster
K7 – Brake and Parking Brake Warning Light (01047)
K47 – ABS Warning Light
K75 – Airbag Warning Light
T1x – Single Connector
T2w – Double Connector, behind fuse/relay panel
T2z – Double Connector
T6c – 6-Pin Connector, behind fuse/relay panel
T6d – 6-Pin Connector
T25 – 25-Pin Connector
T28 – 28-Pin Connector, on instrument cluster
TV14 – Data Link Connector (DLC) Wire Connector, behind console
TV18 – Distributor for Terminal Xa, above fuse/relay panel
V12 – Rear Window Wiper Motor

(18) - Ground connection, on engine block

(W10) - Plus connection (15), in rear wiring harness

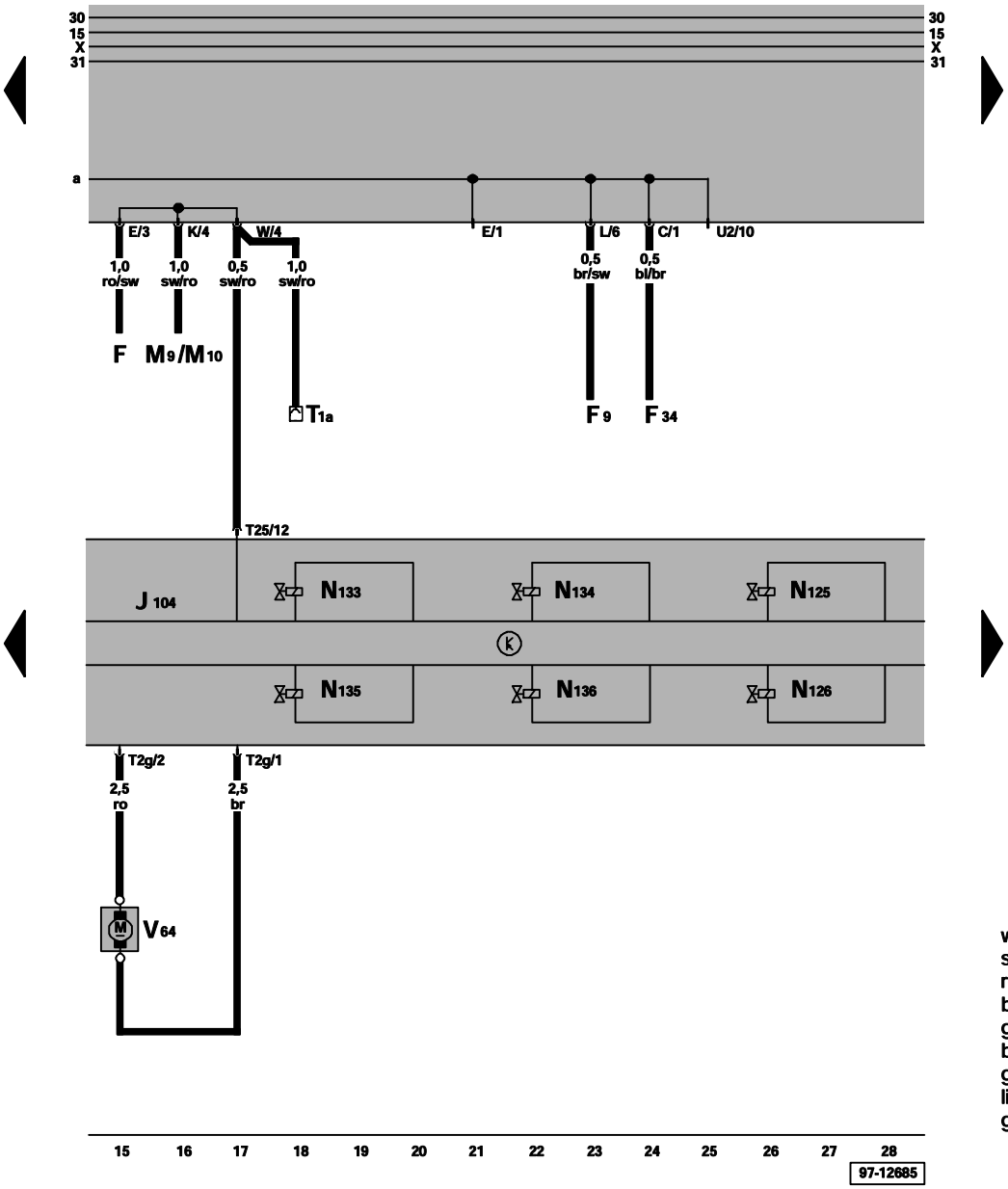

ws = white
sw = black
ro = red
br = brown
gn = green
bl = blue
gr = grey
li = violet
ge = yellow

F – Brake Light Switch
F9 – Parking Brake Warning Light Switch
F34 – Brake Fluid Level Warning Switch
J104 – ABS Control Module (w/EDL), in engine compartment, left
M9 – Left Brake Light
M10 – Right Brake Light
N125 – Differential Lock Valve 1 (00279)
N126 – Differential Lock Valve 2 (00280)
N133 – Right Rear ABS Inlet Valve (00273)
N134 – Left Rear ABS Inlet Valve (00274)
N135 – Right Rear ABS Outlet Valve (00275–1213)
N136 – Left Rear ABS Outlet Valve (00276–1214)
T1a – Single Connector, above fuse/relay panel, cruise control connection
T2g – Double Connector, on control module
T25 – 25-Pin Connector
V64 – ABS Hydraulic Pump (01276)

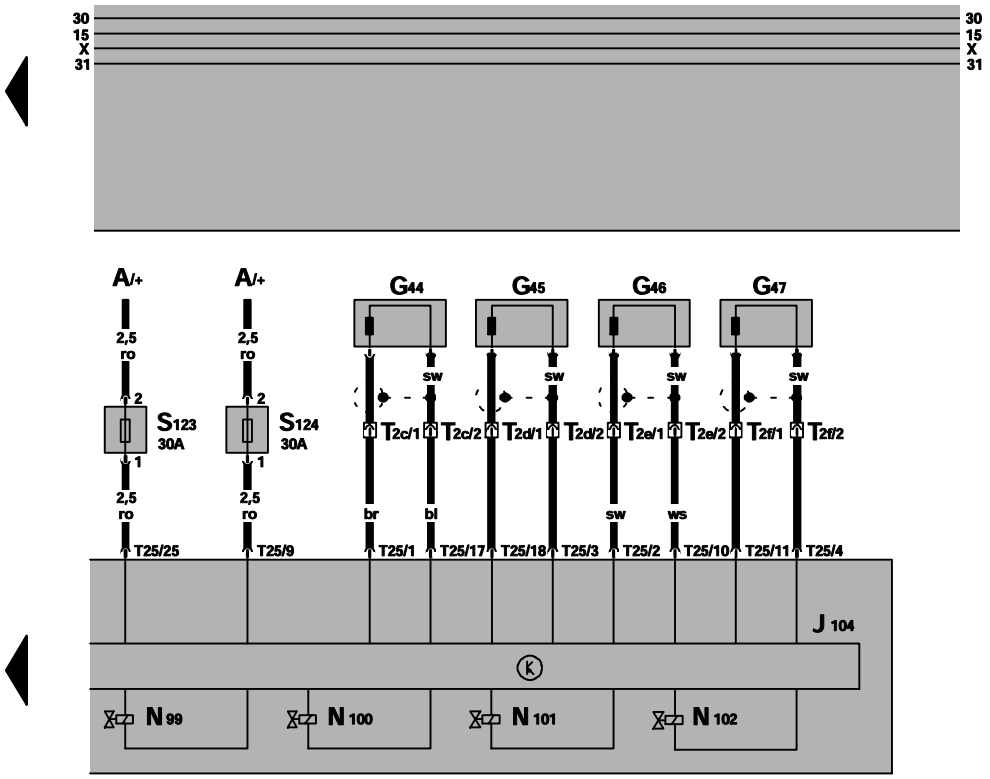

ws = white
sw = black
ro = red
br = brown
gn = green
bl = blue
gr = grey
li = violet
ge = yellow

29 30 31 32 33 34 35 36 37 38 39 40 41 42

97-12686

A – Battery
G44 – Right Rear ABS Wheel Speed Sensor (00287)
G45 – Right Front ABS Wheel Speed Sensor (00285)
G46 – Left Rear ABS Wheel Speed Sensor (00290)
G47 – Left Front ABS Wheel Speed Sensor (00283)
J104 – ABS Control Module (w/EDL), in engine compartment left
N99 – Right Front ABS Inlet Valve (00259)
N100 – Right Front ABS Outlet Valve (00267)
N101 – Left Front ABS Inlet Valve (00257)
N102 – Left Front ABS Outlet Valve (00265)

S123 – Fuse 1 for Control Module – ABS, above fuse/relay panel
S124 – Fuse 2 for Control Module – ABS, above fuse/relay panel
T2c – Double Connector, below rear seat bench
T2d – Double Connector, behind suspension strut, right
T2e – Double Connector, below rear seat bench
T2f – Double Connector, behind suspension strut, left
T25 – 25-Pin Connector

Passat Standard Equipment,

from August 1995

Relay location
For relay location and multiple connectors see also section "component locations".

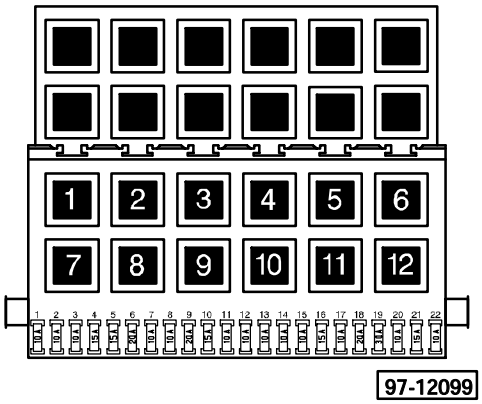

2 – Rear Window Wiper/Washer Relay (72)

4 – Load Reduction Relay (18)

6 – Emergency Flasher Relay (21)

8 – Washer/Wiper Intermittent Relay (19, 99)

9 – Warning Buzzer for Parking Light and Radio (36)

10 – Fog Light Relay (53)

11 – Dual Horn Relay (53)

– Seat Belt Warning System Relay (4)

Note: Number in parentheses indicates production control number stamped on relay housing.

Fuse colors

30A – green
25A – white
20A – yellow
15A – blue
10A – red

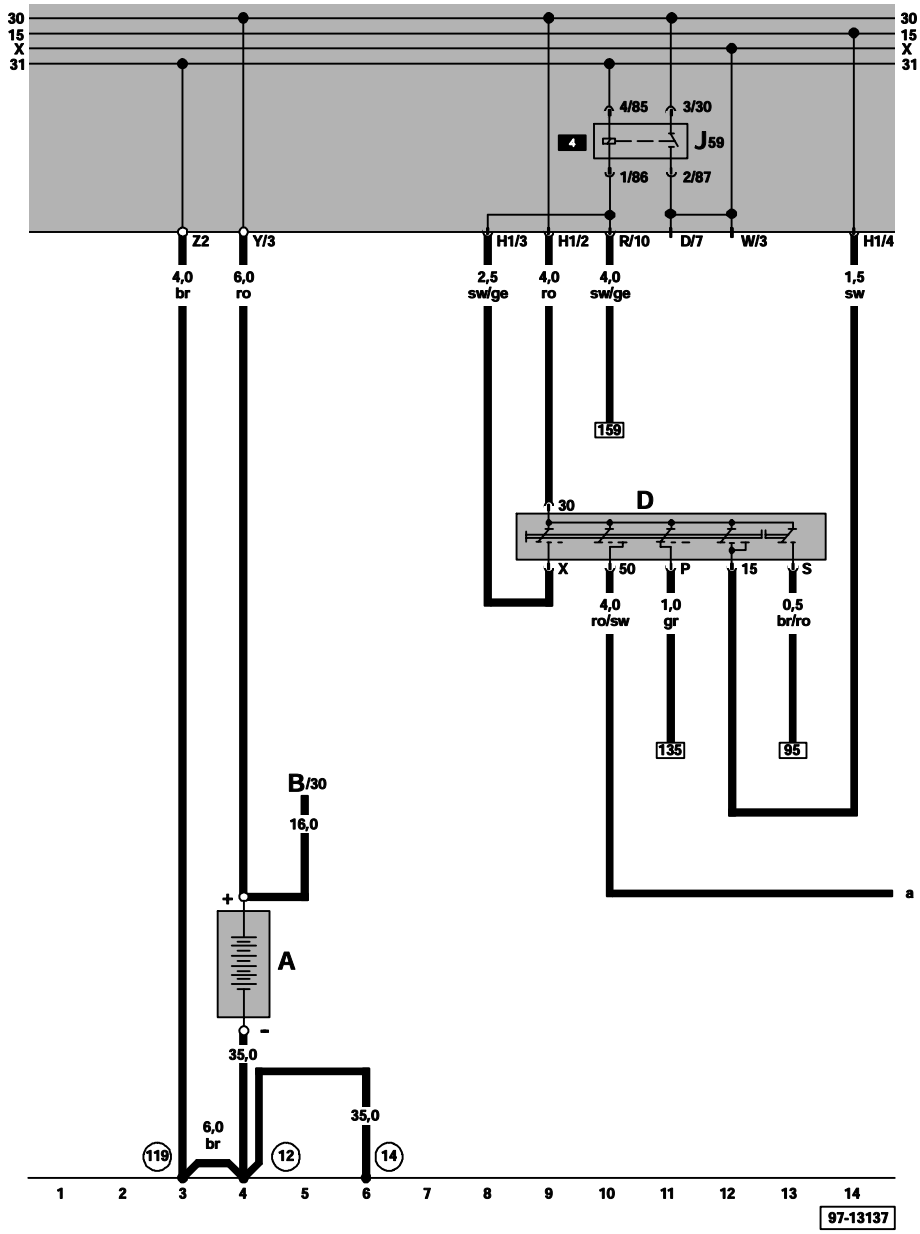

ws = white
sw = black
ro = red
br = brown
gn = green
bl = blue
gr = grey
li = violet
ge = yellow

A – Battery
B – Starter
D – Ignition/Starter Switch
J59 – Load Reduction Relay

(12) – Ground connection, in engine compartment, left, near battery

(14) – Ground connection, on transmission

(119) – Ground connection -1-, in headlight wiring harness

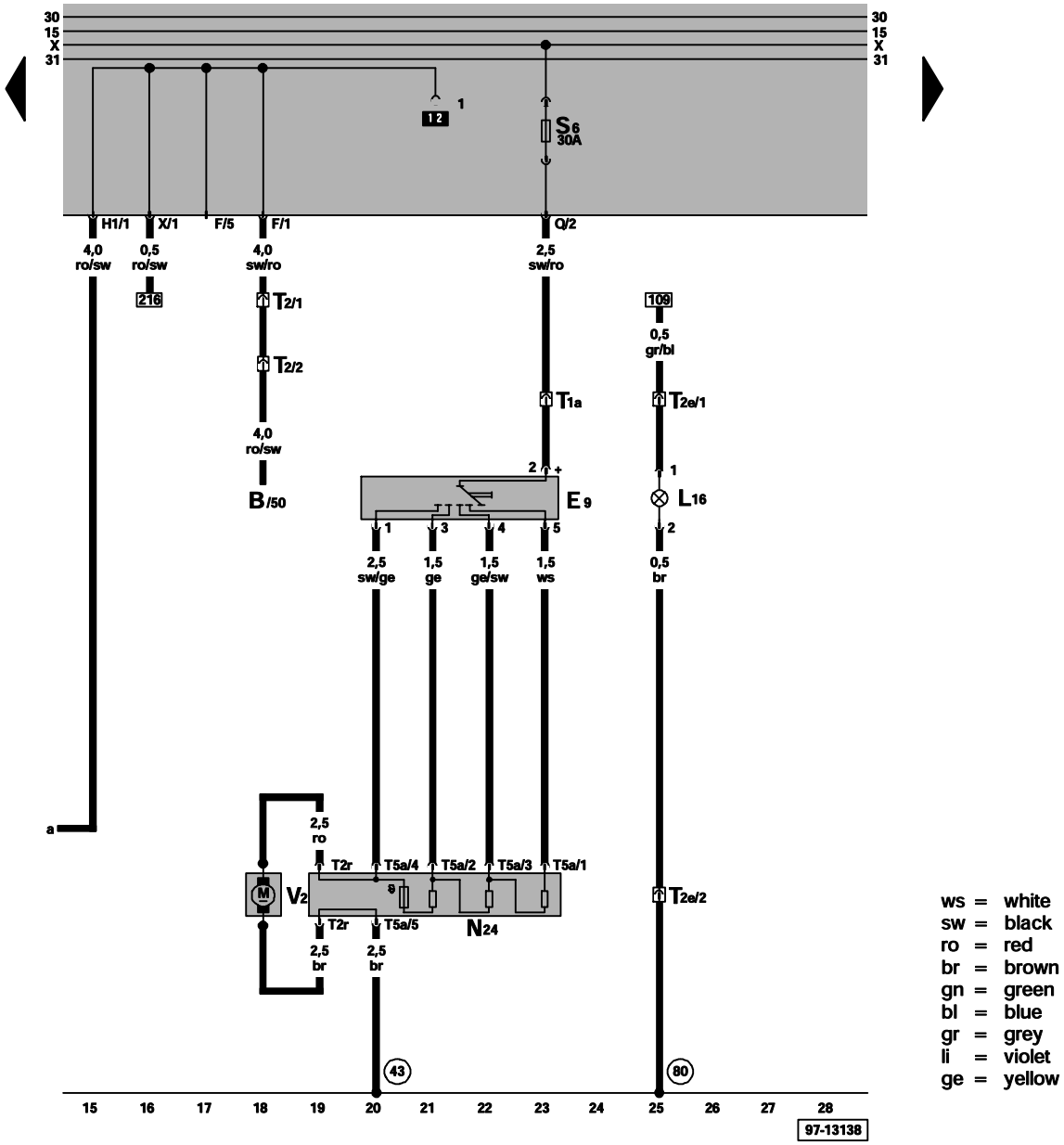

B – Starter
E9 – Fresh Air Blower Switch
L16 – Fresh Air Control Lever Light
N24 – Fresh Air Blower Series Resistance With Fuse
T1a – Single Connector, behind instrument panel, center
T2 – Double Connector, behind fuse/relay panel
T2e – Double Connector, behind instrument panel, center
T2r – Double Connector
T5a – 5-Pin Connector
V2 – Fresh Air Blower

43 – Ground connection, on right A-pillar, lower part
80 – Ground connection -1-, in instrument panel wiring harness

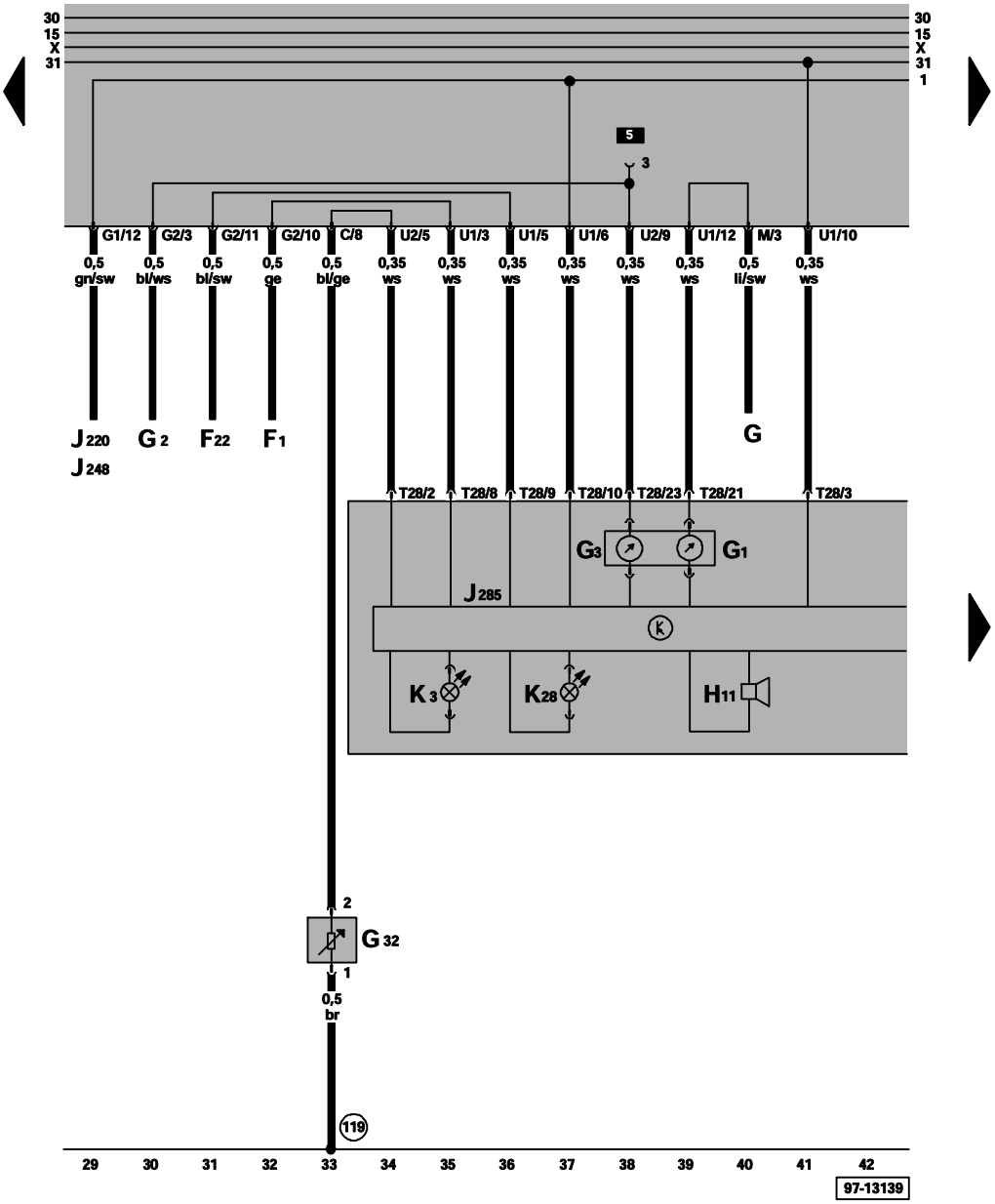

ws = white
sw = black
ro = red
br = brown
gn = green
bl = blue
gr = grey
li = violet
ge = yellow

F1 – Oil Pressure Switch *
F22 – 0.3 Bar Oil Pressure Switch
G – Fuel Level Sensor
G1 – Fuel Gauge
G2 – Engine Coolant Temperature (ECT) Sensor
G3 – Engine Coolant Temperature (ECT) Gauge
G32 – Engine Coolant Level (ECL) Sensor
H11 – Oil Pressure Warning Buzzer
J220 – Motronic Engine Control Module (ECM)
J248 – Diesel Direct Fuel Injection (DFI) Engine Control Module (ECM)
J285 – Control Module With Display Unit In Instrument Cluster
K3 – Oil Pressure Warning Light
K28 – Engine Coolant Level/Temperature (ECL/ ECT) Warning Light

T28 – 28-Pin Connector, on instrument cluster

119 – Ground connection -1-, in headlight wiring harness

* – Switch levels see Repair Manual Passat 1994 " Engine

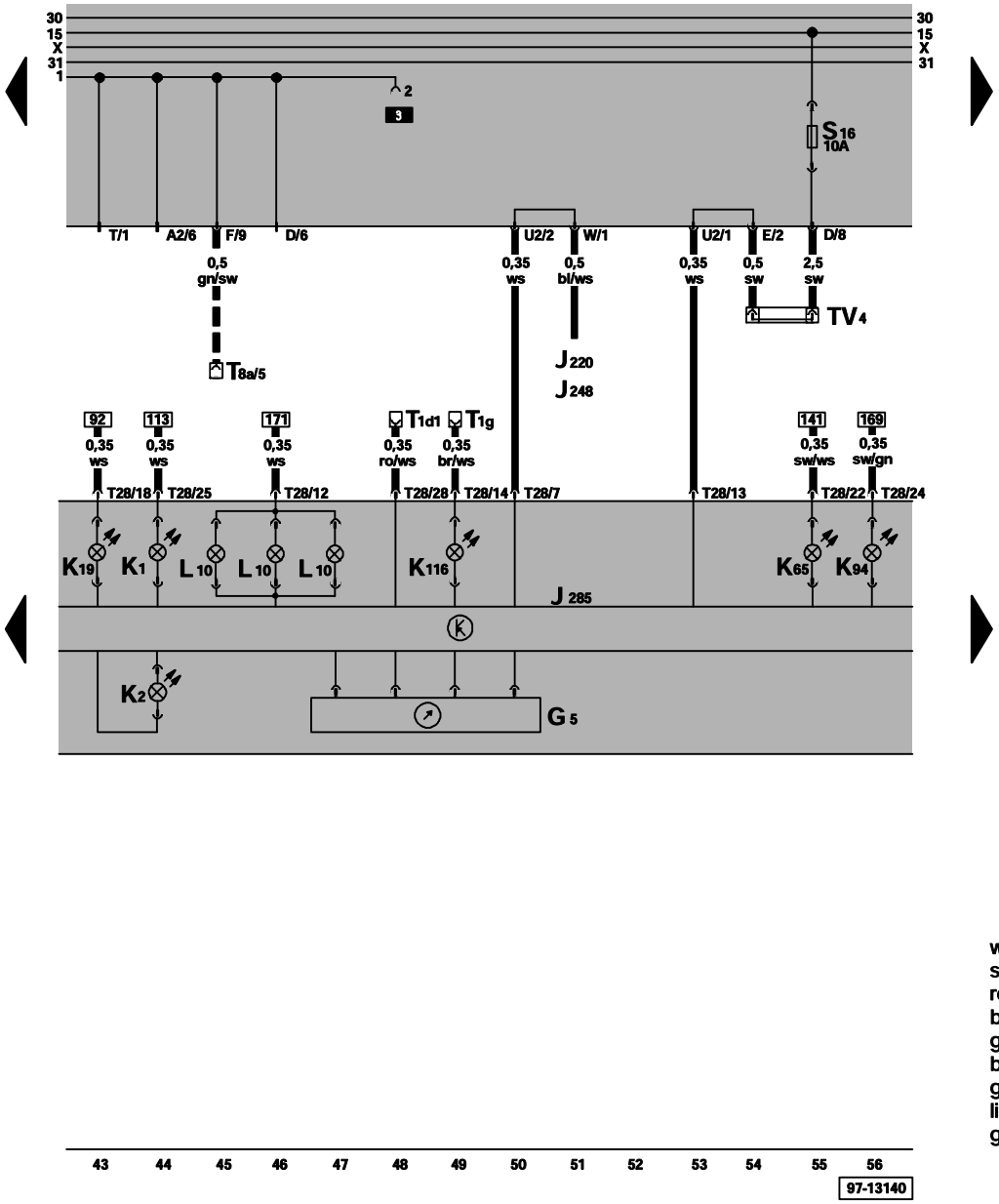

ws = white
sw = black
ro = red
br = brown
gn = green
bl = blue
gr = grey
li = violet
ge = yellow

G5 – Tachometer
J220 – Motronic Engine Control Module (ECM)
J248 – Diesel Direct Fuel Injection (DFI) Engine Control Module (ECM)
J285 – Control Module With Display Unit In Instrument Cluster
K1 – Headlight High Beam Indicator Light
K2 – Generator (GEN) Warning Light
K19 – Seat Belt Warning Light
K65 – Left Turn Signal Indicator Light
K94 – Right Turn Signal Indicator Light
K116 – Warning Light For Rear Lid Unlocked, sedan only
L10 – Instrument Cluster Light
T1d1 – Single Connector, behind fuse/relay panel
T1g – Single Connector, behind fuse/relay panel
T8a – 8-Pin Connector, behind fuse/relay panel
T28 – 28-Pin Connector, on instrument cluster
TV4 – Terminal 15 Wire Connector, above fuse/relay panel

▬▬ – Automatic transmission only

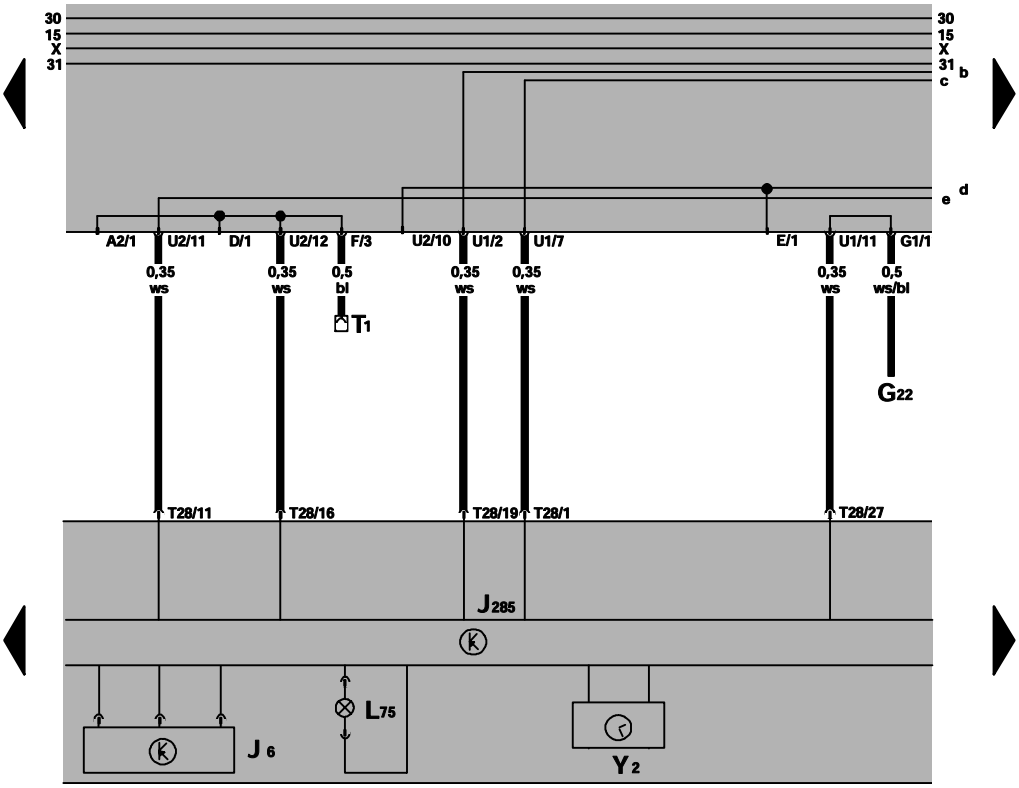

ws = white
sw = black
ro = red
br = brown
gn = green
bl = blue
gr = grey
li = violet
ge = yellow

57 58 59 60 61 62 63 64 65 66 67 68 69 70

97-13141

G22 – Speedometer Vehicle Speed Sensor (VSS) (hall generator, on transmission)
J6 – Voltage Stabilizer
J285 – Control Module With Display Unit In Instrument Cluster
L75 – Digital Display Light
T1 – Single Connector, near starter
T28 – 28-Pin Connector, on instrument cluster
Y2 – Digital clock

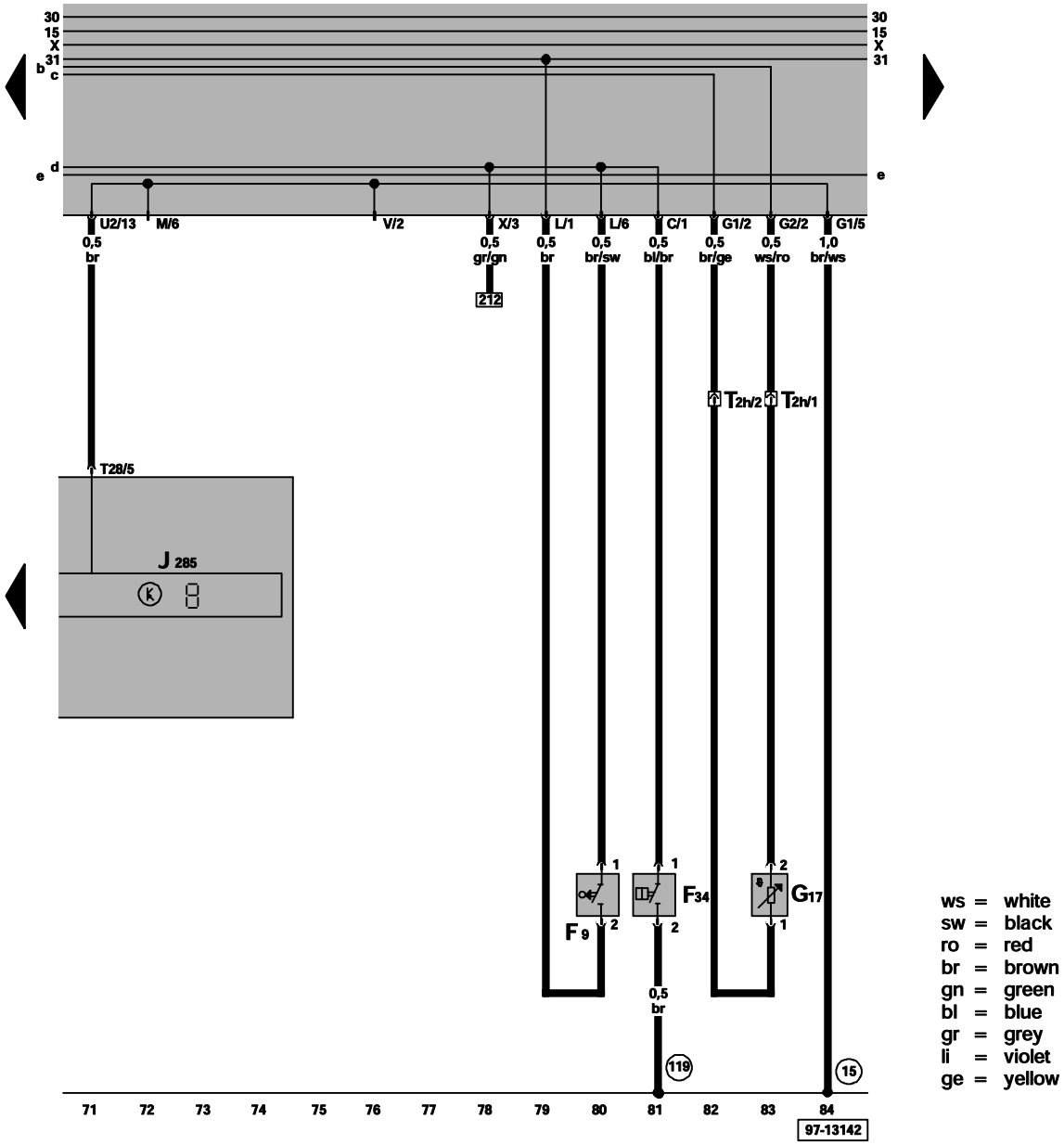

ws = white
sw = black
ro = red
br = brown
gn = green
bl = blue
gr = grey
li = violet
ge = yellow

F9 – Parking Brake Warning Light Switch
F34 – Brake Fluid Level Warning Switch
G17 – Outside Air Temperature Sensor
J285 – Control Module With Display Unit In Instrument Cluster
T2h – Double Connector, in engine compartment, right front
T28 – 28-Pin Connector, on instrument cluster

(15) – Ground connection, on cylinder head

(119) – Ground connection -1-, in headlight wiring harness

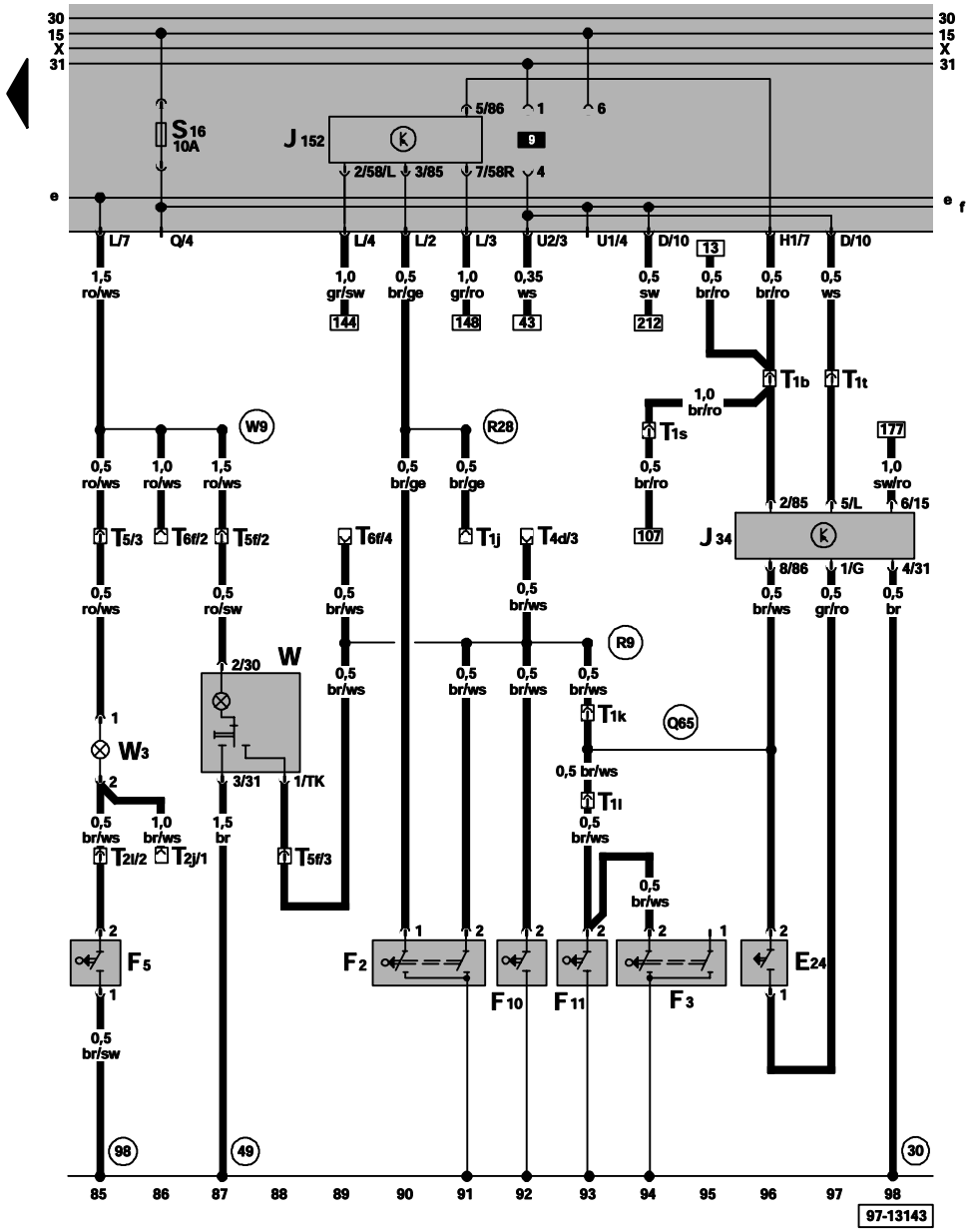

ws = white
sw = black
ro = red
br = brown
gn = green
bl = blue
gr = grey
li = violet
ge = yellow

E24 – Left Seat Belt Switch
F2 – Left Front Door Contact Switch
F3 – Right Front Door Contact Switch
F5 – Luggage Compartment Light Switch
F10 – Left Rear Door Contact Switch
F11 – Right Rear Door Contact Switch
J34 – Seat Belt Warning System Relay
J152 – Radio/Parking Light Warning Buzzer
T1b – Single Connector, behind fuse/relay panel
T1j – Single Connector
T1k – Single Connector, in luggage compartment
T1l – Single Connector, behind fuse/relay panel
T1s – Single Connector
T1t – Single Connector, behind fuse/relay panel
T2j – Double Connector, behind fuse/relay panel
T2l – Double Connector
T4d – 4-Pin Connector, below rear seat bench
T5 – 5-Pin Connector, in luggage compartment, left
T5f – 5-Pin Connector, on left A-pillar, near relay panel
T6f – 6-Pin Connector, behind fuse/relay panel
W – Front Interior Light
W3 – Luggage Compartment Light

30 – Ground connection, -1-, beside fuse/relay panel
49 – Ground connection , near interior light
98 – Ground connection, in rear lid wiring harness
Q65 – Wire connection, in seat belt warning system wiring harness
R9 – Wire connection (door contact switch), in rear door wiring harness
R28 – Wire connection -2- (door contact switch), in rear wiring harness
W9 – Plus connection (30), in rear wiring harness

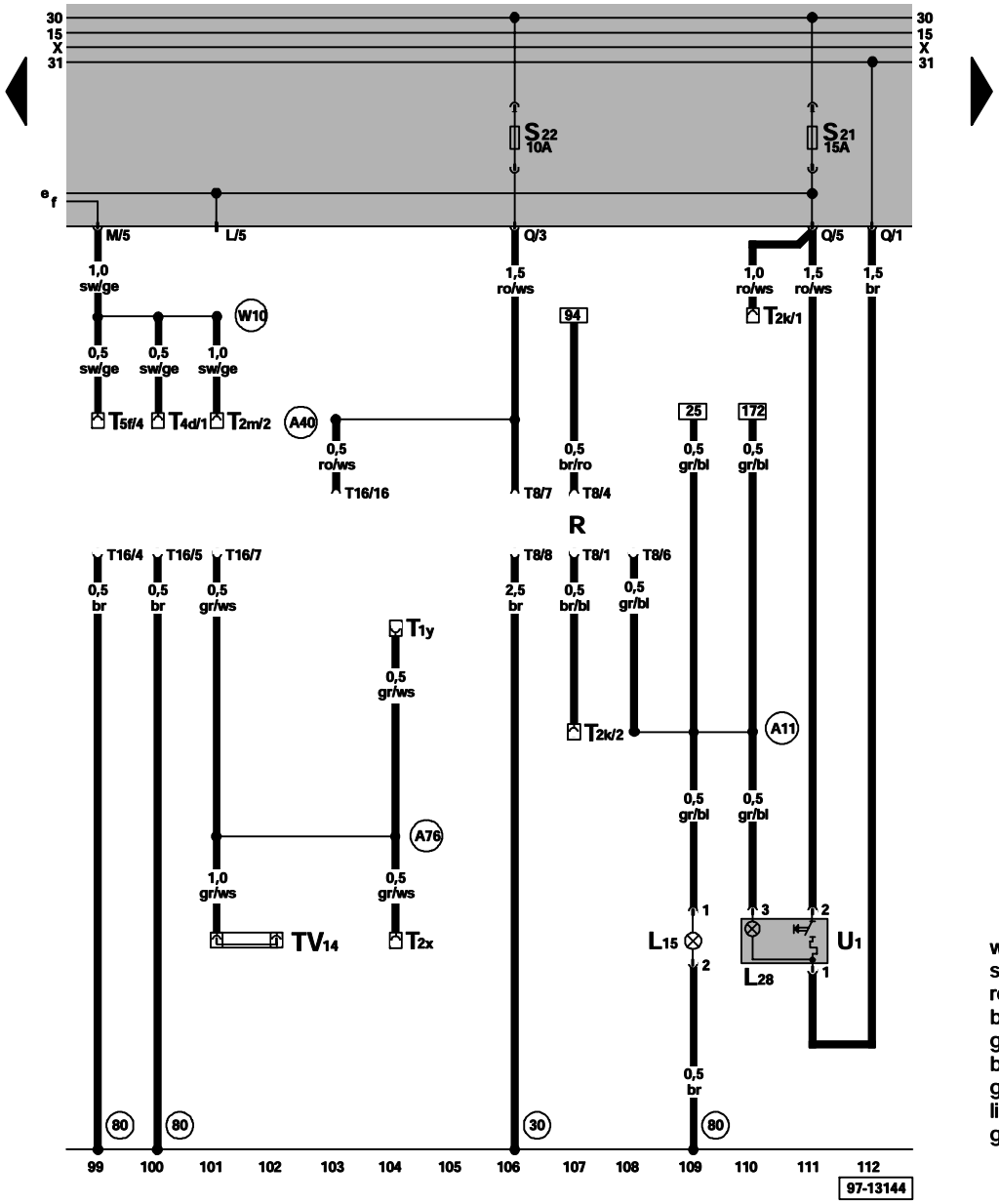

ws = white
sw = black
ro = red
br = brown
gn = green
bl = blue
gr = grey
li = violet
ge = yellow

L15 – Ashtray Light
L28 – Cigarette Lighter Light
R – Radio
T1y – Single Connector, behind fuse/relay panel
T2k – Double Connector, behind fuse/relay panel
T2m – Double Connector, behind fuse/relay panel
T2x – Double Connector, behind fuse/relay panel, On Board Diagnostic (OBD) connection, engine
T4d – 4-Pin Connector, below rear seat bench
T5f – 5-Pin Connector, on left A-pillar, near fuse/relay panel
T8 – 8-Pin Connector, on radio
TV14 – Data Link Connector (DLC) Wire Connector, above fuse/relay panel
T16 – 16-Pin Connector, On Board Diagnostic (OBD), beside Ignition/Starter Switch
U1 – Cigarette Lighter

30 – Ground connection, -1-, beside fuse/relay panel
80 – Ground connection -1-, in instrument panel wiring harness
A11 – Plus connection (58b) in instrument panel wiring harness
A40 – Plus connection (30), in instrument panel wiring harness
A76 – Connector (K-diagnosis wire), in instrument panel wiring harness
W10 – Plus connection (15), in rear wiring harness

ata lin connector C wire connector, radio connection, cigarette lig ter, as tray lig t

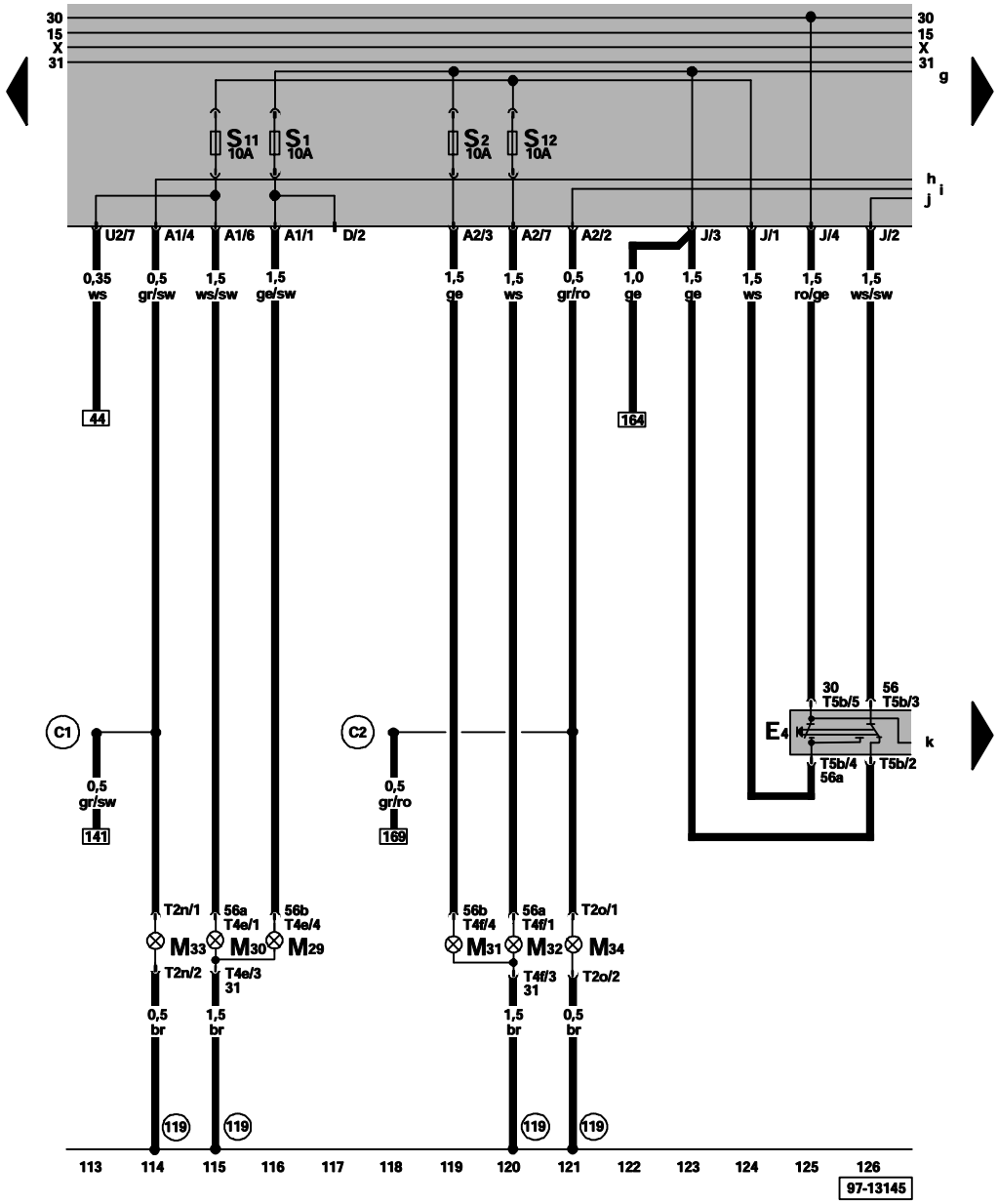

ws = white
sw = black
ro = red
br = brown
gn = green
bl = blue
gr = grey
li = violet
ge = yellow

E4 – Headlight Dimmer/Flasher Switch
M29 – Left Low Beam Headlight
M30 – Left High Beam Headlight
M31 – Right Low Beam Headlight
M32 – Right High Beam Headlight
M33 – Left Front Side Marker Light
M34 – Right Front Side Marker Light
T2n – Double Connector
T2o – Double Connector
T4e – 4-Pin Connector
T4f – 4-Pin Connector
T5b – 5-Pin Connector, behind steering column switch cover

(119) – Ground connection -1-, in headlight wiring harness

(C1) – Plus connection (58L), in left front wiring harness

(C2) – Plus connection (58R), in left front wiring harness

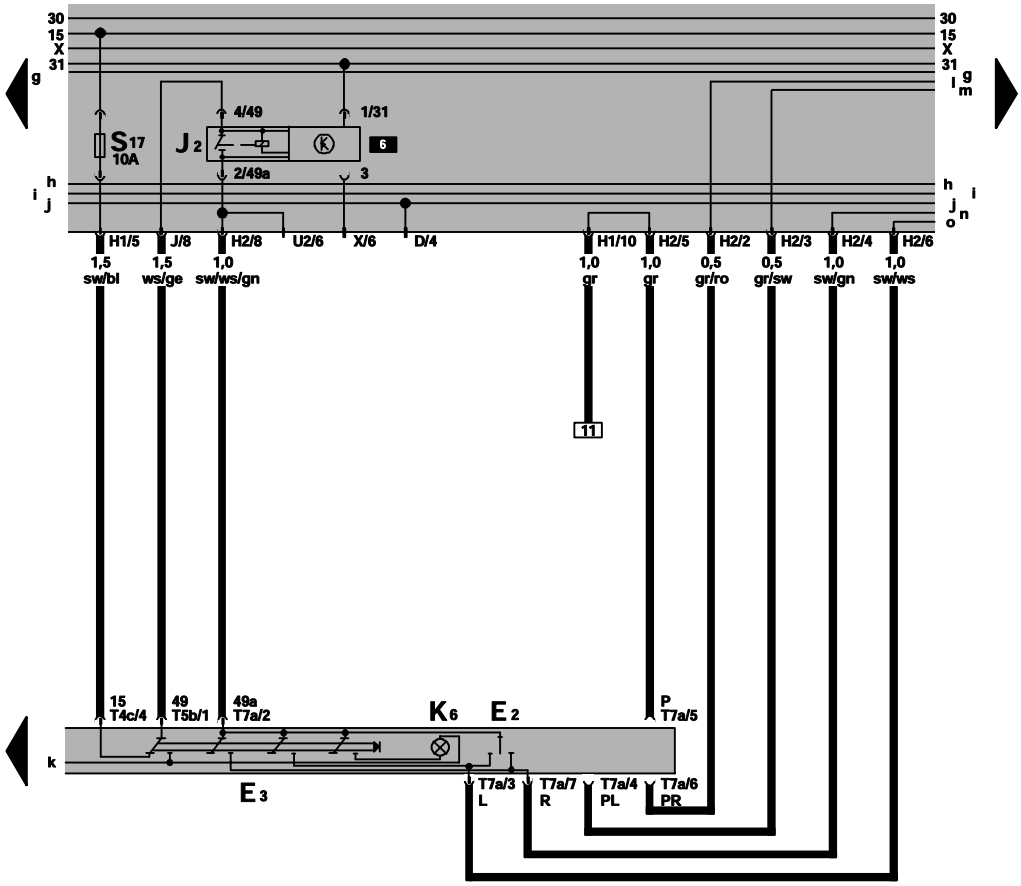

ws = white
sw = black
ro = red
br = brown
gn = green
bl = blue
gr = grey
li = violet
ge = yellow

127 128 129 130 131 132 133 134 135 136 137 138 139 140

97-13146

E2 - Turn Signal Switch
E3 - Emergency Flasher Switch
J2 - Emergency Flasher Relay
K6 - Emergency Flasher Warning Light
T4c - 4-Pin Connector, behind steering column switch cover
T5b - 5-Pin Connector, behind steering column switch cover
T7a - 7-Pin Connector, behind steering column switch cover

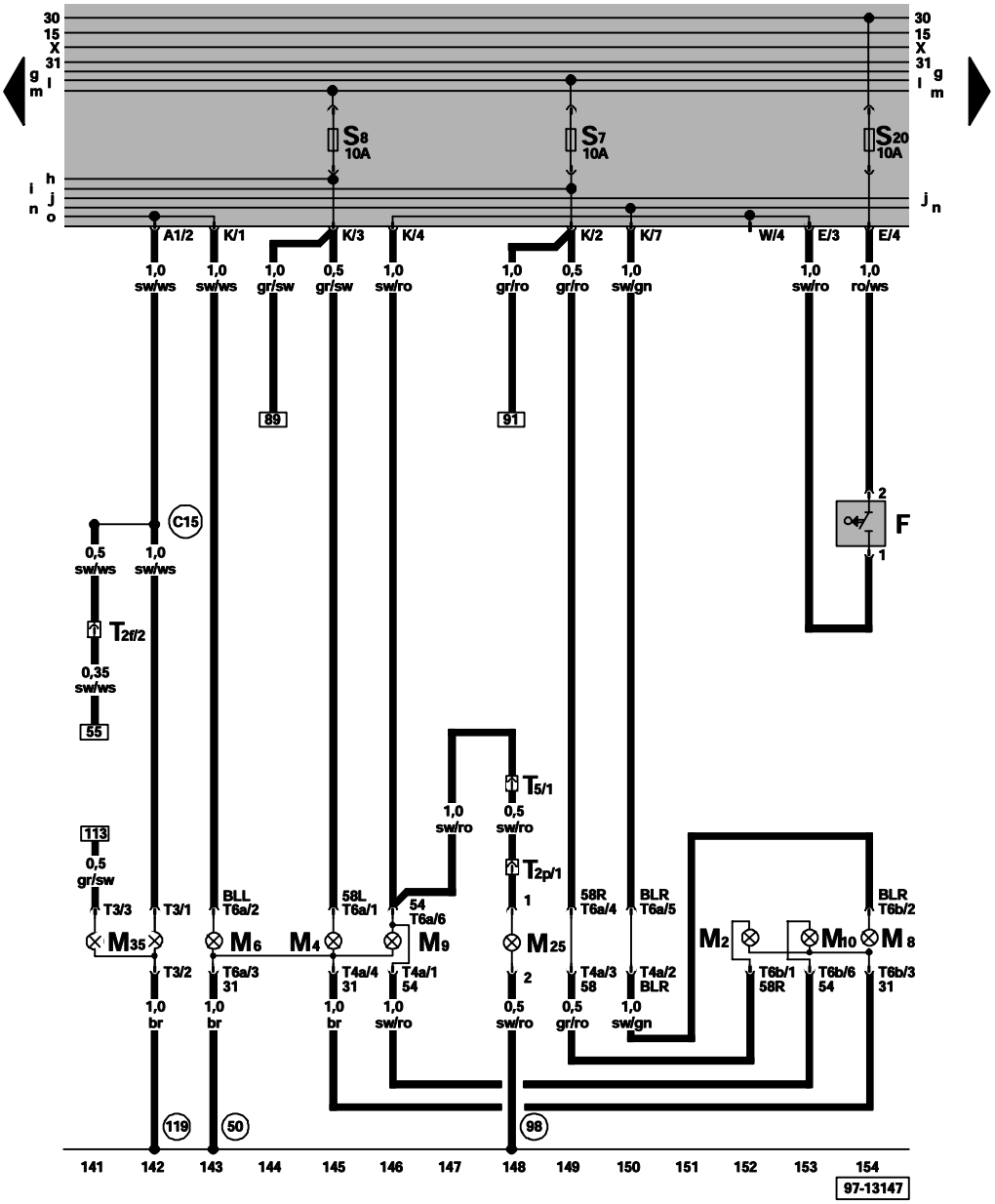

ws = white
sw = black
ro = red
br = brown
gn = green
bl = blue
gr = grey
li = violet
ge = yellow

F – Brake Light Switch
M2 – Right Tail Light
M4 – Left Tail Light
M6 – Left Rear Turn Signal Light
M8 – Right Rear Turn Signal Light
M9 – Left Brake Light
M10 – Right Brake Light
M25 – High-Mount Brake Light
M35 – Light for Turn Signal and Side Marker, Front Left
T2p – Double Connector, in rear lid
T2f – Double Connector, behind fuse/relay panel
T3 – 3-Pin Connector
T4a – 4-Pin Connector, on tail light, left
T5 – 5-Pin Connector, in luggage compartment, left
T6a – 6-Pin Connector, on tail light, left
T6b – 6-Pin Connector, on tail light, right
(50) – Ground connection, in luggage compart ment, left
(98) – Ground connection, in rear lid wiring harness
(119) – Ground connection -1-, in headlight wiring harness
(C15) – Wire connection -1-, in headlight wiring harness

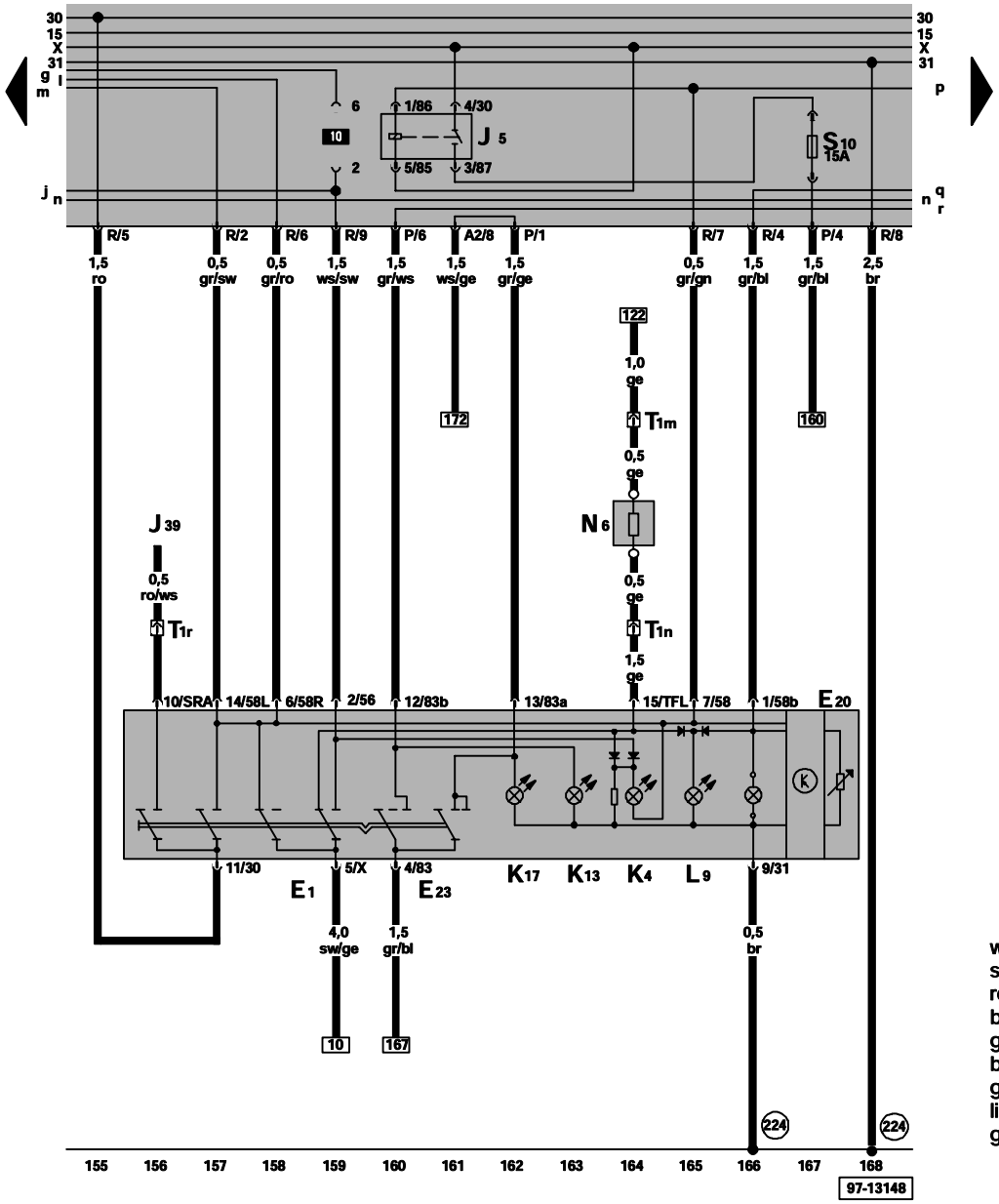

ws = white
sw = black
ro = red
br = brown
gn = green
bl = blue
gr = grey
li = violet
ge = yellow

E1 – Light Switch
E20 – Instrument Panel Light Dimmer Switch
E23 – Fog Light Switch
J5 – Fog Light Relay
J39 – Headlight Washer System Relay
K4 – Park Light Indicator Light
K13 – Rear Fog Light Indicator Light
K17 – Fog Light Indicator Light
L9 – Headlight Switch Light
N6 – Series Resistance
T1m – Single Connector, behind fuse/relay panel
T1n – Single Connector, behind fuse/relay panel
T1r – Single Connector, behind fuse/relay panel

224 – Ground connection, in light switch wiring harness

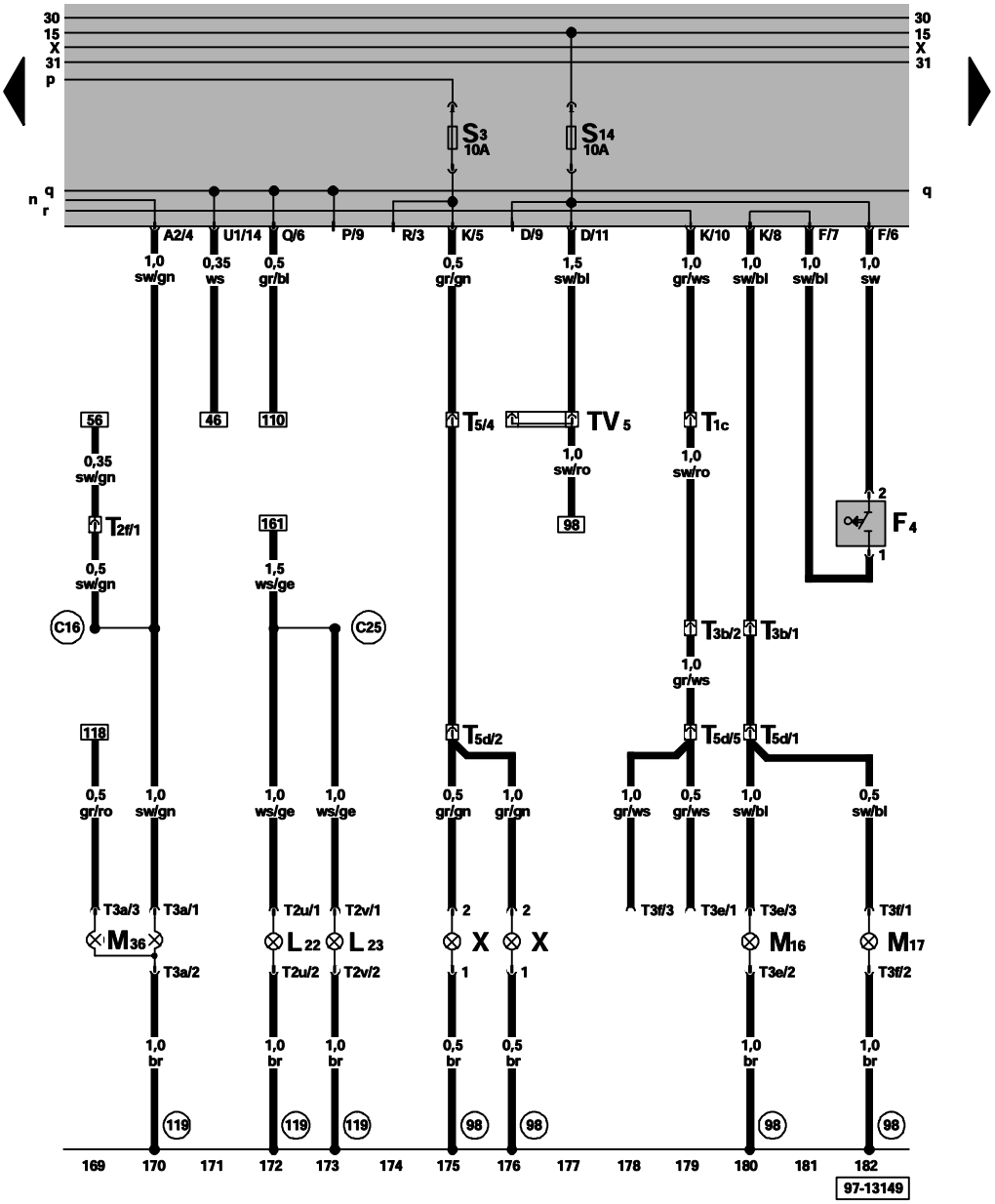

ws = white
sw = black
ro = red
br = brown
gn = green
bl = blue
gr = grey
li = violet
ge = yellow

F4 – Back-Up Light Switch
L22 – Left Front Fog Light
L23 – Right Front Fog Light
M16 – Left Back-Up Light
M17 – Right Back-Up Light
M36 – Light for Turn Signal and Side Marker, Front Right
T1c – Single Connector, in luggage compartment, left
T2f – Double Connector, behind fuse/relay panel
T2u – Double Connector
T2v – Double Connector
T3a – 3-Pin Connector
T3b – 3-Pin Connector, in luggage compartment, left
T3e – 3-Pin Connector
T3f – 3-Pin Connector
T5 – 5-Pin Connector, in rear lid
T5d – 5-Pin Connector, in luggage compartment, left
TV5 – Terminal 15a Wire Connector, above fuse/relay panel
X – License Plate Light
98 – Ground connection, in rear lid wiring harness
119 – Ground connection -1-, in headlight wiring harness
C16 – Wire connection -2-, in headlight wiring harness
C25 – Wire connection (fog lights), in front light wiring harness

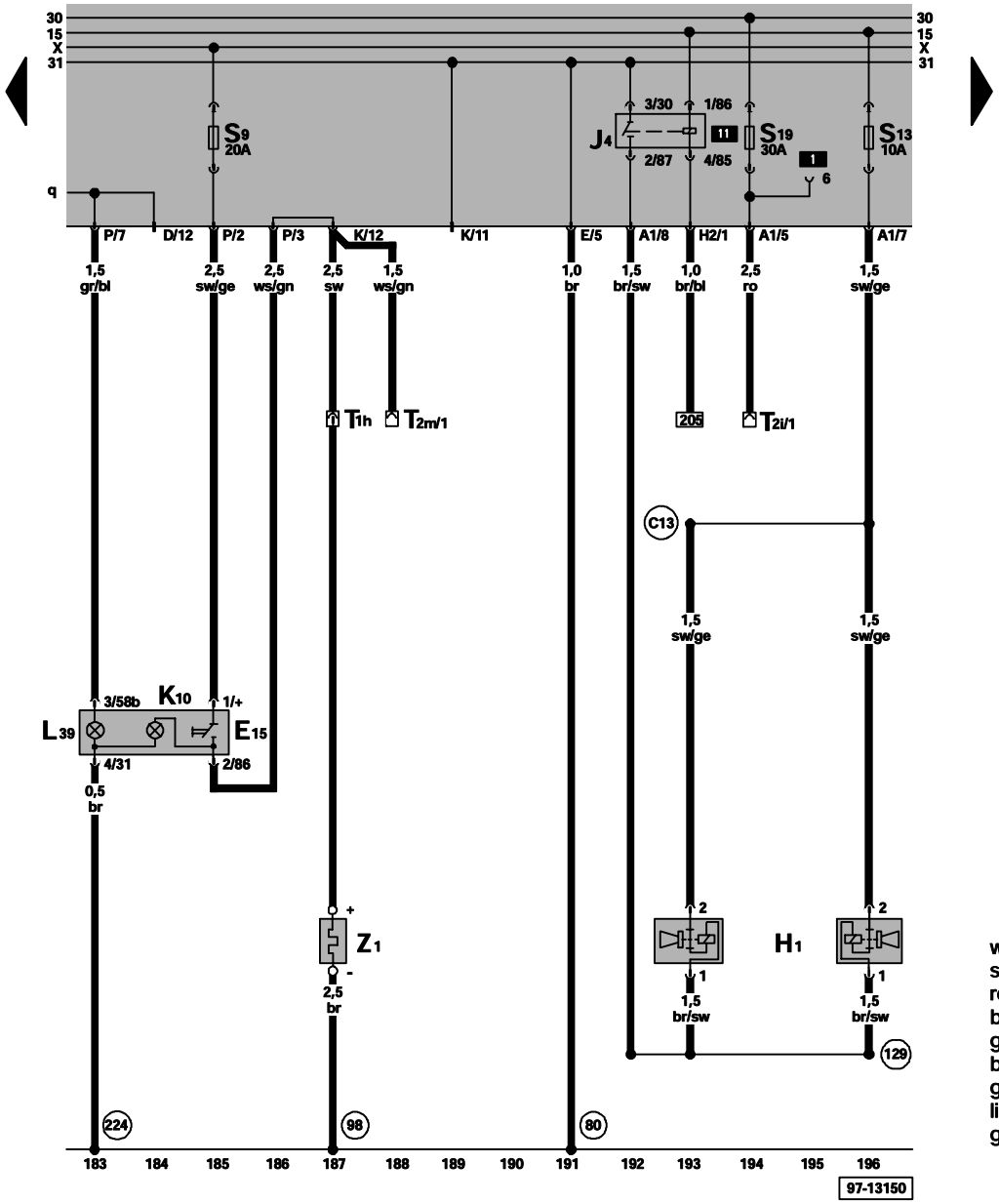

ws = white
sw = black
ro = red
br = brown
gn = green
bl = blue
gr = grey
li = violet
ge = yellow

E15 – Rear Window Defogger Switch
H1 – Dual Horns
J4 – Dual Horn Relay
K10 – Rear Window Defogger Indicator Light
L39 – Rear Window Defogger Switch Light
T1h – Single Connector, in luggage compartment, left
T2i – Double Connector, behind fuse/relay panel
T2m – Double Connector, behind fuse/relay panel
Z1 – Rear Window Defogger/Heat Element

(80) – Ground connection -1-, in instrument panel wiring harness

(98) – Ground connection, in rear lid wiring harness

(129) – Ground connection, in dual-tone horn wiring harness

(224) – Ground connection, in light switch wiring harness

(C13) – Plus connection, in dual tone horn wiring harness

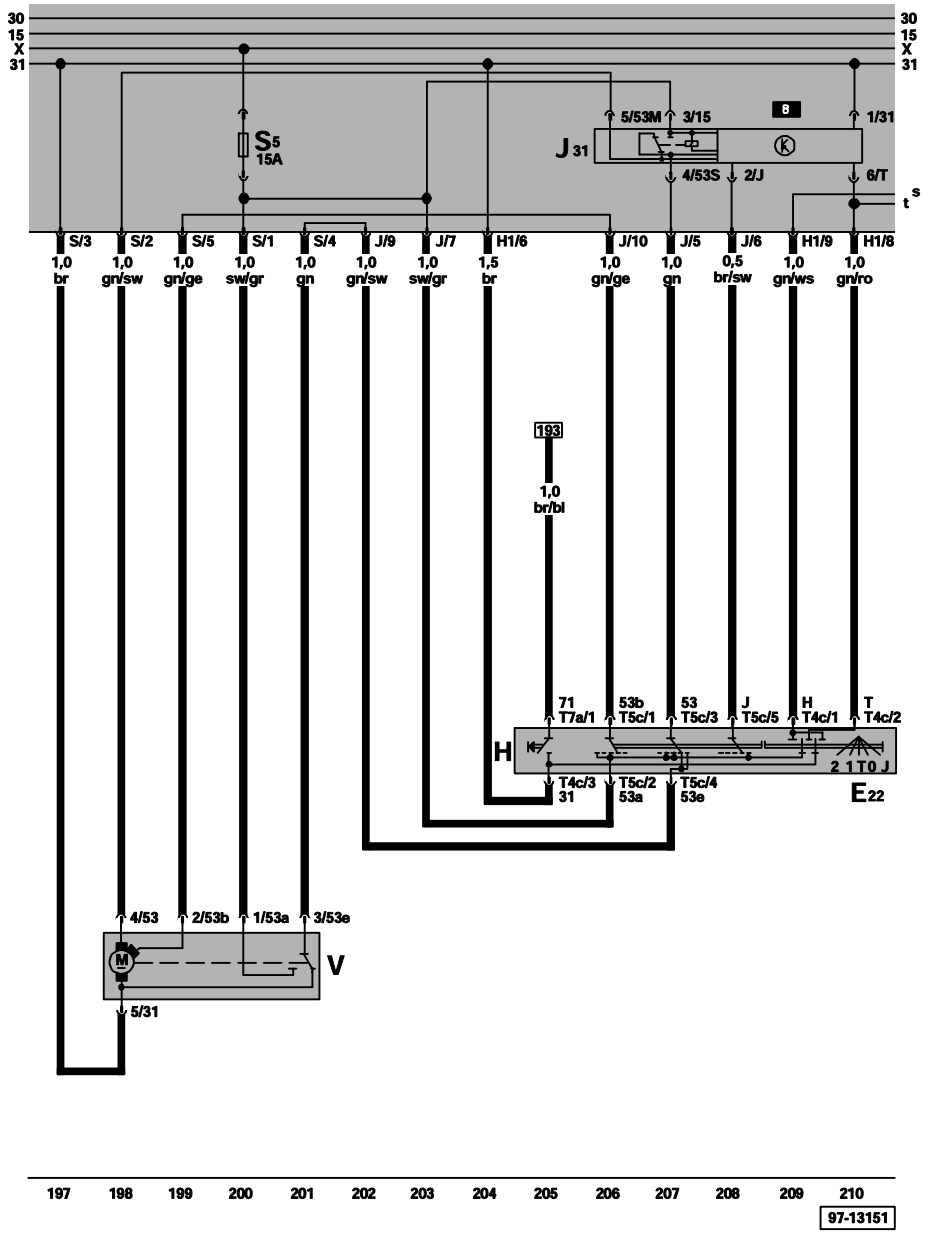

ws = white
sw = black
ro = red
br = brown
gn = green
bl = blue
gr = grey
li = violet
ge = yellow

E22 – Windshield Wiper/Washer Switch
H – Horn button
J31 – Wiper/Washer Intermittent Relay
T4c – 4-Pin Connector, behind steering column switch cover
T5c – 5-Pin Connector, behind steering column switch cover
T7a – 7-Pin Connector, behind steering column switch cover
V – Windshield Wiper Motor

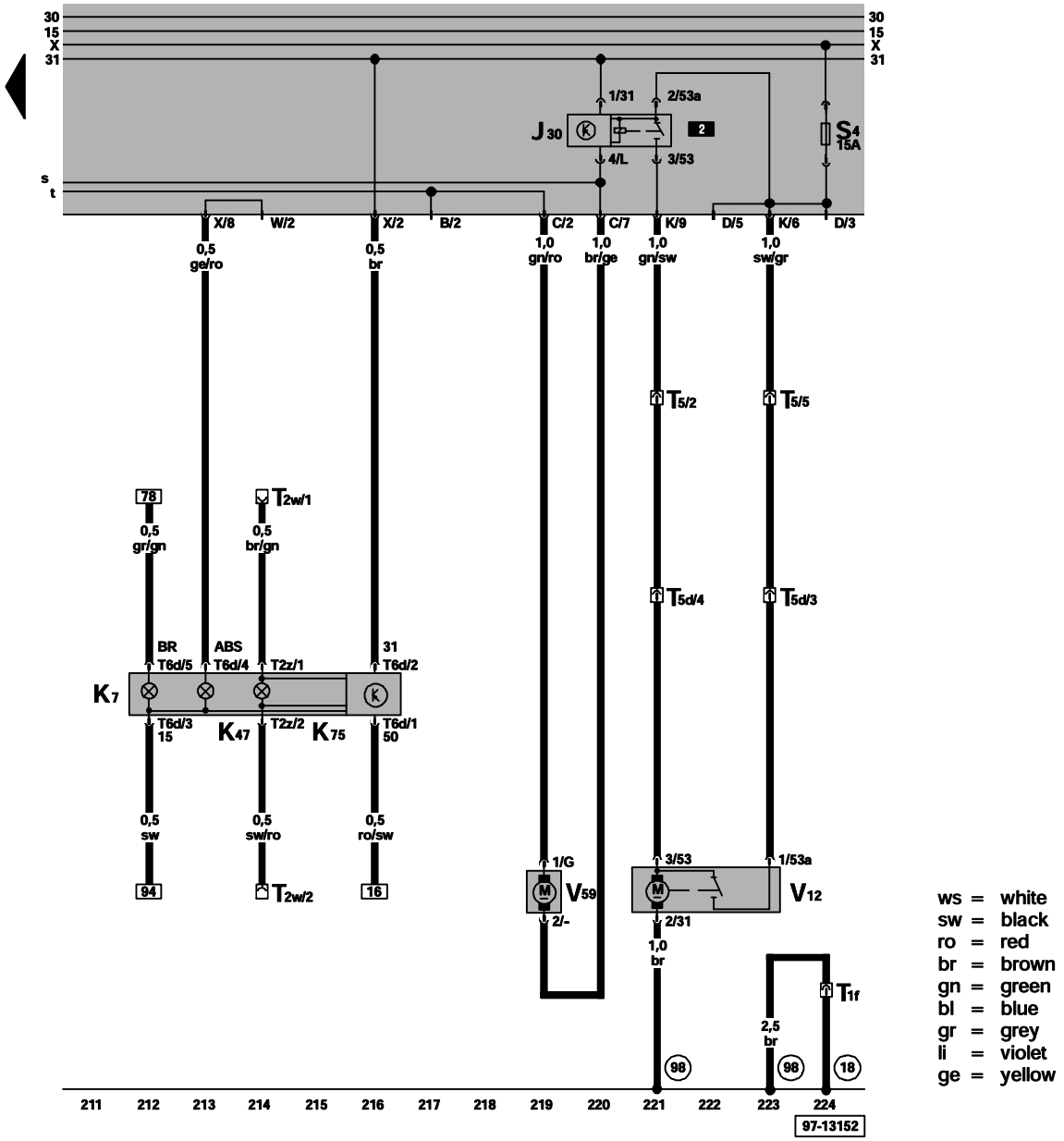

J30 – Rear Window Wiper/Washer Relay
K7 – Brake and Parking Brake Warning Light
K47 – ABS Warning Light
K75 – Airbag Warning Light
T1f – Single Connector, in rear lid
T2w – Double Connector, behind fuse/relay panel
T2z – Double Connector
T5 – 5-Pin Connector, in luggage compartment, left
T5d – 5-Pin Connector, in rear lid
T6d – 6-Pin Connector
V12 – Rear Window Wiper Motor
V59 – Windshield and Rear Window Washer Pump

(18) – Ground connection, on engine block
(98) – Ground connection, in rear lid wiring harness

Air-Conditioning,

from December 1995

● 1,9 L-Engine–Turbo Diesel Fuel Injection (DFI) / 66 kW, code 1Z,

Relay location

For relay locations and multiple connectors see section "component locations"

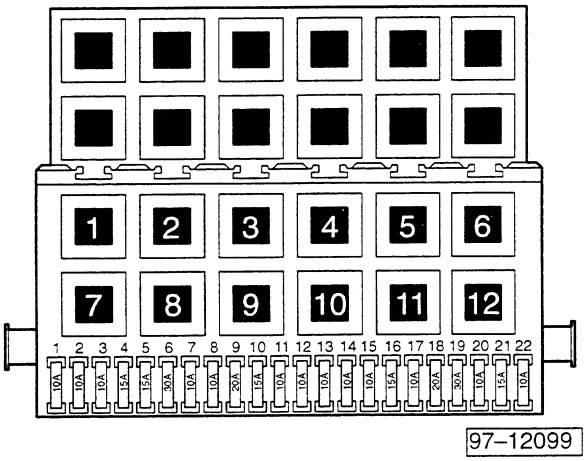

Fuse colors

30 A – green
25 A – white
20 A – yellow
15 A – blue
10 A – red
7,5 A – brown
5 A – beige
3 A – violet

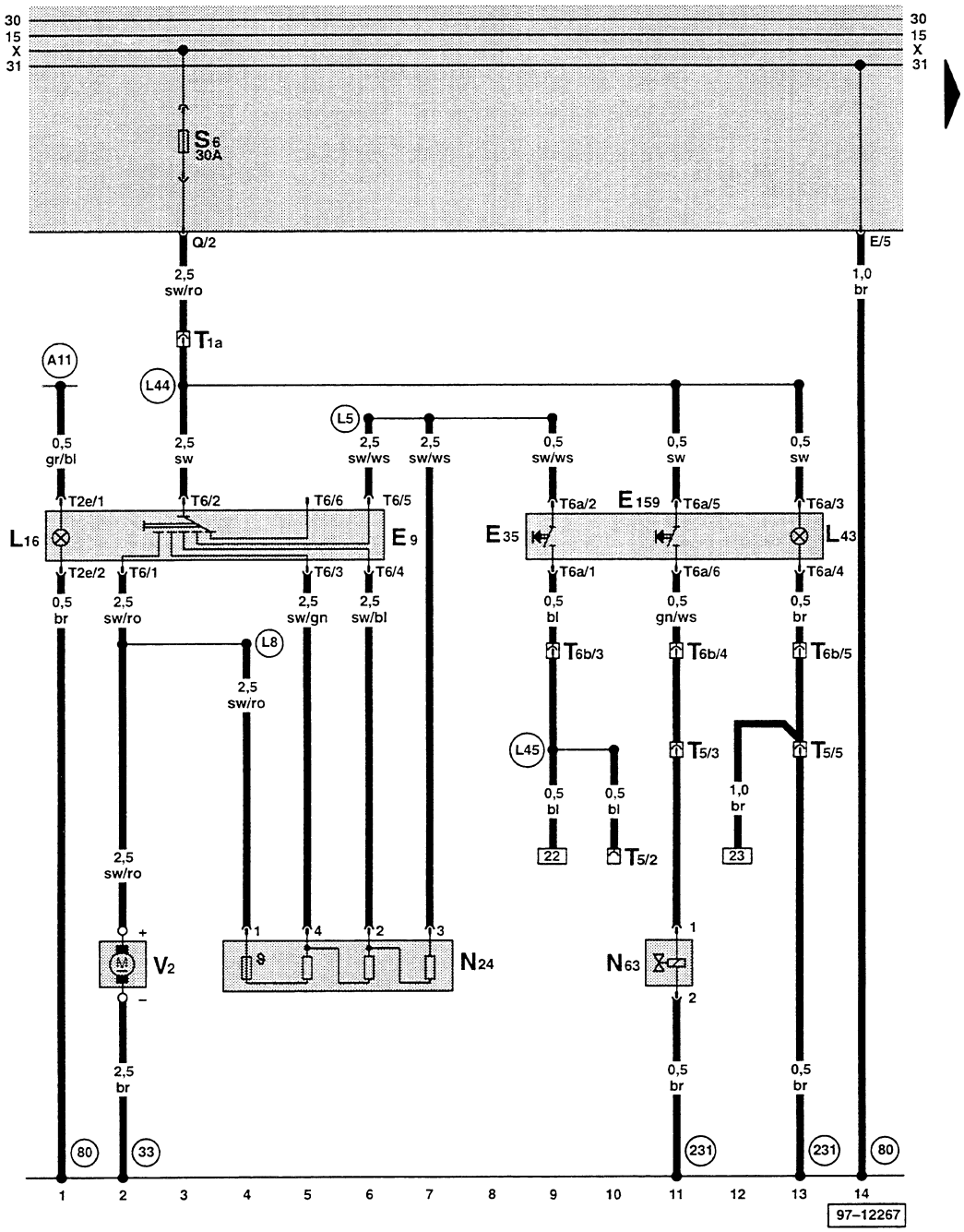

ws = white
sw = black
ro = red
br = brown
gn = green
bl = blue
gr = grey
li = violet
ge = yellow

E9 – Fresh Air Blower Switch
E35 – A/C Switch
E159 – Fresh Air /Recirculating Flap Switch
L16 _ Fresh Air Control Lever Light
L43 – A/C Switch Illumination Light
N24 – Fresh Air Blower Series Resistance with Fuse
N63 – Fresh Air/Recirculating Flap Two–Way Valve
T1a – Single Connector, behind the fuse/relay panel
T2e – Double Connector
T5 – 5-Pin Connector, behind the fuse/relay panel, housing 2 is not connected
T6 – 6-Pin Connector
T6a – 6-Pin Connector
T6b – 6-Pin Connector, behind the fuse/relay panel, middle
V2 – Fresh Air Blower

(33) – Ground connection, behind instrument panel, right
(80) – Ground connection -1-, in instrument panel wiring harness
(231) – Ground connection, in A/C system-coolant fan wiring harness
(A11) – Plus connection (58b) in instrument panel wiring harness
(L5) – Wire Connection -1-, in evaporator housing wiring harness
(L8) – Wire Connection -4-, in evaporator housing wiring harness
(L44) – Wire Connection (X), in A/C system wiring harness
(L45) – Wire Connection , in A/C system wiring harness

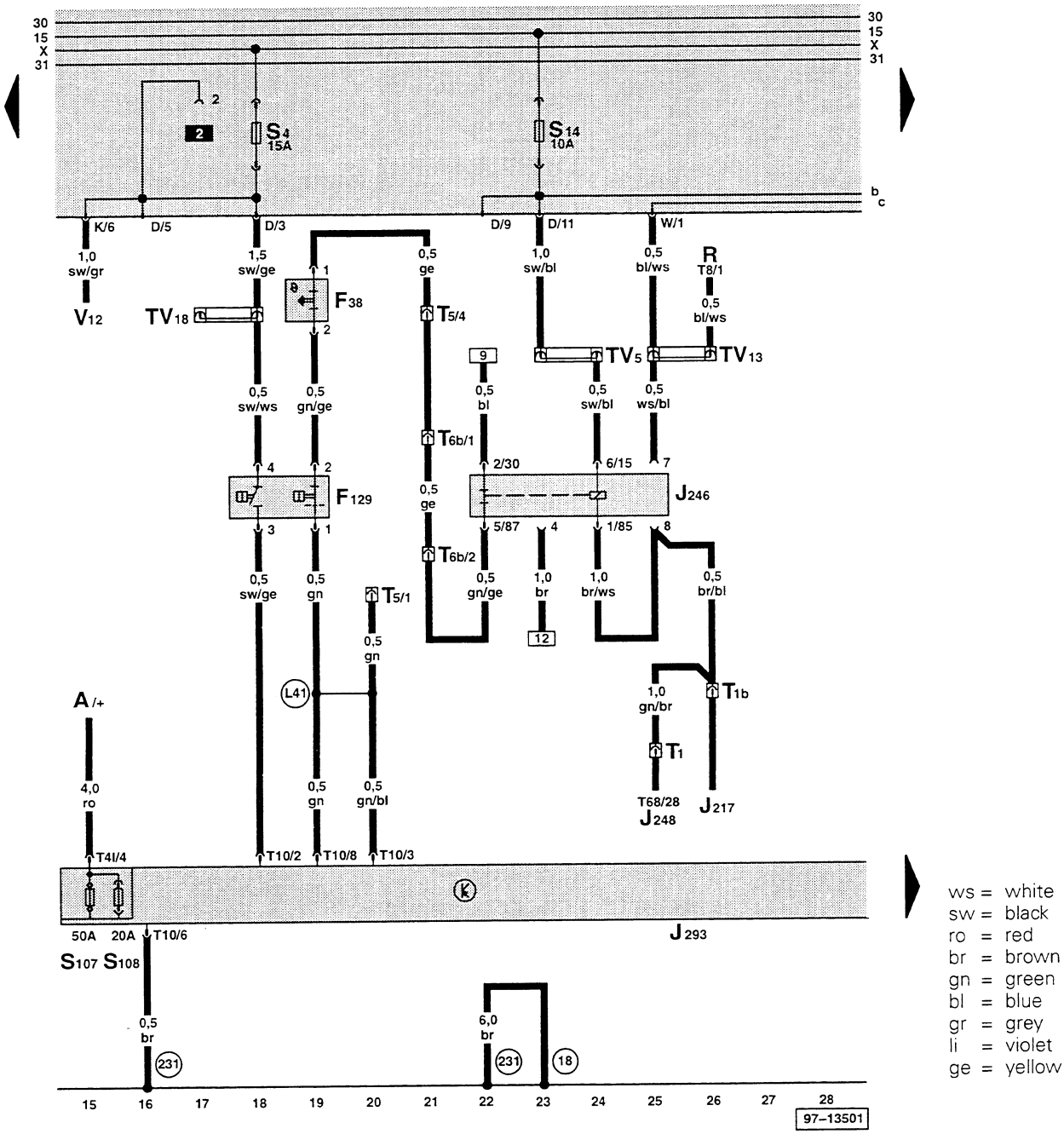

ws = white
sw = black
ro = red
br = brown
gn = green
bl = blue
gr = grey
li = violet
ge = yellow

A – Battery
F38 – Ambient Temperature Switch, in the plenum chamber, right
F129 – A/C Pressure Switch
J217 – Transmission Control Module (TCM)
J246 – A/C Clutch Cut–Off Relay, behind the middle-console, production control number (135)
J248 – Diesel Direct Fuel Injection (DFI) Engine Control Module (ECM), connector T68/28 at T1
J293 – Coolant FC (Fan Control) Control Module, in engine compartment, left
R – Radio
S107 – Coolant Fan Second and Third Speed Fuse
S108 – Coolant Fan First Speed and A/C Clutch Fuse
T1 – Single Connector, behind the fuse/relay panel
T1b – Single Connector, behind the fuse/relay panel
T4l – 4-Pin Connector
T5 – 5-Pin Connector, behind the fuse/relay panel
T6b – 6-Pin Connector, behind the instrument panel, middle
T10 – 10-Pin Connector
TV5 – Terminal 15a Wire Connector, above the fuse/relay panel
TV13 – Vehicle Speed Signal Wire Connector, above the fuse/relay panel
TV18 – Distributor for terminal Xa, above the fuse/relay panel
V12 – Rear Window Wiper Motor

(18) – Ground connection, on engine block
(231) – Ground connection, in A/C system–coolant fan wiring harness
(L41) – Wire connection (A/C on), in A/C system–coolant fan wiring harness

A/C Pressure Switch, ambient temperature switch, coolant FC (Fan Control) control module, A/C shut off

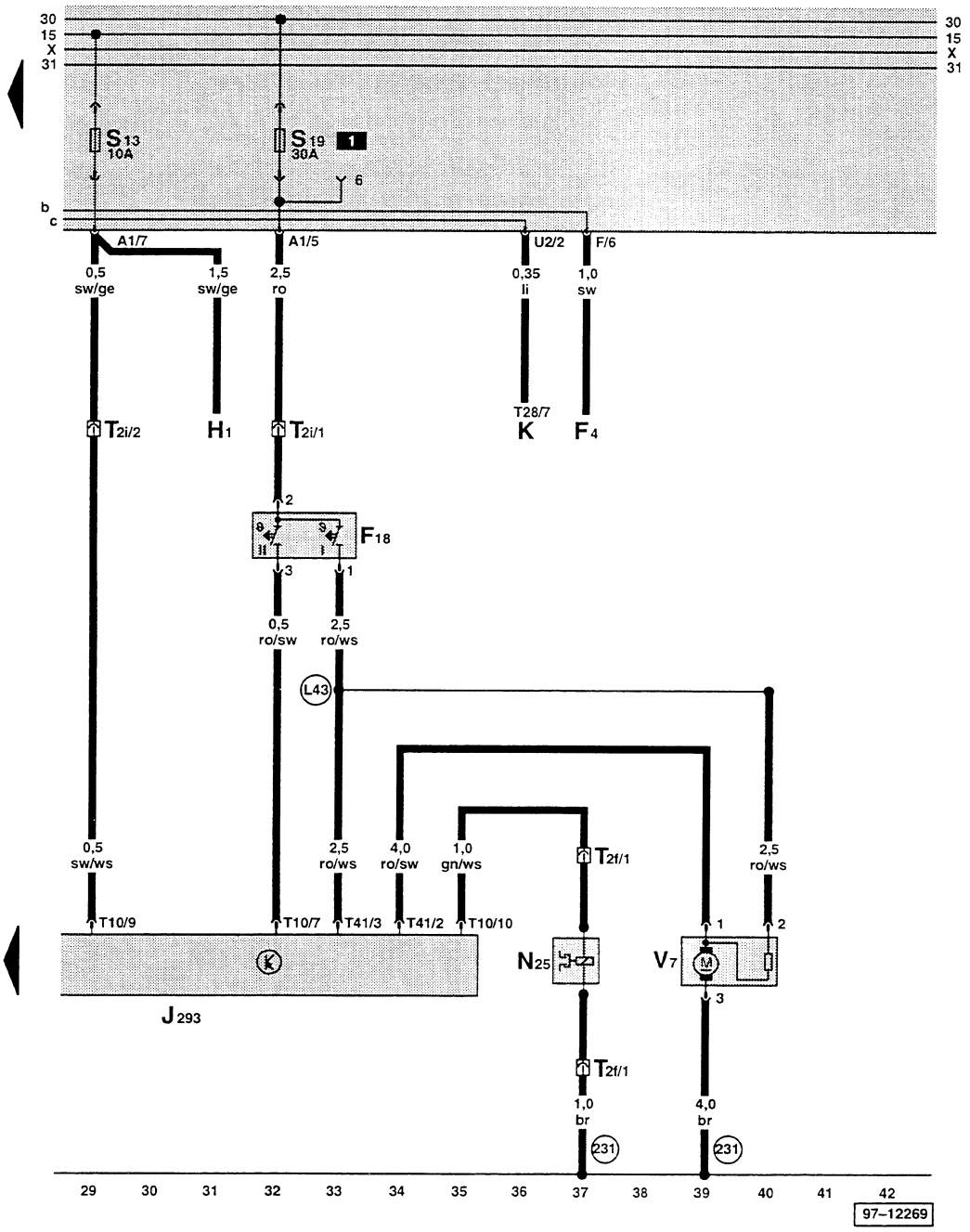

ws = white
sw = black
ro = red
br = brown
gn = green
bl = blue
gr = grey
li = violet
ge = yellow

F4 – Back-Up Light Switch
F18 – Coolant Fan Control (FC) Thermal Switch
H1 – Dual Horns
J293 – Coolant FC (Fan Control) Control Module, in engine compartment, left
K – Instrument Cluster
N25 – A/C Clutch
T2f – Double Connector, near compressor
T2i – Double Connector, behind the fuse/relay panel
T4l – 4-Pin Connector
T10 – 10-Pin Connector
T28 – 28-Pin Connector, on instrument cluster
V7 – Coolant Fan

(231) – Ground connection, in A/C system-coolant fan wiring harness
(L43) – Wire connection (coolant fan), in A/C system-coolant fan wiring harness

Volkswagen Passat

Official Factory Repair Manual

1995
Gasoline, Turbo Diesel, TDI
4-cylinder and VR6, including wagon

Robert Bentley

PASSAT '95 - '97

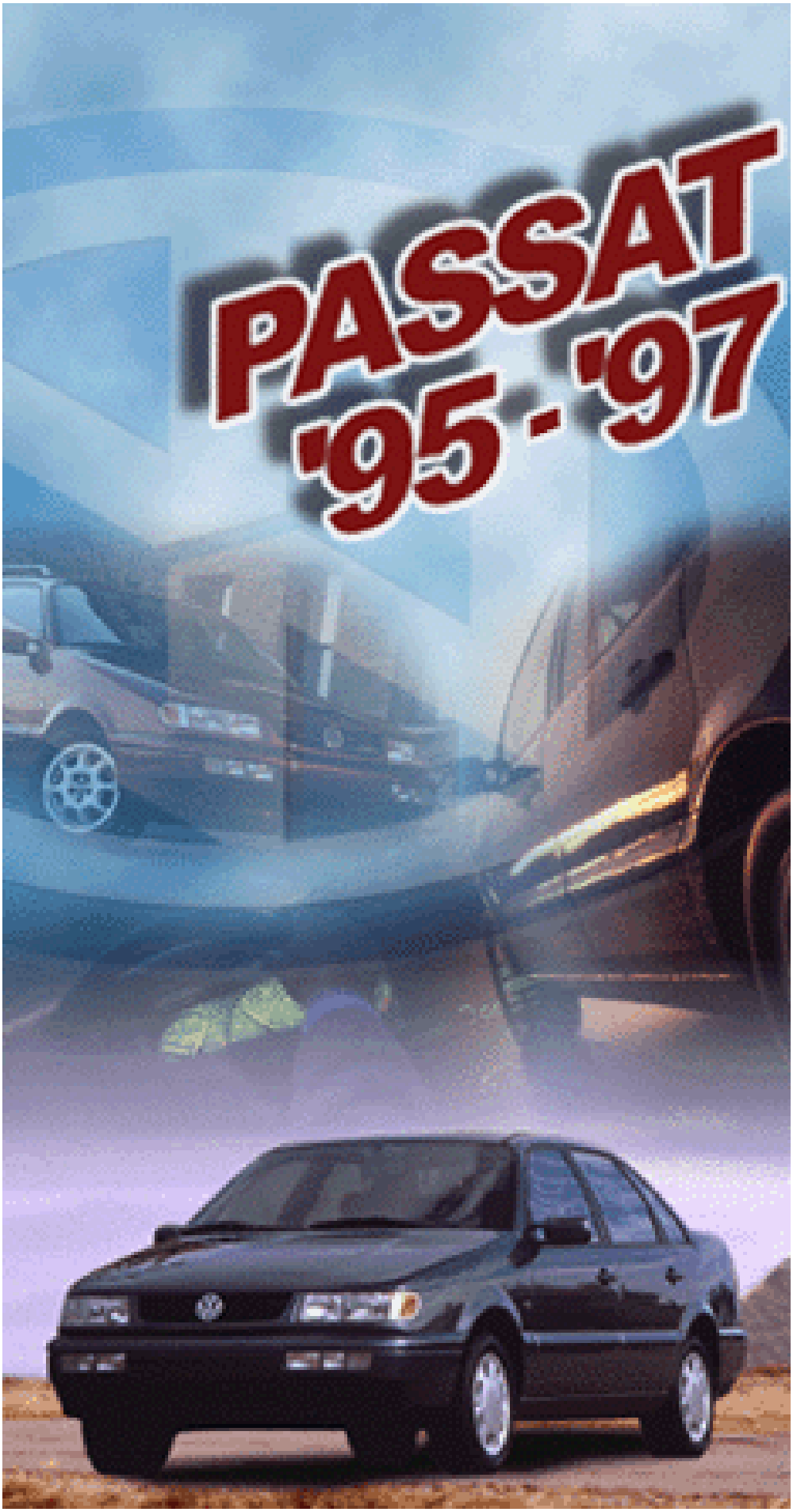

2.0 Liter 4-Cyl. 2V Engine Mechanical, Engine Code(s): ABA m.y. 1995

00 - General, Technical data

Technical data
Engine numbers, location
Engine technical data

10 - Engine - Assembly

Engine, removing and installing
Removing
Installing
Tightening torques
Engine and transmission, aligning
Rubber bushings for engine mount, replacing
Vehicles with A/C, additional information on removing and installing

13 - Engine - Crankshaft, Cylinder block

Engine disassembling and assembling
Ribbed drive belt, removing and installing
Toothed drive belt, removing and installing

Sealing flange and flywheel or drive plate, removing and installing
Crankshaft oil seal (pulley end), replacing
Drive plate, removing and installing

Crankshaft, removing and installing
Crankshaft dimensions

Pistons and connecting rods, disassembling and assembling
Piston and cylinder dimensions

15 - Engine - Cylinder head, Valvetrain

Cylinder head removal and installation
Cylinder head, installing
Compression pressure, checking

Cylinder head, disassembling and assembling
Valve seats, refacing
Camshaft oil seal, removing and installing
Camshaft, removing and installing
Hydraulic valve lifters, checking
Valve guide wear, checking

Valve guides, removing and replacing
Valve stem seals, replacing

17 - Engine - Lubrication

Lubrication system, general information
Lubrication system, components
Oil pressure and oil pressure switches, checking

19 - Engine - Cooling system

Cooling system
General information
Cooling system components, body side
Cooling system components, engine side
Coolant pump, disassembling and assembling
Cooling system, draining and filling
Radiator and coolant fan, removing and installing

20 - Fuel Supply

Fuel supply system
General information
Fuel filter and fuel tank with attaching parts, removing and installing
Safety precautions
Rules of cleanliness
Accelerator pedal cable, adjusting
Fuel pump module, removing and installing
Fuel pump, checking
Fuel pump delivery rate, checking

Evaporative Emissions (EVAP) system
Components, removing and installing
Fuel tank breather, checking

26 - Exhaust system, Emission controls

Exhaust system removal and installation
Exhaust manifold, front exhaust pipe and Three Way Catalytic Converter (TWC), removing and installing
Muffler assembly and mounts

Exhaust Gas Recirculation (EGR) system
Exhaust Gas Recirculation (EGR) valve and EGR temperature sensor, checking

Secondary Air Injection (AIR) system

Function

Secondary Air Injection (AIR) system components, removing and installing

Combi-valve and check valve, checking

Secondary Air Injection (AIR) pump motor, checking

Secondary Air Injection (AIR) solenoid valve, checking

00-1

Technical data

Engine numbers, location

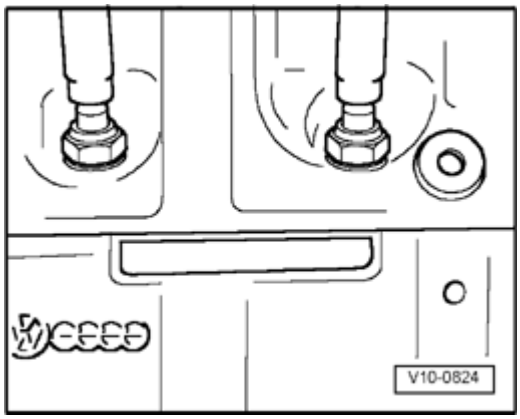

The engine numbers ("engine code" and "serial number") are die-stamped in the front of the cylinder block above the crankcase breather.

In addition, there is a label with the "engine code" and "serial number" on the drive belt cover.

The engine code is also included on the vehicle data plate.

00-2

Engine technical data

Engine code		ABA	ABA
Manufactured	from:	03.95	08.95
	to:	07.95	
Displacement	liters	2.0	2.0
Output	kW at RPM	85 at 5400	85 at 5400
	HP at RPM	115 at 5400	115 at 5400
Torque	Nm at RPM	165 at 3200	165 at 3200
	Ft. lb at RPM	122 at 3200	122 at 3200
Bore	mm	82.5	82.5
Stroke	mm	92.8	92.8
Compression ratio		9.4:1	9.4:1
RON	minimum	91 lead free	91 lead free
Fuel injection		Motronic multiport fuel injection	Motronic multiport fuel injection
Ignition		Motronic	Motronic
Knock control		Yes	Yes
On Board Diagnostic system		OBD	OBD II
Oxygen sensor control		1 Oxygen Sensor	2 Oxygen Sensors
Three way catalytic converter		Yes	Yes
Exhaust gas recirculation (EGR)		Yes	No
Secondary Air Injection system		Yes	Yes

10-1

Engine, removing and installing

Special tools, testers and auxiliary items

- Engine sling 2024 A
- G 000 100 grease
- Torque wrench VAG 1331: 5-50 Nm (4-37 ft lb)
- Torque wrench VAG 1332: 40-200 Nm (30-148 ft lb)
- Cable ties

10-2

Removing

The engine is removed by moving it toward the front together with the transmission.

CAUTION!

Determine correct radio anti-theft coding before disconnecting the battery.

- Ignition switched off.

- Disconnect battery negative cable (ground strap).

Note:

All tie wraps that are loosened or cut during engine removal must be replaced when the engine is installed.

- Remove air cleaner housing with intake air ducts.

- Loosen power steering reservoir hose clamp.

- Disconnect power steering pressure line clamps from subframe and transmission.

- Remove power steering pump with bracket and lay it to the side; power steering hoses remain connected.

⇒ *Repair Manual, Suspension, Wheels, Brakes, Steering, Repair Group 48.*

- Drain engine coolant ⇒ Page 19-9

- Remove lock carrier (upper radiator support) with attached parts.

⇒ *Repair Manual Body Exterior, Interior, Repair Group 50*

- Remove coolant fan and fan shroud.

Vehicles with A/C:

- Refer to additional information and removal instructions ⇒ Page 10-14 .

10-4

Vehicles with manual transmission:

- Remove clutch slave cylinder.

⇒ *Repair Manual, 5 Spd. Manual Transmissio 02A, Repair Group 30*

- Disconnect gear shift mechanism from transmission.

⇒ *Repair Manual, 5 Spd. Manual Transmissio 02A, Repair Group 34*

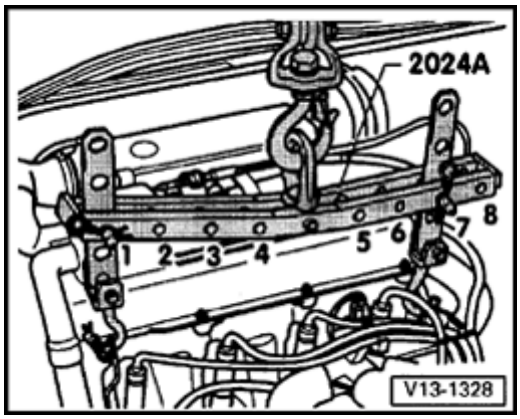

- Install engine sling 2024 A and lift slightly wi shop crane:

  Drive belt side:

  - 2nd hole up from hook in cross bar posit 1-

  Flywheel side:

  - 2nd hole up from hook in cross bar posit 7-

CAUTION!

Always use cotter pins on hooks and pins.

10-5

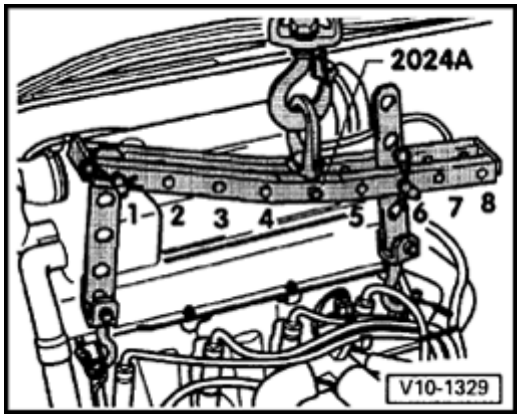

Vehicles with automatic transmission

- Install engine sling 2024 A and lift slightly with shop crane:

  Drive belt side:

  - 4th hole up from hook in cross bar position -1-

  Flywheel side:

  - 2nd hole up from hook in cross bar position -6-

CAUTION!

Always use cotter pins on hooks and pins.

Note:

- *The end of the cross bar marked with installation positions 1 through 4 points toward drive belt.*
- *Hole numbers in the hook members are counted from the hook end.*

10-6

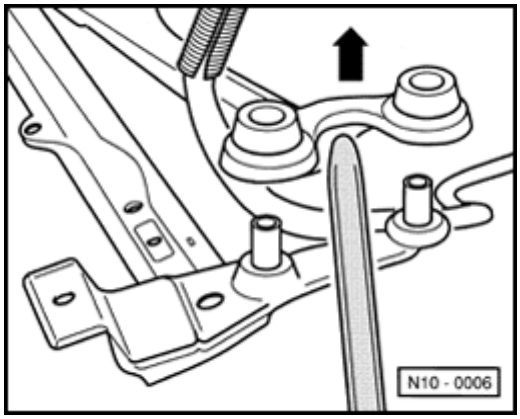

All vehicles:

- Disconnect subframe and, on one side, pry bracket from rubber subframe mounting.
- Separate power steering pressure lines from disconnected subframe.
- Lift engine together with transmission out toward the front.

CAUTION!

Lift unit out carefully to avoid damage to body.

For engine repairs, mount engine in engine stand with VW 540 holding fixture.

10-7

Installing

Install in reverse order of removal, but note the following:

- Check clutch release bearing for wear, repla necessary.

- Lightly lubricate clutch release bearing, clutc release guide sleeve and transmission input shaft splines with G 000 100 grease.

- Check whether guide sleeves for centering engine and transmission are in cylinder bloc not, install.

- During installation of engine and transmissio sure to maintain clearance for drive axle sha

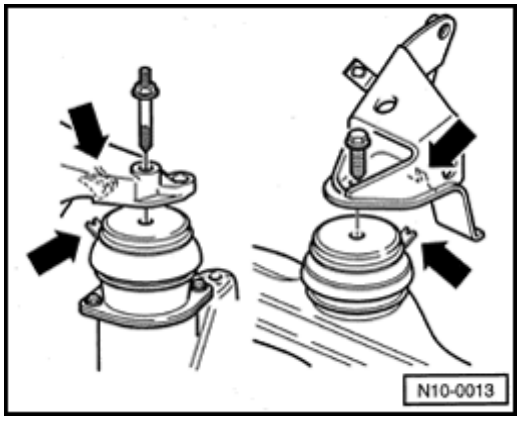

- When installing engine mounts, be sure that recesses on right rear engine mount bracket front engine mount engage in guide pins of bonded rubber mounts (arrows).
- Relieve tension on engine mounts by shakin engine.

Tightening torques ⇒ Page 10-9

- Install clutch slave cylinder.

⇒ *Repair Manual, 5 Spd. Manual Transmissio 02A, Repair Group 30*

- Install gear shift mechanism.

⇒ *Repair Manual, 5 Spd. Manual Transmissio 02A, Repair Group 34*

- Install power steering pump.

⇒ *Repair Manual, Suspension, Wheels, Brake*

Steering, Repair Group 48.

10-8

- Install lock carrier with attached parts.

⇒ *Repair Manual Body Exterior, Interior, Repair Group 50*

Engines with ribbed drive belt without tensioner:

- Install ribbed drive belt ⇒ Page 13-11 .

All engines:

- Fill engine cooling system coolant ⇒ Page 19-9

- Adjust accelerator pedal cable ⇒ Page 20-10

- Check electrical connections and routing.

⇒ *Repair Manual, Electrical Equipment, Repair Group 97*

- Check ignition timing and adjust if necessary.

⇒ *Repair Manual, 2.0 Liter 4-Cyl. 2V Fuel Injection & Ignition, Engine Code(s): ABA m.y. 1995, Repair Group 28*

⇒ *Repair Manual, 2.0 Liter 4-Cyl. 2V Fuel Injection & Ignition, Engine Code(s): ABA m.y. 1996-1997, Repair Group 28*

- Carry out idle check.

⇒ *Repair Manual, 2.0 Liter 4-Cyl. 2V Fuel Injection & Ignition, Engine Code(s): ABA m.y. 1995, Repair Group 24*

⇒ *Repair Manual, 2.0 Liter 4-Cyl. 2V Fuel Injection & Ignition, Engine Code(s): ABA m.y. 1996-1997, Repair Group 24*

- Adjust headlights and adjust if necessary.

⇒ *Repair Manual, Maintenance*

- If necessary, adjust gear shift linkage cables:

⇒ *Repair Manual, 5 Spd. Manual Transmission 02A, Repair Group 34*

10-9

Tightening torques

Fastener/Connection		Tightening torque
Engine to transmission	M10	60 Nm (44 ft lb)
	M12	80 Nm (59 ft lb)
Flywheel cover plate	M7	10 Nm (07 ft lb)
Axle shafts to drive flanges		45 Nm (33 ft lb)
Exhaust pipe to manifold		40 Nm (30 ft lb)
Engine mount to body		50 Nm (37 ft lb)

10-10

Engine and transmission mount tightening torques

- Bolt threads lubricated

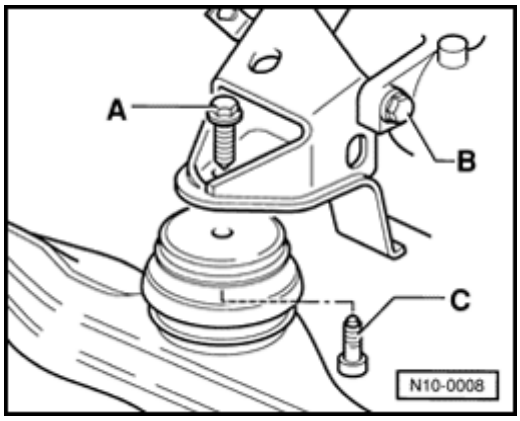

Front engine mount

A - 55 Nm (41 ft lb)

B - 55 Nm (41 ft lb)

C - 50 Nm (37 ft lb)

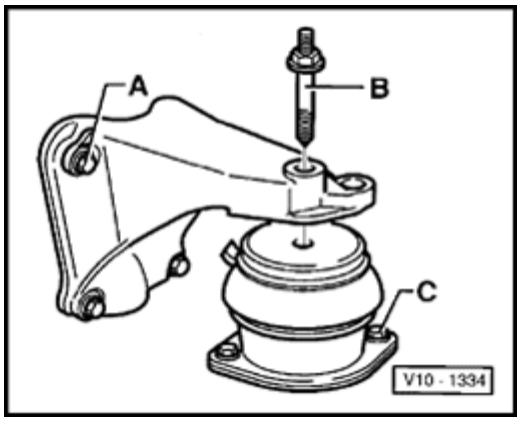

Rear right engine mount

A - 25 Nm (18 ft lb)

B - 50 Nm (37 ft lb)

C - 25 Nm (18 ft lb)

10-11

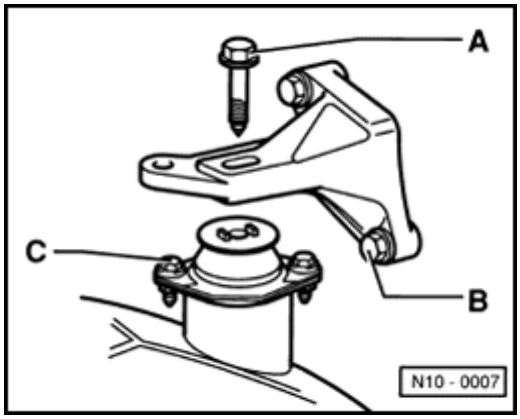

- Rear left engine mount for manual transmission

  A - 60 Nm (44 ft lb)

  B - 25 Nm (18 ft lb)

  C - 30 Nm (22 ft lb)

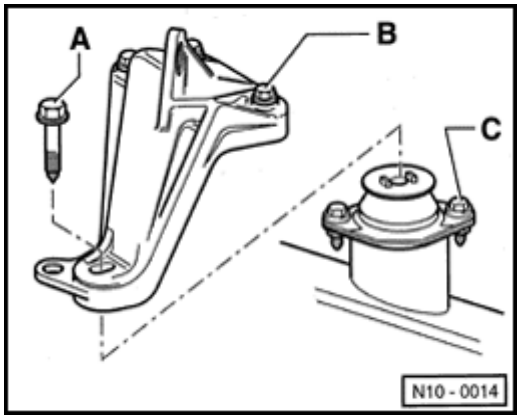

- Rear left engine mount for automatic transmission

  A - 60 Nm (44 ft lb)

  B - 25 Nm (18 ft lb)

  C - 30 Nm (22 ft lb)

10-12

Engine and transmission, aligning

Aligning is only necessary when the engine and transmission have been removed and additionally the sub-frame and engine carrier bonded rubber mounts have been loosened.

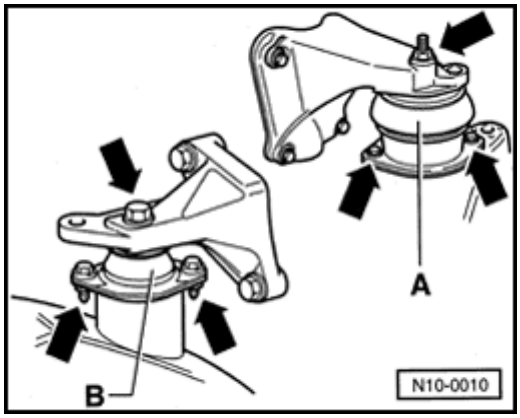

- Loosen bonded rubber mount -A- (engine mount) on sub-frame and console.
- Loosen bonded rubber mount -B- (transmission mount) on transmission and sub-frame.

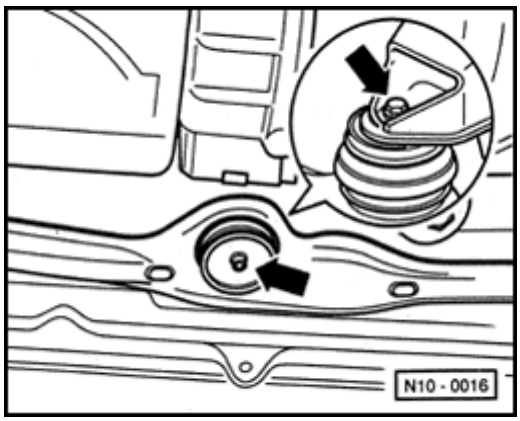

- Loosen front bonded rubber mount on engine carrier and bracket.
- Align assembly by rocking until mounts are free of stress.
- Tighten bolts again in the same sequence.

  Tightening torques ⇒ Page 10-10

10-13

Rubber bushings for engine mount, replacing

- Install engine holding fixture 10-222A with supports 10-222A/1.

- Connect engine sling in hook eye on cylinde head (left side) and tighten to lift engine sligh

- Remove engine mount.

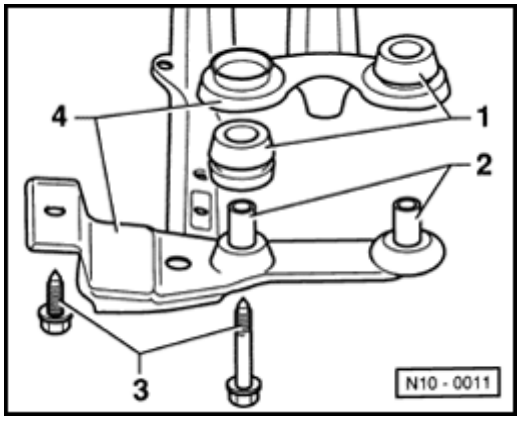

- Pry spacer -2- from rubber mount bushing.
- Remove rubber mount bushings -1-.

  Take notice of rubber mount bushing -1- installation position.
- Install new rubber mount bushings.
- Press engine mount spacer into rubber mou bushings.
- Install engine mount -4- and tighten bolts -3-

  Tightening torque: 80 Nm (59 ft lb)

10-14

Vehicles with A/C, additional information on removing and installing

CAUTION!

- ***DO NOT open A/C refrigerant circuit. DO release A/C refrigerant into the atmosphe***
- ***Refrigerant lines bend easily.***
- ***Only trained technicians using the proper equipment should replace the A/C refrigerant.***

To remove and install the engine without openi the A/C refrigerant circuit:

- Remove fasteners for A/C receiver/dryer anc hang free (do not disconnect).
- Remove retaining clamps for refrigerant lines
- Remove ribbed belt ⇒ Page 13-11 .
- Remove lock carrier with attached parts

⇒ *Repair Manual, Body Exterior, Interior, Repa Group 50.*

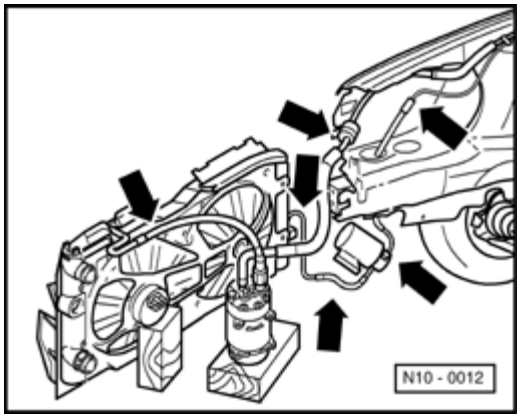

- Remove A/C compressor and place to the si with radiator, coolant fan and A/C condenser

⇒ *Repair Manual, Heating & Air Conditioning, Repair Group 87*

CAUTION!

Refrigerant hoses (arrows) must not be stressed.

13-1

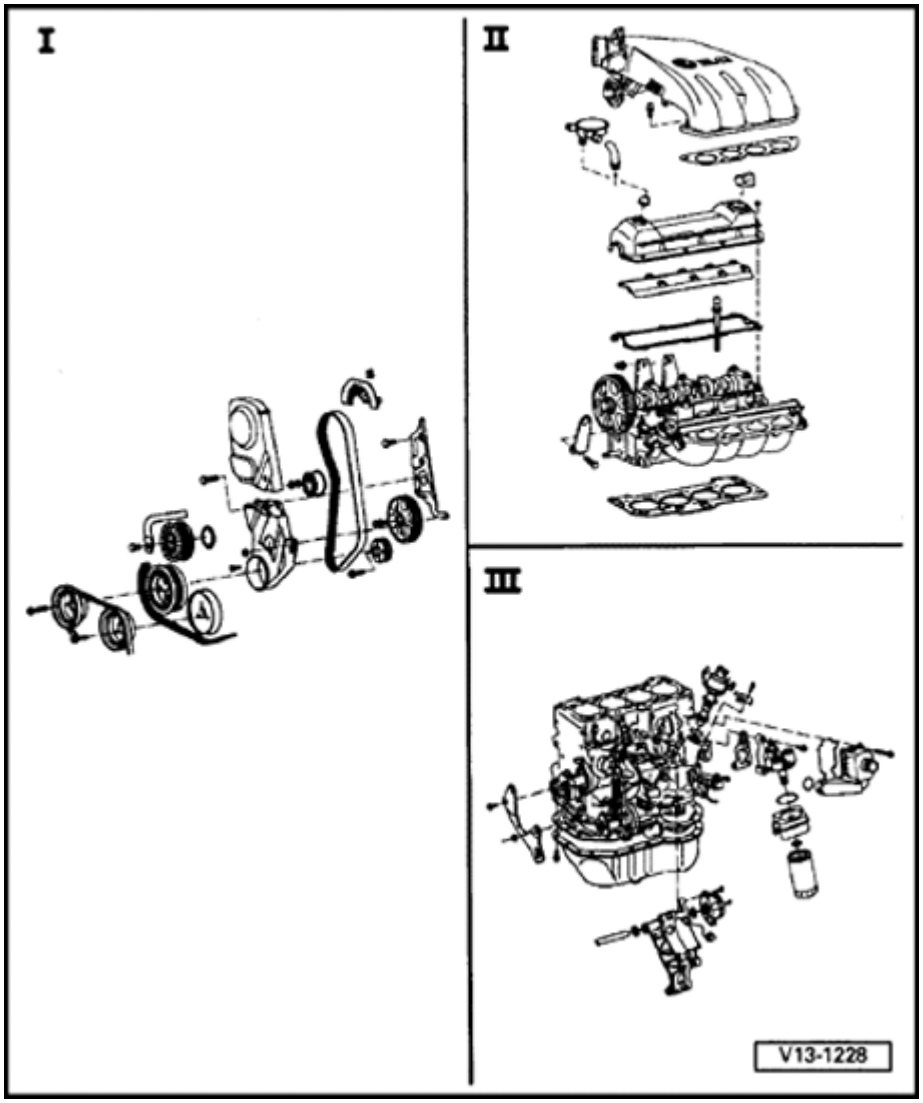

Engine disassembling and assembling

CAUTION!

- ***If large amounts of metal shavings or small metal particles are found in the engine oil, caused by wear of the crankshaft main and connecting rod bearings, thoroughly clean the oil passages to remove contaminants and help prevent later damage.***
- ***The oil cooler, if contaminated, cannot be sufficiently cleaned and must be replaced.***

I - ⇒ Page 13-2
II - ⇒ Page 13-5
III - ⇒ Page 13-7

13-2

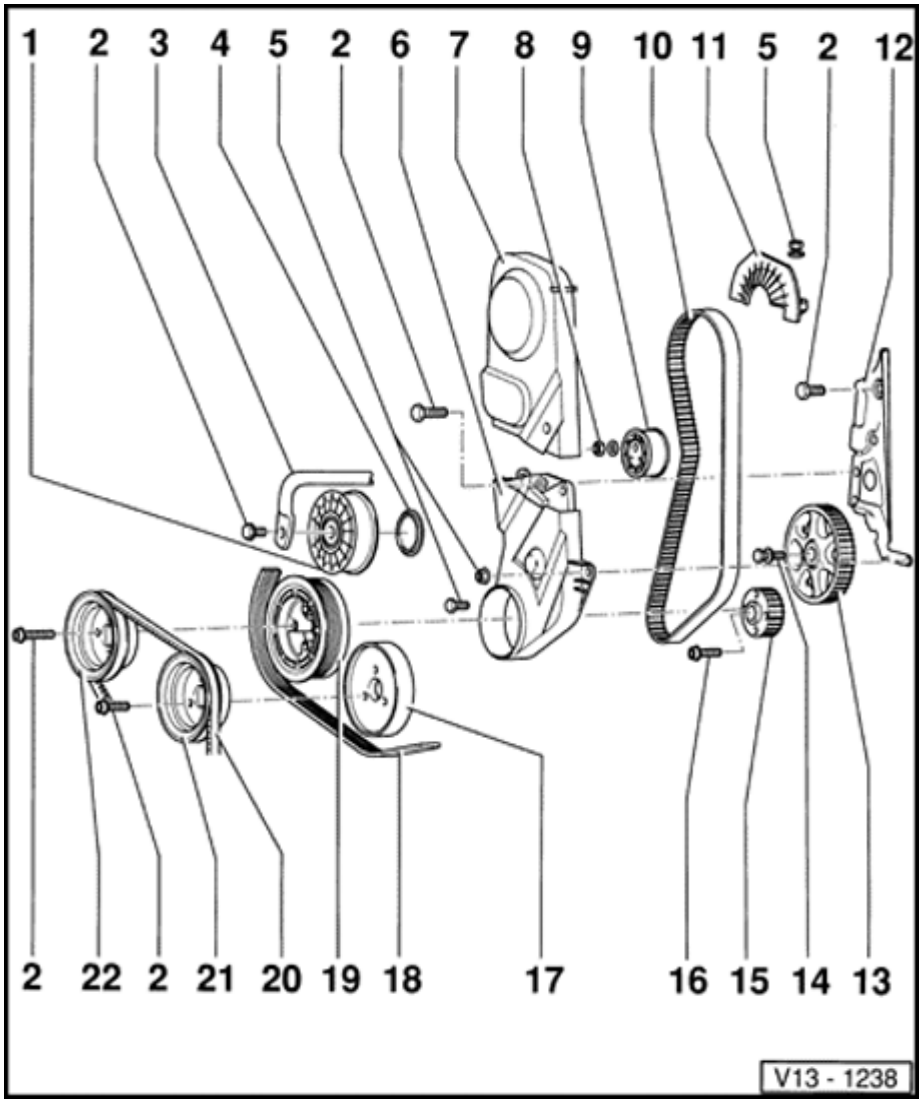

Part I

1 - Tensioner

2 - 25 Nm (18 ft lb)

3 - Tensioner lever

4 - Dust sleeve

5 - 10 Nm (7 ft lb)

6 - Drive belt guard, lower

7 - Drive belt guard, upper

8 - 45 Nm (33 ft lb)

9 - Tensioner pulley

10 - Toothed drive belt

- Before removing, mark direction of rotation
- Check for wear
- Do not kink
- Removing and installing ⇒ Page 13-13

13-3

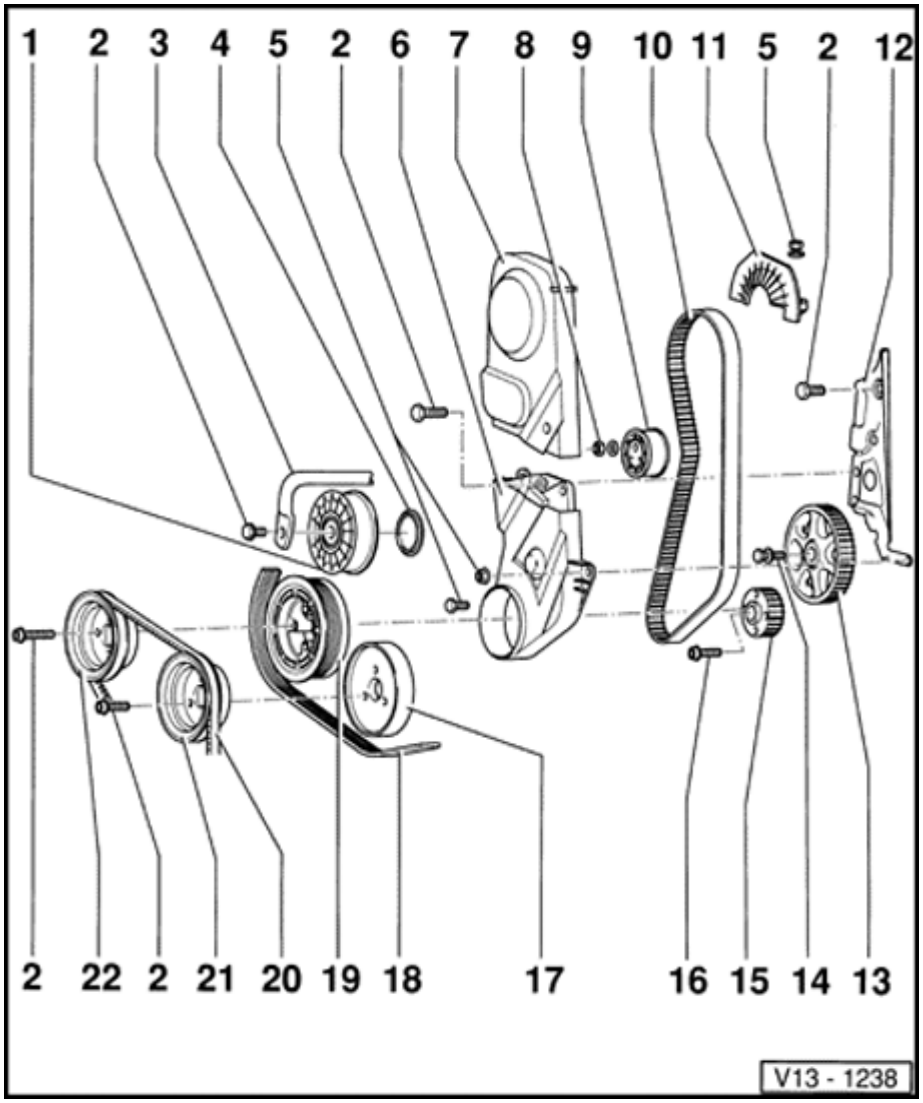

11 - Drive belt guard

12 - Drive belt guard, rear

13 Drive belt - sprocket, intermediate shaft

14 - 80 Nm (59 ft lb)

- To loosen and tighten use holding fixture 3036

15 - Drive belt sprocket, crankshaft

16 - 90 Nm (66 ft lb) plus additional $^{1}/_{4}$ -turn (90 °)

- Always replace
- To loosen and tighten, use holding fixture 3099
- Lubricate threads and

shoulder

- Turning additional $^{1}/_{4}$ -turn (90 °) can be done in stages

17 - Pulley

- For coolant pump
- Version with ribbed belt

13-4

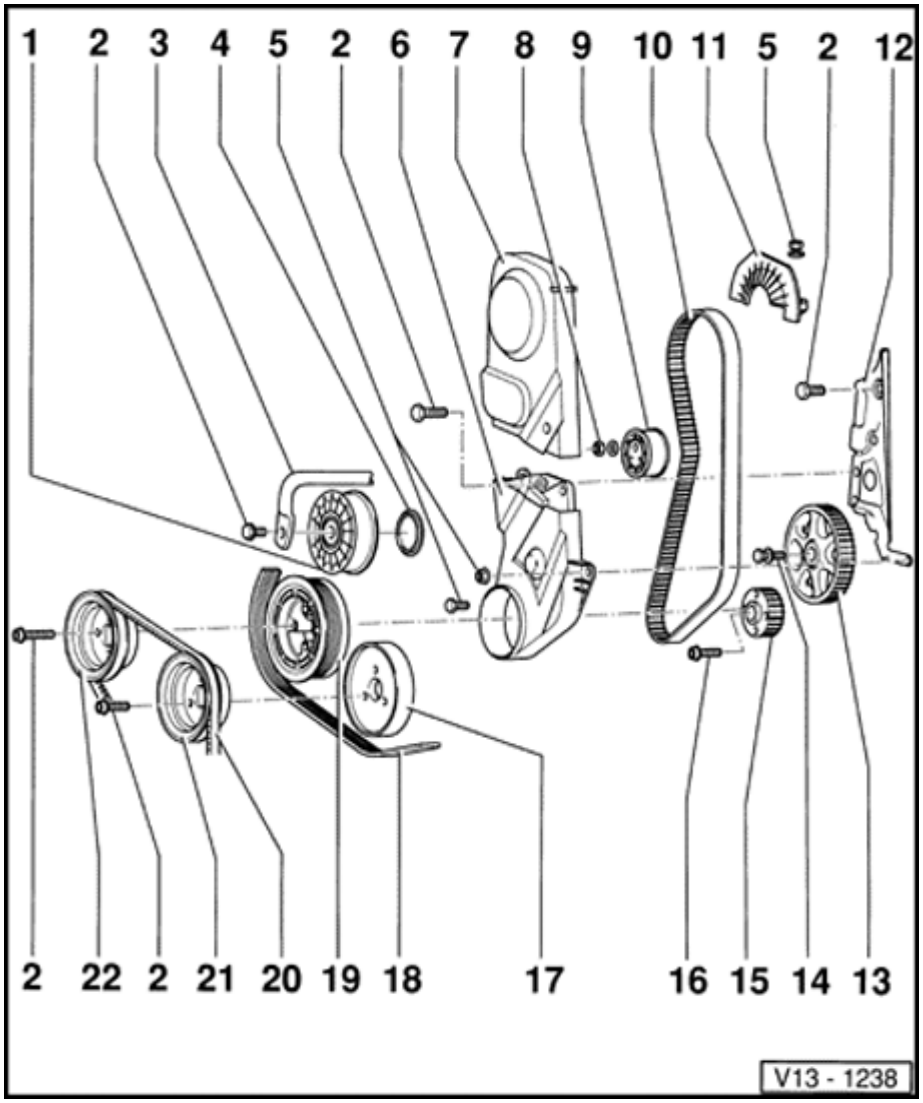

18 - Ribbed drive belt

- Before removing, mark direction of rotation
- Removing and installing ⇒ Page 13-11

19 - Vibration damper, crankshaft

- Also serves as pulley for ribbed drive belt
- Assembly only possible in one position (holes are offset)
- Toothed drive belt, installing ⇒ Page 13-13

20 - V-belt

- Adjusting

⇒ *Repair Manual, Suspension, Wheels, Brakes,*

Steering, Repair Group 48

21 - Pulley

- For coolant pump
- Version for V-belt

22 - Pulley

- For crankshaft

13-5

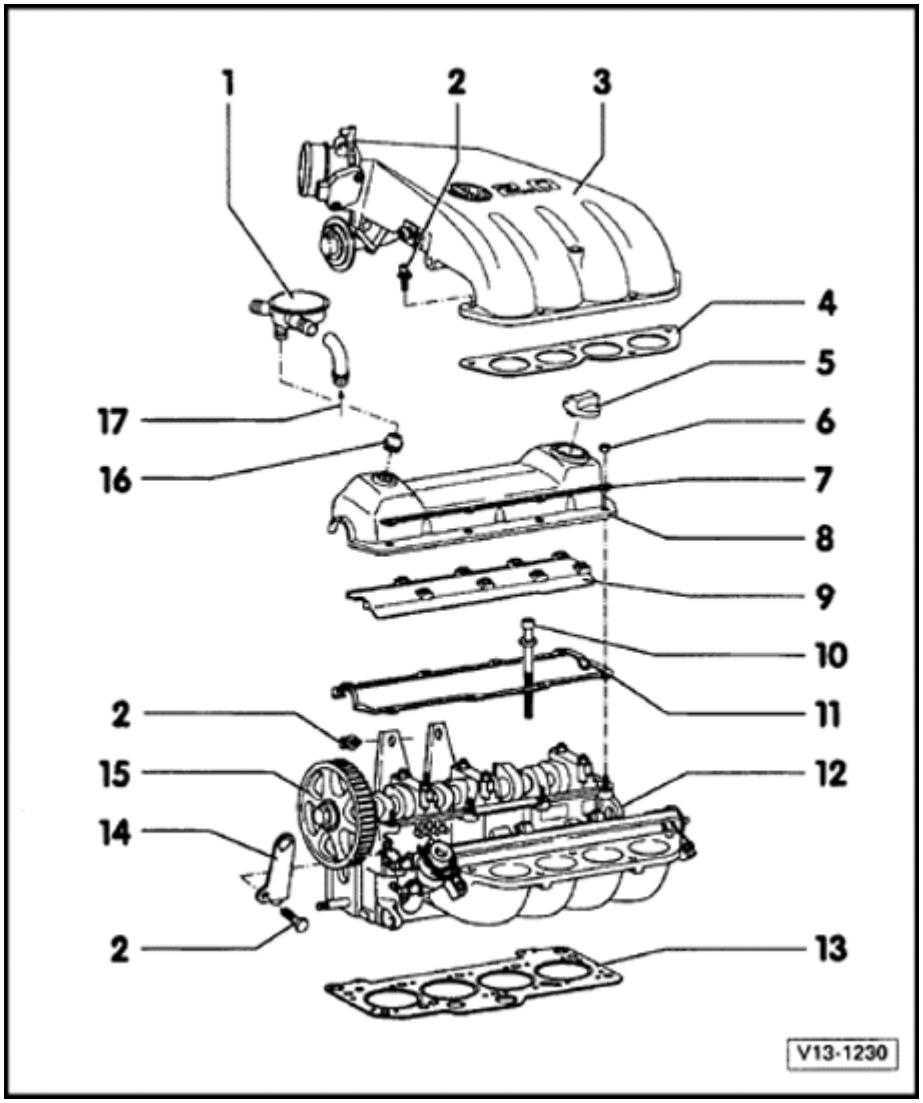

Part II

1 - Positive Crankcase Ventilation (PCV) valve

2 - 20 Nm (15 ft lb)

3 - Intake manifold, upper

4 - Gasket

- Always replace

5 - Cap

- Replace gasket if damaged

6 - 10 Nm (7 ft lb)

7 - Reinforcing strip

8 - Cylinder head cover

9 - Oil deflector

10 - Cylinder head bolt

- Tightening and loosening sequence ⇒ Page 15-6

13-6

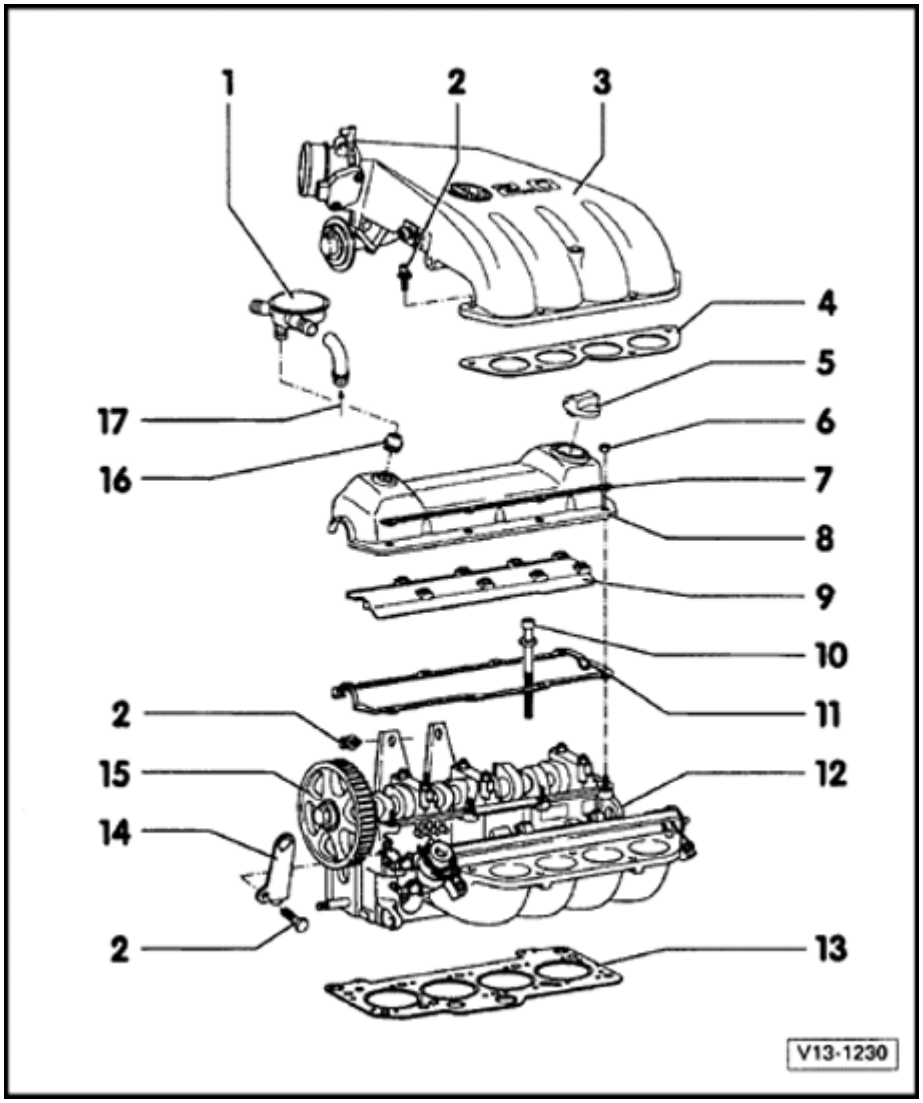

11 - Cylinder head cover gasket

- Replace if damaged

12 - Cylinder head

- Removing and installing ⇒ Page 15-6
- When replaced, always replace engine coolant

13 - Cylinder head gasket

- Always replace
- Always replace engine coolant

14 - Lifting eye

15 - Camshaft drive sprocket

- Position during installation of drive belt ⇒ Page 13-13

16 - Grommet

17 - Hose connection

- From crankcase breather ⇒ Page 13-8 , item 13

13-7

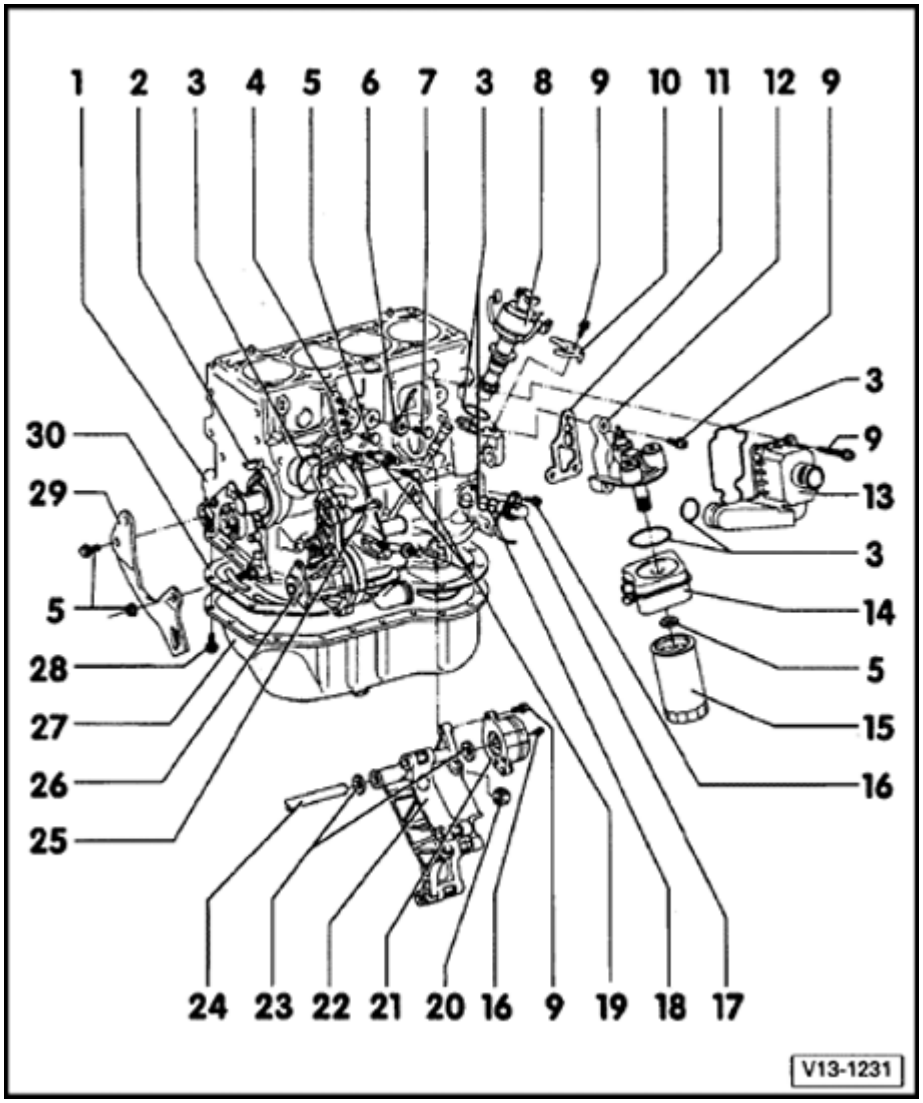

Part III

1 - Cylinder block

- Removing and installing sealing flange and flywheel or drive plate ⇒ Page 13-18
- Removing and installing crankshaft ⇒ Page 13-27

- Disassembling and assembling pistons and connecting rods ⇒ Page 13-31

2 - Woodruff key

- Check for tight fit

3 - O-ring

- Always replace

4 - Engine ground connection

5 - 25 Nm (18 ft lb)

6 - Knock sensor

- Checking

⇒ *Repair Manual, 2.0 Liter 4-Cyl. 2V Fuel Injection & Ignition, Engine Code(s): ABA m.y. 1995, Repair Group 01*

⇒ *Repair Manual, 2.0 Liter 4-Cyl. 2V Fuel Injection & Ignition, Engine Code(s): ABA m.y. 1996-1997, Repair Group 01*

13-8

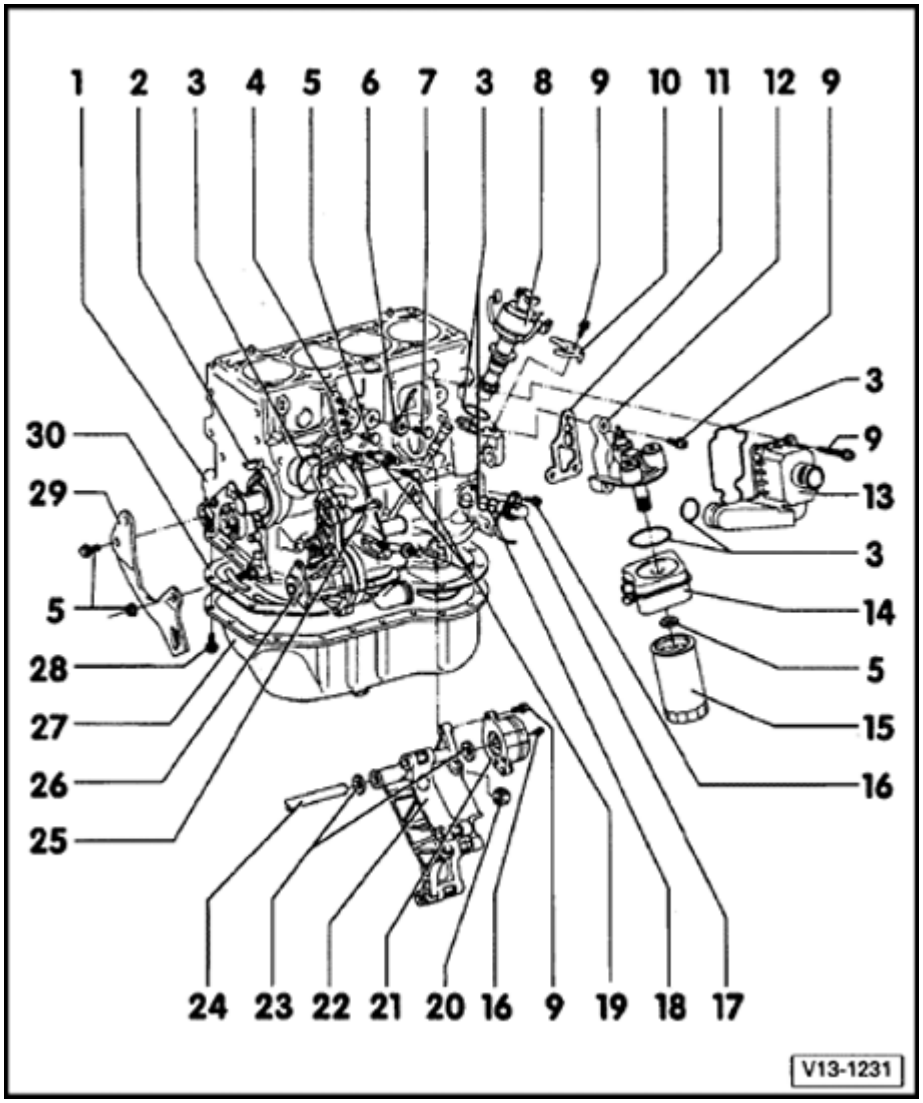

7 - 20 Nm (15 ft lb)

- Incorrect tightening torque can influence knock sensor function

8 - Ignition distributor

- Installing

⇒ *Repair Manual, 2.0 Liter 4-Cyl. 2V Fuel Injection & Ignition, Engine Code(s): ABA m.y. 1995, Repair Group 28*

⇒ *Repair Manual, 2.0 Liter 4-Cyl. 2V Fuel Injection & Ignition, Engine Code(s): ABA m.y. 1996-1997, Repair Group 28*

9 - 25 Nm (18 ft lb)

10 - Clamp

11 - Gasket

- Always replace

12 - Oil filter bracket

13 - Crankcase breather

14 - Oil cooler

- Coat flange contact area, outside sealing ring, with sealer AMV 188 100 02
- Ensure clearance to surrounding components
- Replace if oil has been contaminated ⇒Caution!, ⇒ Page 13-1

13-9

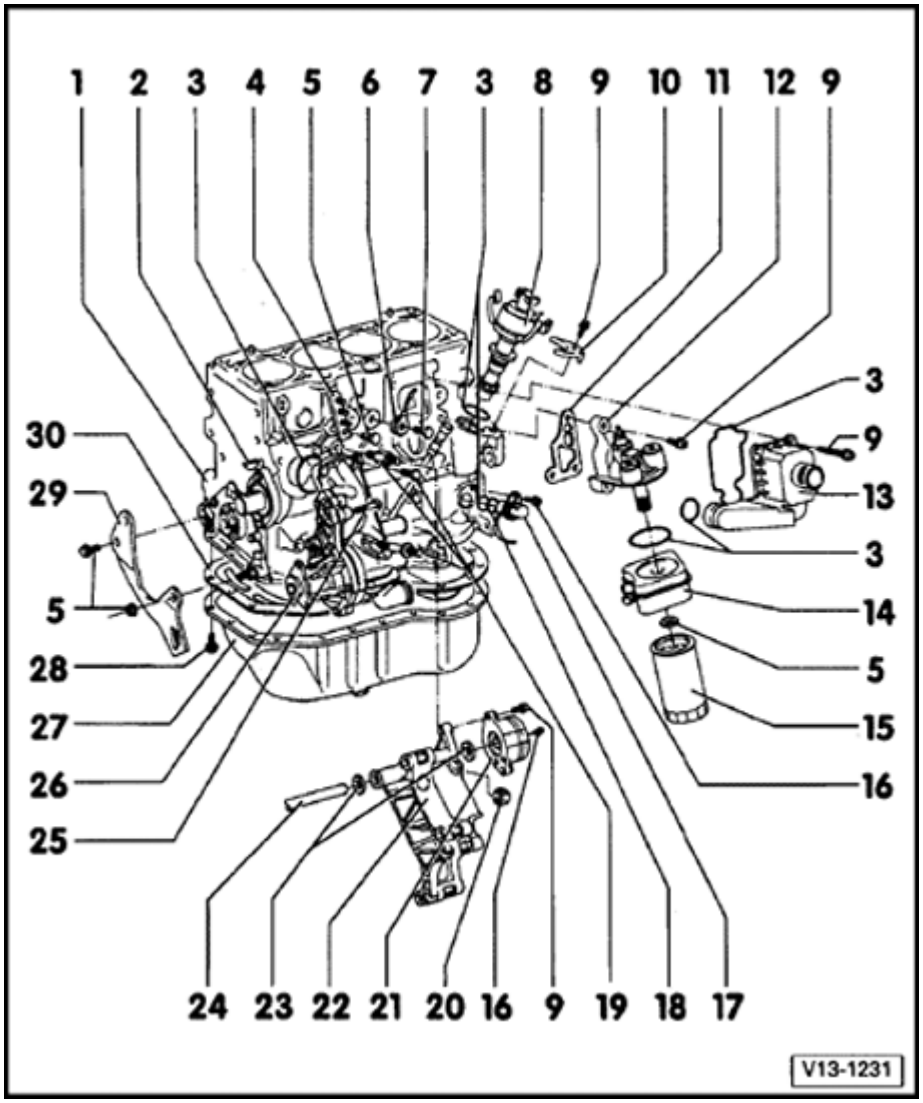

15 - Oil filter

- Loosen with strap wrench
- Tighten by hand
- Follow installation instructions on oil filter

16 - 10 Nm (7.5 ft lb)

17 - Engine speed (RPM) sensor

- Checking

⇒ *Repair Manual, 2.0 Liter 4-Cyl. 2V Fuel Injection & Ignition, Engine Code(s): ABA m.y. 1995, Repair Group 01*

⇒ *Repair Manual, 2.0 Liter 4-Cyl. 2V Fuel Injection & Ignition, Engine Code(s): ABA m.y. 1996-1997, Repair Group 01*

18 - Support rings

19 - 20 Nm (15 ft lb) plus additional $^{1}/_{4}$ -turn

(90 °)

- Always replace

20 - 30 Nm (22 ft lb)

21 - Tensioner

22 - Bracket

23 - Seal

- Always replace

13-10

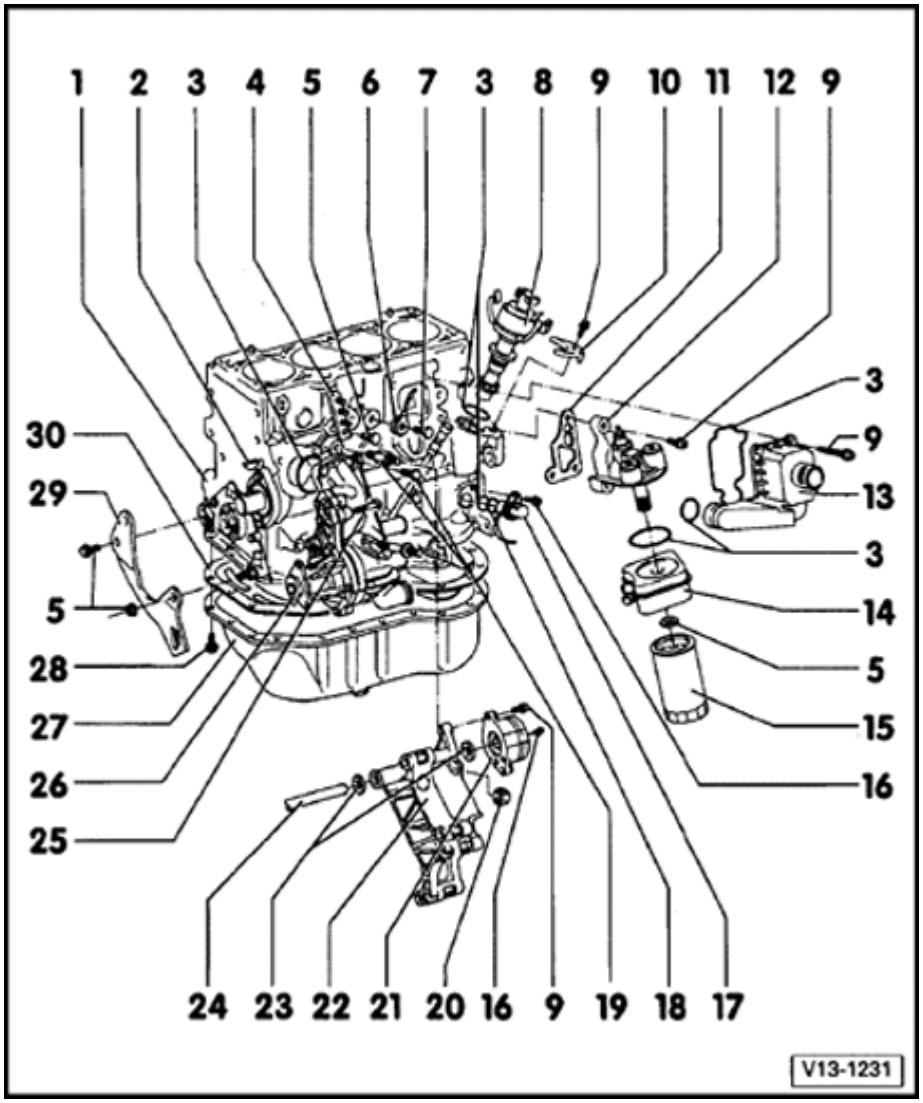

24 - Tensioner lever

25 - Hammer-head screw

26 - Coolant pump

- Disassembling and assembling ⇒ Page 19-7

27 - Oil pan

28 - 20 Nm (15 ft lb)

- Loosen or tighten bolts on flywheel side using tool 3185

29 - Bracket

- For power steering pump

30 - Gasket

- Always replace

13-11

Ribbed drive belt, removing and installing

Note:

- *Before removing the ribbed belt, mark its running direction so that it can be reinstalle same way.*
- *When installing, be sure belt is correctly sea in pulleys.*

Special tools, testers and auxiliary items

- Ribbed belt installation tool 3299

Removing

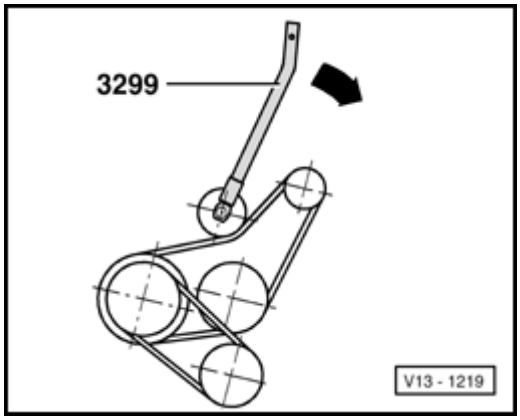

- Lift belt tensioner with ribbed belt installation 3299 to relieve belt tension.
- Remove belt from generator pulley.

Note:

Belt drive for vehicles without A/C shown. Also *Page 13-12* .

- Remove V-belt for power steering pump.

⇒ *Repair Manual, Suspension, Wheels, Brake Steering, Repair Group 48*

- Remove ribbed belt.

13-12

Installing

- Install ribbed belt on crankshaft vibration damper.

- Install V-belt for power steering pump.

⇒ *Repair Manual, Suspension, Wheels, Brake Steering, Repair Group 48*

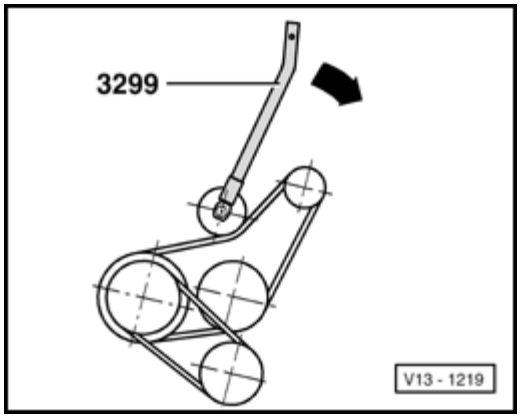

Vehicles without A/C:

- Lift belt tensioner with ribbed belt installation 3299 and install ribbed belt.

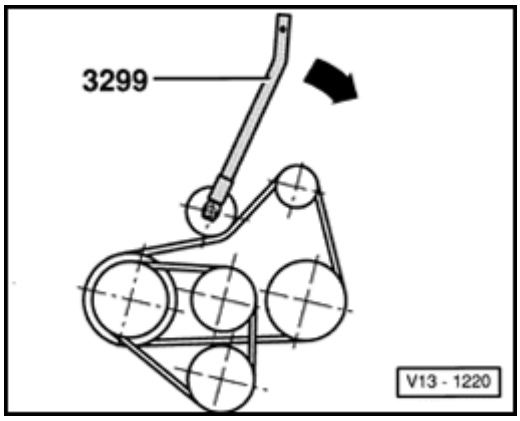

Vehicles with A/C:

- Lift belt tensioner with ribbed belt installation 3299 and install ribbed belt.

13-13

Toothed drive belt, removing and installing

(Adjusting valve timing)

See Caution! and notes ⇒ Page 13-14

Special tools, testers and auxiliary items

- Ribbed belt installation tool 3299
- Pin wrench Matra V159
- Torque wrench VAG 1331 (5-50 Nm)

Removing

- Remove ribbed drive belt ⇒ Page 13-11 .
- Remove tensioner for ribbed belt.
- Remove crankshaft vibration damper and pulley.
- Remove coolant pump pulley.
- Remove upper and lower parts of drive belt guard.
- Mark running direction on toothed drive belt.
- Loosen tensioner and remove toothed belt.

13-14

Installing

Note:

For repairs that require the toothed belt to be removed, carry out the toothed belt adjustment as follows.

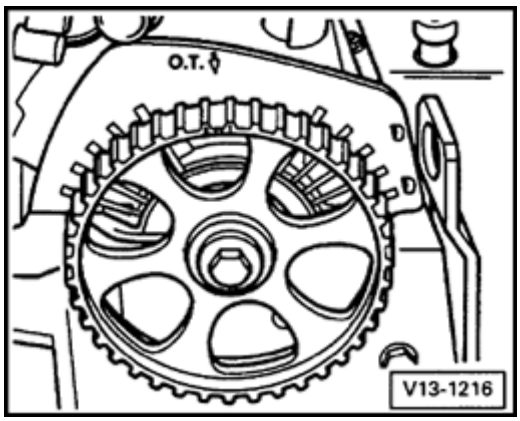

- Align marking on camshaft sprocket with marking on drive belt guard.

CAUTION!

Before turning the camshaft, make sure that the pistons are NOT at Top Dead Center (TDC). With the belt removed, there is danger of damage from valve and piston interference.

- Install drive belt on crankshaft drive belt sprocket and on intermediate shaft drive belt sprocket (note running direction when re-installing a used belt.)

Note:

Disregard marking on intermediate shaft drive belt sprocket.

- Install lower drive belt guard.
- Install coolant pump pulley.
- Install crankshaft vibration damper and pulley (note installation position, holes are offset).
- Turn crankshaft to place Cyl. 1 at TDC.

13-15

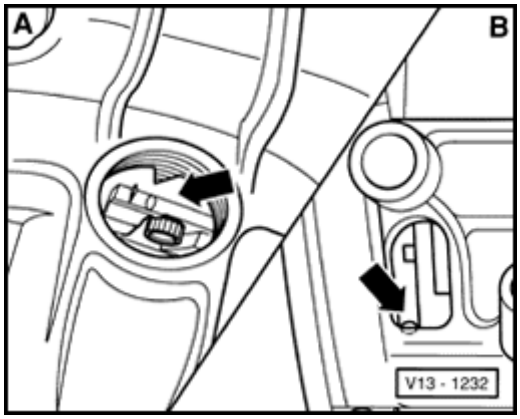

Engine installed:

- Align flywheel -A- or drive plate -B- marks as shown (arrows) to set crankshaft to Cyl. 1 TDC.

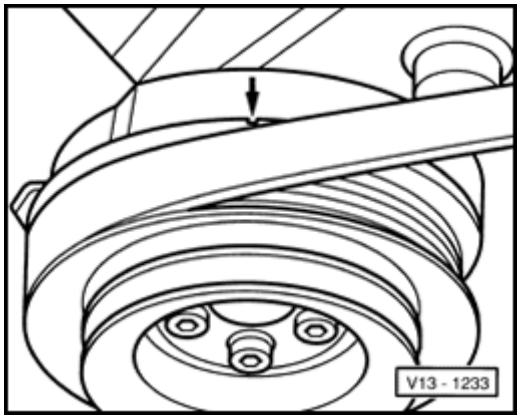

Engine removed:

- Turn crankshaft vibration damper to align notch with timing mark (arrow) and set crankshaft to Cyl. 1 TDC.

13-16

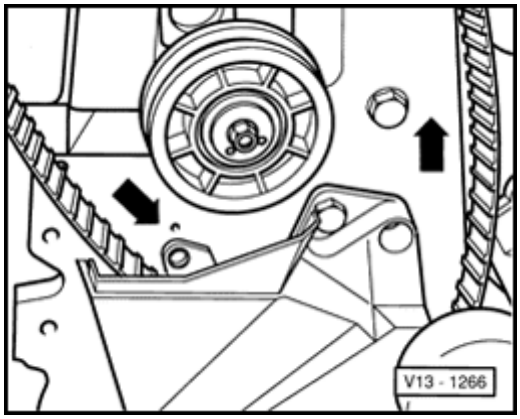

- Turn intermediate shaft drive belt sprocket with toothed belt (in direction indicated by arrows) until distributor rotor aligns with Cyl. 1 marking on distributor housing.

  Drive belt slips over teeth of crankshaft drive belt sprocket.

- Install toothed drive belt on tensioner roller and camshaft drive belt sprocket.

Note:

To make drive belt installation easier, loosen tensioner roller lock nut by approximately one thread.

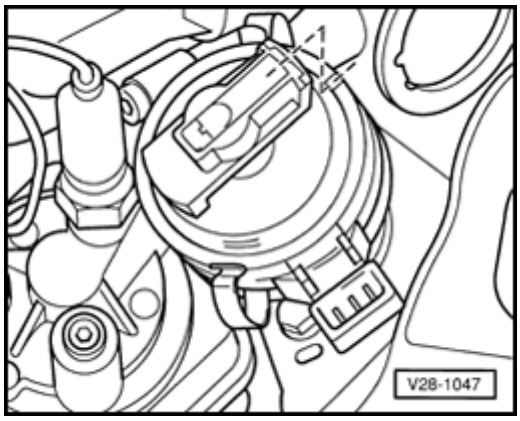

Marking for Cyl. 1 on distributor housing

13-17

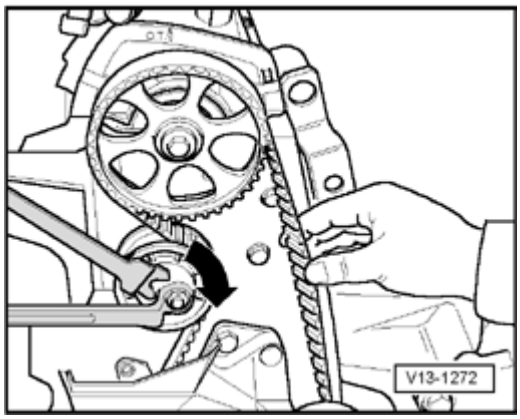

- Increase tension on toothed belt by turning tensioner pulley with pin wrench (e.g. Matra V159) in direction of arrow.
  - It must be just possible to twist the belt by 90° with the thumb and forefinger half-way between the camshaft and intermediate shaft sprockets.
- Tighten lock nut on belt tensioner.

  Tightening torque: 45 Nm (33 ft lb)
- Turn crankshaft though two complete revolutions and recheck adjustment.
- Check alignment of ignition distributor rotor with markings on distributor housing.
- Install upper drive belt guard.
- Install tensioner for ribbed belt.

  Tightening torque: 20 Nm (15 ft lb)
- Installing ribbed drive belt ⇒ Page 13-11 .

13-18

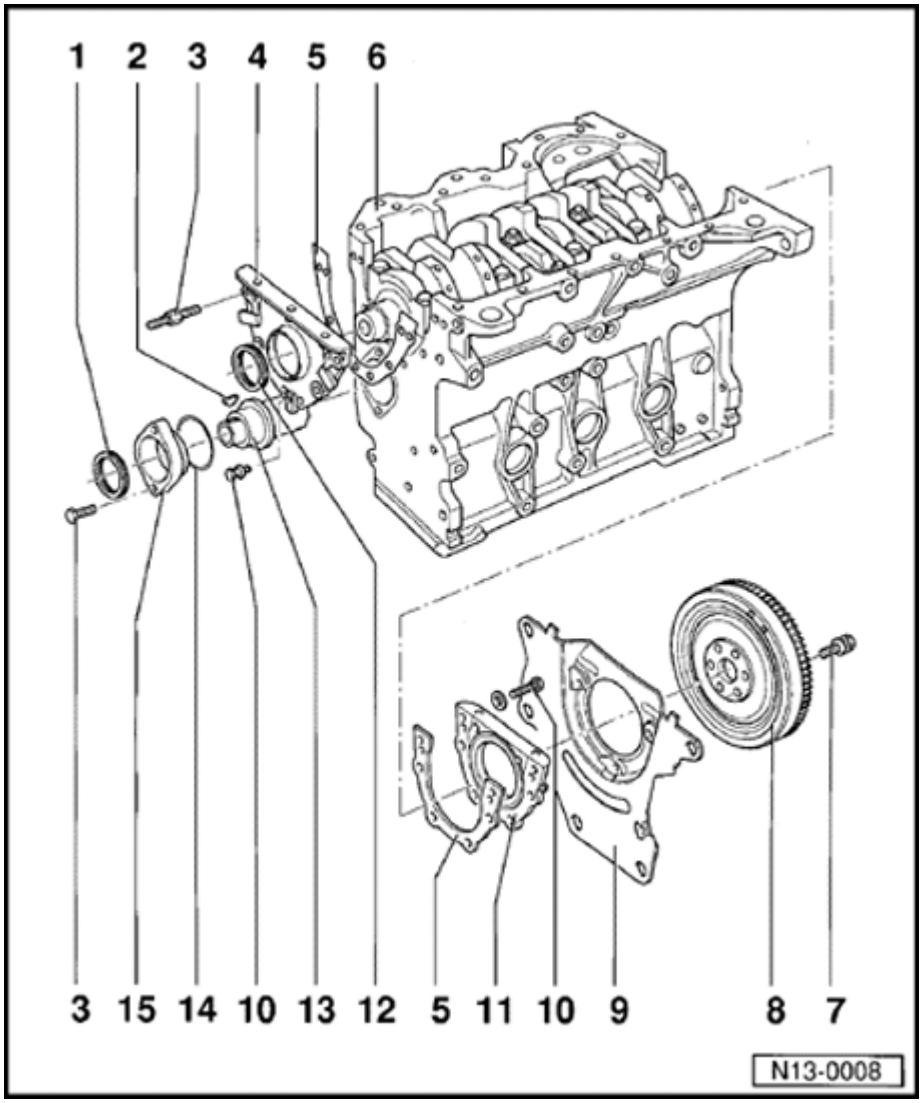

Sealing flange and flywheel or drive plate, removing and installing

Note:

For clutch repairs

⇒ *Repair Manual, 5 Spd. Manual Transmission 02A, Repair Group 30*

1 - Oil seal

- Install with 10-203
- Lightly lubricate sealing lip
- To remove, remove sealing flange

2 - Woodruff key

- Check for tight fit

3 - 25 Nm (18 ft lb)

4 - Sealing flange

5 - Gasket

- Always replace

6 - Cylinder block

- Removing and installing crankshaft ⇒ Page 13-27

- Disassembling and assembling pistons and connecting rods ⇒ Page 13-31

13-19

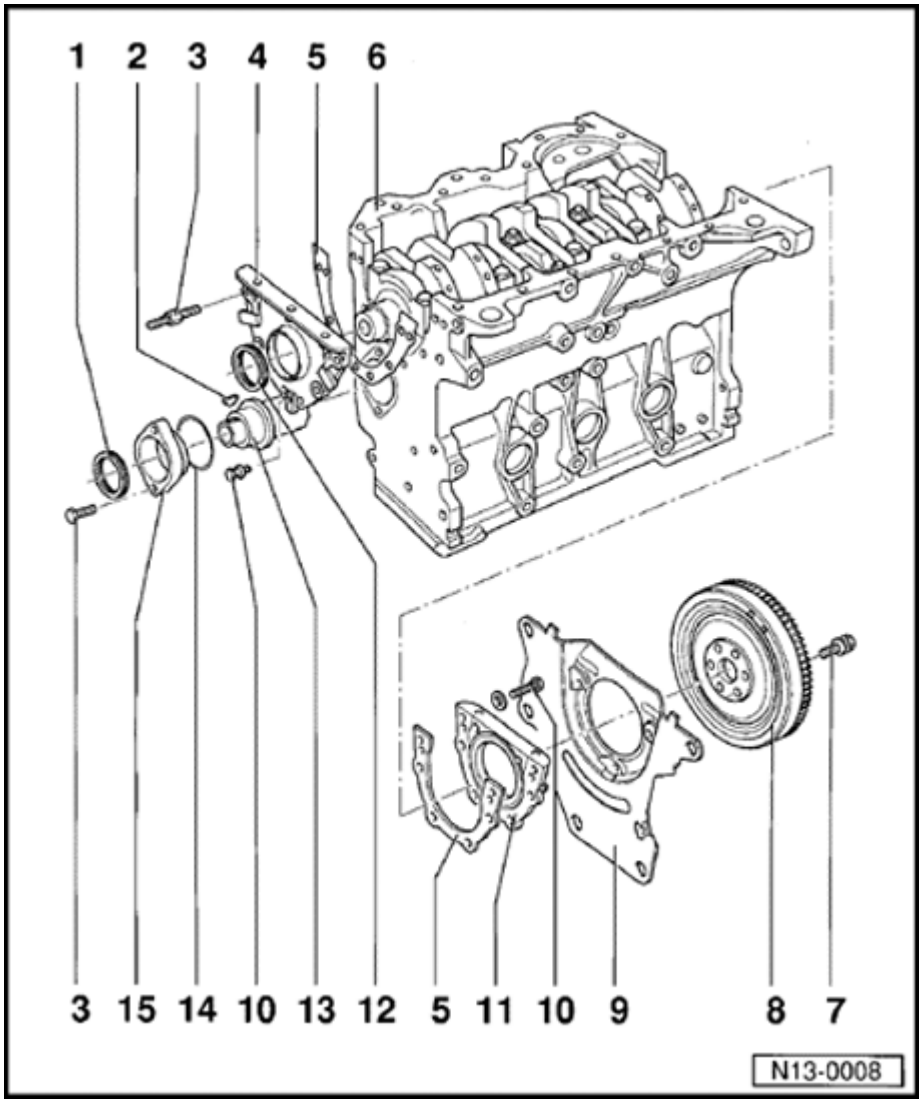

7 - 60 Nm (44 ft lb) plus additional $^1/_4$ -turn (90 °)

- Always replace

8 - Flywheel or drive plate

- Drive plate, removing and installing ⇒ Page 13-24
- To remove and install flywheel, counter-hold with tool 3067

9 - Intermediate plate

- Must fit on guide sleeves
- Do not bend or otherwise damage during assembly

10 - 10 Nm (7 ft lb)

11 - Sealing flange

with oil seal

- Replace only as complete assembly
- Lightly lubricate sealing lip

12 - Oil seal

- Replacing ⇒ Page 13-21

13 Intermediate - shaft

- First remove ignition distributor
- Axial clearance max. 0.25 mm (0.0098 in.)

13-20

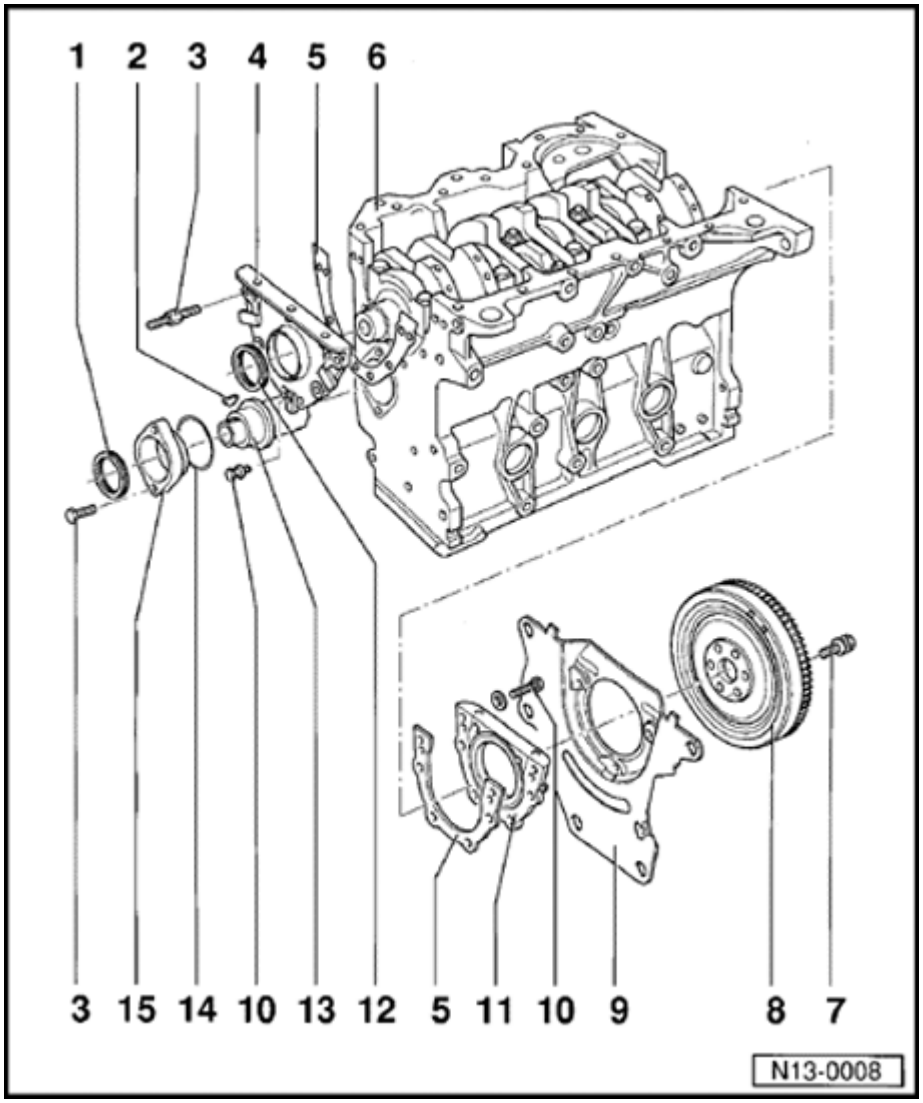

14 - O-ring

- Replace if damaged

15 Intermediate - shaft sealing flange

13-21

Crankshaft oil seal (pulley end), replacing

Special tools, testers and auxiliary items

- Counter-hold tool 3099
- Oil seal extractor 2085
- Oil seal fitting tool 3083

Removing

- Remove ribbed drive belt ⇒ Page 13-11 .
- Remove toothed camshaft drive belt ⇒ Page 13 .
- Remove crankshaft drive belt sprocket by locking sprocket with tool 3099.
- Turn inner part of seal puller 2085 out two tu (approx. 3 mm) from outer part and lock with knurled screw.

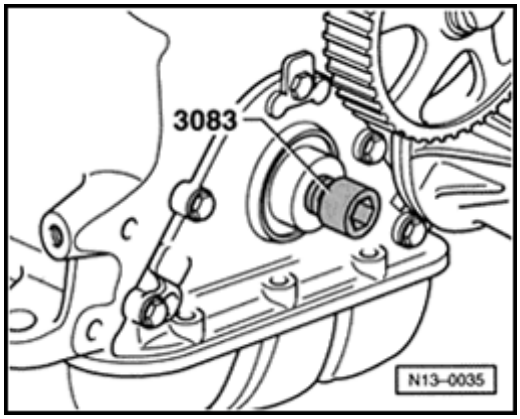

- To guide seal puller, screw threaded part of 3083 into crankshaft to stop.

13-22

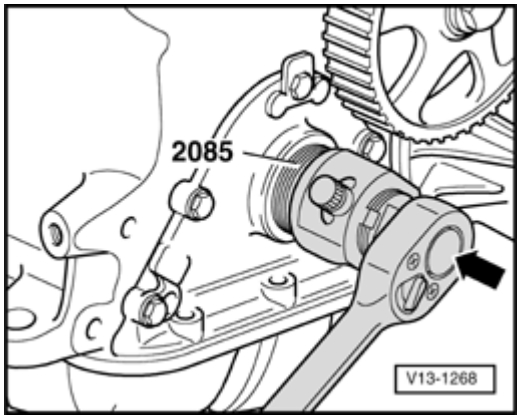

- Lubricate threaded head of seal puller 2085, place in position and screw into seal as far as possible by applying pressure in direction of arrow.
- Loosen knurled screw and turn inner part against crankshaft until the oil seal is pulled out.

Installing

- Lightly oil sealing lip.

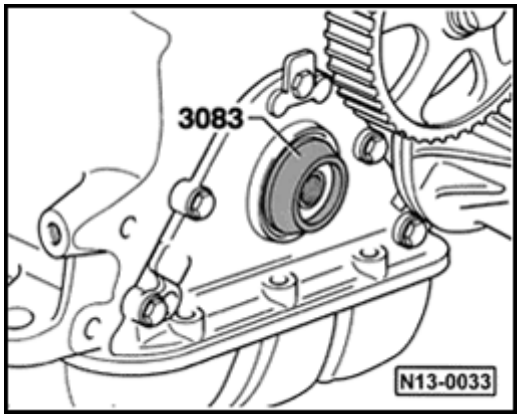

- Install guide sleeve from 3083 on crankshaft.
- Slide seal on over guide sleeve.

13-23

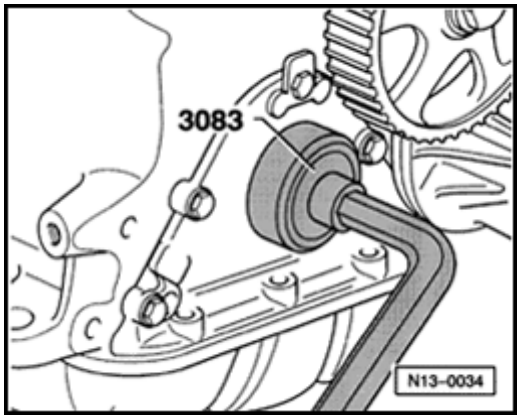

- Press seal in to stop with 3083.
- Install drive belt and adjust tension ⇒ Page 13-13

13-24

Drive plate, removing and installing

Special tools, testers and auxiliary items

- Holding tool VW 558
- M8x45 hex bolt and two M10 hex nuts
- Depth gauge

Loosening and tightening drive plate

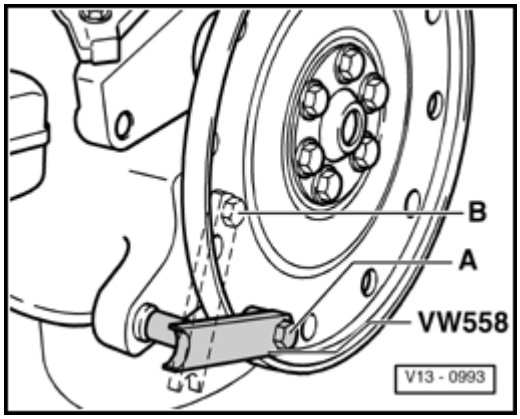

- Fasten holding tool VW 558 to driveplate with hex bolt M8x45.

A - To loosen mounting bolts

B - To tighten mounting bolts

- Install two M10 nuts between holding tool and driveplate.

13-25

Installing

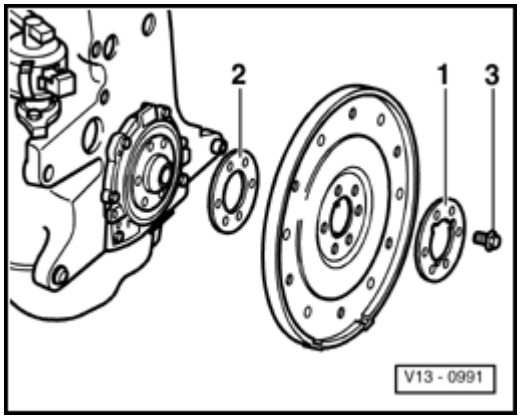

- Install driveplate using washer with cut-outs -1-.
- Install new bolts -3- and tighten to 30 Nm (22 ft lb).

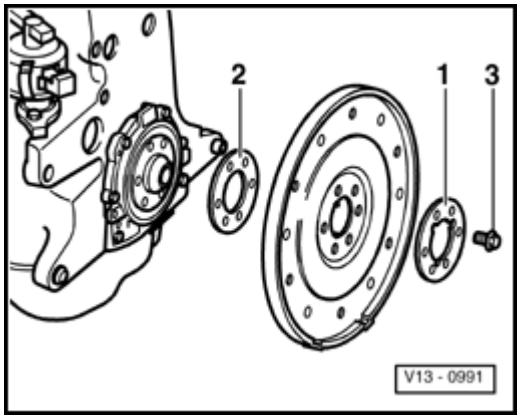

- Check clearance between drive plate and cylinder block at three points and calculate average value.

  Dimension -a-: 19.5-21.1 mm (0.768-0.831 in.)

13-26

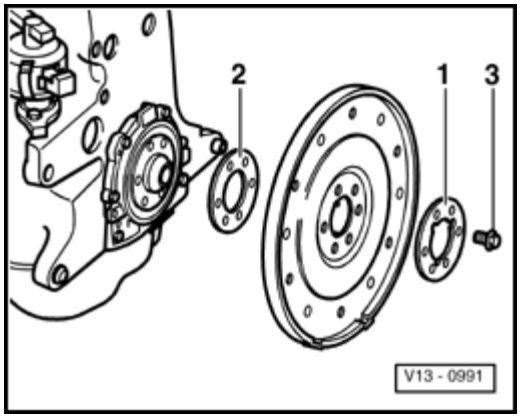

If clearance dimension is NOT as specified:

- Remove drive plate and install shim -2-.
- Install and tighten bolts -3- in three stages.

  Stage I: 30 Nm (22 ft lb)

  Stage II: 60 Nm (44 ft lb)

  Stage III: additional $^{1}/_{4}$ -turn (90 °)

13-27

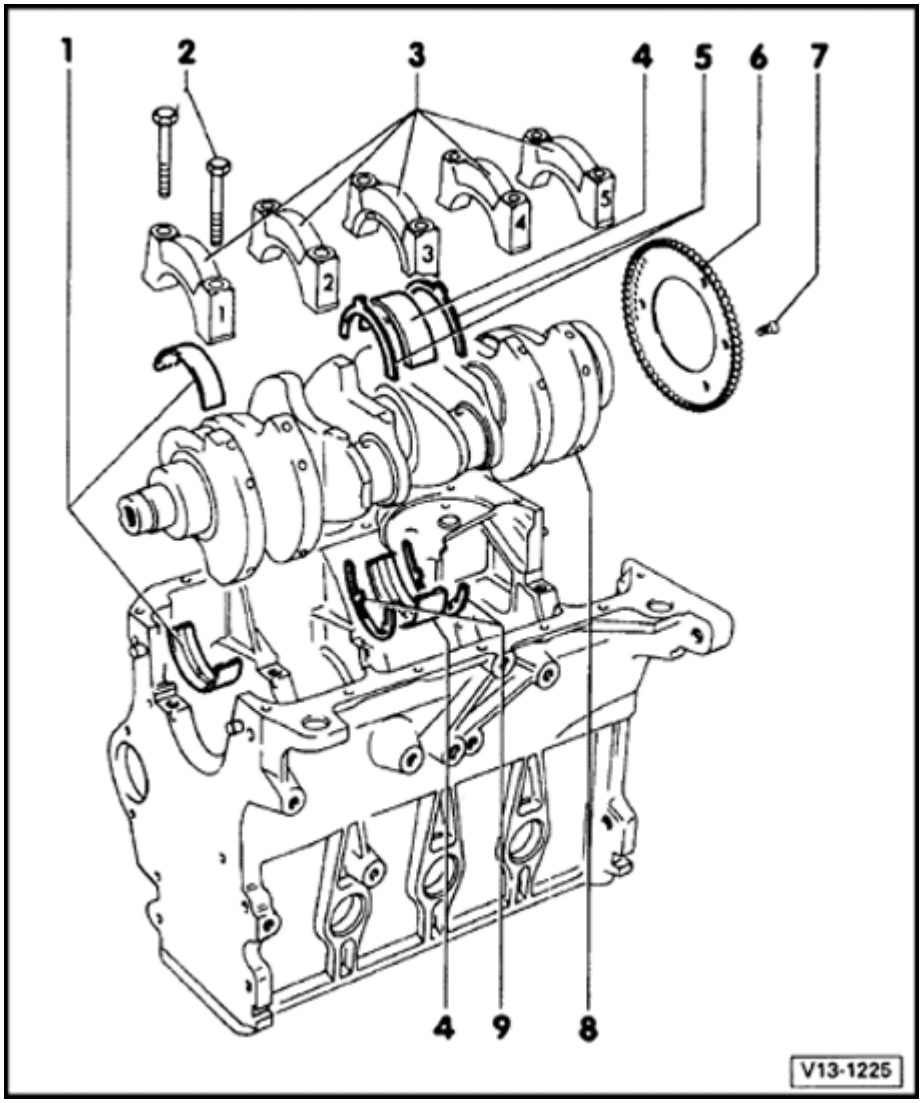

Crankshaft, removing and installing

1 - Main bearing shells 1, 2, 4 and 5

- Without oil groove: for main bearing caps 1, 2 and 5
- With oil groove: for main bearing cap 4 and for cylinder block

- Do not interchange worn main bearing shells

2 - 65 Nm (48 ft lb) plus additional $^{1}/_{4}$ -turn (90 °)

- To measure radial clearance: tighten to 65 Nm (48 ft lb)

only, NOT additional $^{1}/_{4}$ turn (90°)

3 - Main bearing caps

- Main bearing cap 1: pulley end
- Main bearing cap 3 has recesses for thrust washers - 5 -
- Holding tabs on bearing shells in cylinder block and main bearing cap must face each other

13-28

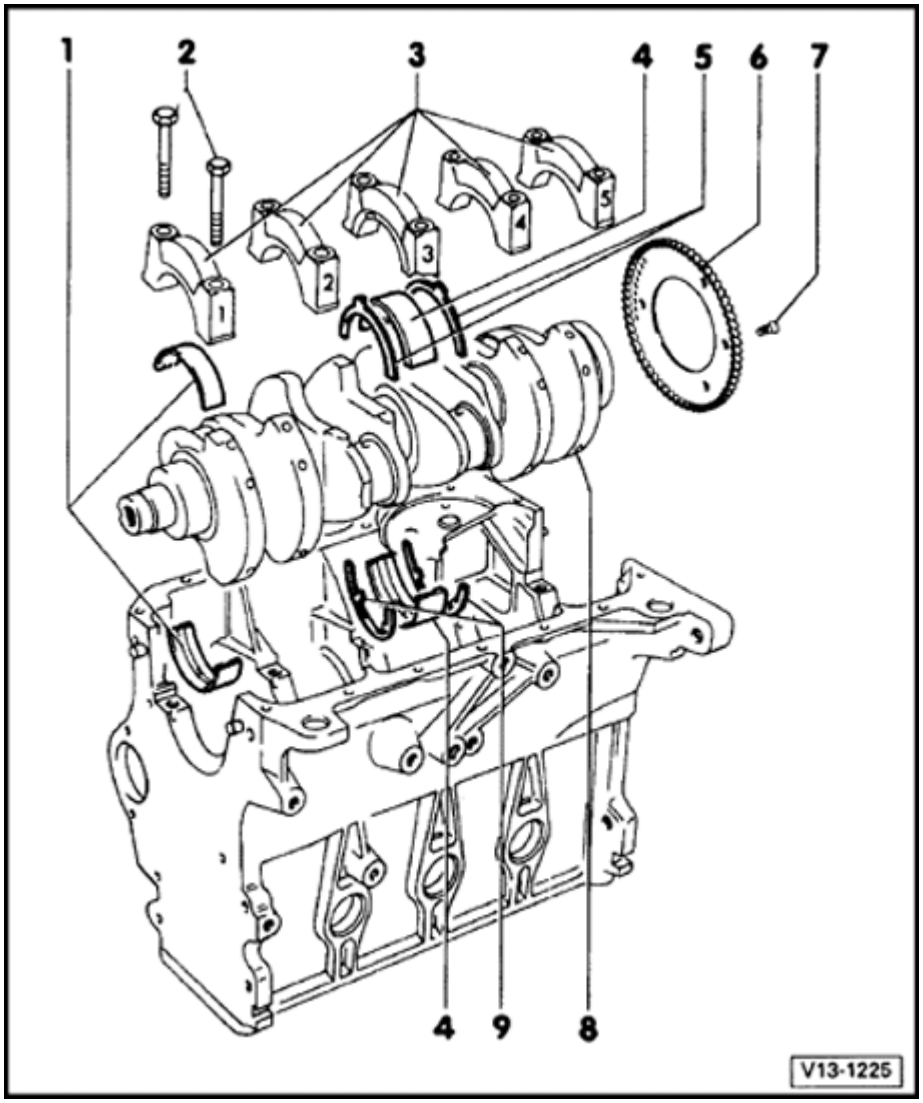

4 - Main bearing shell 3

- Without oil groove: for main bearing cap
- With oil groove: for cylinder block

5 - Thrust washer

- For main bearing cap 3
- Note installation position

6 - Sensor gear

- For RPM sensor G28
- Always replace

7 - 10 Nm (7 ft lb) plus additional $^1/_4$ -turn (90 °)

- Always replace

13-29

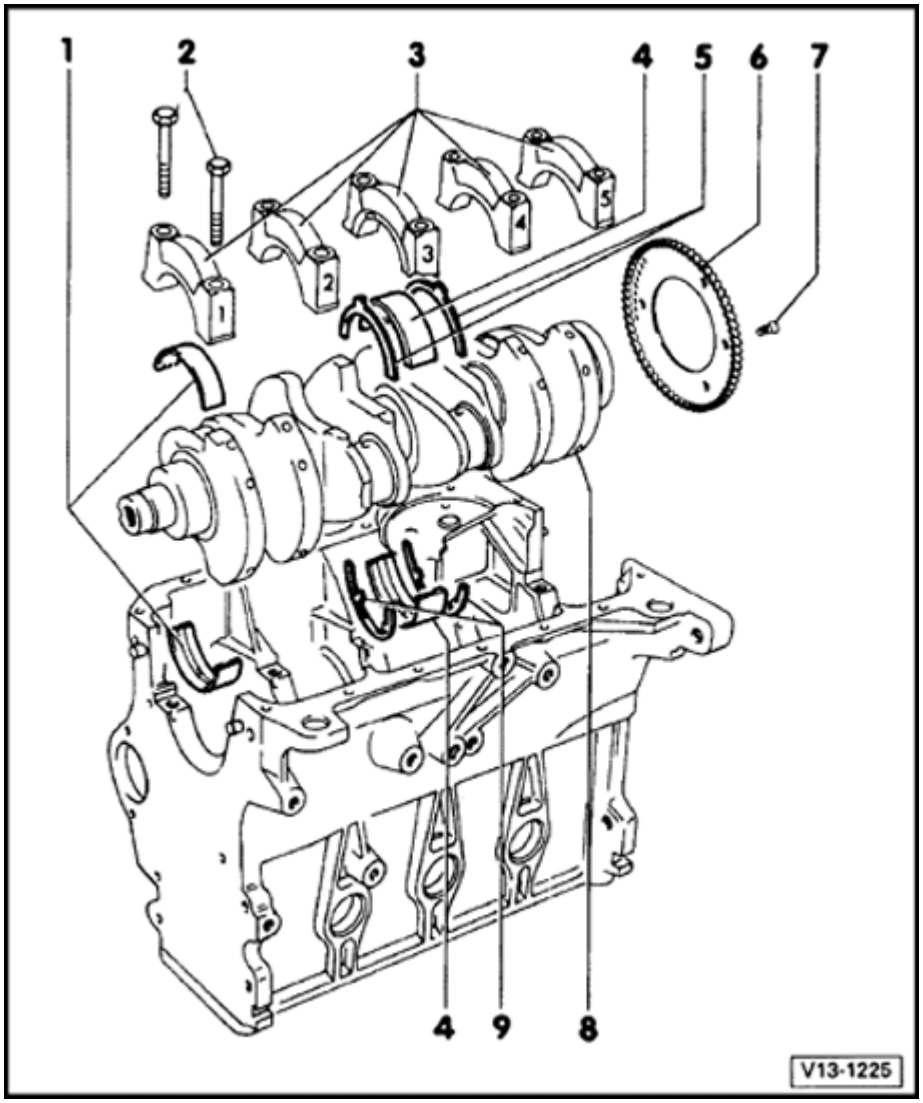

8 - Crankshaft

- Dimensions ⇒ Page 13-30

  Axial clearance:

  - New: 0.07-0.17 mm (0.0028-0.0067 in.)
  - Wear limit: 0.25 mm (0.00984 in.)

  Radial clearance:

- Measure Plastigage®
  - New: 0.02-0.06 mm (0.0008-0.0024 in.)
  - Wear limit: 0.17 mm (0.0067 in.)

CAUTION!

DO NOT turn crankshaft while measuring radial clearance.

9 - Thrust

washer

- For cylinder block bearing 3

Crankshaft dimensions

Reconditioning dimension	Crankshaft journal diameter - mm (in.)	Connecting rod journal diameter - mm (in.)
maximum	-0.022 (0.00087)	-0.022 (0.00087)
Basic dimension (nominal)	-54.00 (2.1260)	-47.80 (1.8819)
minimum	-0.042 (0.00165)	-0.042 (0.00165)
maximum	-0.022 (0.00087)	-0.022 (0.00087)
1st undersize (nominal)	-53.75 (2.1161)	-47.55 (1.8720)
minimum	-0.042 (0.00165)	-0.042 (0.00165)
maximum	-0.022 (0.00087)	-0.022 (0.00087)
2nd undersize (nominal)	-53.50 (2.1063)	-47.30 (1.8622)
minimum	-0.042 (0.00165)	-0.042 (0.00165)
maximum	-0.022 (0.00087)	-0.022 (0.00087)
3rd undersize (nominal)	-53.25 (2.0965)	-47.05 (1.8524)
minimum	-0.042 (0.00165)	-0.042 (0.00165)

13-31

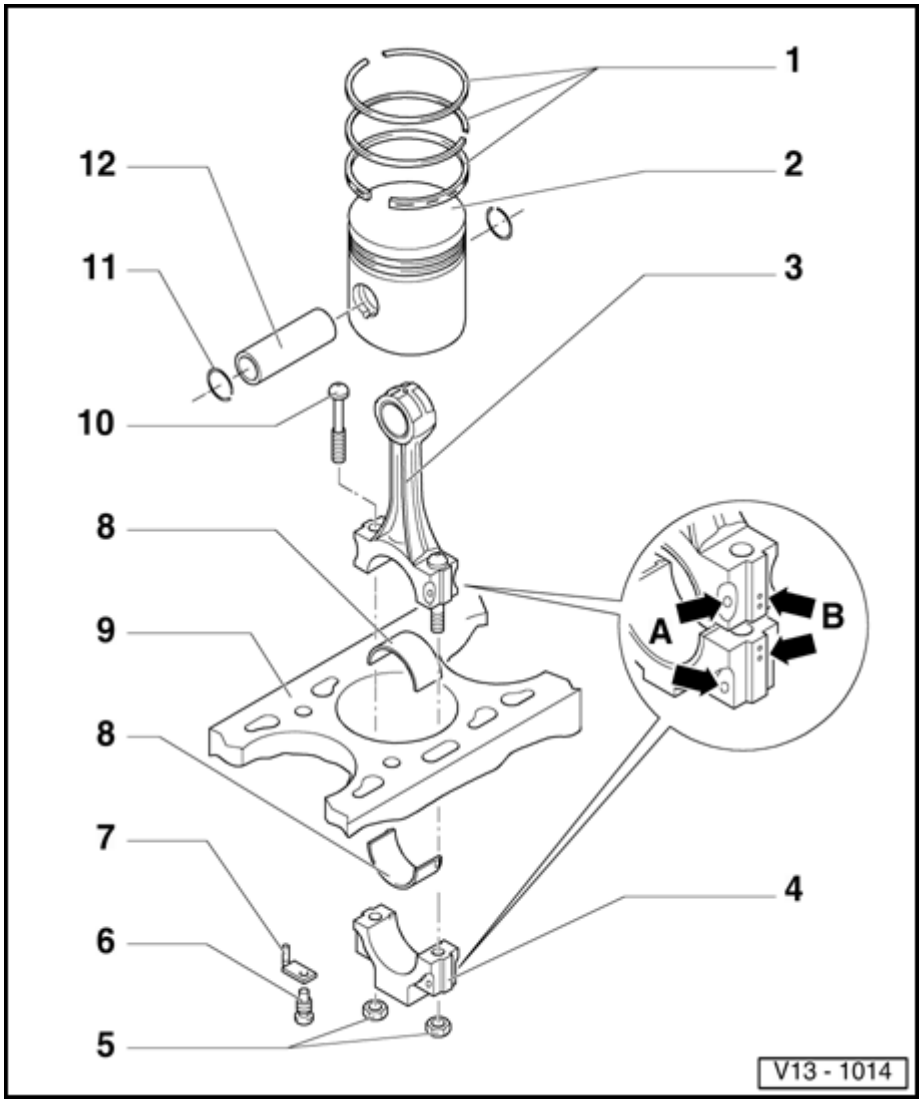

Pistons and connecting rods, disassembling and assembling

1 - Piston ring

- Offset gaps by 120 °
- Remove and install with piston ring pliers
- "TOP" marking faces toward piston crown
- Checking ring gap ⇒ Fig. 1
- Checking ring/groove clearance ⇒ Fig. 2

2 - Piston

- Checking ⇒ Fig. 3
- Mark installation position and cylinder number
- Arrow on piston crown points toward pulley end
- Install only with piston ring

compressor

- Dimensions ⇒ Fig. 4

3 - Connecting rod

- With oil supply hole for piston pin lubrication
- Replace only as complete set
- Installation position: marking -A- points toward pulley end
- Make matching marks -B- for cylinder number

13-32

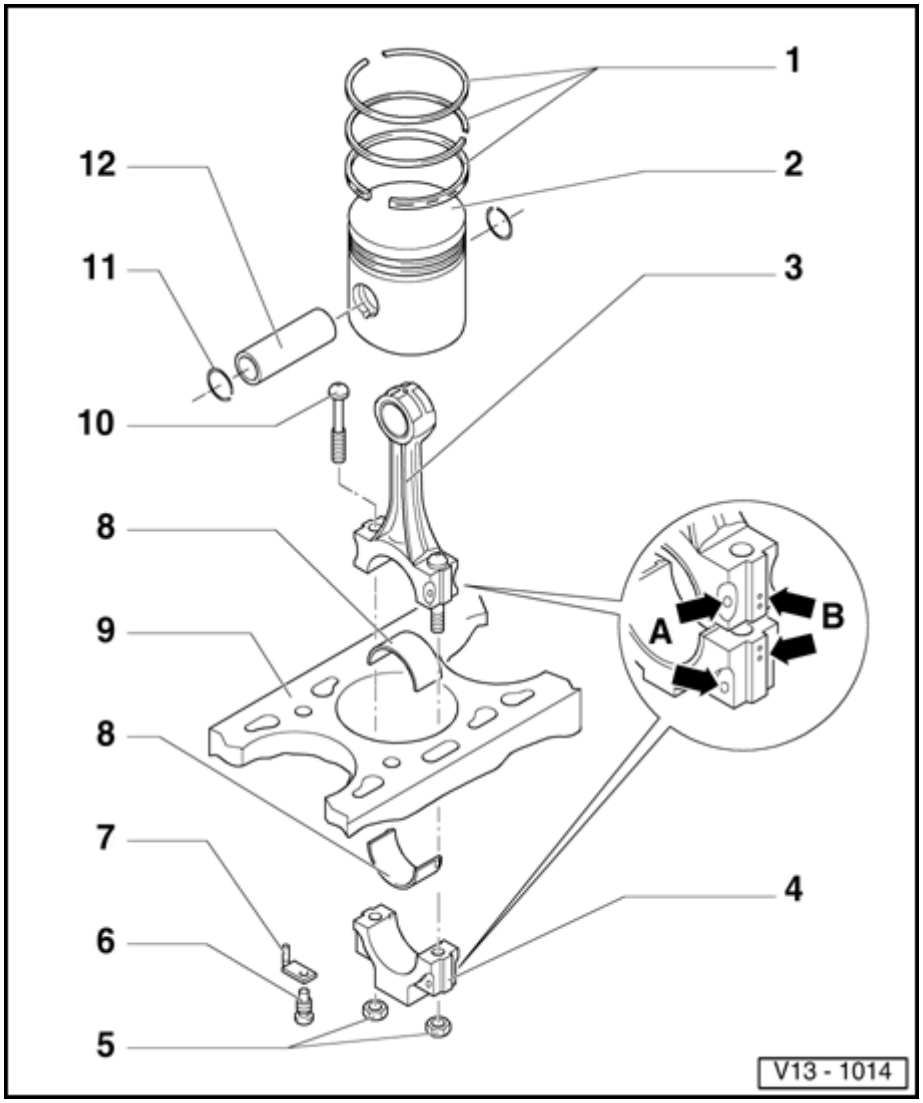

4 - Connecting rod bearing cap

- Note installation position

5 - 30 Nm (22 ft lb) plus additional $^{1}/_{4}$ -turn (90 °)

- Oil threads and contact surface
- Measuring radial clearance: tighten to 30 Nm (22 ft lb) only, NOT additional $^{1}/_{4}$ -turn (90 °)

CAUTION!

DO NOT turn crankshaft while measuring radial clearance.

6 - Pressure relief valve

- Tightening torque: 27 Nm (20 ft lb)

- Opening pressure: 2.5-3.2 bar (36-46 psi)
- Not applicable from 04.95

7 - Oil spray jet

- For piston cooling
- Not applicable from 04.95

13-33

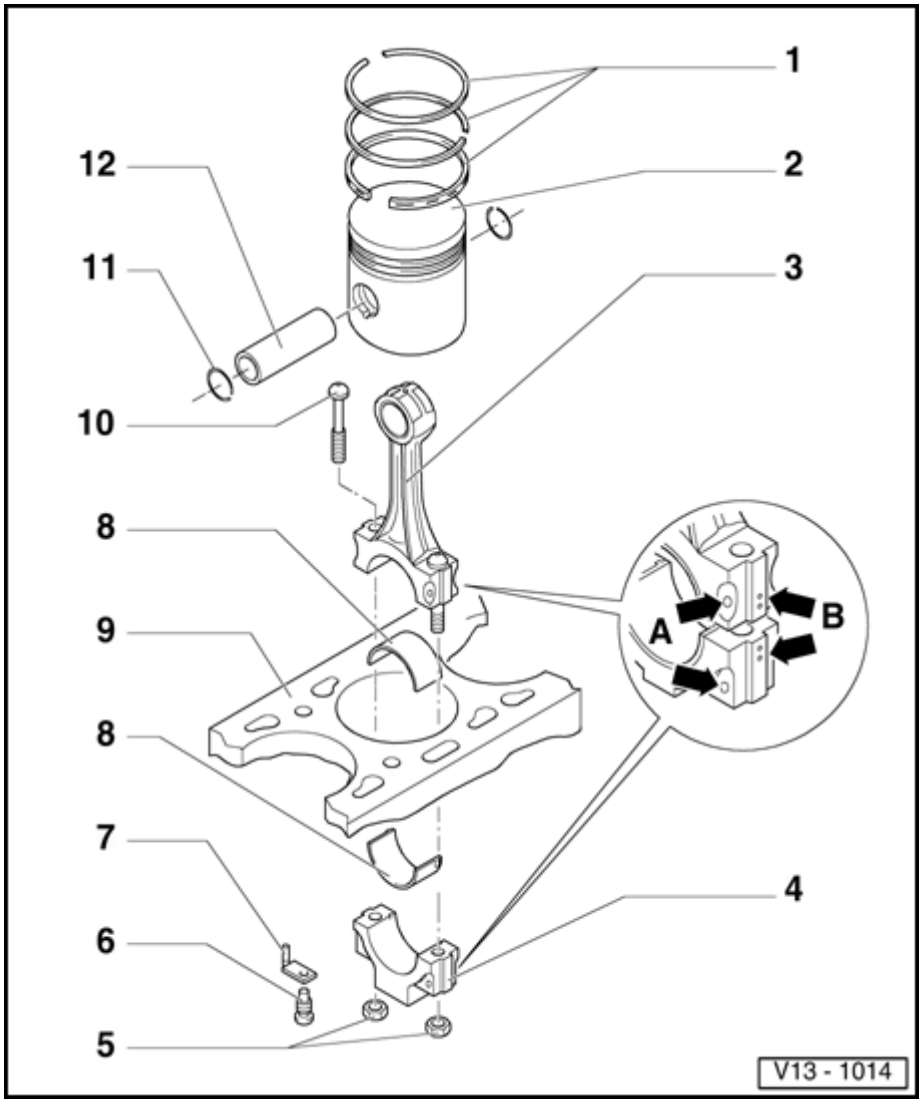

8 - Bearing shell

- Note installation position
- Shells with oil hole are installed in connecting rod - 3 -, face toward piston pin
- Do not interchange worn bearing shells
  - Check to make sure holding tabs seat correctly

Axial clearance:

- New: 0.05-0.31 mm (0.0020-0.0122 in.)
- Wear limit: 0.37 mm (0.0146 in.)

Radial clearance:

Measure

- with Plastigage®
  - New: 0.01-0.06 mm (0.0004-0.0024)
  - Wear limit: 0.12 mm (0.0047)

CAUTION!

DO NOT turn crankshaft while measuring radial clearance.

13-34

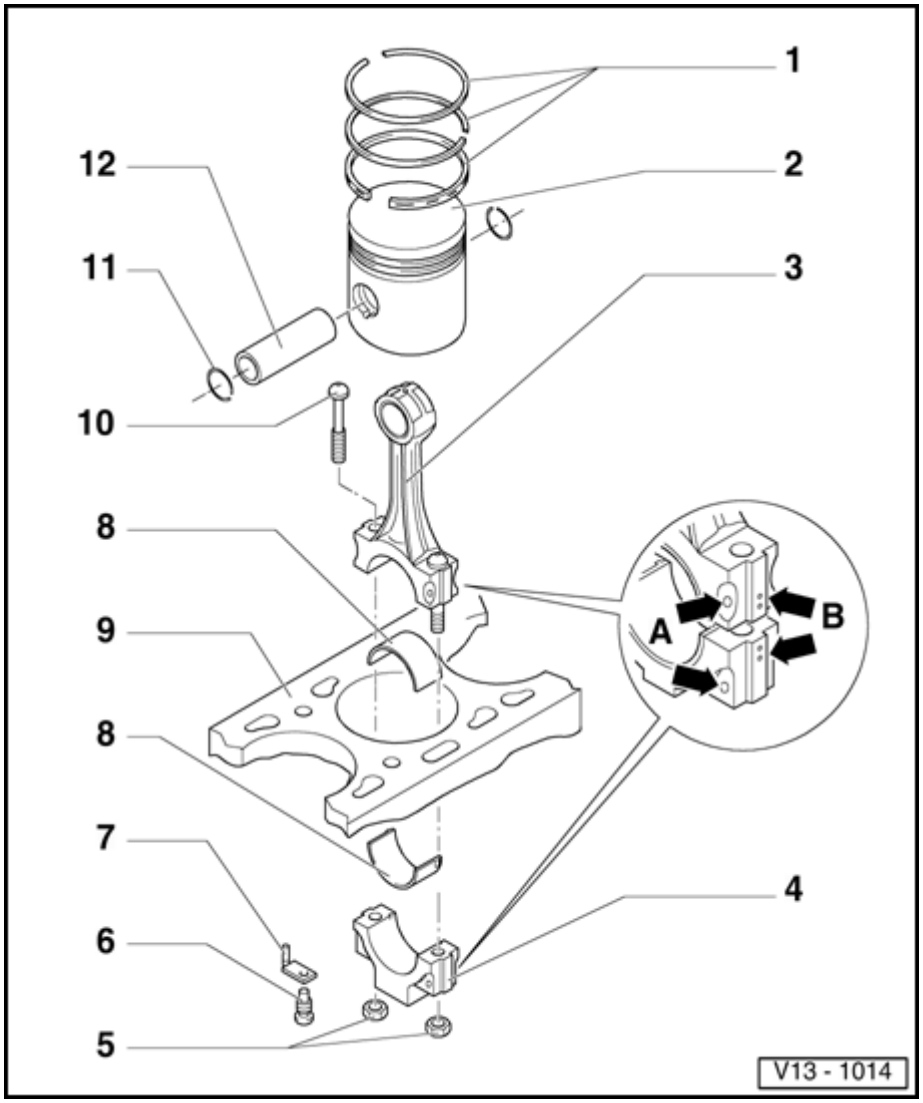

9 - Cylinder block

- Checking cylinder bore diameter ⇒ Fig. 5
- Piston and cylinder dimensions ⇒ Page 13-39

10 - Connecting rod bolt

11 - Circlip

12 - Piston pin

- If difficult to remove, warm piston to 60 °C (140 °F)
- Remove and install with drift VW 222a

13-35

Special tools, testers and auxiliary items

- Feeler gauges
- Internal dial gauge 50-100 mm
- Micrometer 75-100 mm

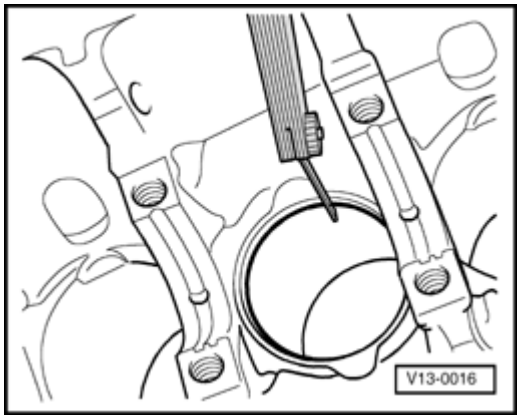

Fig. 1 Checking piston ring gap

- Squarely insert piston ring into cylinder from above, to approx. 15 mm ($^5/_8$ in.) from bottom of cylinder.

Piston ring	Ring gap - mm (in.)	
	New	Wear limit
Compression ring	0.20-0.40 (0.0078-0.0157)	1.0 (0.039)
Oil scraper ring	0.25-0.50 (0.0098-0.0197)	1.0 (0.039)

13-36

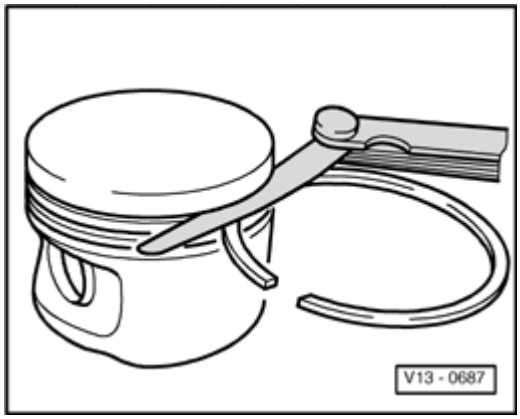

Fig. 2 Checking piston ring/groove clearance

- Clean ring groove before measuring.

Piston ring	Side clearance - mm (in.)	
	New	Wear limit
Compression ring	0.02-0.05 (0.0008-0.0020)	0.15 (0.0059)
Oil scraper ring	0.02-0.05 (0.0008-0.0020)	0.15 (0.0059)

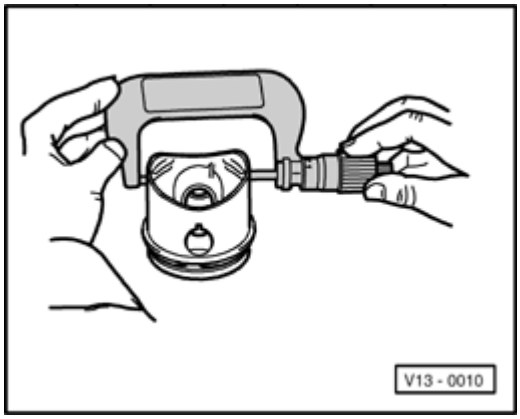

Fig. 3 Checking piston wear

- Measure approx. 10 mm (0.4 in.) from lower edge of piston skirt at right angle (90 °) to piston pin.

◆ Maximum deviation from nominal diameter: 0.04 mm (0.0016 in.)

13-37

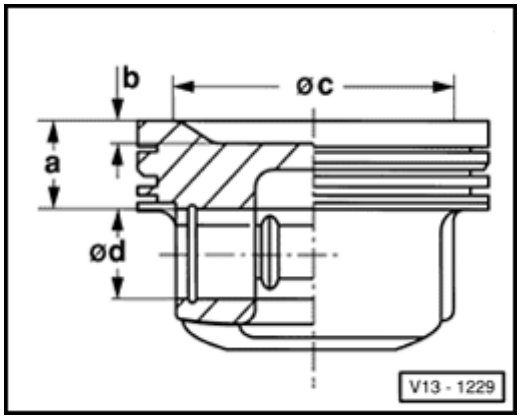

Fig. 4 Piston dimensions

Engine code	ABA up to 04.95	ABA from 04.95
Dimension -a- mm (in.)	19.1 (0.752)	20.1 (0.791)
Dimension -b- mm (in.)	7.1 (0.279)	7.1 (0.279)
Recess diameter -c- mm (in.)	66.5 (2.618)	65.0 (2.559)
Piston pin bore diameter -d- mm (in.)	21.0 (0.827)	21.0 (0.827)

Note:

Only pistons and piston rings of the same type and pistons of the same weight class may be installed.

13-38

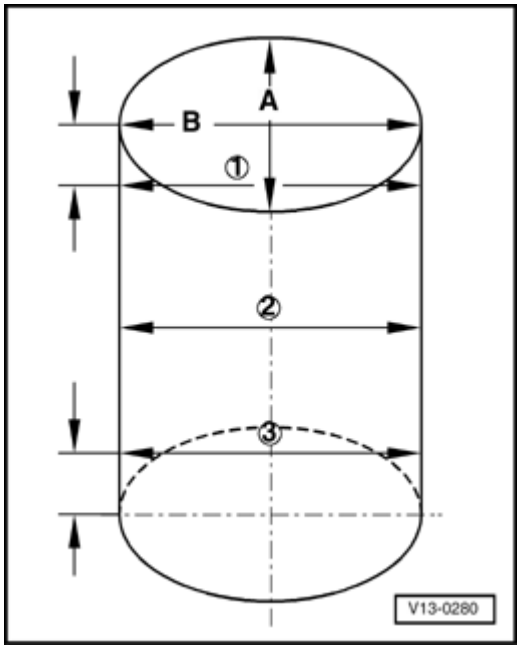

Fig. 5 Cylinder bore, checking

- Use 50-100 mm internal micrometer.
- Measure in direction -A- perpendicular to crankshaft, and direction -B- parallel to crankshaft.
- Measure in three places as shown.

1 - 10 mm (0.39 in.) from top

2 - Center

3 - 10 mm (0.39 in.) from bottom

Max. deviation from nominal diameter: 0.08 mm (0.0015 in.)

CAUTION!

DO NOT measure cylinder bore when cylinder block is mounted in engine stand VW 540. Measurement accuracy can be affected by cylinder block distortion as it hangs down from the engine stand.

13-39

Piston and cylinder dimensions

Piston and cylinder dimensions up to04.95

Reconditioning dimension	Piston diameter mm (in.)	Cylinder bore diameter - mm (in.)
Basic dimension	82.485 (3.24744)	82.51 (3.2484)
1st oversize	82.735 (3.25728)	82.76 (3.2583)
2nd oversize	82.985 (3.26713)	83.01 (3.2681)

Piston and cylinder dimensions from 04.95

Reconditioning dimension	Piston diameter [1] mm (in.)	Cylinder bore diameter - mm (in.)
Basic dimension	82.470 (3.24685)	82.51 (3.2484)
1st oversize	82.720 (3.25669)	82.76 (3.2583)
2nd oversize	82.970 (3.26654)	83.01 (3.2681)

[1] This dimension is stamped on the piston crown. Note that the diameter measured will be 0.015 mm (0.00059 in.) larger than this dimension because of phosphate layer

15-1

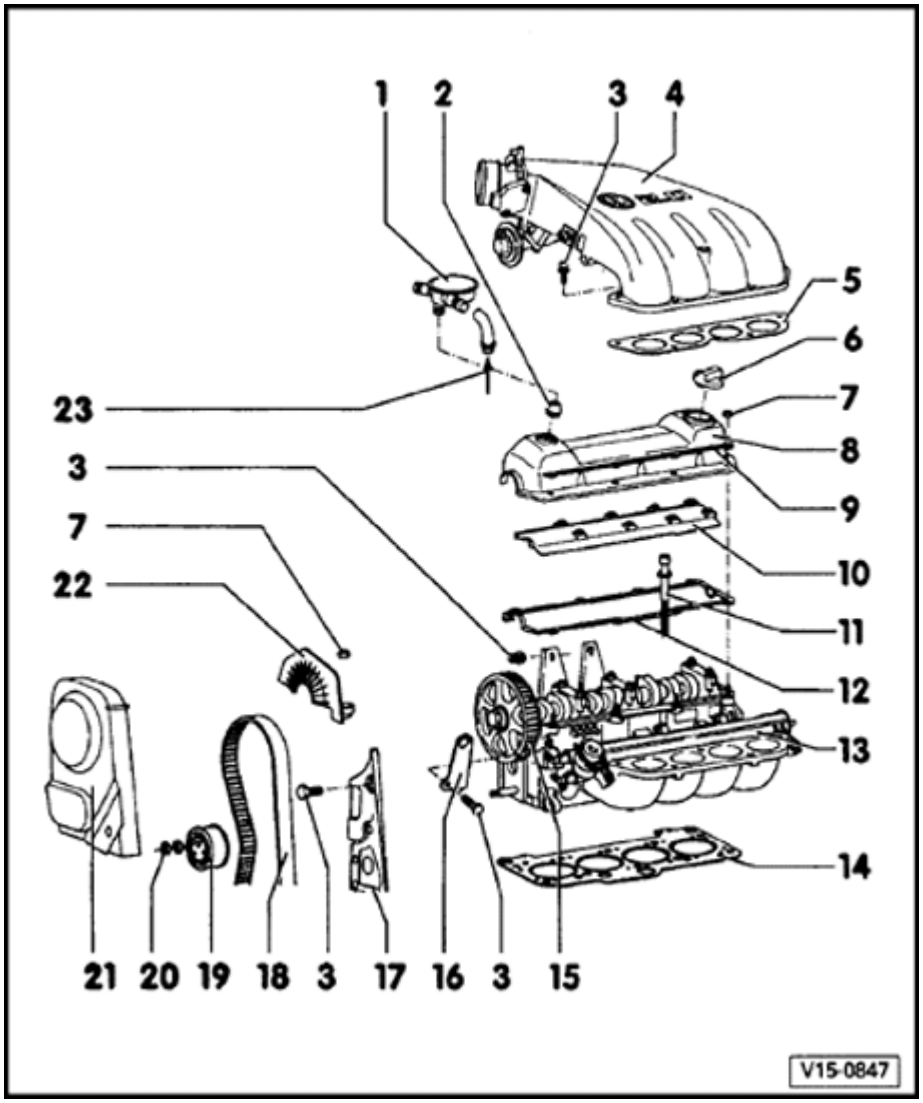

Cylinder head removal and installation

Checking compression pressures ⇒ Page 15-8

Note:

- *When installing a reconditioned cylinder head, oil the contact surfaces between valve lifters and cam lobes after installing the head.*
- *Remove plastic washers that are supplied to protect the open valves only before actually installing the cylinder head.*
- *When replacing the cylinder head, replace the engine coolant.*

15-2

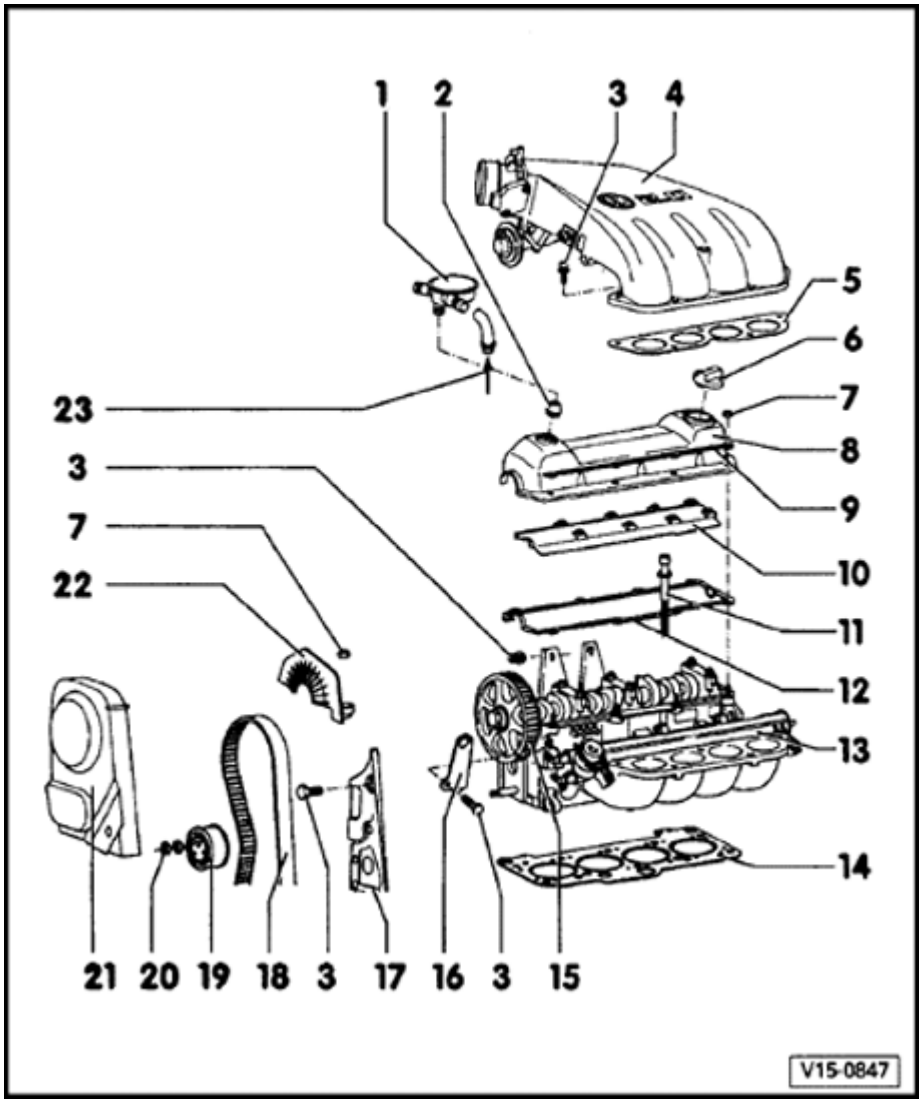

1 - Positive Crankcase Ventilation (PCV) valve

2 - Grommet

3 - 20 Nm (15 ft lb)

4 - Intake manifold, upper

5 - Gasket

- Always replace

6 - Cap

- Replace gasket if damaged

7 - 10 Nm (7 ft lb)

8 - Cylinder head cover

9 Reinforcement - strip

10 - Oil deflector

15-3

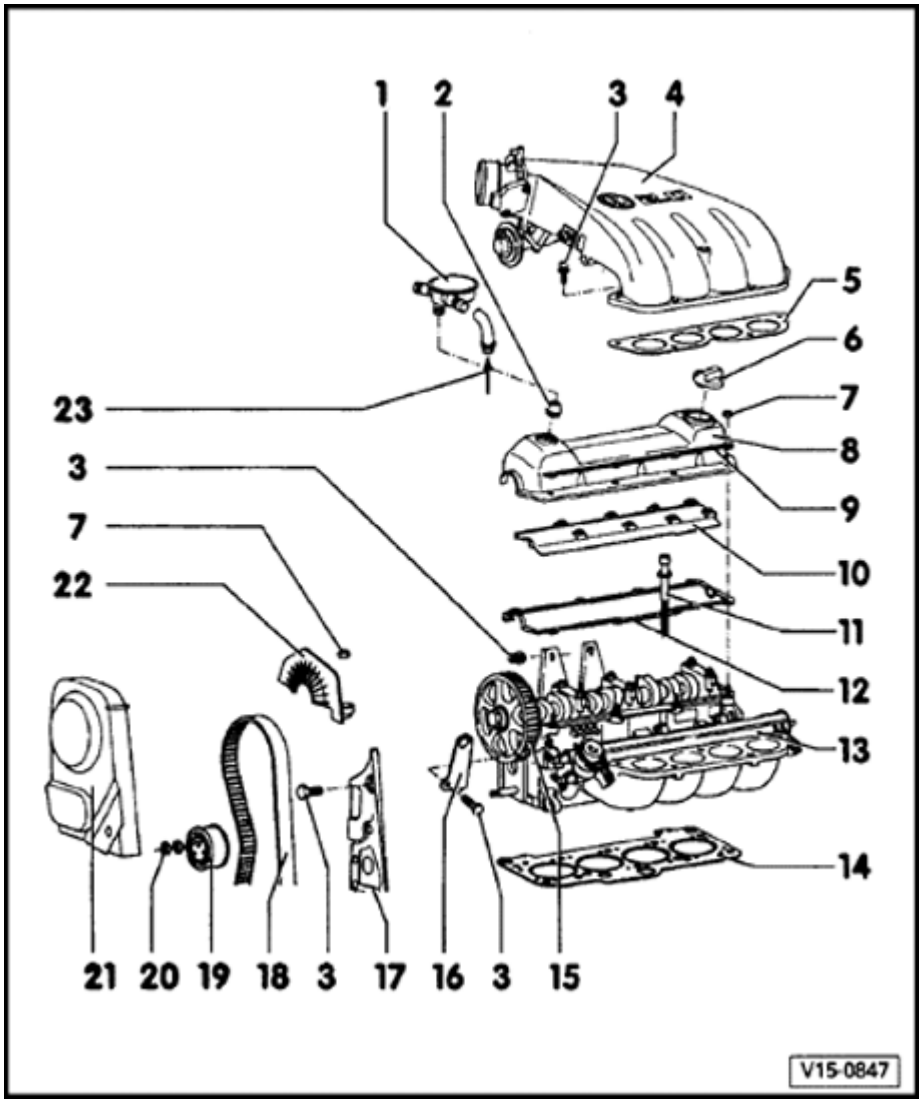

11 - Cylinder head bolt

- Always replace
- Loosening and tightening sequence ⇒ Page 15-6

12 - Gasket

- Always replace

13 - Cylinder head

- Installing ⇒ Page 15-6
- Check for distortion ⇒ Fig. 1
- When replacing, always replace engine coolant

14 - Cylinder head gasket

- Always replace
- When replacing, always replace engine coolant

15 - Camshaft sprocket

- Note position when installing drive belt ⇒ Page 13-13

16 - Hook eye

15-4

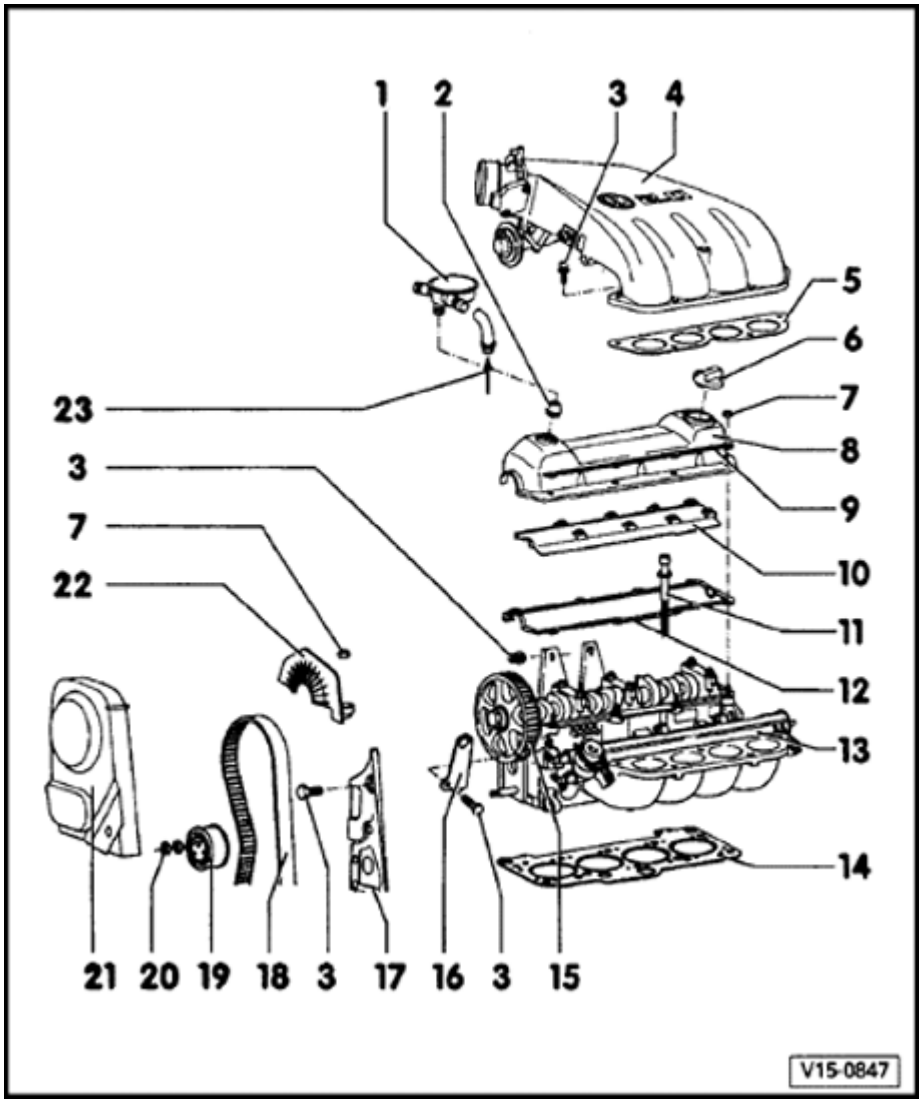

17 - Drive belt guard, rear

18 - Toothed drive belt

- Check for wear
- Do not kink
- Removing and installing ⇒ Page 13-13

19 - Belt tensioner

20 - 45 Nm (33 ft lb)

21 - Drive belt guard, upper

22 - Drive belt guard

23 - From crankcase breather

- ⇒ Page 13-8 , Item 13

15-5

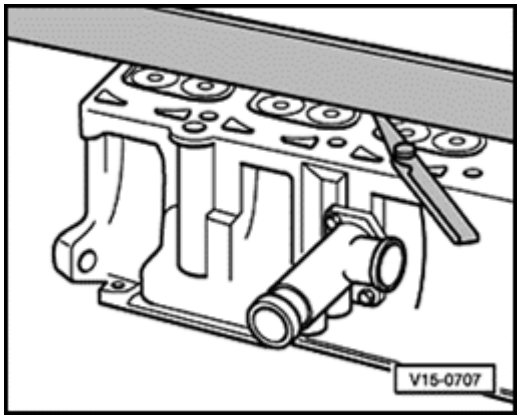

Fig. 1 Checking cylinder head for distortion

- Max. permissible distortion: 0.1 mm (0.004 in.)

15-6

Cylinder head, installing

Special tools, testers and auxiliary items

- Torque wrench VAG 1332 (40-200 Nm)
- Guide pin 3070

Requirements

- Engine cold
- Pistons NOT at Top Dead Center (TDC)

Installing

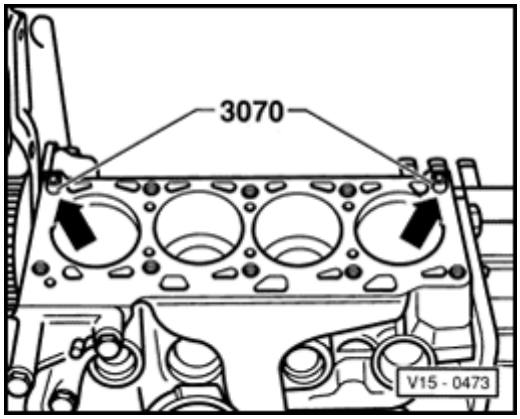

- To align cylinder head, install guide pins from tool 3070 into holes for cylinder head bolts 8 and 10 (arrows).
- Install cylinder head gasket.
- Install cylinder head (note centering pins in cylinder block).
- Install remaining cylinder head bolts and tighten by hand.
- Remove guide pins from tool 3070, insert cylinder head bolts 8 and 10, and tighten by hand.

15-7

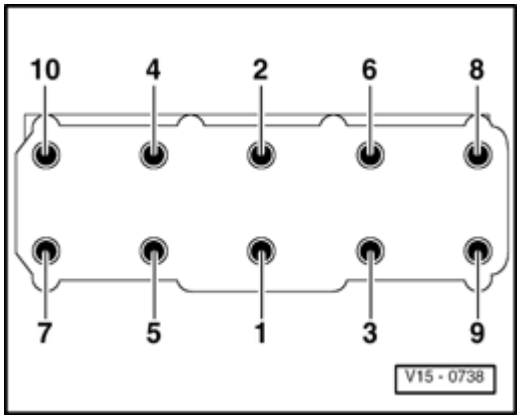

- Tighten cylinder head bolts in sequence shown, following same sequence for each of four stages.

Note:

To loosen cylinder head bolts, follow the same sequence in reverse order.

- First tighten with torque wrench.
  - Stage I = 40 Nm (30 ft lb)
  - Stage II = 60 Nm (44 ft lb)
- Then turn further with standard wrench.
  - Stage III = $^1/_4$ -turn (90 °)
  - Stage IV = additional $^1/_4$ -turn (90 °)

Note:

After the repairs are complete, no additional re-torquing steps are necessary.

15-8

Compression pressure, checking

Special tools, testers and auxiliary items

- Compression tester US 1120

Test conditions

- Engine oil temperature min. 30 °C (86 °F)

- Disconnect harness connector for engine speed (RPM) sensor G28.

- Disconnect ignition coil power output stage N157.

- Open throttle all the way (wide open throttle).

- Install compression tester US 1120.

Note:

Using the compression tester ⇒ Operating instructions.

- Operate starter until compression tester gauge shows no further pressure increase.

Compression pressure specifications

- New: 10-13 bar (145-189 psi)

- Wear limit: 7.5 bar (109 psi)

- Permissible difference between all cylinders: 3 bar (44 psi)

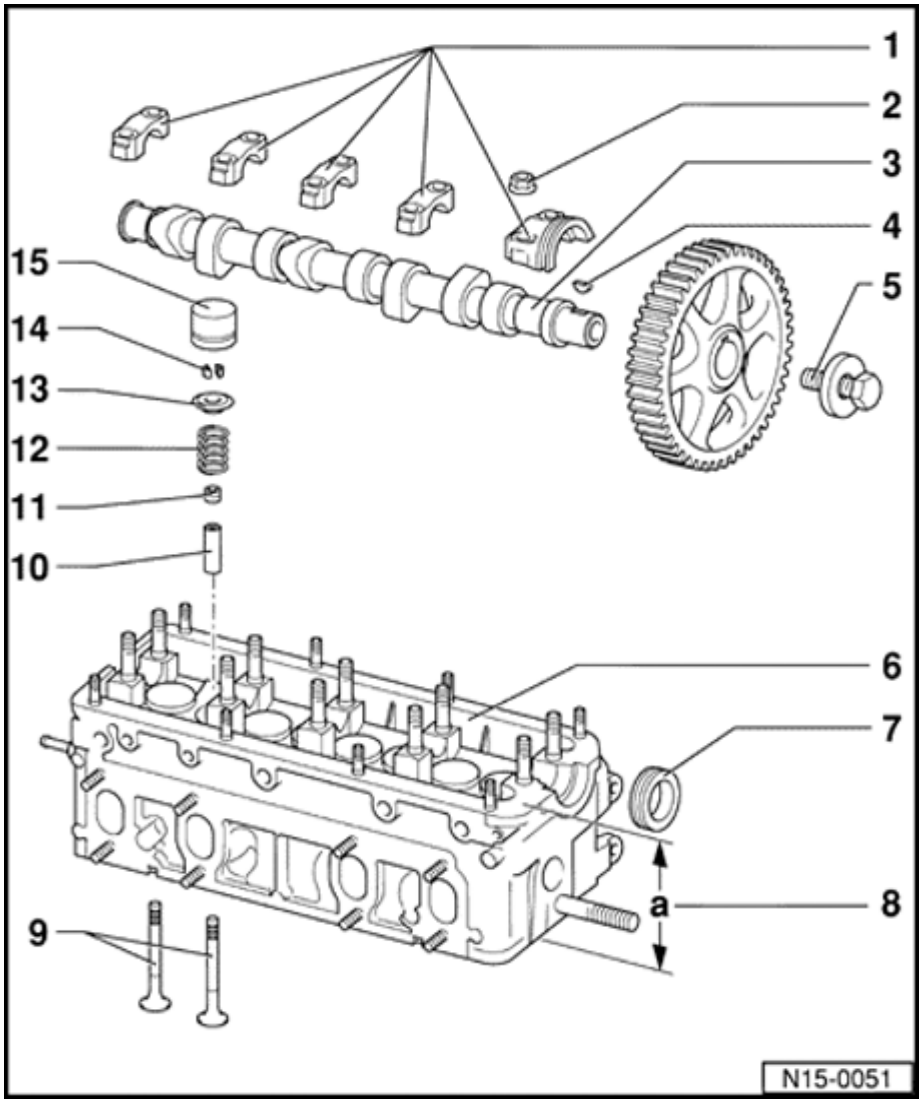

Cylinder head disassembling and assembling

Note:

Cylinder heads with cracks between the valve seats or between a valve seat and the spark plug threads can be used without decreasing the service life. Also cracks at the first few threads of the spark plug thread are permissible. Cracks may not be wider than 0.5 mm (0.020 in.).

1 - Bearing cap

- Installation position ⇒ Fig 2
- Installation sequence ⇒ Page 15-22

2 - 20 Nm (15 ft lb)

15-10

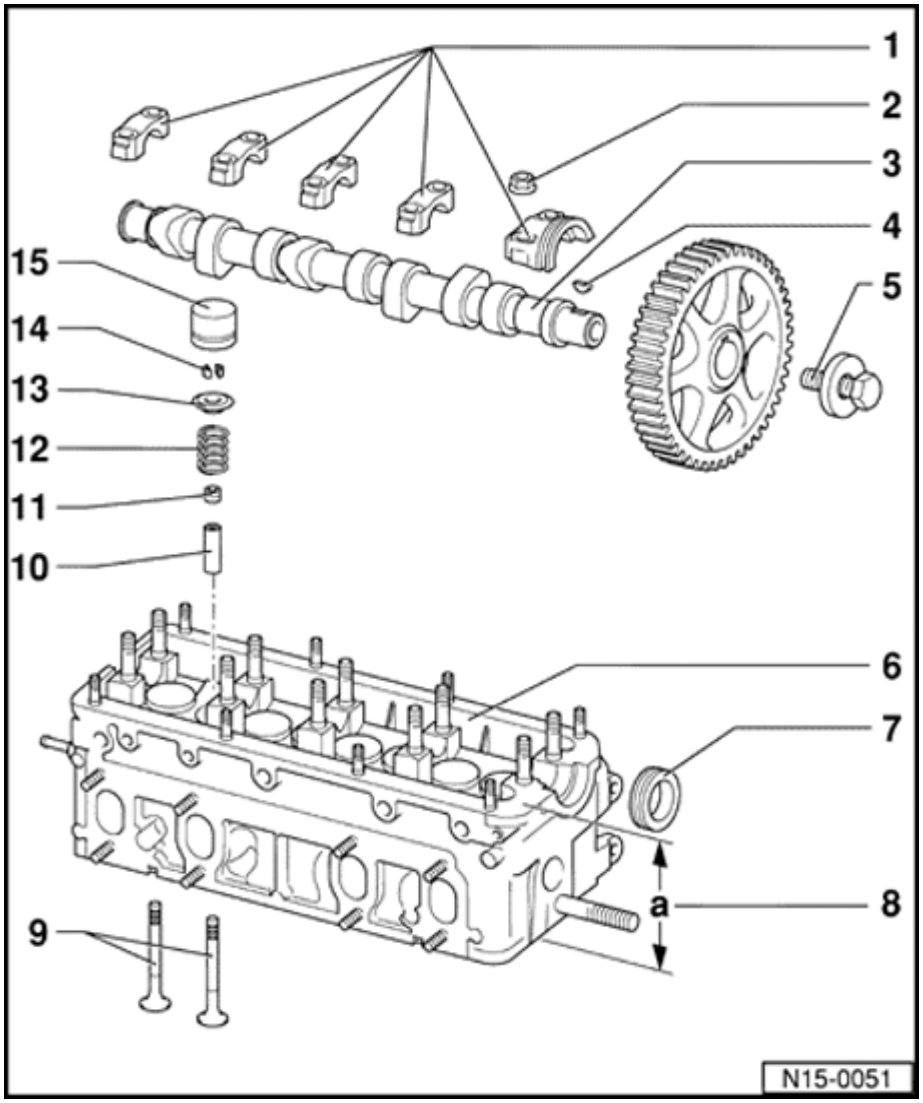

3 - Camshaft

- Axial play, checking ⇒ Fig. 1
- Removing and installing ⇒ Page 15-22
- Check radial clearance with Plastigage®
  - Wear limit: 0.1 mm (0.004 in.)
  - Runout: max. 0.01 mm (0.0004 in.)
- Identification and valve timing specifications ⇒ Fig. 5
- Undersize camshaft for replacement cylinder head with camshaft bearing shells ⇒ Fig. 3

4 - Woodruff key

- Check for tight fit

5 - 80 Nm (60 ft lb)

- Use holding tool 3036 to loosen and tighten

6 - Cylinder head

- Replacement cylinder heads with camshaft bearing shells ⇒ Fig. 3
  - See Note ⇒ Page 15-9
  - Valve seats, refacing ⇒ Page 15-17

7 - Oil seal

- Replacing ⇒ Page 15-20

15-11

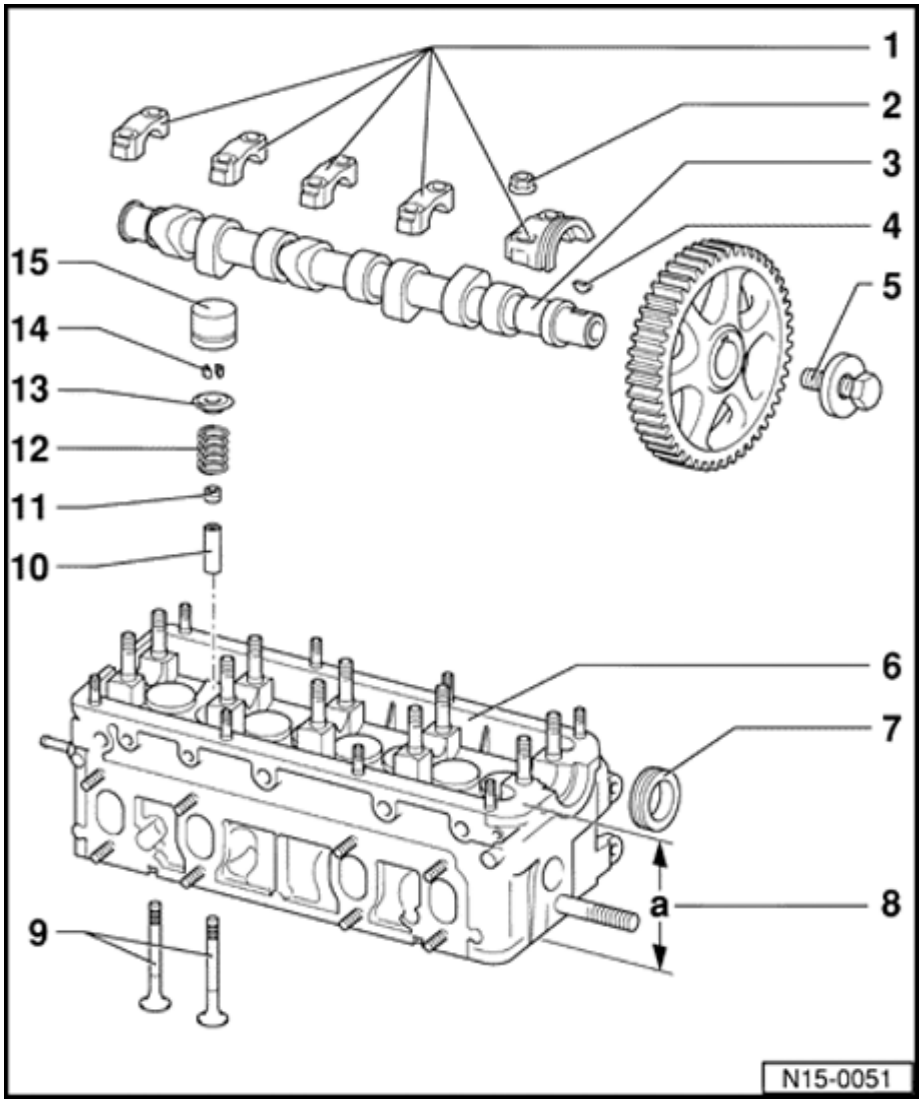

8 - Cylinder head refacing dimension

- Minimum height -a- = 132.6 mm (5.220 in.)

9 - Valves

- DO NOT reface by cutting or grinding, only hand-lapping is permitted
- Valve dimensions ⇒ Fig. 4

10 - Valve guide

- Replacement valve guides supplied with shoulder
  - Checking ⇒ Page 15-27
  - Replacing ⇒ Page 15-28

11 - Valve seal

- Replacing ⇒ Page 15-29
- Remove

and install with 3047A

12 - Valve spring

- Removing and installing with cylinder head removed: use valve spring compressor 2037
  - Removing and installing with cylinder head installed ⇒ Page 15-29

13 - Valve spring seat, upper

15-12

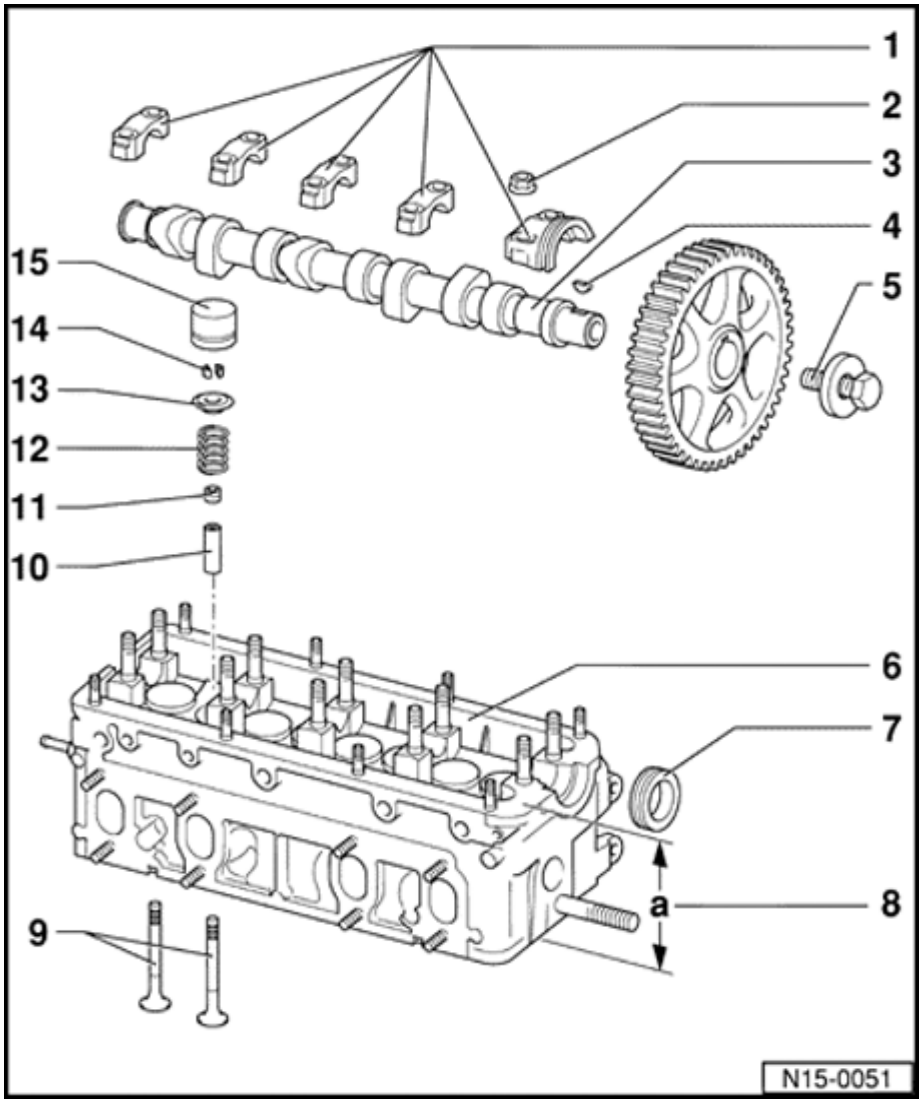

14 - Valve keepers

15 - Hydraulic valve lifters

- Do not interchange
  - Checking ⇒ Page 15-25
  - When removed, store with camshaft contact surface pointing downward
  - Before installing check camshaft axial play ⇒ Fig. 1
  - Installing: oil camshaft contact surface

15-13

Special tools, testers and auxiliary items

- Dial indicator
- Holder VW 387

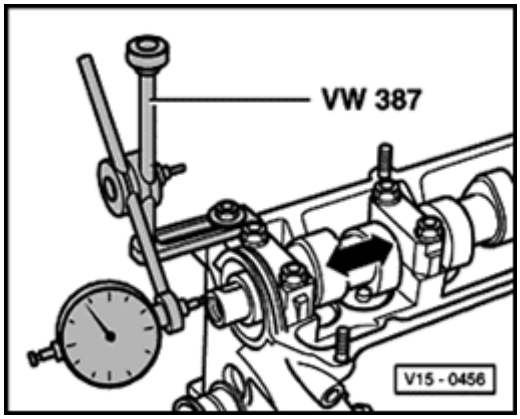

Fig. 1 Checking camshaft axial play

- Measure with valve lifters removed, and first and last bearing caps installed
- Wear limit: max. 0.15 mm (0.0059 in.)

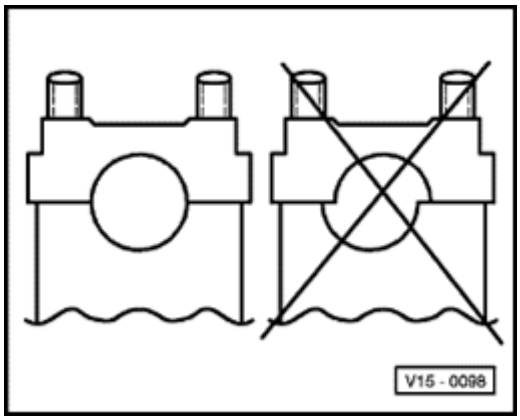

Fig. 2 Camshaft bearing cap installation position

Note that caps have offset bore.

Before installing camshaft, test fit bearing cap and determine proper installation position.

15-14

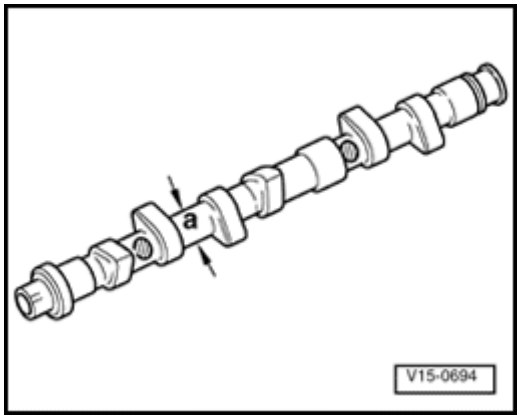

Fig. 3 Camshaft for reconditioned cylinder head with camshaft bearing shells

Reconditioned cylinder heads or replacement engines are sometimes supplied with camshaft bearing shells.

Standard camshaft:

- Dimension -a- = 26.00 mm (1.024 in.)

Undersize camshaft:

- Dimension -a- = 25.75 mm (1.014 in.)
- Marked with yellow paint dot on VW-Audi logo

Note:

Undersize camshafts are not supplied as replacement parts. For replacement, install standard dimension camshaft with appropriate bearing shells.

15-15

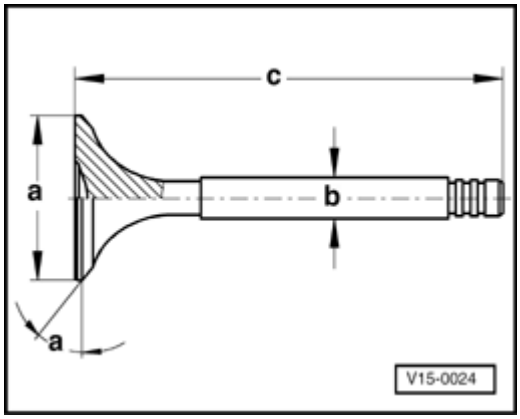

Fig. 4 Valve dimensions

CAUTION!

DO NOT recondition valves by cutting or grinding; only lapping is permitted.

Dimension	Intake valve	Exhaust valve
Head diameter a - mm	39.5 ± 0.15	32.9 ±0.15
Stem diameter b - mm	6.92	6.92
Length c - mm	91.85	91.15
∠ α	45 °	45 °

15-16

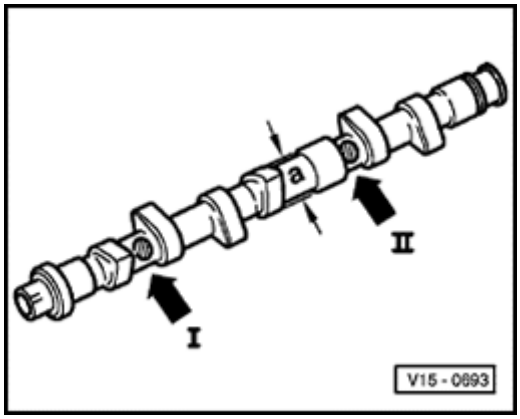

Fig. 5 Camshaft identification and valve timing

Identification

- Cam lobe base circle: -a- = 34 mm
- Identification number and letter markings are stamped between intake and exhaust cam lobes for cylinders 1 and 3.

Markings

Engine code	ABA
Cylinder 1 (arrow I)	D
Cylinder 3 (arrow II)	048

Valve timing at 1 mm valve lift

Engine code	ABA
Intake opens after TDC	6 °
Intake closes after BDC	45 °
Exhaust opens before BDC	42 °
Exhaust closes before TDC	4 °

15-17

Valve seats, refacing

CAUTION!

- ***When refacing valve seats, remove only enough material to produce the correct s contact pattern. The maximum permissib refacing dimension for the cylinder head must be calculated before refacing.***

- ***If the maximum permissible head refacin dimension is exceeded, the hydraulic lifte will not function properly and the cylinde head must be replaced.***

Note:

When repairing engines with leaking valves, it not always sufficient to replace or replace valve seats and valves. It is also necessary to check the valve guides for wear. This particularly important on high-mileage engines.

Calculating max. permissible refacing dimension

- Insert valve and press firmly against seat.

Note:

If the valve is to be replaced as part of a repair use a new valve for the measurement and calculation.

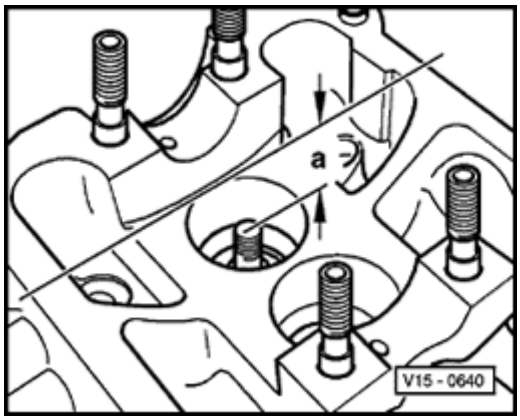

- Measure distance -a- between center of valv stem and top edge of cylinder head.

The measured distance minus the specified minimum dimension is the maximum permissible refacing dimension, the maximum amount of material that can be removed when refacing the valve seats.

Minimum cylinder head dimensions

- For intake valves: 33.8 mm (1.331 in.)
- For exhaust valves: 34.1 mm (1.343 in.)

Example:

Measured distance -a-	34.8 mm
- Specified minimum dimension (exh.)	34.1 mm
= Max. permissible refacing dimension	0.7 mm

Note:

- *If the measured distance -a- is smaller than the specified minimum dimension, measure again using new valves.*
- *If necessary use shorter valves (valve length ⇒ Fig. 4 , ⇒ Page 15-15) or replace the cylinder head.*

15-19

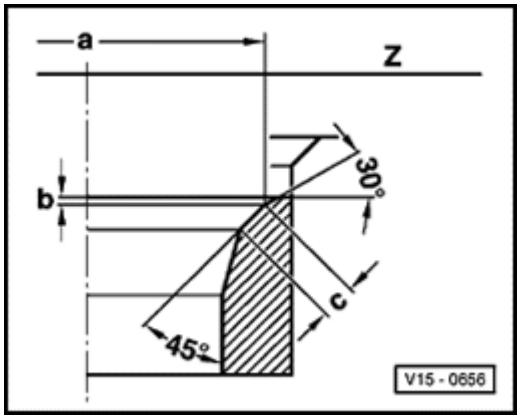

Intake valve seat refacing dimensions

a - 39.2 mm (1.543 in.)

b - maximum permissible refacing dimension

c - approx. 2.0 mm (0.079 in.)

Z - cylinder head lower edge

45° = valve seat angle

30° = valve seat upper correction angle

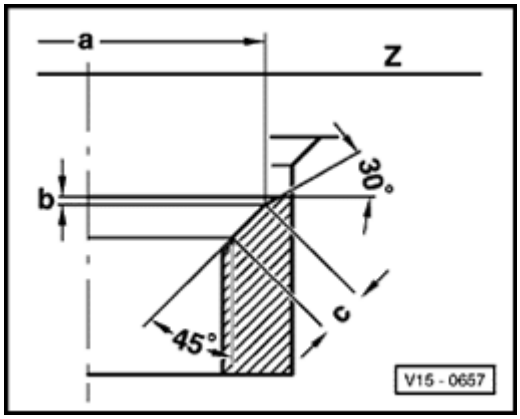

Exhaust valve seat refacing dimensions

a - 32.4 mm (1.276 in.)

b - maximum permissible refacing dimension

c - approx. 2.4 mm (0.094 in.)

45° = valve seat angle

30° = valve seat upper correction angle

CAUTION!

Exhaust valve seat rings are provided with a neck. During reworking, make absolutely sure that the radius of the neck is not damaged.

15-20

Camshaft oil seal, removing and installing

Special tools, testers and auxiliary items

- Holder tool 3036
- Oil seal extractor 2085
- Oil seal installation tool 10-203

Removing

- Remove upper drive belt guard.
- Loosen camshaft sprocket (hold with 3036).

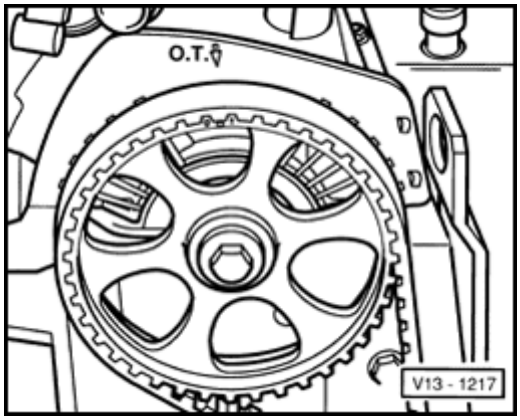

- Rotate camshaft drive belt sprocket to Cyl.1 TDC mark by turning crankshaft.
  - Mark on camshaft sprocket must align with arrow on toothed belt guard.
- Loosen tensioner and remove toothed drive belt.
- Remove camshaft drive belt sprocket.
- Remove Woodruff key from camshaft.
- Install camshaft drive belt sprocket mounting bolt with washer into camshaft and thread in to stop.

15-21

- Turn inner part of seal puller 2085 out two tu (approx. 3 mm) from the outer part and lock knurled screw.

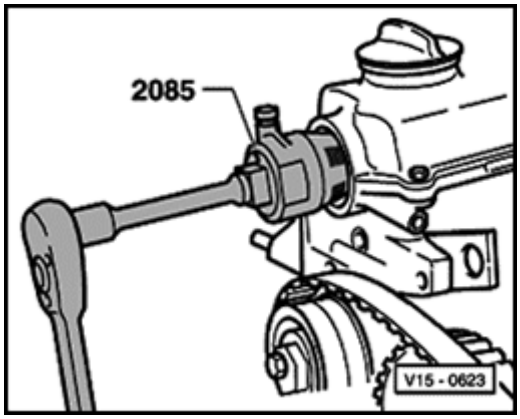

- Lubricate threaded part of seal puller, install and, while applying pressure, screw into sea far as possible.
- Loosen knurled screw and turn inner part against camshaft sprocket mounting bolt unt seal is pulled out.
- Clamp flat surfaces of puller in vise.
- Remove seal from puller with pliers.

Installing

- Oil sealing lip.
- Install seal with sleeve from 10-203 and pres flush with outer surface of cylinder head.
- Install toothed drive belt and adjust tension Page 13-13 .

15-22

Camshaft, removing and installing

Special tools, testers and auxiliary items

- Holder tool 3036
- Torque wrench VAG 1331 (5-50 Nm)
- Torque wrench VAG 1576 (75-400 Nm)

Removing

- Remove upper drive belt guard.
- Loosen camshaft sprocket (hold with 3036).

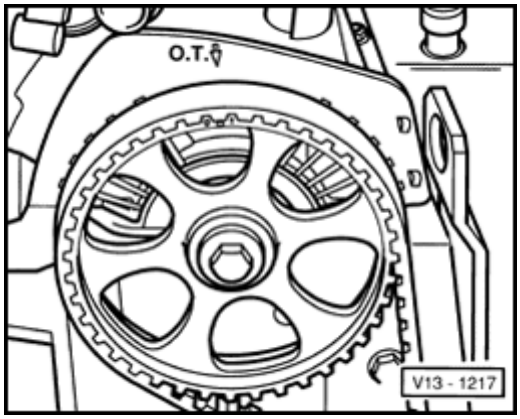

- Rotate camshaft drive belt sprocket to Cyl.1 TDC mark by turning crankshaft.
  - Mark on camshaft sprocket must align with arrow on toothed belt guard.
- Loosen tensioner and remove toothed drive belt.
- Remove upper intake manifold and cylinder head cover.
- Remove camshaft drive belt sprocket.
- Remove Woodruff key from camshaft.

15-23

- Remove camshaft bearing caps 1, 3 and 5.

- Gradually loosen camshaft bearing caps 2 a
4, alternating in diagonal pattern to loosen n
evenly.

- Remove camshaft bearing caps 2 and 4.

- Remove camshaft. If necessary, tap lightly w
a soft-faced mallet to loosen camshaft from
bearing and thrust surfaces.

Installing

Note:

- *When installing the camshaft, the cam lobe*
Cyl.1 must point approximately upward.

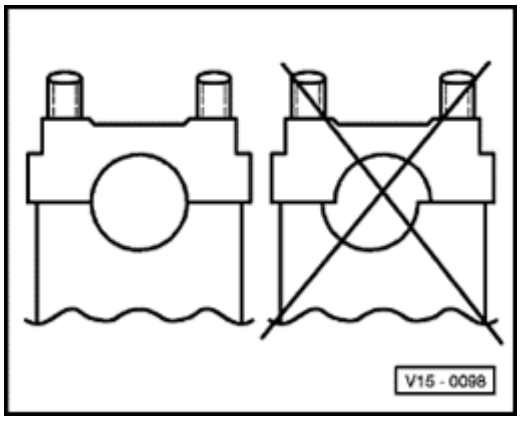

- *When installing the camshaft bearing caps*
the offset bores. Before installation, test-fit
bearing caps to determine correct installatio
positions.

- Oil camshaft bearing and lobe contact surfac
- Install and gradually tighten bearing caps 2 a
4, alternating in diagonal pattern to tighten n
evenly.
  - Tightening torque: 20 Nm (15 ft lb)
- Install bearing caps 1, 3 and 5.
  - Tightening torque: 20 Nm (15 ft lb)

- Insert Woodruff key in camshaft.

- Install camshaft drive belt sprocket.

  - Use holding tool 3036

  - Tightening torque: 80 Nm (59 ft lb)

- Install toothed drive belt and adjust tension ⇒ Page 13-13 .

CAUTION!

After installing new hydraulic valve lifters, DO NOT start the engine for approx. 30 minutes in order to allow the lifters to bleed down. Otherwise there is danger of the valves being damaged by interference with the pistons.

15-25

Hydraulic valve lifters, checking

Special tools, testers and auxiliary items

- Feeler gauges
- Wood or plastic wedge

Note:

- *Replace hydraulic valve lifters only as complete units (they can not be adjusted or repaired).*
- *Some irregular valvetrain noise during start up is normal.*

Checking

- Run engine until radiator coolant fan comes on at least once.
- Increase engine speed to approx. 2500 RPM for 2 minutes.

If the lifters are still noisy, locate defective lifters as follows:

- Remove upper intake manifold and cylinder head cover.
- Turn crankshaft by hand with crankshaft drive belt sprocket bolt in clockwise direction until cam lobe for lifter to be checked faces upward.
- Check play between cam and lifter with a feeler gauge.

If the play exceeds 0.1 mm (0.004 in.):

- Replace valve lifter.

15-26

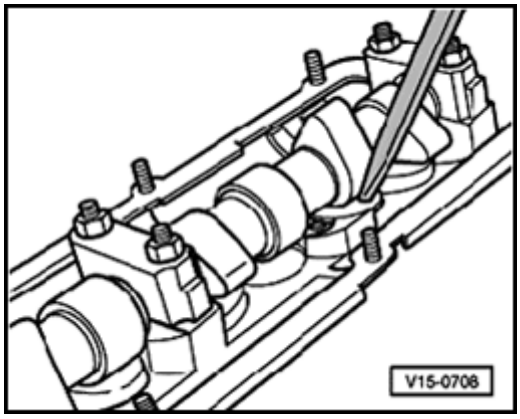

If there is less than 0.1 mm (0.004 in.) play, or no play, check as follows:

- Press down with suitable non-marring tool (e.g. wood or plastic).

If the lifter can be pushed down more than 0.1 mm (0.004 in.) before valve starts to open:

- Replace valve lifter.

CAUTION!

After installing new hydraulic valve lifters, DO NOT start the engine for approx. 30 minutes in order to allow the lifters to bleed down. Otherwise there is danger of the valves being damaged by interference with the pistons.

15-27

Valve guide wear, checking

Special tools, testers and auxiliary items

- Dial indicator
- Holder VW 387
- New intake and exhaust valves (2)

Checking

- Place new valve in guide.
  - Valve stem end must be flush with guide

CAUTION!

Intake guides and exhaust guides have different diameters. Be sure to insert an intake valve in intake valve guides and an exhaust valve in exhaust valve guides.

- Install VW387 and dial indicator on cylinder head, adjacent to guide being checked.

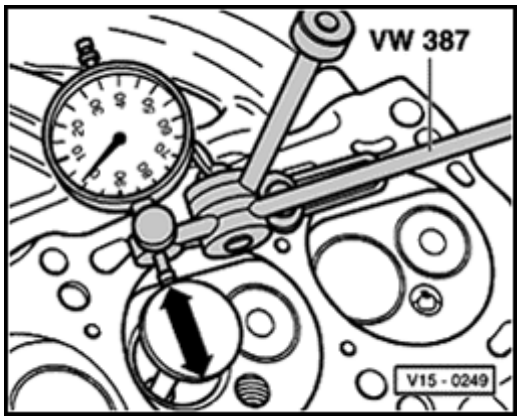

- Rock valve back and forth (arrows) against c indicator and note total travel.

Wear limit

- Intake valve guide: 1.0 mm (0.040 in.)
- Exhaust valve guide: 1.3 mm (0.051 in.)

15-28

Valve guides, removing and replacing

Special tools, testers and auxiliary items

- Drift 3121
- 7 mm reamer 3120 and cutting fluid

Replacing

- Clean and check cylinder head. Cylinder heads with valve seats that can no longer be refaced, or which have already been machined to the minimum dimension, should not have the valve guides replaced.
- Press worn guides out from camshaft side with drift 3121.

  Guides with shoulders (previously replaced) should be pressed out from the combustion chamber side.
- Lubricate new guides with oil.
- Press into cold cylinder head from camshaft side with 3121. Press in up to shoulder.

CAUTION!

After shoulder makes contact DO NOT increase pressure over 1.0 ton. Otherwise the shoulder can break off.

- Ream valve guide to size using reamer 3120 and cutting fluid.
- Reface valve seats ⇒ Page 15-17 .

15-29

Valve stem seals, replacing

- With cylinder head installed

Special tools, testers and auxiliary items

- Slide hammer 3047A
- Adjustable rod 2036
- Pressure hose VW 653/3
- Valve spring compressor VW 541/1A with VW 541/5
- Seal driver 3129

Replacing

- Remove camshaft ⇒ Page 15-22 .
- Remove hydraulic valve lifters (do not interchange). Store with camshaft contact surface down.
- Remove spark plugs.
- Turn crankshaft by hand so piston is at Bottom Dead Center (BDC).

15-30

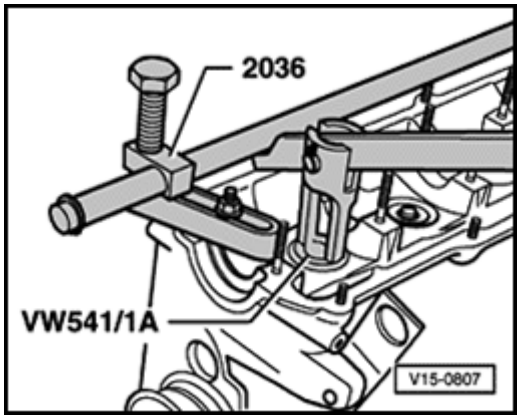

- Install 2036 and adjust bar to cylinder stud height.
- Install pressure hose VW 653/3 in spark plug hole and apply steady pressure.
  - At least 6 bar (87 psi)
- Compress valve springs with VW 541/1A and VW 541/5, and remove.

Note:

Tight valve keepers can be loosened with light taps on the tool lever.

- Remove valve stem seals with 3047A slide hammer.

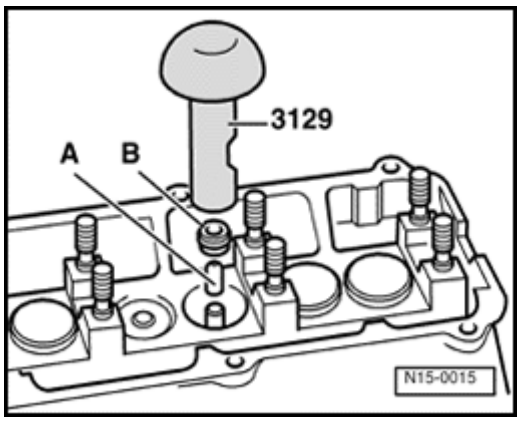

- Slide plastic seal protector -A- onto valve stem to prevent damage to new seals.
- Lubricate seal -B-.
- Carefully push seal over valve stem and onto valve guide using 3129 seal driver.

17-1

Lubrication system, general information

CAUTION!

- If large amounts of metal shavings or small metal particles are found in the engine oil, caused by wear of crankshaft and connecting rod bearings, thoroughly clean the oil passages to remove contaminants and help prevent later damage.
- The oil cooler cannot be sufficiently cleaned, and must be replaced.
- The oil level must NOT exceed the MAX mark on the dipstick. If this level is exceeded (too much oil) the catalytic converter may be damaged.

- Checking oil pressure ⇒ Page 17-7

Oil system capacity[1]:

- Without oil filter 3.5 liters (3.7 qt.)
- With oil filter 4.0 liters (4.2 qt.)

[1] Also see Owners Manual

Engine oil specifications:

- The following terms must appear on the oil container singly or in combination with other designations:
- VW 502 00 or VW500 00 or VW501 01
- ACEA A2 or ACEA A3
- API-SJ or API-SL
- Engine oils are graded according to their viscosity. The proper grade to be used in your engine depends on existing climatic or seasonal conditions.
- The engine oil which was first put into your engine has a viscosity grade of SAE 5W-40. You can use this oil over all temperature ranges for normal driving. If engine oil viscosity grade SAE 5W-40 is not available, you can also use SAE 5W-30.

17-2

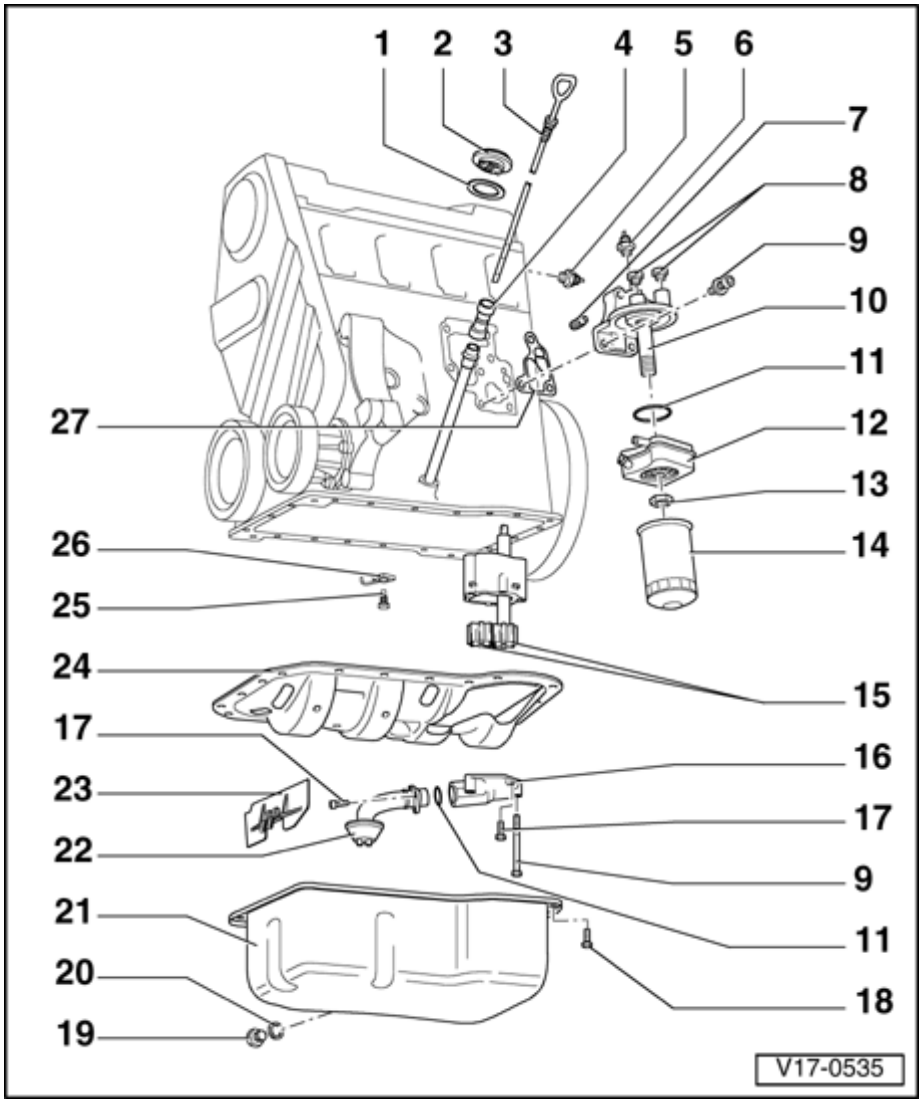

Lubrication system, components

1 - Gasket

- ♦ Replace if damaged

2 - Cap

3 - Oil dipstick

- The oil level must not be above the max. mark!
- ♦ Oil above shaded zone: DO NOT top up with engine oil!
- ♦ Oil level in shaded zone: engine oil can be topped up
- ♦ Oil level between min. and shaded zone: top up engine oil

4 - Dipstick tube

- Pull out when draining oil

5 - 0.3 bar oil pressure switch - F22-

- 25 Nm (18 ft lb)
- Wire color: Blue/black
- Checking ⇒ Page 17-7
- If leaking, cut seal and replace.

Engines up to 04.95

- 0.3 bar (4.4 psi)
- Color: brown

Engines from 04.95

- 0.25 bar (3.6 psi)
- Color: blue

17-3

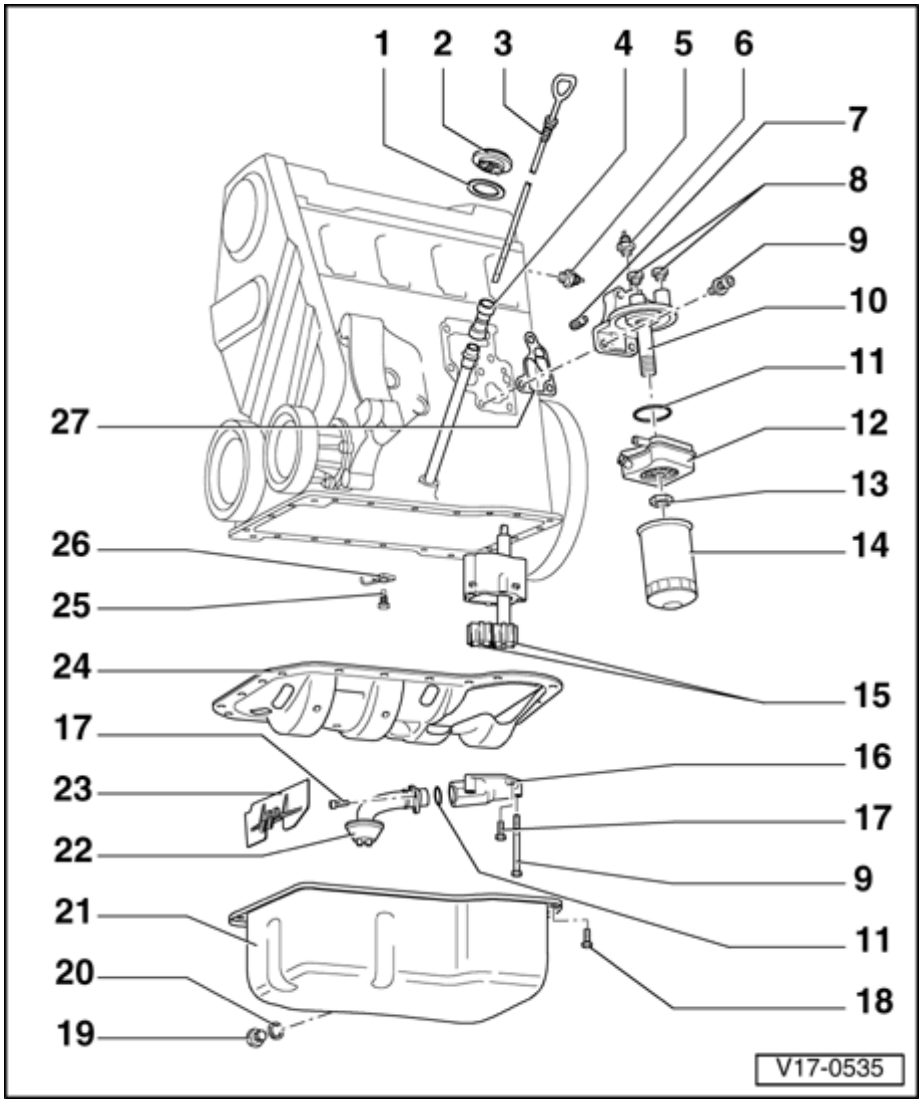

6 - Oil pressure switch - F1-

- 1.8 bar (26 psi)
- 25 Nm (18 ft lb)
- Color: White
- Wire color: Yellow
- Checking ⇒ Page 17-7
- If leaking, cut seal and replace.

7 - Check valve

- 5 Nm (44 in lb)

8 - Plug

9 - 20 Nm (15 ft lb)

10 - Oil filter bracket

11 - O-ring

- Always replace

12 - Oil cooler

- Flange side: coat

contact surfaces with AMV 188 100 02 (outside seal)

- Ensure clearance to surrounding components
  - See Caution! ⇒ Page 17-1

13 - 25 Nm (18 ft lb)

17-4

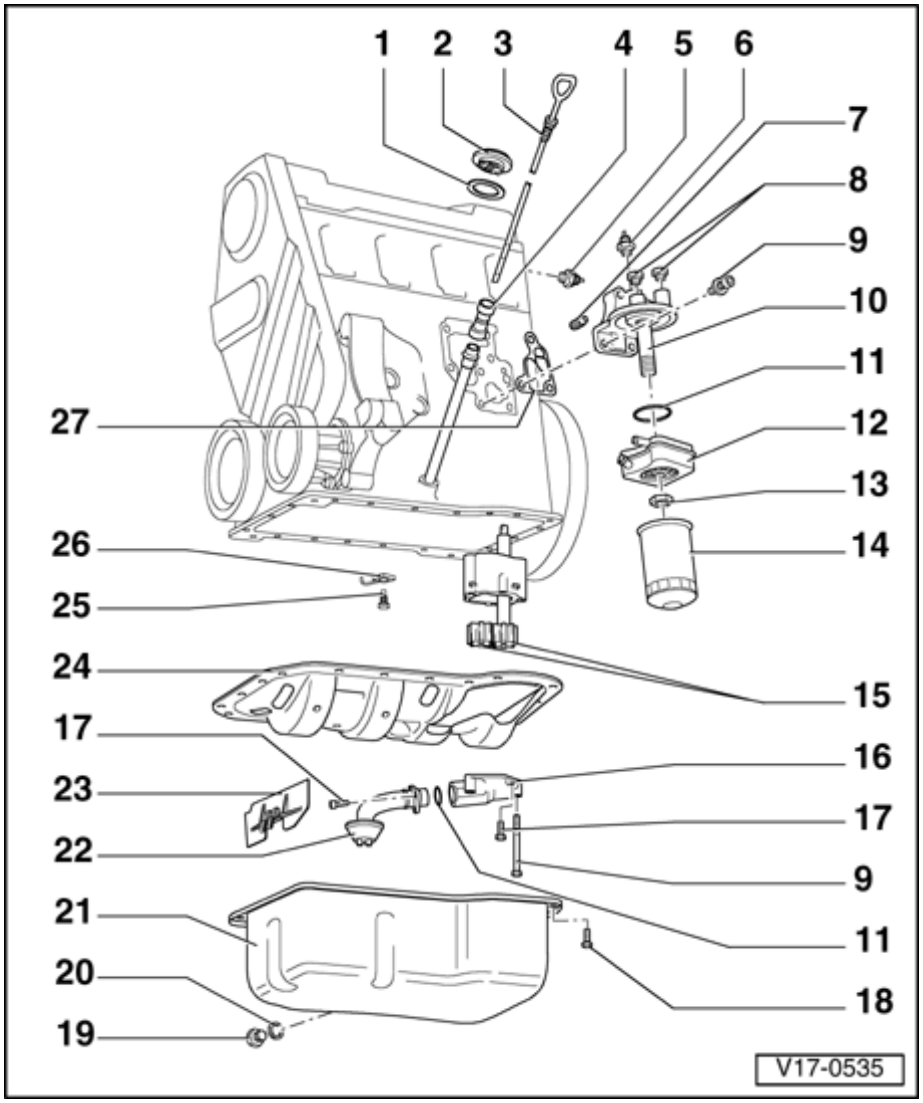

14 - Oil filter

- Loosen with filter wrench
- Tighten by hand
- Note installation instructions on oil filter

15 - Oil pump gears

- Gear backlash, checking ⇒ Fig. 1
- Checking axial clearance ⇒ Fig. 2

16 - Oil pump cover with pressure relief valve

- Opening pressure: 5.7-6.7 bar (83-97 psi)

17 - 10 Nm (7 ft lb)

18 - 20 Nm (15 ft lb)

- Loosen or tighten bolts on flywheel side with tool 3185

19 - Oil drain plug

- 30 Nm (22 ft lb)

- Replace if leaking. See Parts Catalog for correct application. In some cases, seal and drain plug are combined; do not interchange with separate seal and drain plug.

20 - Seal

- Always replace

17-5

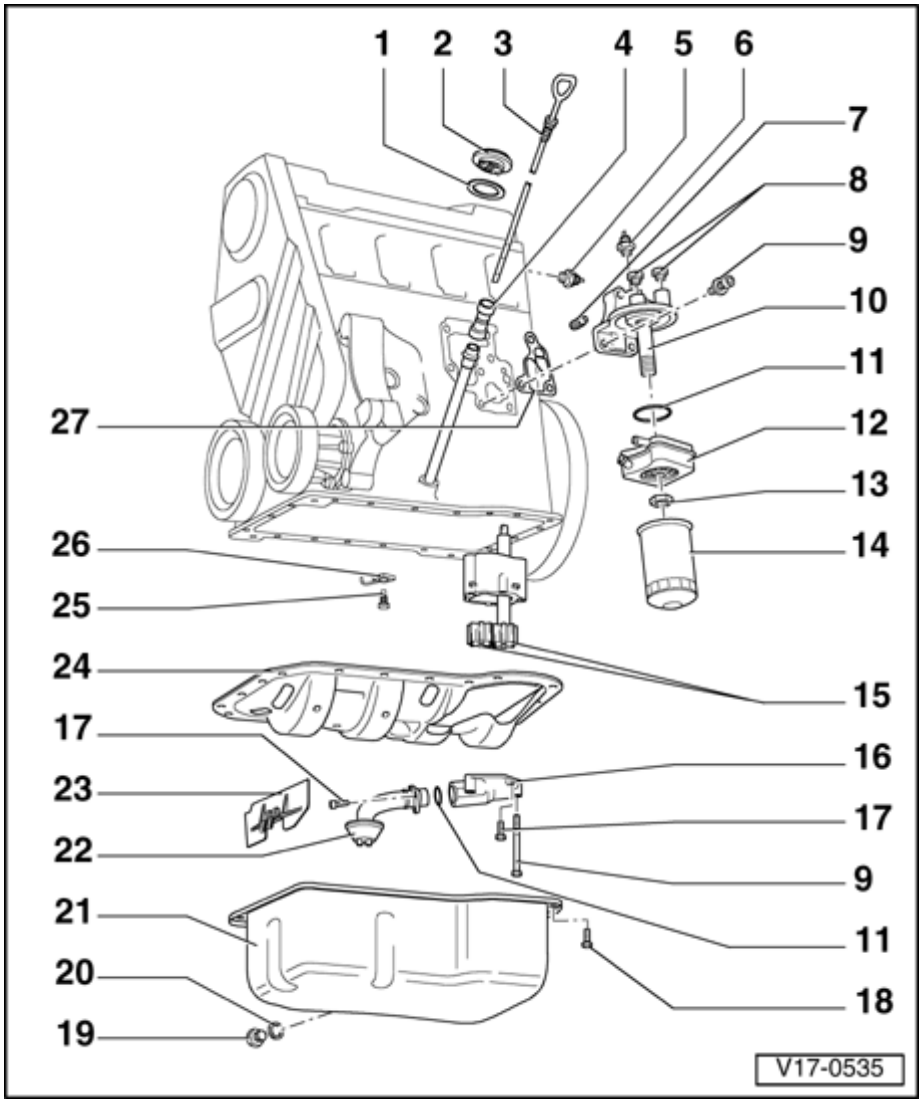

21 - Oil pan

- Clean mating surface before assembly

22 - Suction line

- Clean screen if dirty

23 - Baffle plate

- To remove, remove oil pump cover or suction line

24 - Gasket

- Always replace

- Baffle (shown) not introduced

25 - Pressure relieve valve

- 27 Nm (20 ft lb)

- Opening pressure: 2.5-3.2 bar (36-47 psi)

- Not applicable

from 04.95

26 - Oil spray nozzle

- For piston cooling
- Not applicable from 04.95

27 - Gasket

- Always replace

17-6

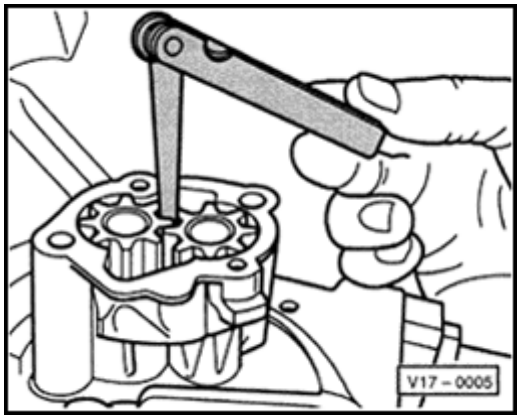

Fig. 1 Checking oil pump backlash

New: 0.05 mm (0.002 in.)

Wear limit: 0.20 mm (0.008 in.)

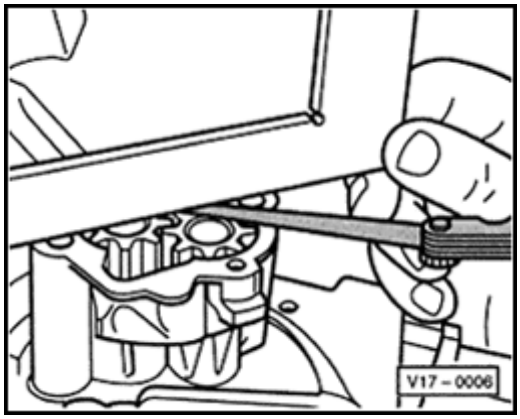

Fig. 2 Checking oil pump axial clearance

Wear limit: 0.15 mm (0.006 in.)

17-7

Oil pressure and oil pressure switches, checking

For functional testing and repair of the optical (warning light) and acoustic (warning buzzer) oil pressure warning systems:

⇒ *Electrical Wiring Diagrams, Troubleshooting & Component Locations*

Special tools, testers and auxiliary items

- VAG 1342 oil pressure tester
- VAG 1527B voltage tester
- VW 1594 connector test kit

Checking

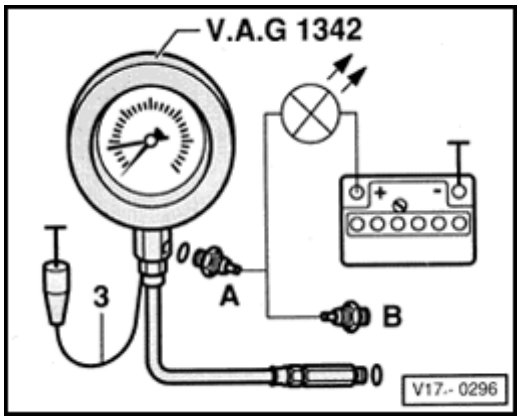

- Remove 0.3 bar oil pressure switch -F22- (brown insulation) and install in VAG 1342 tester.

Note:

Engines from 04.95: -F22- is a 0.25 bar oil pressure switch with blue insulation.

- Connect tester to cylinder head or oil filter bracket in place of 0.3 bar oil pressure switch.
- Connect brown wire -3- from tester to ground.

17-8

- Connect VAG 1527B voltage tester between battery positive (B+) and 0.3 bar oil pressure switch -A-, using adapter cables from VW 15 connector test kit.

  - LED must light up

- Start engine and increase RPM slowly.

  - The LED must go out:

  Engines up to 04.95: 0.15-0.45 bar (2.1-6.5 psi)

  Engines from 04.95: 0.15-0.35 bar (2.1-5.1 psi)

If NO:

- Replace 0.3 bar oil pressure switch.

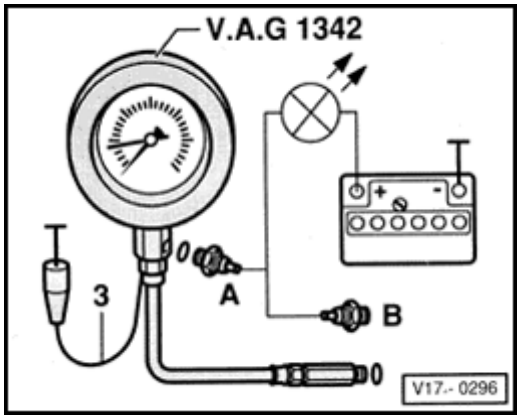

- Connect voltage tester to 1.8 bar oil pressure switch -F1- (white insulation) -B-.

  - At 1.6-2.0 bar (23-29 psi) LED must light up

If NO:

- Replace 1.8 bar oil pressure switch -F1-. Increase engine speed further.

  - At 2000 RPM and oil temperature at least 8 °C (176 °F), oil pressure should be at leas bar (29 psi).

  - At higher engine RPM, oil pressure must no exceed 7.0 bar (101 psi).

- If necessary, Replace oil pump cover with pressure relief valve.

Cooling system

General information

WARNING!

When the engine is hot, the cooling system is under pressure. If it is necessary to open the cooling system, do so slowly to relieve pressure gradually before starting repairs.

Note:

- *Hose connections are secured with spring-type or screw-type clamps.*
- *Use clamp pliers, Hazet 798-5 or equivalent, to remove and install spring-type clamps.*
- *During repairs, spring-type clamps may be replaced with screw-type clamps.*

Draining and filling procedures and water/anti-freeze coolant mixture ratios ⇒ Page 19-9

For leak tests of cooling system use VAG 1274 and 1274/3.

19-2

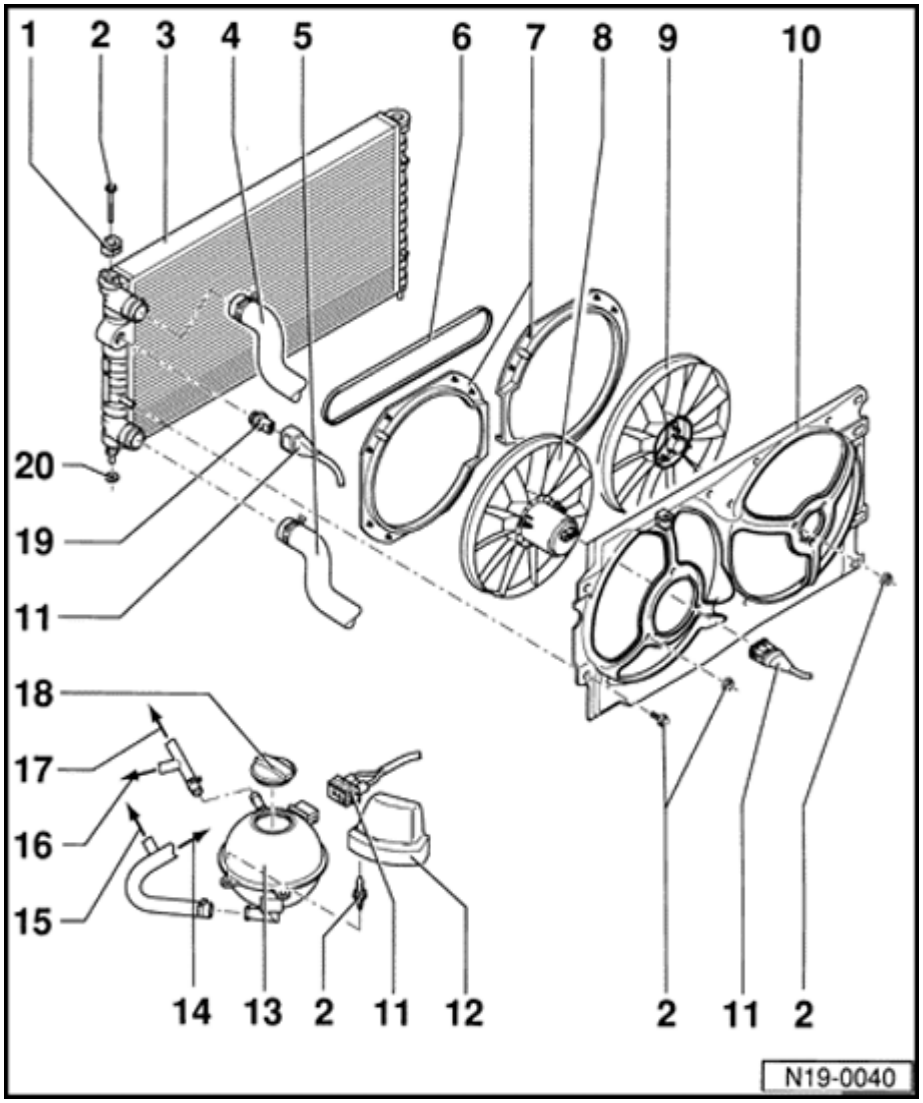

Cooling system components, body side

1 - Mounting

2 - 10 Nm (7 ft lb)

3 - Radiator

- Removing and installing ⇒ Page 19-12
- After replacing, always replace coolant

4 - Coolant hose, upper

- To connector pipe ⇒ Page 19-5 , item 1

5 - Coolant hose, lower

- To coolant pump ⇒ Page 19-6 , item 17

6 - V-belt

- For auxiliary fan - 9 -

- Only with optional equipment

7 - Guide ring

- Note installation position
- Attached to fan shroud - 10 - with clips

19-3

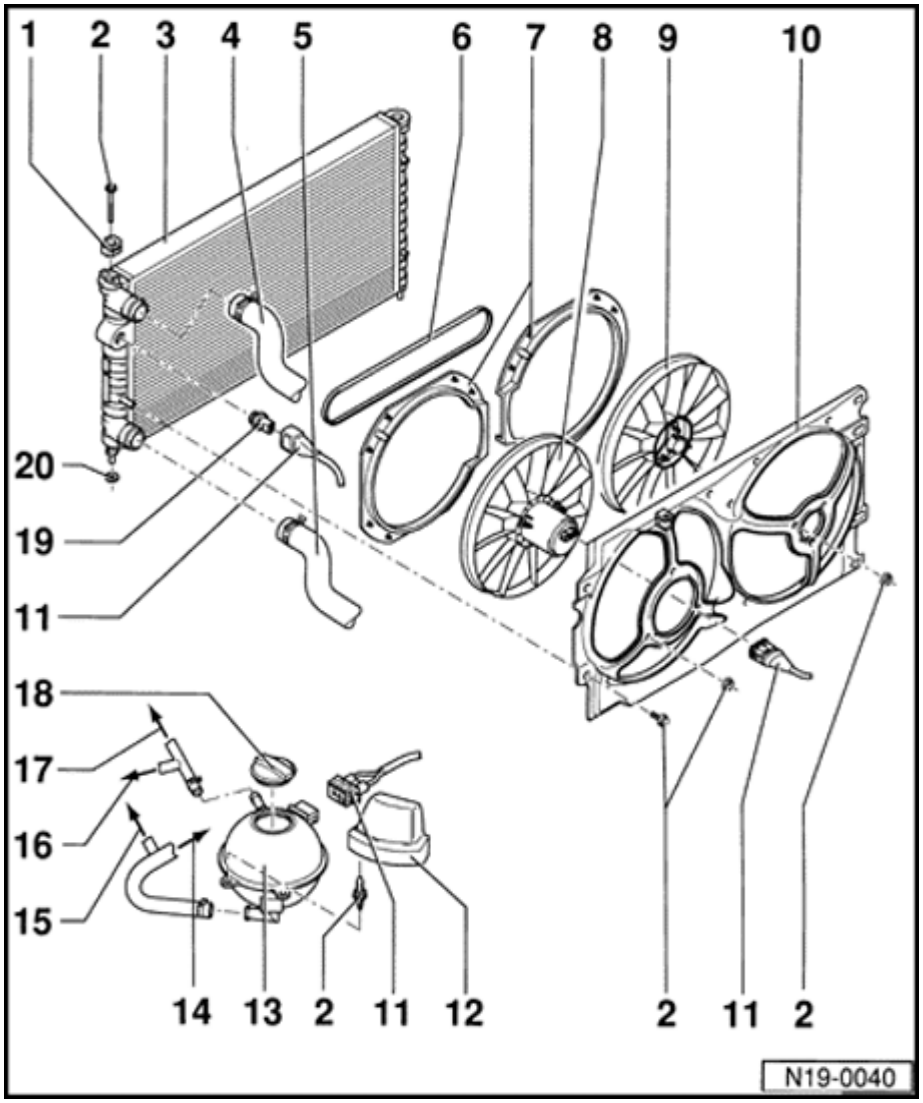

8 - Coolant fan -V7-

- Removing and installing ⇒ Page 19-12

9 - Auxiliary fan

- Only with optional equipment
- Removing and installing ⇒ Page 19-12

10 - Fan shroud

- Note installation position

11 - Connector

12 - Cover

13 - Expansion tank

14 - To coolant pipe or connector flange

- ⇒ Page 19-6 , item 14

15 - To ATF cooler

- For vehicles with automatic

transmission

19-4

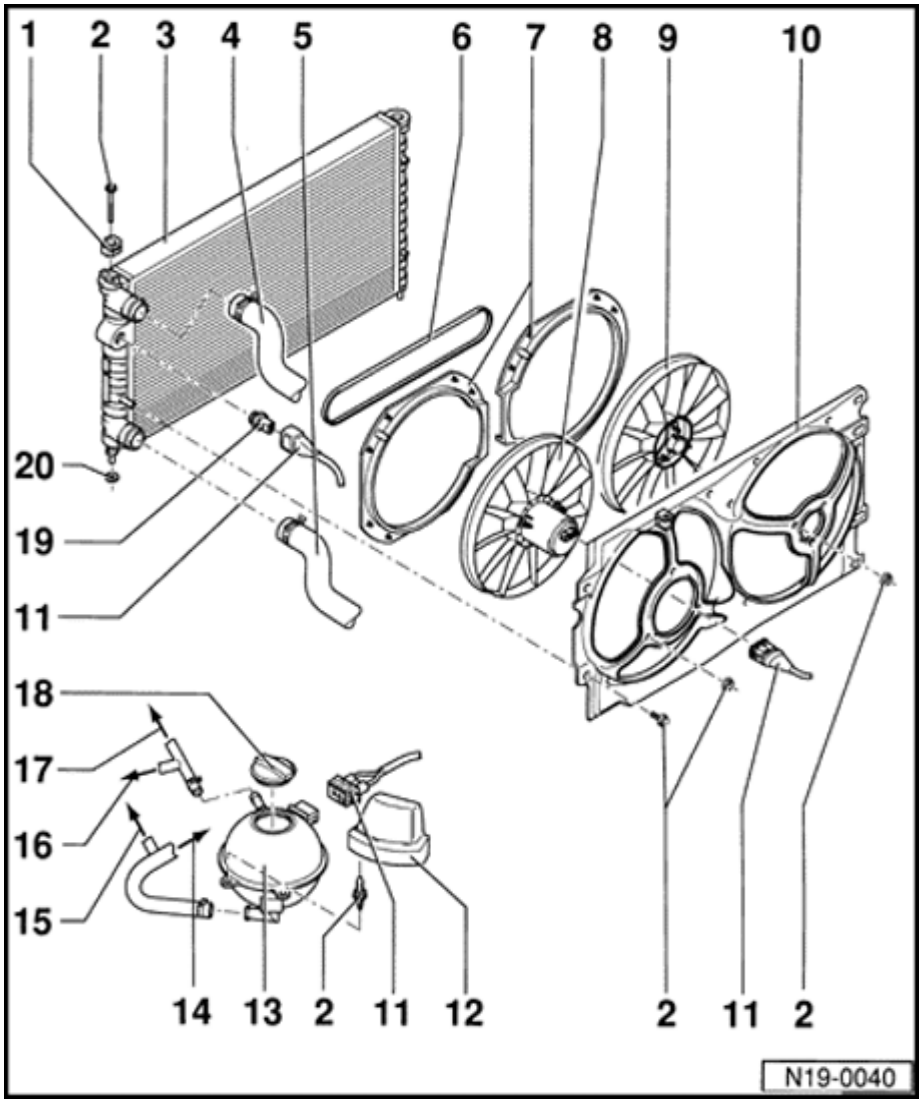

16 - To cylinder head

- ⇒ Page 19-5 , item 8

17 - To upper coolant hose

- ⇒ Page 19-5 , item 2

18 - Cap

- Check with VAG 1274 and 1274/4
- Test pressure: 1.3-1.5 bar (19-22 psi)

19 - Coolant Fan Control (FC) thermal switch - F18-

- Tightening torque: 35 Nm (26 ft lb)
- For electric coolant fan - 8 -

Switching temperatures: 1st stage:

- ON: 92 ° - 97 ° C (198 ° - 207 ° F)
- OFF: 84 ° -91 ° C (183 ° - 196 ° F)

Switching temperatures: 2nd stage:

- ON: 99 ° - 105 ° C (210- 221 ° F)
- OFF: 91 ° -98 ° C (196 ° - 208 ° F)

20 - Rubber bushing

19-5

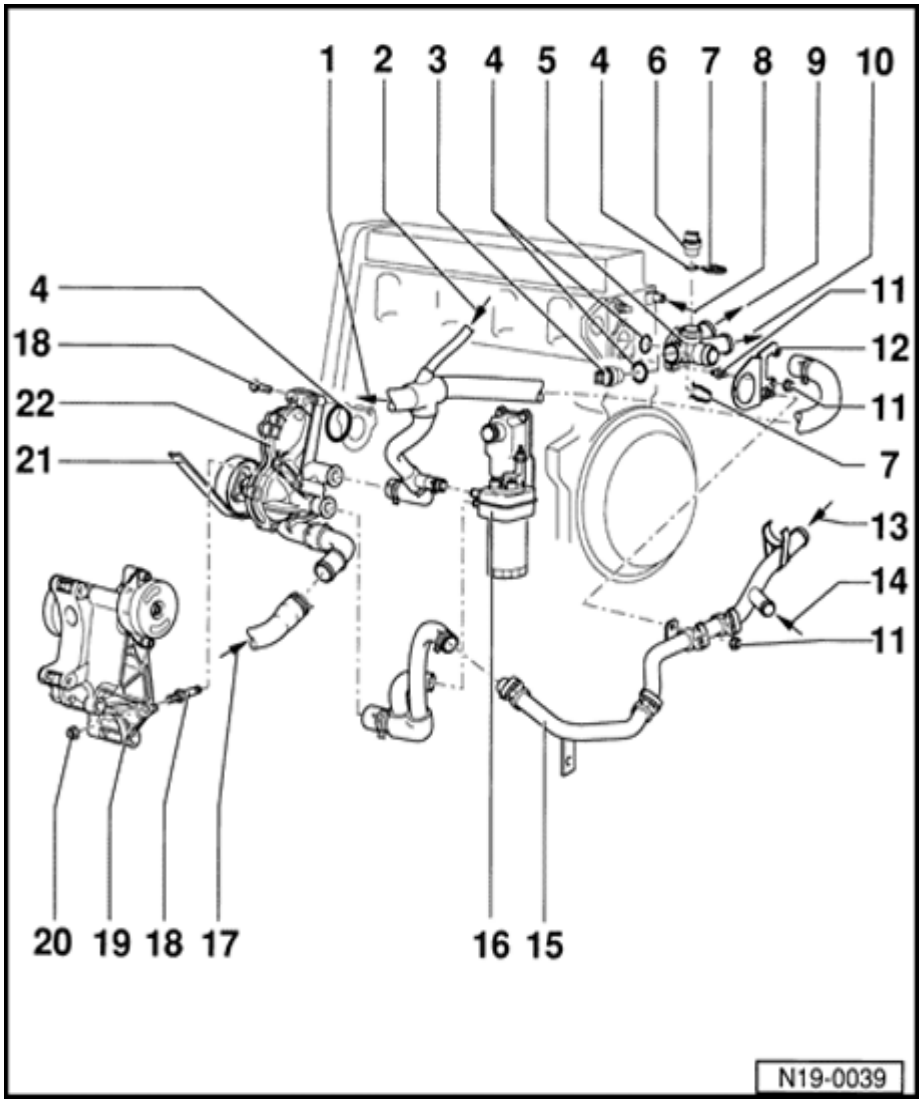

Cooling system components, engine side

1 - To top of radiator

- ⇒ Page 19-2 , item 4

2 - To expansion tank

- ⇒ Page 19-5 , item 17

3 - Engine Coolant Temperature (ECT) sensor - G62-

- With ECT sensor G2 for gauge

4 - O-ring

- Always replace

5 - Connector flange

6 - A/C cut-out thermal switch

7 - Retaining clip

8 - From

expansion tank

- ⇒ Page 19-4 , item 16

9 - To heater core

10 - To ATF cooler

- Vehicles with auto. trans.

11 - 10 Nm (7 ft lb)

12 - Bracket

19-6

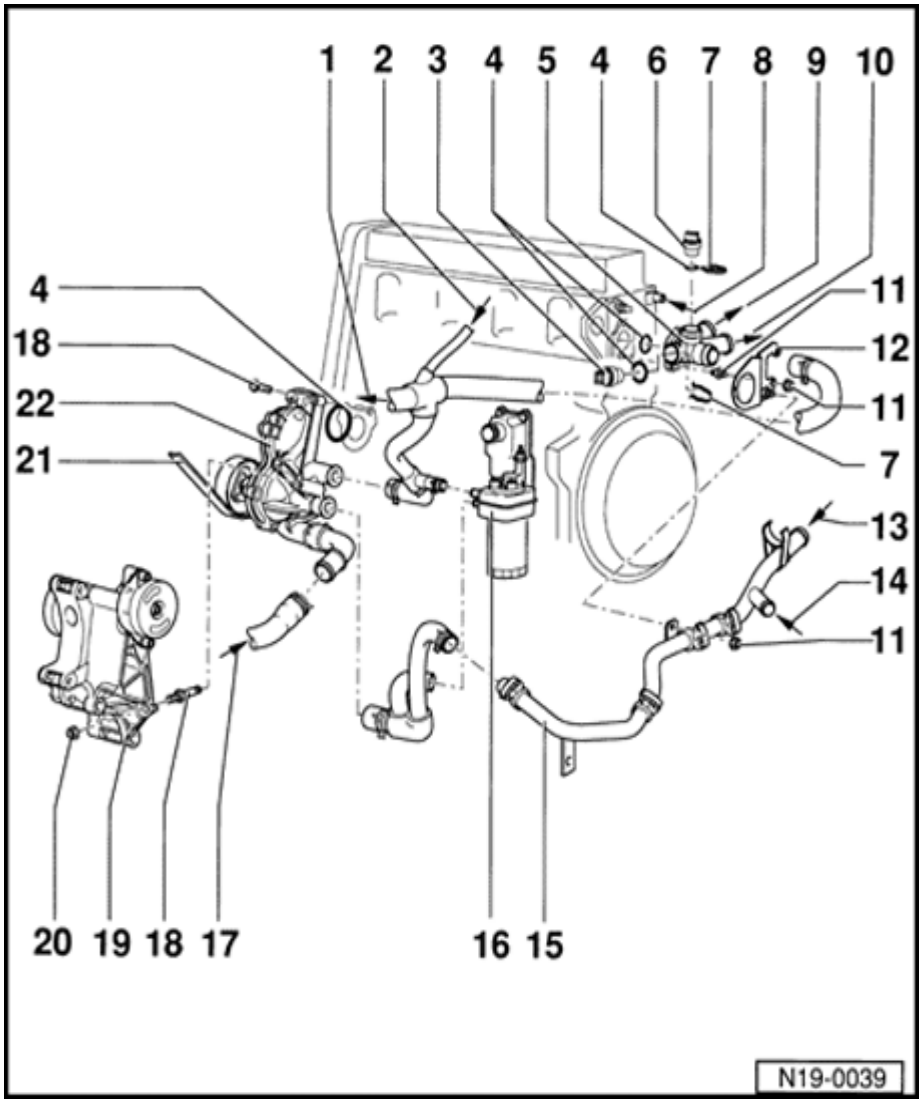

13 - From heater core

14 - From expansion tank or ATF cooler

- ⇒ Page 19-3 , item 14

15 - Coolant line

16 - Oil cooler

- Removing and installing ⇒ Page 17-3 , item 12

17 - To bottom of radiator

- ⇒ Page 19-2 , item 5

18 - 20 Nm (15 ft lb) plus $^1/_4$ -turn (90 °)

- Always replace

19 - Generator (GEN) bracket

20 - 30 Nm (22 ft lb)

21 - V-belt/Ribbed drive belt

- Ribbed drive belt, removing and installing ⇒ Page 13-11
- V-belt tension, adjusting:

⇒ *Repair Manual, Suspension, Wheels, Brakes, Steering, Repair Group 48*

22 - Coolant pump

- Disassembling and assembling ⇒ Page 19-7

19-7

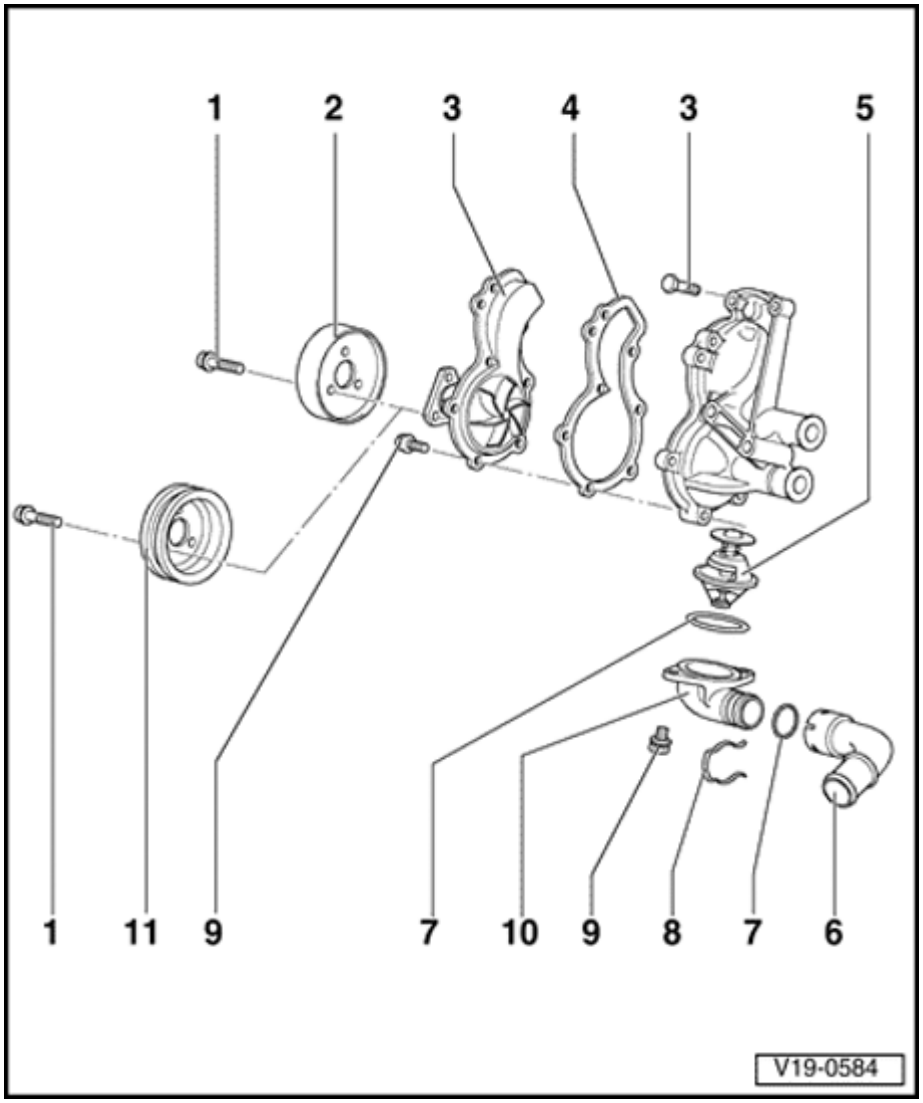

Coolant pump, disassembling and assembling

1 - 25 Nm (15 ft lb)

2 - Coolant pump pulley

- For ribbed drive belt

3 - Coolant pump

- Make sure that shaft rotates smoothly

4 - Gasket

- Always replace

5 - Coolant thermostat

- To check, heat in water
- Starts to open approx. 87 ° C (189 ° F)
- Fully open at approx. 102 ° C (216 ° F)

- Opening stroke: 7 mm (0.28 in.) minimum

6 - Connector pipe

19-8

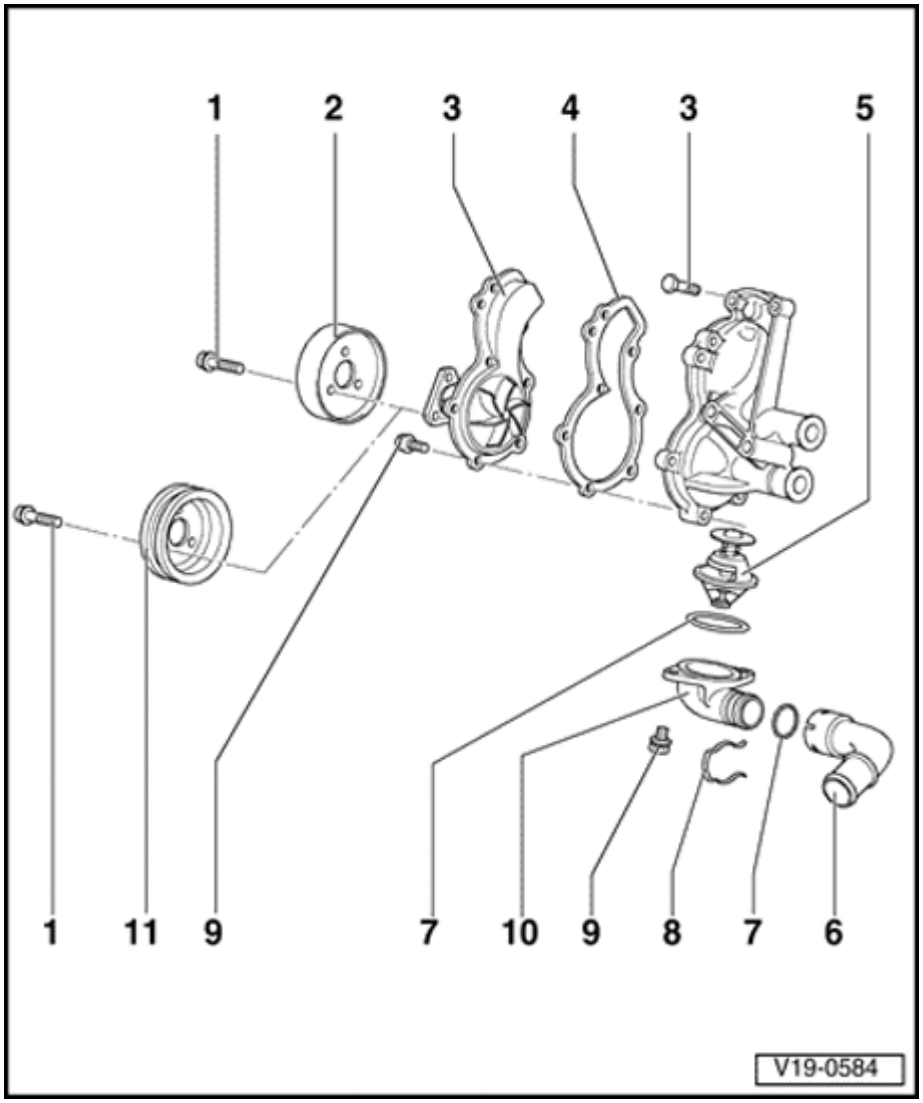

7 - O-ring

- Always replace

8 - Clip

9 - 10 Nm (7 ft lb)

10 - Flange

11 - Coolant pump pulley

- For V-belt
- Remove and install with VAG 1590

19-9

Cooling system, draining and filling

Draining

- Open coolant expansion tank cap.

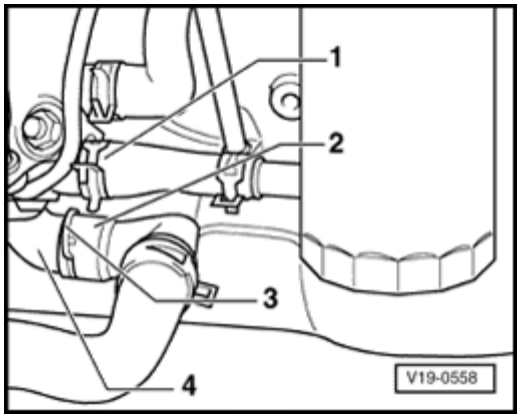

- Remove clip -3- and separate connector pipe -2- from thermostat flange -4-.
- Remove coolant hose -1- or thermostat flange -4-.

CAUTION!

DO NOT re-use coolant that has been drained from the system. Dispose of properly.

Filling

Note:

- *The cooling system of all Volkswagen vehicles is filled at the factory with a mixture of water and anti-freeze solution (G11) containing corrosion inhibitors designed for year round use.*
- *Phosphate-free antifreeze prevents frost and corrosion damage, and prevents chalk formation in addition to raising the boiling point of the mixture. The higher boiling point improves the operational efficiency under full load, particularly in tropical climates.*
- *Use phosphate-free coolant-antifreeze Part No. ZVW 237 102 whenever replacing or topping up coolant. This applies to ALL Volkswagen vehicles and ALL model years.*

19-10

Recommended mixture ratios:

Protection to	Anti-freeze percentage[1)]	G11[2)]	Water[2)]
Vehicles with automatic transmission			
-25 ° C (-13 ° F)	40%	2.5 liters (2.6 qt.)	3.7 liters (3.9 qt.)
-35 ° C (-31 ° F)	50%	3.1 liters (3.3 qt.)	3.1 liters (3.3 qt.)
Vehicles with manual transmission			
-25 ° C (-13 ° F)	40%	2.2 liters (2.3 qt.)	3.4 liters (3.6 qt.)
-35 ° C (-31 ° F)	50%	2.8 liters (3.0 qt.)	2.8 liters (3.0 qt.)

1) Percentage of anti-freeze must not exceed 60%, freezing protection and cooling efficiency decrease at higher anti-freeze percentages.

2) Total coolant quantity may vary depending on vehicle equipment.

19-11

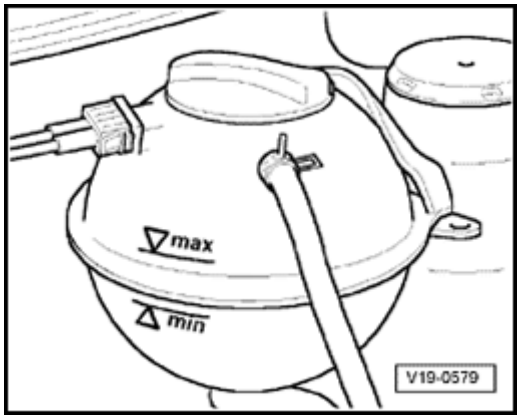

- Slowly fill coolant up to "MAX" mark on expansion tank.

  Filling time: approx. 5 minutes
- Close expansion tank (install cap).
- Let engine run until coolant fan comes on.
- Check coolant level and top off if necessary.
  - With engine at operating temperature, coolant level must be at "MAX" mark.
  - With cold engine, coolant level must be between "MIN" and "MAX" marks.

19-12

Radiator and coolant fan, removing and installing

Special tools, testers and auxiliary items

- Pliers VAG 1921 for spring-type clips

Removing

- Drain coolant ⇒ Page 19-9 .
- Disconnect coolant hoses from radiator.
- Disconnect harness connectors from coolant fan thermal switch F18 and coolant fan.
- Remove both radiator mounting bolts.
- Remove lock carrier (radiator support) with attachments.

⇒ *Repair Manual, Body Exterior, Interior, Repair Group 50*

- Lift out radiator, coolant fan and air guide housing.

Vehicles with air conditioner

Refer to additional information and instructions for removal and installation ⇒ Page 19-14 .

Installing

Install in the reverse order of removal, noting the following:

- Cooling system, filling ⇒ Page 19-9

- Electrical connections and routing:

⇒ *Repair Manual, Electrical Equipment, Repair Group 97*

- Headlight adjustment:

⇒ *Repair Manual, Electrical Equipment, Repair Group 94*

19-14

Additional information for vehicles with A/C

WARNING!

The A/C refrigerant is toxic. The A/C circuit must only be opened by specially trained technicians using the proper tools and equipment.

CAUTION!

- ***Disconnect brackets and support points only.***
- ***DO NOT open the air conditioning refrigerant circuit.***
- ***Refrigerant lines kink easily. DO NOT stretch or bend them***

- Remove air cleaner (ACL) housing with intake air ducts.
- Remove retaining clamps from A/C receiver/dryer and allow to hang free.
- Remove retaining clamp(s) from A/C refrigerant lines.
- Separate condenser from radiator and pull it forward as possible.
- Remove radiator and coolant fan.
- Secure condenser to body so that refrigerant lines and hoses are out of the way but not stressed.

Fuel supply system

General information

Observe safety rules ⇒ Page 20-7

Observe rules for cleanliness ⇒ Page 20-9

Accelerator pedal cable ⇒ Page 20-10

Note:

- *Hose connections are secured with either screw, clamp, or spring-type hose clips.*
- *Always replace clamp-type with screw or spring-type clips.*
- *Fuel hoses in engine compartment must only be secured with spring-type clips. The use of clamp or screw-type clips is not permissible.*
- *Hose connections are secured with spring-type clips. For fitting the spring-type clips commercial pliers e.g. Hazet 798-5 are recommended.*

20-2

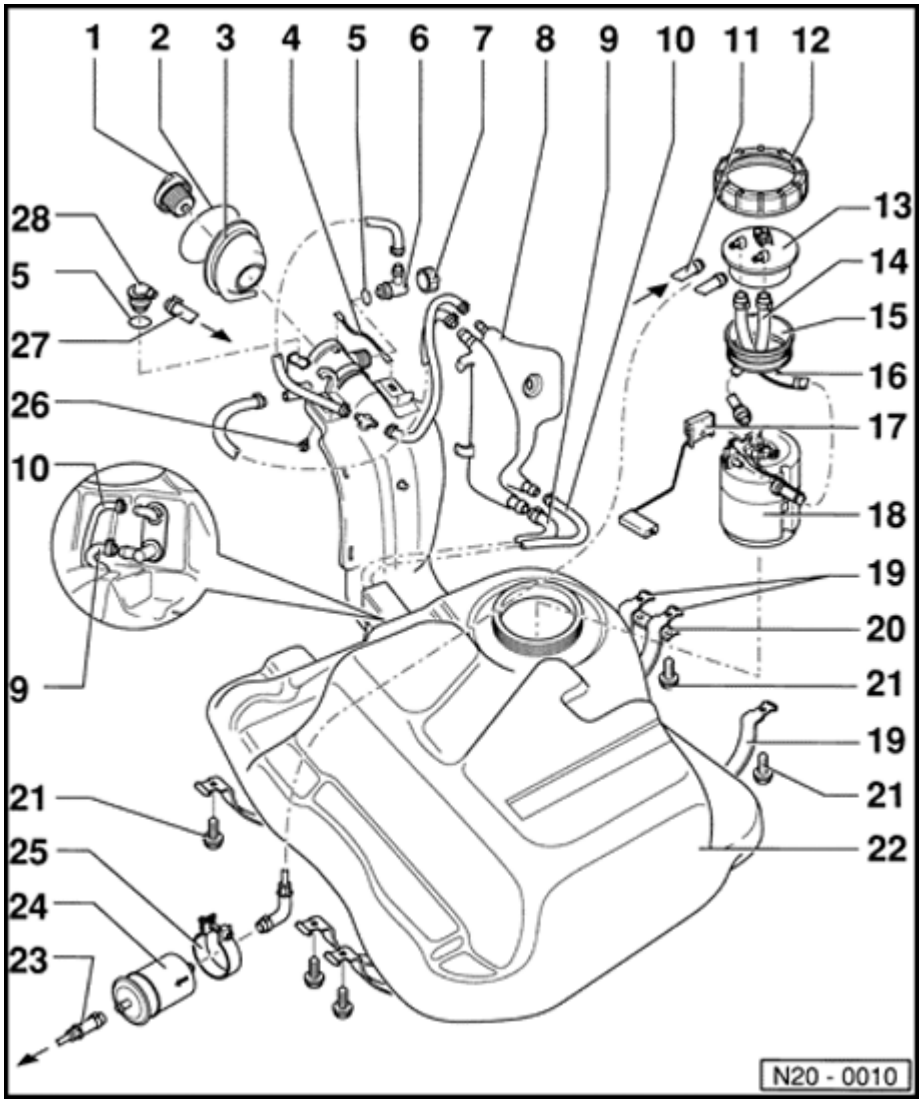

Fuel filter and fuel tank with attaching parts, removing and installing

CAUTION!

After repairs to fuel pump or fuel level sensor are complete, be sure fuel supply or return hoses do not make contact with the fuel tank (pump noises may be transferred).

1 - Cap

- Replace seal if damaged

2 - Circlip

3 - Rubber cup

4 - Ground (GND) connection

5 - O-ring

- Always replace

6 - Vent valve

- Checking ⇒ Page 20-6 , ⇒ Fig. 2

7 - Union nut

20-3

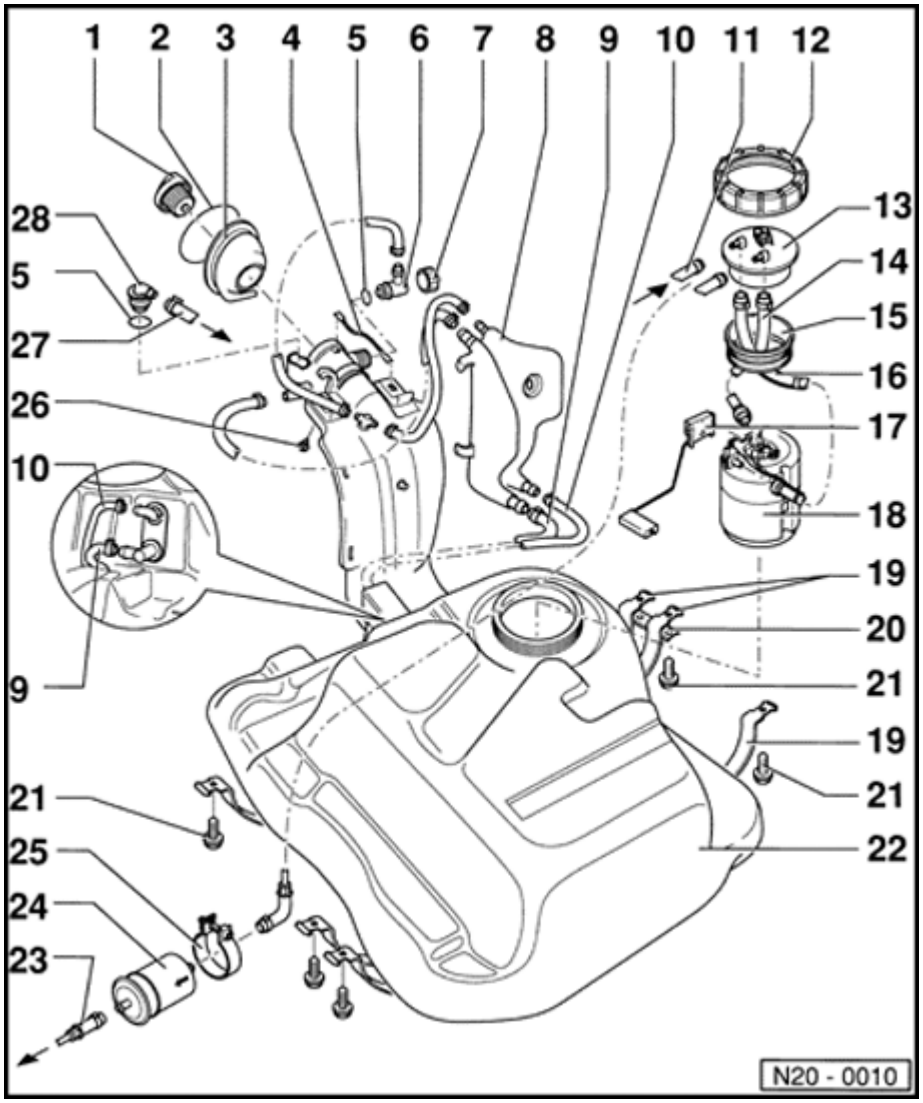

8 - Reservoir

- Type shown: Wagon
- Basic expansion tank in Sedan

9 - Vent hose

- Filler vent

10 - Vent hose

- Fuel tank vent, for Wagon only

11 - Return hose

- Color: Blue
- From fuel rail

⇒ *Repair Manual, 2.0 Liter 4-Cyl. 2V Fuel Injection & Ignition, Engine Code(s): ABA m.y. 1995, Repair Group 24*

⇒ *Repair Manual, 2.0 Liter 4-Cyl. 2V Fuel Injection & Ignition, Engine Code(s): ABA m.y. 1996-1997, Repair Group 24*

12 - Ring nut

- Remove and install with 3217

13 - Flange

- Note installed position on fuel tank ⇒ Page 20-6 , ⇒ Fig. 1

14 - Supply hose

15 - Sealing ring

- Lubricate with gasoline to assemble
- Replace if damaged

20-4

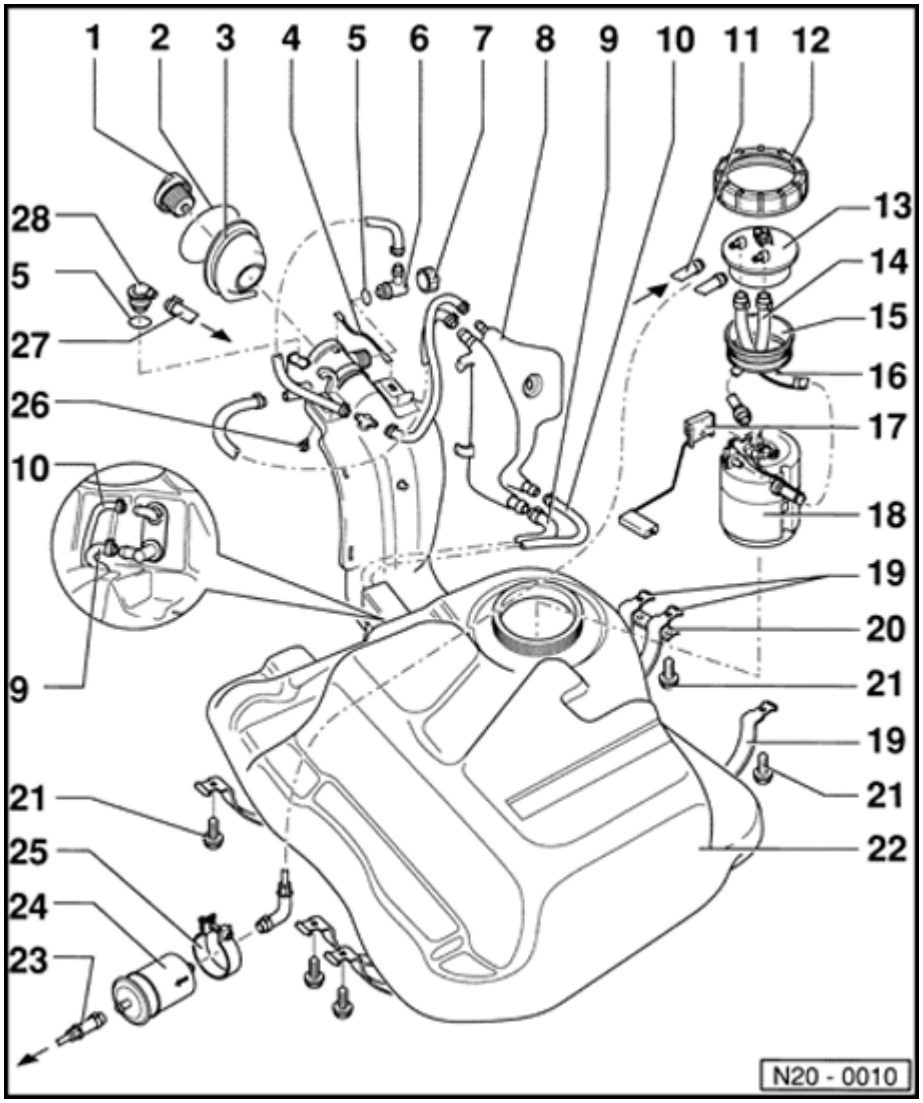

16 - Return hose

17 - Fuel level sensor -G-

18 - Fuel Pump (FP) -G6-

- Removing and installing ⇒ Page 20-12
- Checking ⇒ Page 20-14

19 - Mounting strap

- Note different lengths

20 - Bracket

- For mounting straps

21 - 25 Nm (18 ft lb)

22 - Fuel tank

- When removing support with VAG 1383 A

23 - Supply hose

- Color: Black
- To fuel rail

⇒ Repair Manual, 2.0 Liter 4-Cyl. 2V Fuel Injection & Ignition, Engine Code(s): ABA m.y. 1995, Repair Group 24

⇒ Repair Manual, 2.0 Liter 4-Cyl. 2V Fuel Injection & Ignition, Engine Code(s): ABA m.y. 1996-1997, Repair Group 24

20-5

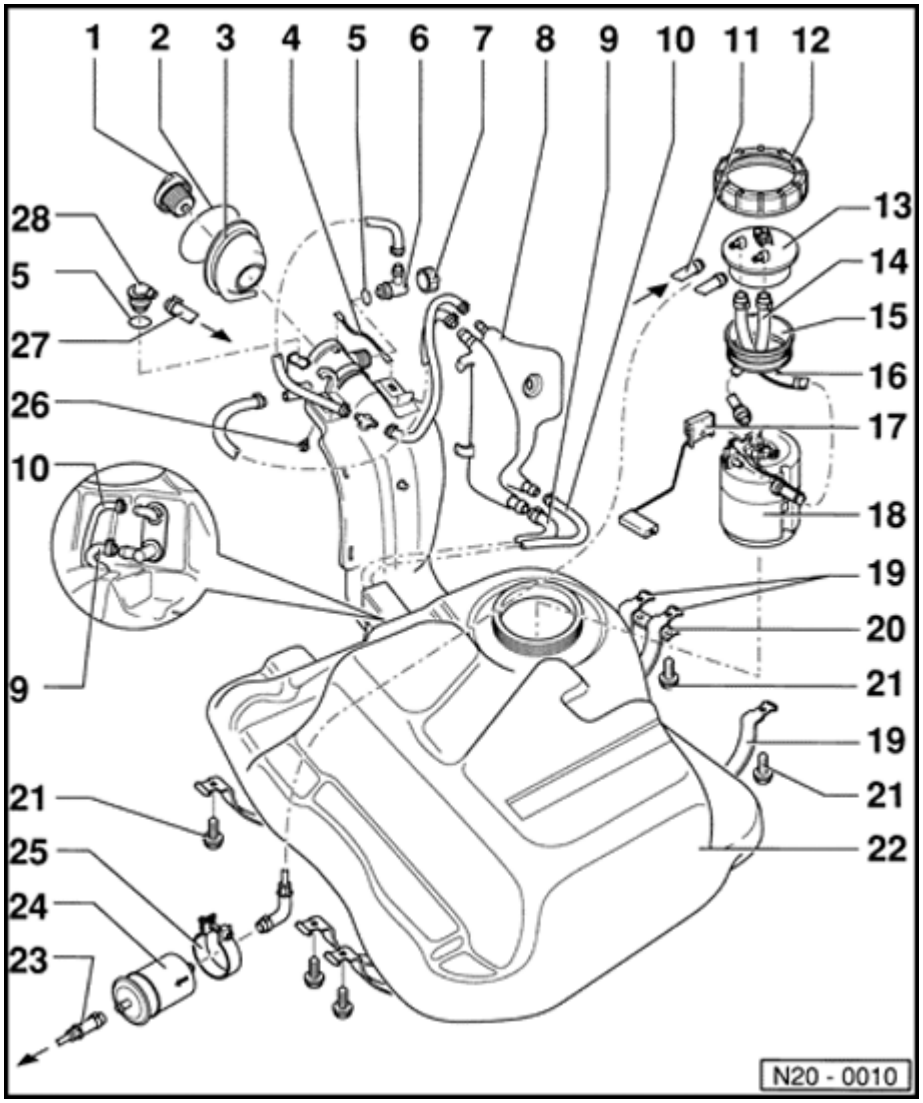

24 - Fuel filter

- Installation position: Arrow on filter points in direction of flow

25 - Retaining clip

26 - 10 Nm (7 ft lb)

27 - Breather hose

- To Evaporative Emissions (EVAP) canister ⇒ Page 20-22 , item 7

28 - Gravity valve

- To remove, unclip valve and remove from filler neck up and out

Check valve:

- Vertical = valve open
- Tilted 45 ° = valve

closed

20-6

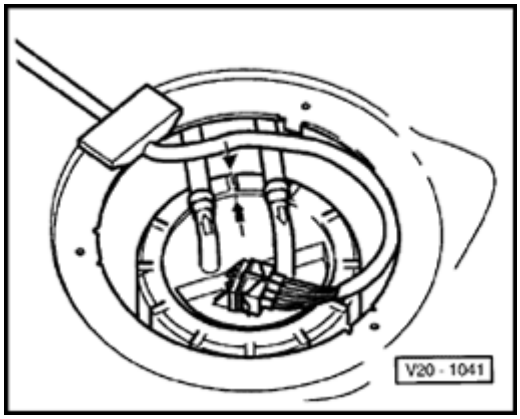

Fig. 1 Installation position fuel pump module flange

- Mark on flange must align with mark on fuel tank

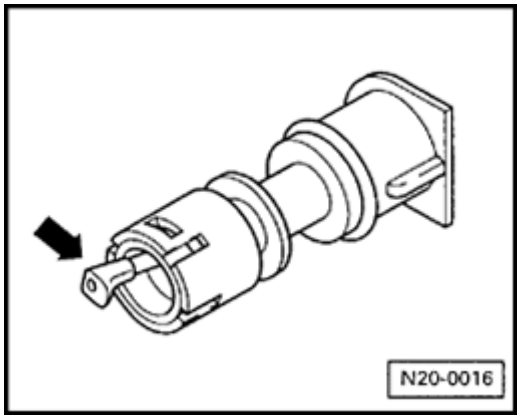

Fig. 2 Checking vent valve

- Lever in rest position: valve closed
- Lever pressed in direction of arrow: valve open

20-7

Safety precautions

WARNING!

When removing and installing the fuel pump or fuel level sensor from a filled or partially filled fuel tank:

- ***Fuel supply lines are under pressure! Before removing, wrap a cloth around the connection. Then release pressure by carefully loosening line at connection.***
- ***BEFORE beginning repairs, the suction pipe of an exhaust extraction system must be located near the fuel tank opening so that escaping fuel vapors can be immediately carried away.***
- ***If no exhaust extraction system is available, a radial fan (motor located outside airflow) with volume of at least 15 m^3/hr (9 cfm) may be used.***
- ***Wear fuel-resistant gloves whenever working with open parts of the fuel system.***

Be sure the ignition is switched OFF, when:

- ***Disconnecting fuel injection system wiring***
- ***Connecting or disconnecting test equipment leads***

BEFORE cranking the engine at starting RPM (such as for compression testing) disable the ignition and fuel injection systems:

- ***Disconnect the ignition coil power output stage.***

- ***Disconnect harness connectors from all fuel injectors.***
- ***After the work is completed, erase Diagnostic Trouble Code (DTC) memory.***

20-8

CAUTION!

BEFORE disconnecting the battery:

- ***Stop the engine.***
- ***Be sure the ignition is switched OFF (also applies when connecting the battery). Failure to do so may damage the Engine Control Module (ECM).***
- ***Be sure of the proper radio code (for vehicles equipped with coded anti-theft radio).***

Be sure the battery negative (-) cable is disconnected, when:

- ***Working on the electrical system***
- ***Resistance (spot) welding or electric arc welding anywhere on the vehicle.***

When connecting and disconnecting electrical test equipment (LED voltage tester, multimeter, etc.):

- ***Be sure the ignition is switched OFF.***
- ***Use correct adapters from the VW 1594 connector test kit.***

20-9

Rules of cleanliness

CAUTION!

Whenever carrying out work on the fuel supply and fuel injection systems, carefully observe the following five rules of cleanliness.

1 - Thoroughly clean fuel system line and hose connections and the surrounding area before disconnecting.

2 - Place removed components on a clean surface and cover. Use plastic sheeting or paper. Do not use fluffy rags that could leave lint!

3 - Carefully cover over or seal any components that have been opened if repairs are not carried out immediately.

4 - Install only clean parts:

Do not remove replacement parts from the packaging until immediately before they are to be installed.

Do not use parts that have been stored without packaging (e.g. in toolboxes, etc.).

5 - When the fuel system is opened:

Avoid working with compressed air whenever possible.

Avoid moving the vehicle if possible.

20-10

Accelerator pedal cable, adjusting

Vehicles with manual transmission

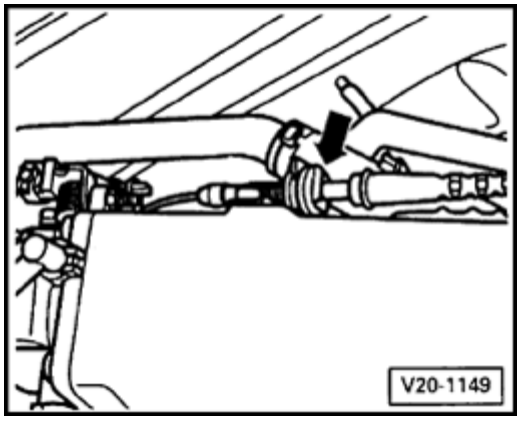

- Adjust accelerator pedal cable by moving retainer (arrow) on support bracket until throttle valve just reaches wide open throttle position when accelerator pedal is fully depressed.

Vehicles with automatic transmission

Special tools, testers and auxiliary items

- 15 mm spacer
- Multimeter (Fluke 83 or equivalent)
- VW 1594 connector test kit

Test sequence

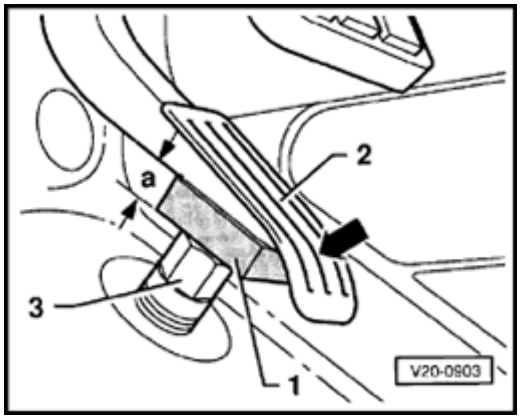

- Place spacer -1- between accelerator pedal -2- and stop -3-, and hold accelerator pedal in this position.

  Dimension -a- = 15 mm (0.59 in.)

20-11

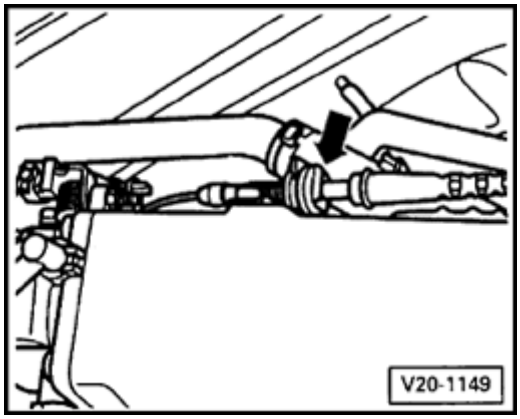

- Adjust accelerator pedal cable by moving retainer (arrow) on support bracket until throttle valve just reaches wide open throttle position when accelerator pedal is fully depressed.
- Release accelerator pedal.

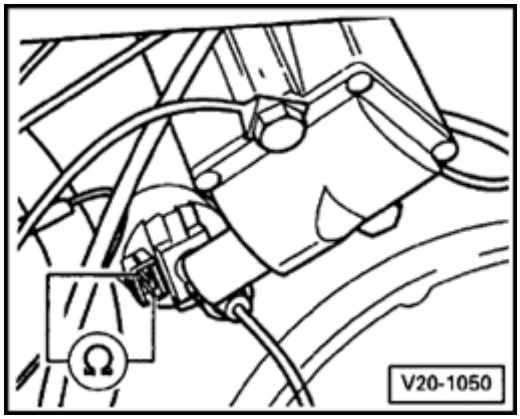

- Connect multimeter to kickdown switch F8 using adapter cables from VW 1594 test kit.
- Measure resistance at switch.

  Specified value: ∞ ohm (no continuity)
- Slowly depress accelerator pedal past kickdown pressure point.
  - Resistance must drop to 0 ohm (continuity)
  - Accelerator pedal must be close to the stop

20-12

Fuel pump module, removing and installing

Special tools, testers and auxiliary items

- Ring nut spanner 3217

Removing

- Observe safety precautions ⇒ Page 20-7

CAUTION!

Determine correct radio anti-theft coding before disconnecting the battery.

- With ignition switched off, disconnect battery negative cable (ground strap).

- Remove cover in luggage compartment floor

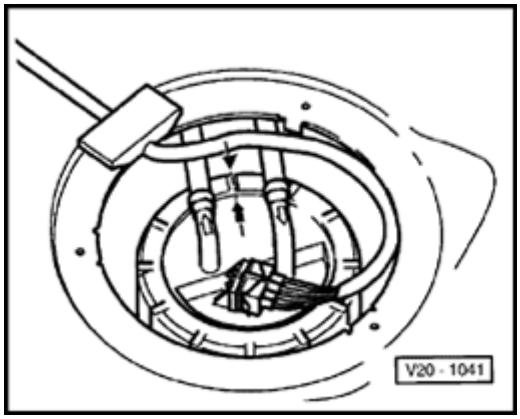

- Disconnect harness connector, fuel supply h and return hose from flange.
- Remove ring nut with 3217.
- Remove flange and sealing ring from fuel tar opening.

- Loosen fuel pump module from bayonet connection by turning to the left and remove.

CAUTION!

If the fuel pump module is still filled with fu empty before replacing.

Installing

Install fuel pump module in reverse order of removal.

Note:

- *When installing the fuel pump module, be s that the fuel level sensor arm is not bent.*
- *Lubricate flange seal with fuel when installing.*
- *Installation position of flange for fuel pump module ⇒ Fig. 1 , ⇒ Page 20-6 .*

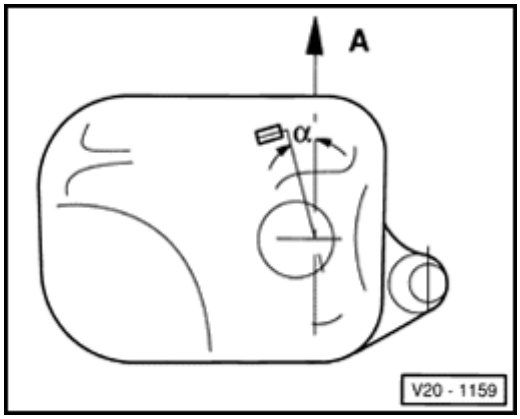

- When the fuel pump module is correctly installed the fuel gauge sender float pointst direction of travel -A-.

Vehicles with front wheel drive:

- Variant α = 5°-10°
- Sedan α = 70°-75°

20-14

Fuel pump, checking

Special tools, testers and auxiliary items

- Remote control VAG 1348/3A with VAG 1348/3-2 adapter cable
- Voltage tester VAG 1527B
- Connector test kit VW 1594
- Ring nut spanner 3217
- Pressure tester VAG 1318
- Adapter 1318/1
- Adapter 1318/10
- Adapter 1318/11
- Measuring container

Test conditions

- Battery voltage OK.
- Fuse No. 18 OK.

20-15

Test sequence

- Switch ignition on.

  - Fuel pump must be heard to run briefly

If the fuel pump does not run:

- Switch ignition off.

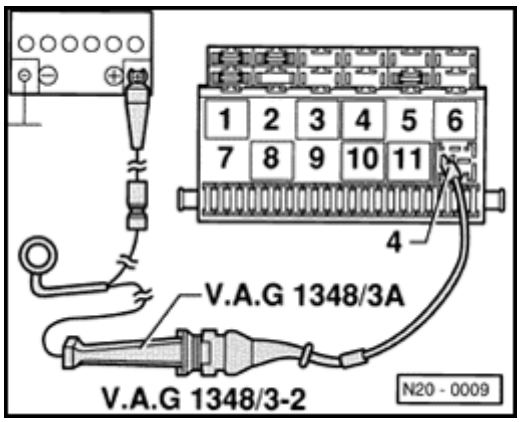

- Remove fuel pump relay J17 from relay panel, position -12-.

CAUTION!

- ***If tools are needed to remove relays or control units from relay panel, first disconnect battery Ground (GND) strap.***
- ***Before disconnecting battery, ALWAYS ask for radio code (if equipped with an anti-theft radio).***

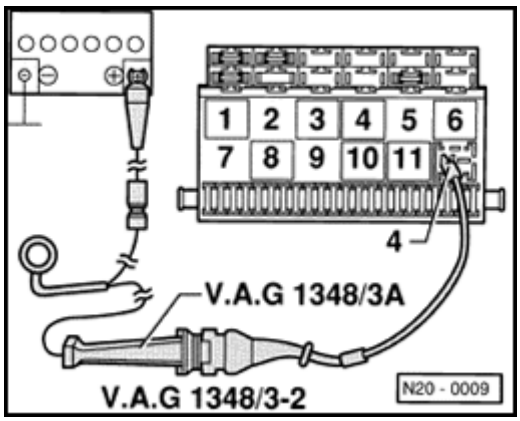

- Connect VAG 1348/3A remote control with VAG 1348/3-2 adapter cable to terminal 4 and battery positive (B+).
- Operate remote control.

If fuel pump runs:

- Check activation of fuel pump relay.

⇒ *Electronic Troubleshooting Manual, VAG 1466 binder*

If OK:

- Replace fuel pump relay J17.

20-16

If fuel pump does not run:

- Remove luggage compartment floor coverin

- Disconnect harness connector from fuel tan flange.

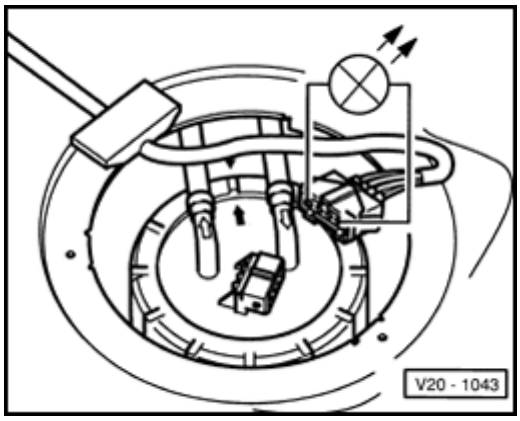

- Connect VAG 1527B voltage tester to the ou terminals of the connector using adapter cab from VW 1594 test kit.
- Operate remote control.
  - LED must light up

If LED does not light up:

- Check for open circuit using wiring diagram.

If LED lights up (voltage supply OK.):

- Unscrew ring nut with 3217.
- Check whether electrical wires between flan and fuel pump are connected.

If no open circuit can be found:

- Replace fuel pump.

20-17

Fuel pump delivery rate, checking

Test conditions

- Voltage supply OK.
- Remote control VAG 1348/3A connected.

Test sequence

- Remove fuel tank filler cap.

WARNING!

Fuel supply lines are under pressure! Before removing, wrap a cloth around the connection. Then release pressure by carefully loosening line at connection.

- Disconnect fuel supply line from fuel rail.

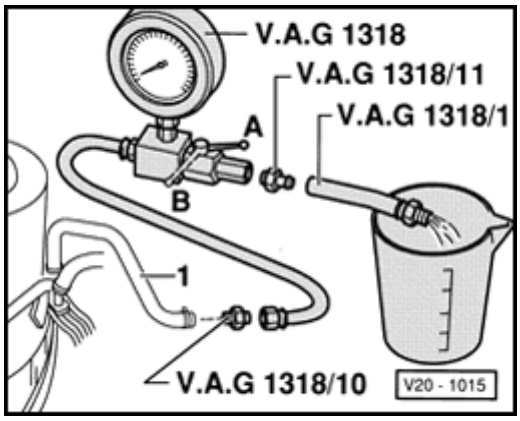

- Connect VAG 1318 pressure gauge with 1318/10 adapter to the fuel supply hose -1-.
- Attach VAG 1318/1 hose onto the VAG 1318/11 adapter and connect to the pressure gauge, hold in measuring container.
- Open shut-off valve on pressure gauge. (Lever then points in the direction of flow -A-).

20-18

- Operate VAG 1348/3A remote control and slowly close shutoff valve, until pressure gau shows 1.2 bar (17 psi). Do not change positi of shut-off valve.

- Empty measuring container.

- Connect multimeter to vehicle battery using adapter cables from VW 1594 test kit, then measure and record voltage.

- Operate remote control for 30 seconds.

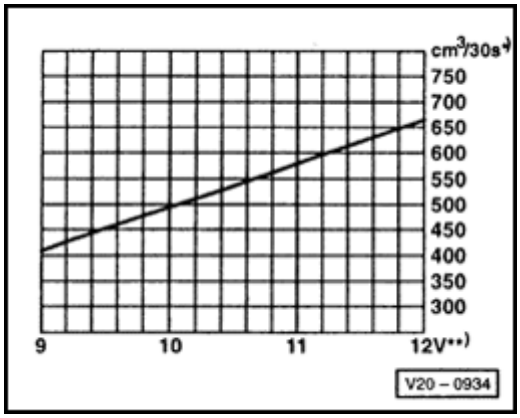

- Compare fuel quantity with specified value.

* - Minimum fuel amount measured in cm^3/30 seconds

** - Voltage at fuel pump with engine OFF and pump running - approx. 2 volts less than batte positive voltage (B+).

Example:

During the test, 12.5 volts is measured at the battery. As the voltage at the pump is approx. 2 volts less than the battery voltage then this will equate to a minimum delivery rate of 530 cm^3/ seconds.

20-19

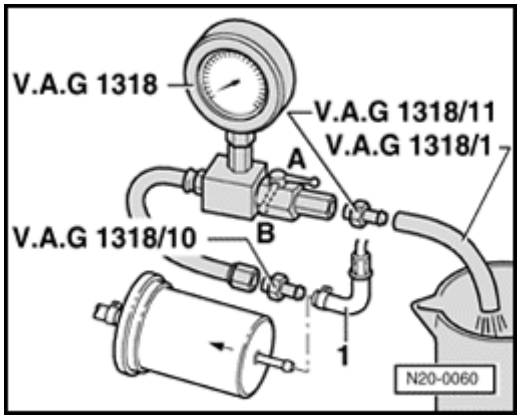

If the minimum delivery rate is not reached:

- Check the fuel lines and hoses for possible restrictions (kinks) or blockages.

- Disconnect supply hose -1- from inlet to fuel filter.
- Connect VAG 1318 pressure gauge to hose 1318/10 adapter.
- Repeat delivery rate check.

If the minimum delivery rate is now attained:

- Replace fuel filter.

If NOT:

- Remove fuel pump module and check for clogged fuel pick-up strainer.

If no other malfunction has been detected:

- Replace the fuel pump module.

20-20

If the correct delivery rate has been reached, b
you still suspect a fuel supply system malfuncti
(e.g. intermittent failure of fuel supply system):

- Carry out a current draw test of the fuel pum
follows:

  - Reconnect all disconnected fuel hoses/line

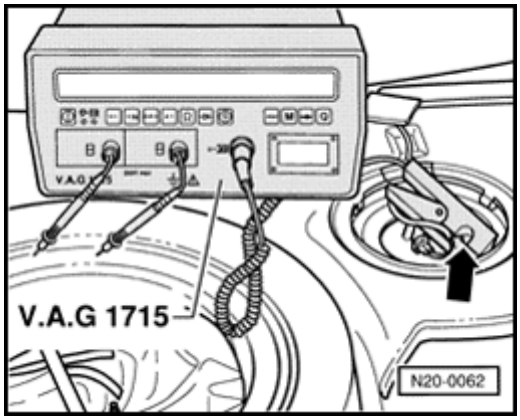

  - Connect a multimeter (Fluke 83 or equival
using the current clamp to the red/yellow w
from wiring harness.
  - Start the engine and run at idle.
  - Measure the current draw of the fuel pump

  Specification: max. 8 amps

Note:

*If the fuel system malfunction is intermittent, yo
can perform this check during a test drive. The
assistance of a 2nd person is required.*

If the current draw is exceeded:

- Replace the fuel pump module.

20-21

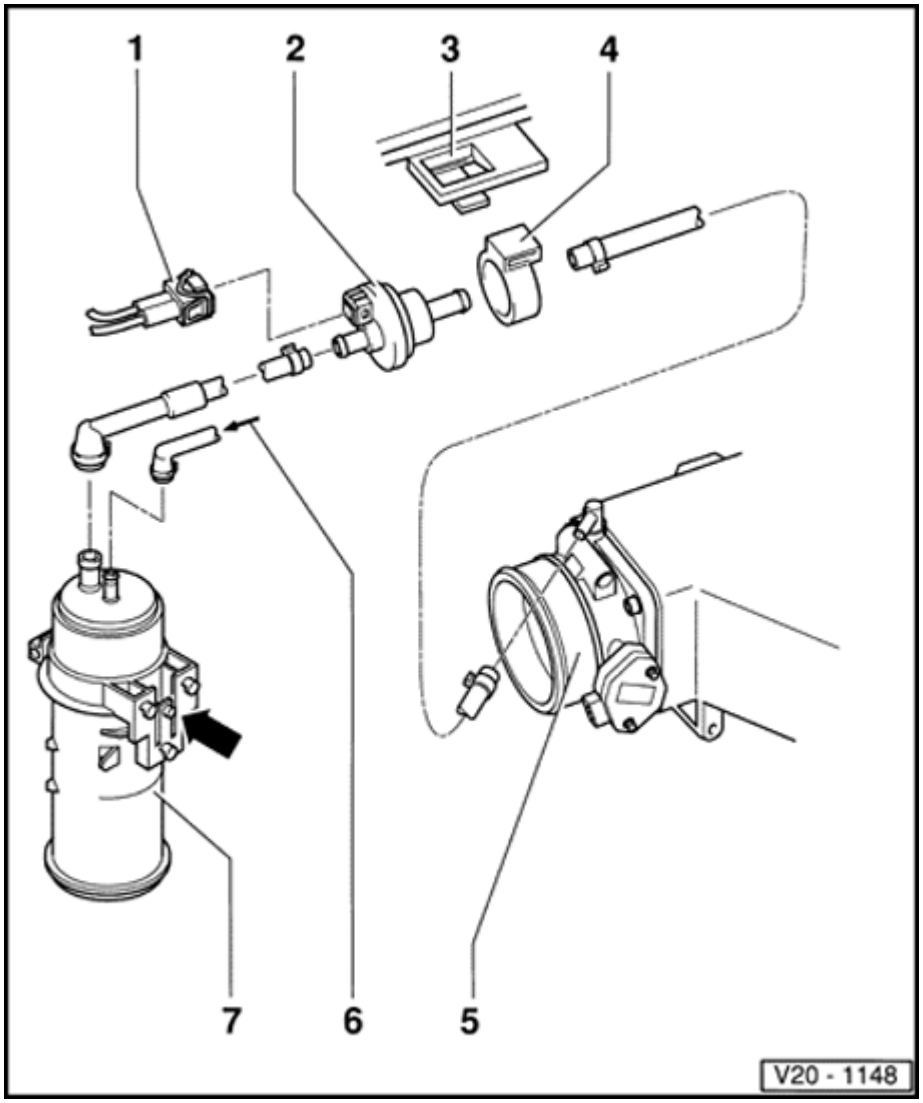

Evaporative Emissions (EVAP) system

Components, removing and installing

1 - Connector

2 - EVAP canister purge regulator valve -N80-

- Valve opens approx. 5 seconds after ignition is switched off
- With engine warm, valve is activated by Motronic ECM
- Checking:

⇒ *Repair Manual, 2.0 Liter 4-Cyl. 2V Fuel Injection & Ignition, Engine Code(s): ABA m.y. 1995, Repair Group 01*

⇒ *Repair Manual,*

2.0 Liter 4-Cyl. 2V Fuel Injection & Ignition, Engine Code(s): ABA m.y. 1996-1997, Repair Group 01

Engines up to 07.95

- Color: blue

Engines from 08.95

- Color: black

3 - Bracket

- On air cleaner housing, lower

4 - Retainer

20-22

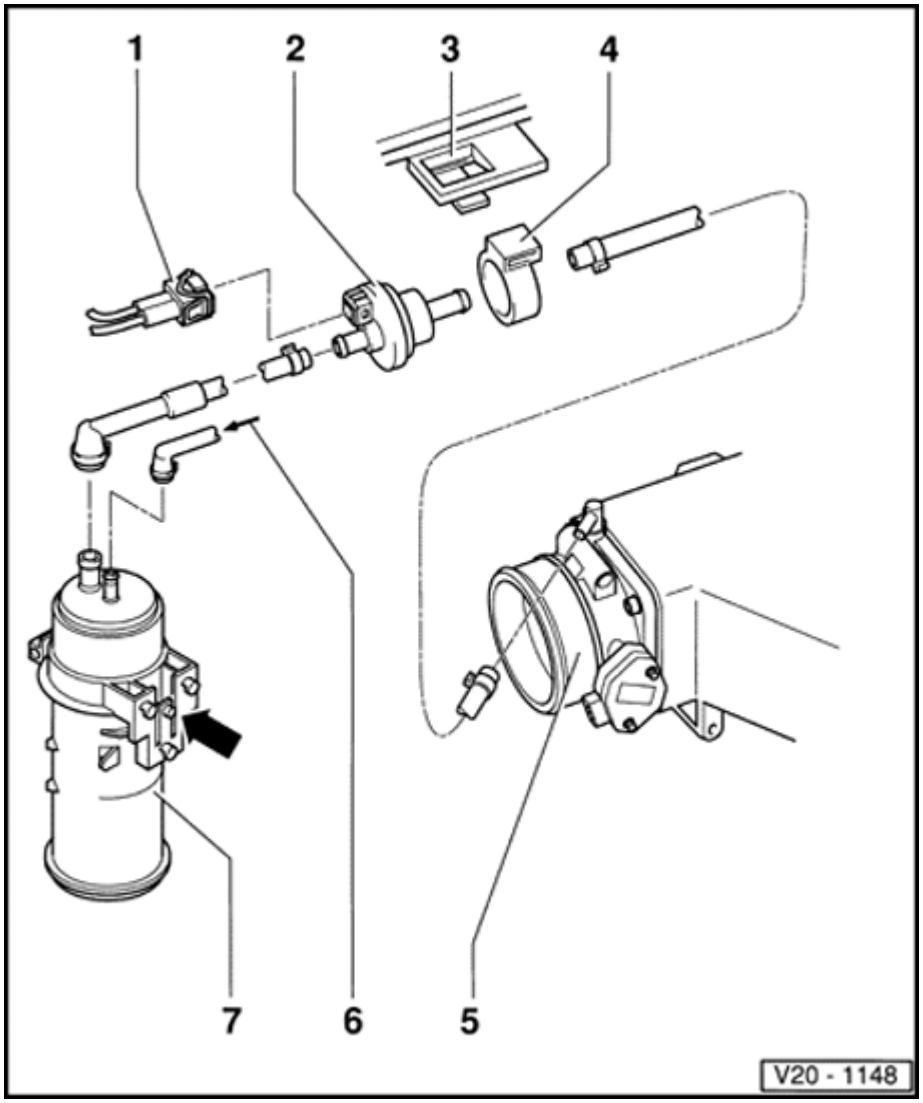

5 - Throttle valve

6 - Breather hose

- From gravity valve ⇒ page 20-5

7 - EVAP canister

- Right front wheel housing

- Removing: press safety clasp in direction of (arrow)

20-23

Fuel tank breather, checking

Special tools, testers and auxiliary items

- Hand vacuum pump US 8026

Test conditions

- Ignition switched off

Test sequence

- Remove air cleaner:

⇒ *Repair Manual, 2.0 Liter 4-Cyl. 2V Fuel Injection & Ignition, Engine Code (s): ABA m.y. 1995, Repair Group 24*

⇒ *Repair Manual, 2.0 Liter 4-Cyl. 2V Fuel Injection & Ignition, Engine Code (s): ABA m.y. 1996-1997, Repair Group 24*

Engines up to 07.95 (blue valve)

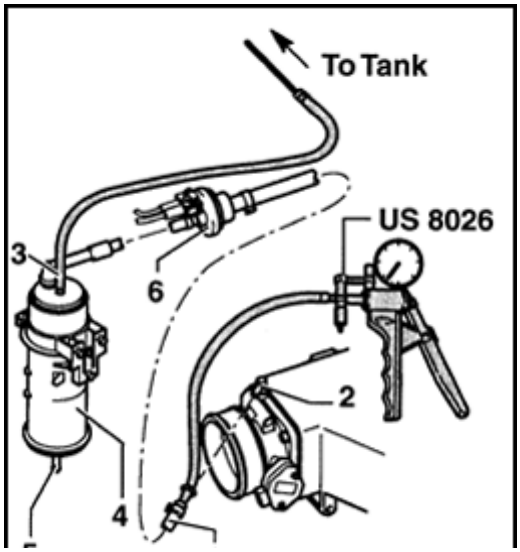

- Disconnect hose -1- from EVAP canister regulator valve -6- off throttle valve housing -2- and connect vacuum pump US 8026 to hose -1-.

Engines from 08.95 (black valve OBD II)

- Disconnect hose -1- from EVAP canister -4- at purge regulator valve -6- and connect vacuum pump US 8026 to hose -1-.
- Disconnect hose -3- (from fuel tank)

from EVAP canister -4- and plug port on canister.

- Operate hand vacuum pump US 8026 several times.

20-24

- Vacuum must not build-up

If vacuum builds-up:

- Check breather connection -5- on EVAP car
  -4- for contamination, clean if necessary.

- Remove plug from EVAP canister port.

- Check EVAP canister purge regulator valve
  N80- -6- for continuity, and replace if necess
  (Applies to vehicles up to 07.95 blue valve o

If vacuum does not build-up:

- Remove fuel tank filler cap.

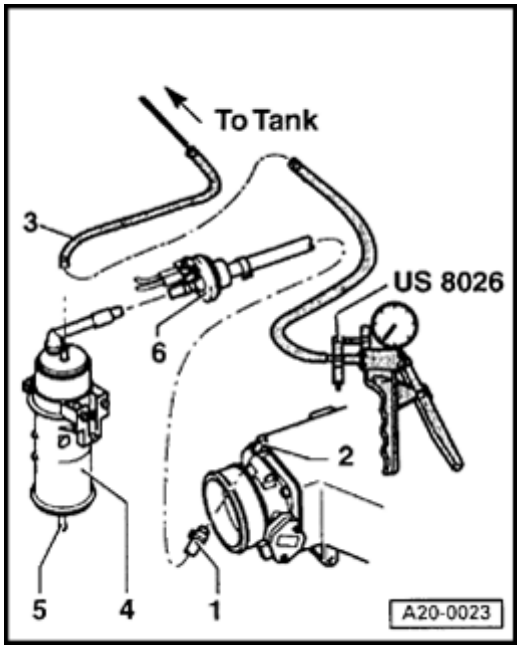

- Connect hand vacuum pump US 8026 to
  breather hose -3- from fuel tank (previously
  removed from EVAP canister -4-)
- Operate hand vacuum pump US 8026 sever
  times.
- Vacuum must not build-up

If vacuum builds-up:

- Check gravity valve ⇒ Page 20-5
- Check line -3- from fuel tank for blockage.

If vacuum does not build-up:

- Re-install fuel tank filler cap.

20-25

- Operate hand vacuum pump US 8026 several times.

  - Vacuum must not build-up

Note:

If the fuel level in the tank is low, hand vacuum pump may need to be operated at least 20-30 times.

If vacuum builds-up:

- Replace fuel tank cap.

Exhaust system removal and installation

Exhaust manifold, front exhaust pipe and Three Way Catalytic Converter (TWC) ⇒ Page 26-2

Muffler assembly and mounts ⇒ Page 26-7

Exhaust Gas Recirculation (EGR) system ⇒ Page 26-10

Checking Secondary Air Injection (AIR) system ⇒ Page 26-16

CAUTION!

Always replace self-locking nuts.

Note:

- *After repairs be sure that the exhaust system is not under tension and that there is sufficient clearance between the exhaust system and the body.*
- *If necessary, loosen all clamps and align muffler and exhaust pipes for sufficient clearance and even load distribution at all mounting rings.*

26-2

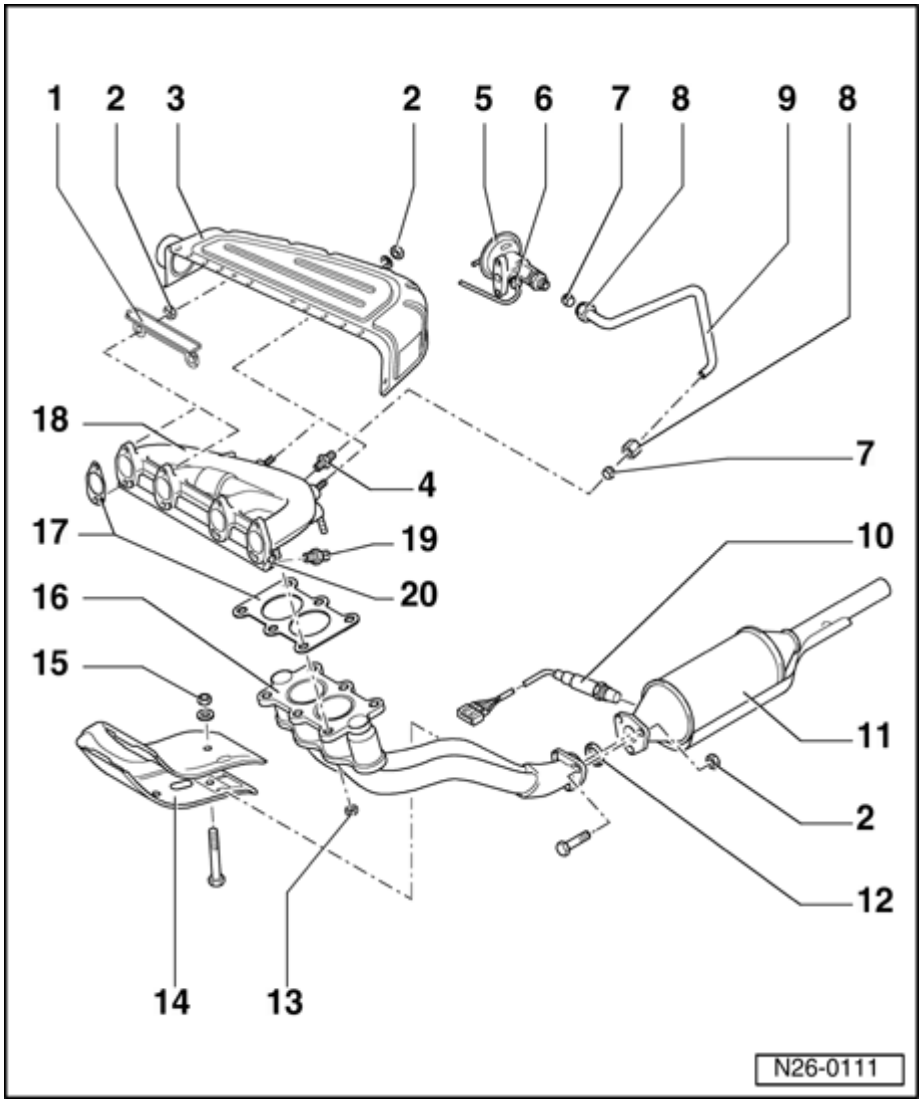

Exhaust manifold, front exhaust pipe and Three Way Catalytic Converter (TWC), removing and installing

Vehicles up to 07.95

1 - Bracket

- For heat deflector

2 - 25 Nm (18 ft lb)

3 - Heat deflector

4 - 35 Nm (26 ft lb)

5 - EGR valve

- ⇒ Page 26-10 , Item 7

6 - EGR temperature sensor

- Additional information ⇒ Page 26-10 , item 1

7 Compression - ring

8 - 30 Nm (22 ft lb)

9 - EGR tube

26-3

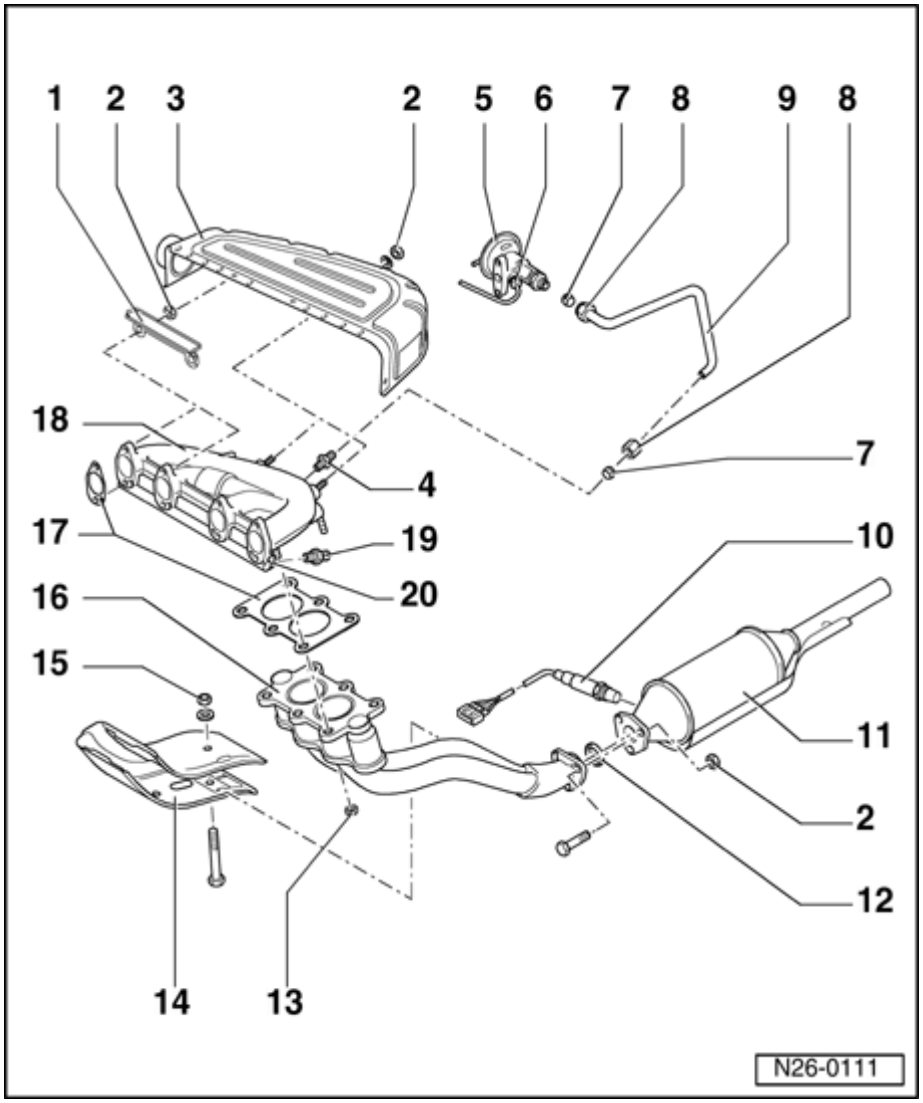

10 - Heated Oxygen Sensor (HO2S)

- 50 Nm (37 ft lb)
- Lube threads with "G5": "G5" must not get into or near sensor slots
- Remove and install with 3337
- Checking

⇒ *Repair Manual, 2.0 Liter 4-Cyl. 2V Fuel Injection & Ignition, Engine Code(s): ABA m.y. 1995, Repair Group 24*

11 - Three Way Catalytic Converter

12 - Sealing ring

- Always replace

13 - 40 Nm (30 ft lb)

- Tightening

sequence ⇒ Page 26-6 , ⇒ Fig. 1

14 - Heat shield

15 - 10 Nm (7 ft lb)

16 - Front exhaust pipe

17 - Gasket

- Always replace

18 - Exhaust manifold

19 - 35 Nm (26 ft lb)

- Fitting ⇒ Page 26-18 , item 15

20 - Secondary air intake

26-4

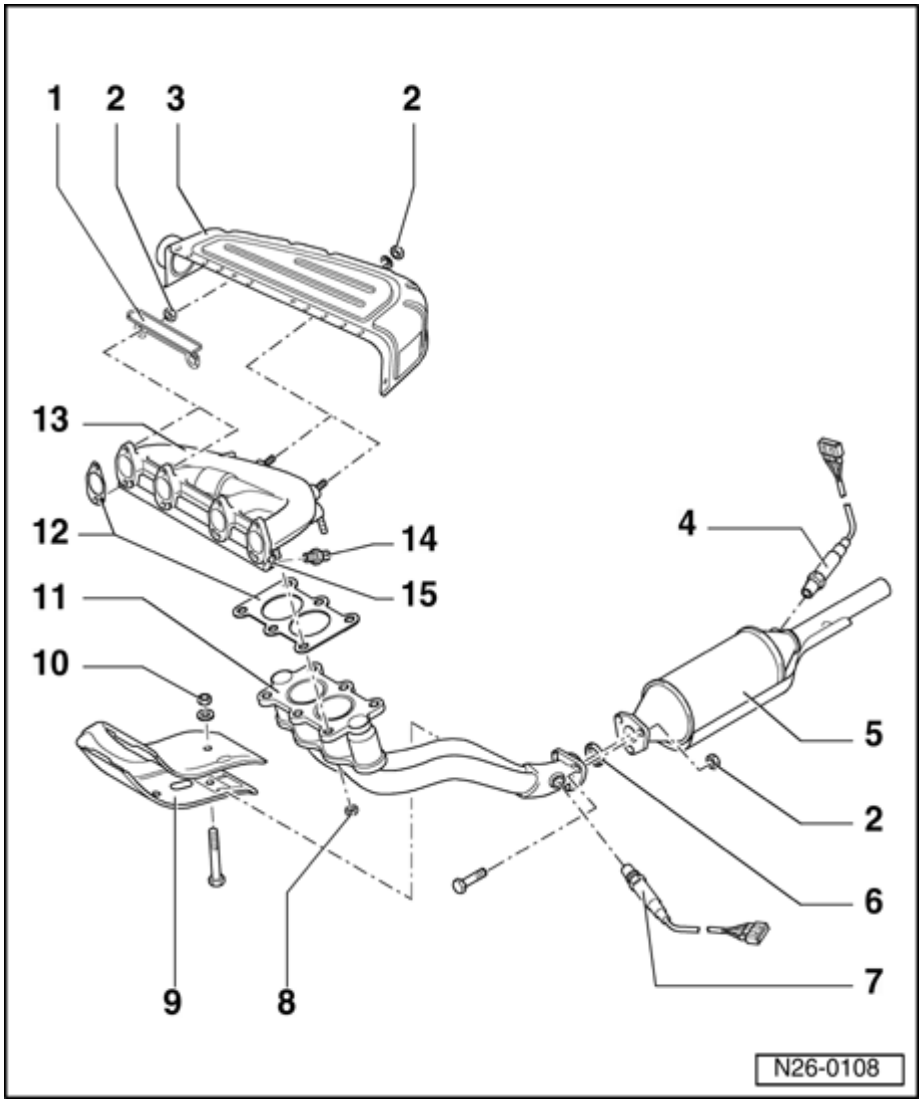

Vehicles from 08.95

1 - Bracket

- For heat deflector

2 - 25 Nm (18 ft lb)

3 - Heat deflector

4 - Heated Oxygen Sensor (HO2S) 2

- 50 Nm (37 ft lb)
- Installation location: after three way catalytic converter
- Lubricate threads with "G5"
- "G5" must not get into or near slots of sensor
- Remove and install with 3337
- Checking:

⇒ *Repair Manual, 2.0 Liter 4-Cyl. 2V*

Fuel Injection & Ignition, Engine Code(s): ABA m.y. 1995, Repair Group 24

⇒ *Repair Manual, 2.0 Liter 4-Cyl. 2V Fuel Injection & Ignition, Engine Code(s): ABA m.y. 1996-1997, Repair Group 24*

5 - Three Way Catalytic Converter (TWC)

6 - Sealing ring

- Always replace

26-5

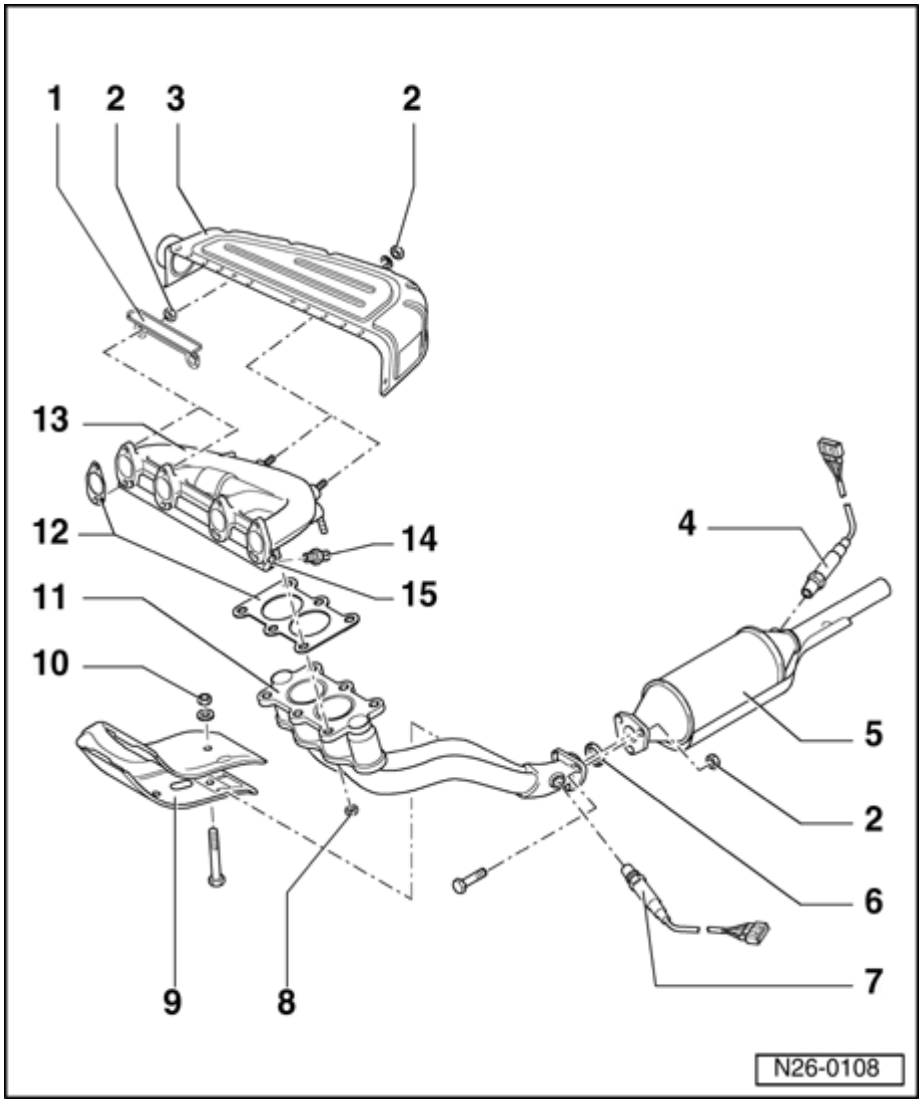

7 - Heated Oxygen Sensor (HO2S) 1

- 50 Nm (37 ft lb)
- Installation location: before three way catalytic converter
- Lube threads with "G5": "G5" must not get into or near sensor slots
- Remove and install with 3337
- Checking:

⇒ Repair Manual, 2.0 Liter 4-Cyl. 2V Fuel Injection & Ignition, Engine Code(s): ABA m.y. 1995, Repair Group 24

⇒ Repair Manual, 2.0 Liter 4-Cyl. 2V Fuel Injection & Ignition, Engine Code(s): ABA m.y. 1996-1997,

Repair Group 24

8 - 40 Nm (30 ft lb)

- Tightening sequence ⇒ Fig. 1

9 - Heat shield

10 - 10 Nm (7 ft lb)

11 - Front exhaust pipe

12 - Gasket

- Always replace

13 - Exhaust manifold

14 - 35 Nm (26 ft lb)

- Fitting ⇒ Page 26-21 , item 15

15 - Secondary air intake

26-6

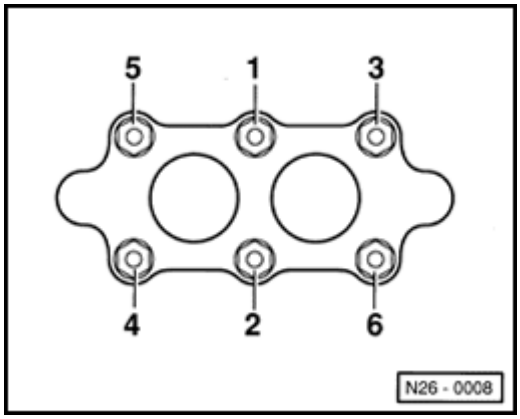

Fig. 1 Exhaust pipe/manifold tightening sequence

26-7

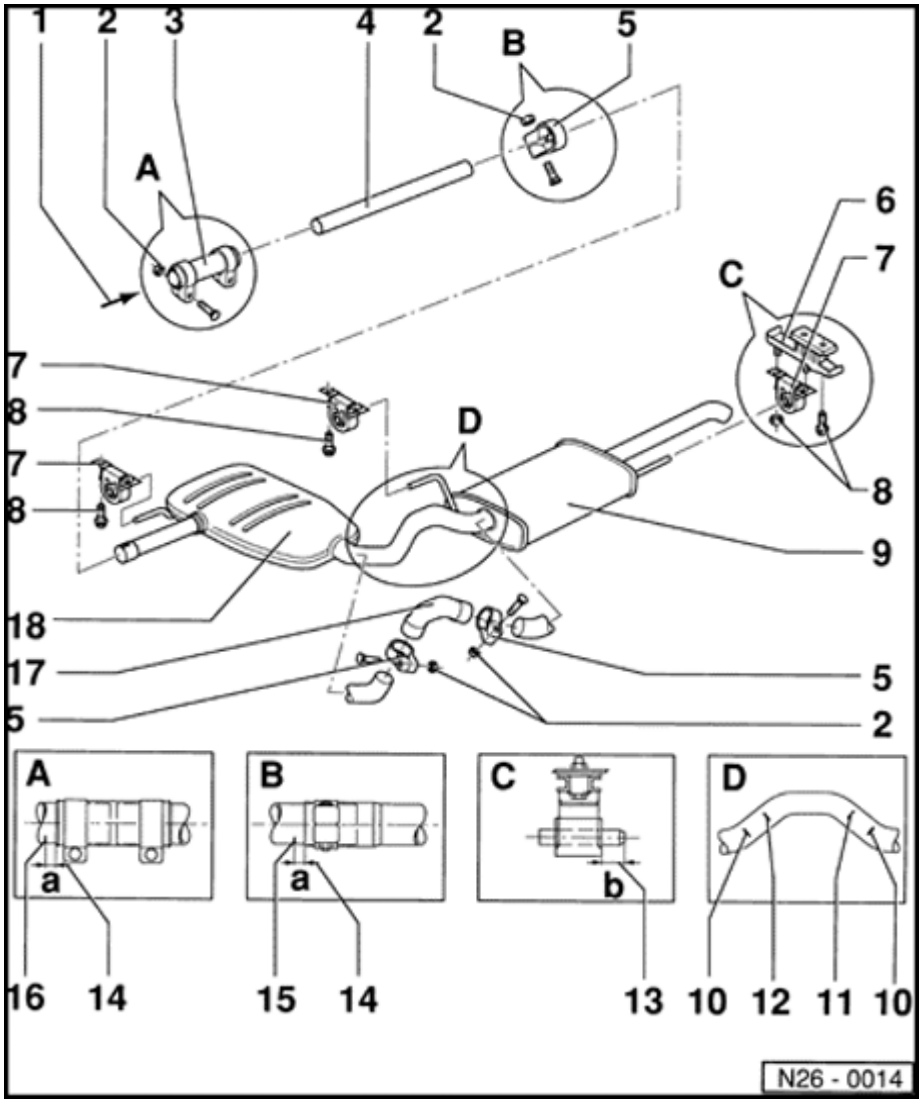

Muffler assembly and mounts

Note:

The exhaust system must be aligned lengthwise so that the dimensions -a-, -b- and -c- are maintained.

1 - From TWC

2 - 40 Nm (30 ft lb)

3 - Double clamp

4 - Intermediate pipe

5 - Clamp

6 - Hanger

7 - Mount

8 - 25 Nm (18 ft lb)

9 - Rear muffler

10 - Marking

- For clamp
- Marked three times on pipe circumference
- Distance from clamp to

marking =
dimension
a, - 14 -

26-8

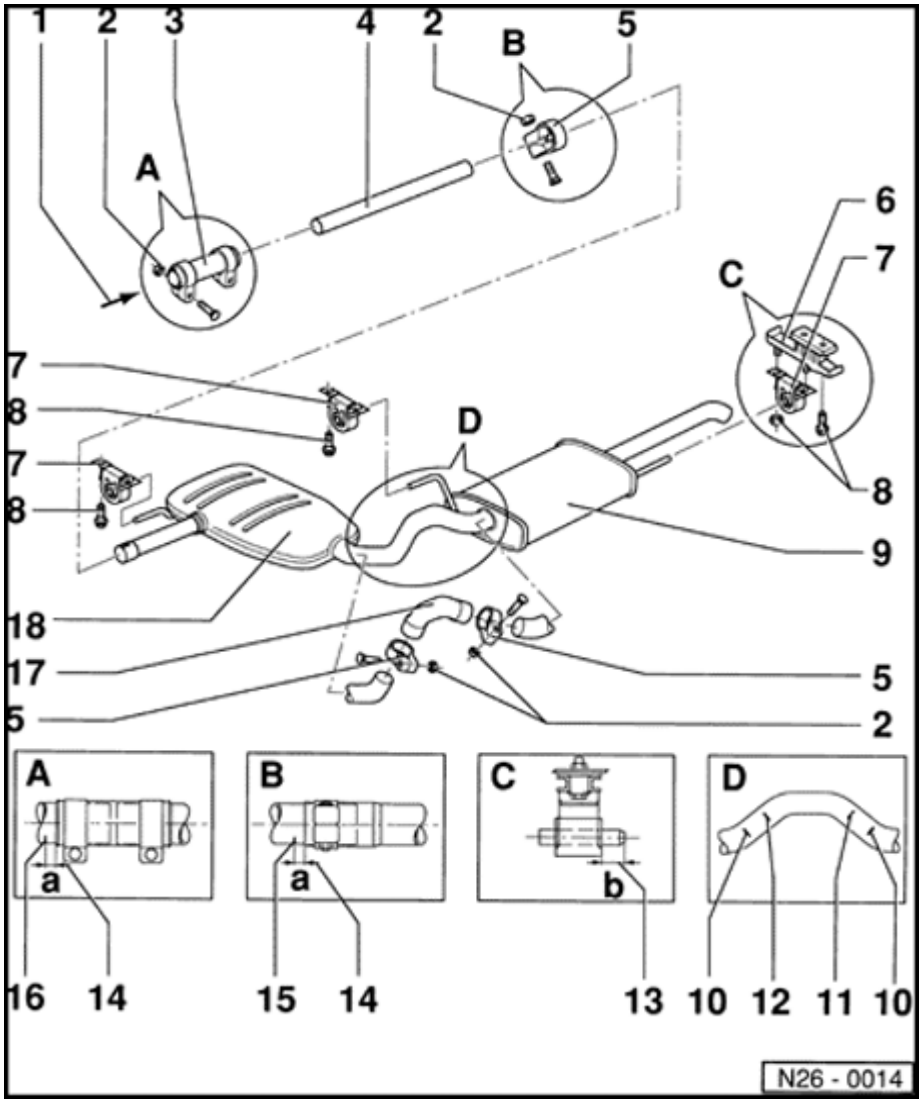

11 - Cutting point

- For repair to individual exhaust components
  - When replacing center muffler
- Marked by three impressions on circumference of connecting pipe
  - Cut through connecting pipe with hack saw (e.g. VAG 1523) at right angle, at cutting point.

12 - Cutting point

- For repair to individual exhaust components
  - When replacing rear muffler
- Marked by three impressions

on circumference of connecting pipe

- In production, center and rear muffler are installed as one part. For repairs, center and rear mufflers and a connecting pipe with two clamps are supplied individually.
- Cut through connecting pipe with hack saw (e.g. VAG 1523) at right angle, at cutting point.

26-9

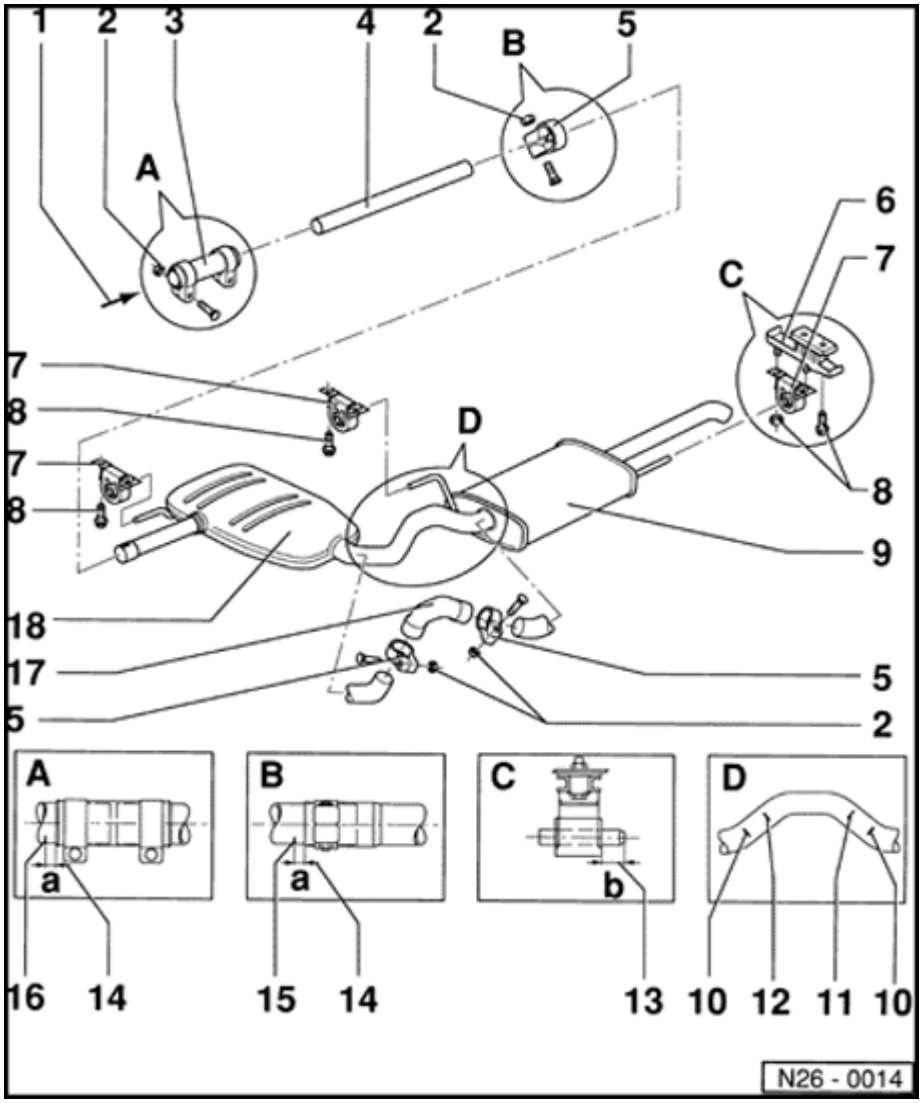

13 - Dimension -b-

- Approx. 10 mm (0.39 in.)

14 - Dimension -a-

- Approx. 5 mm (0.20 in.)

15 - Marking

- Marked three times on pipe circumference

16 - Marking

- Marked three times on pipe circumference
  - S = Manual transmission
  - A = Automatic transmission

17 - Connecting pipe

- For repair to individual exhaust components
  - In production, center and rear muffler are installed as one part. For repairs, center and rear

mufflers and a connecting pipe with two clamps are supplied individually.

18 - Center muffler

26-10

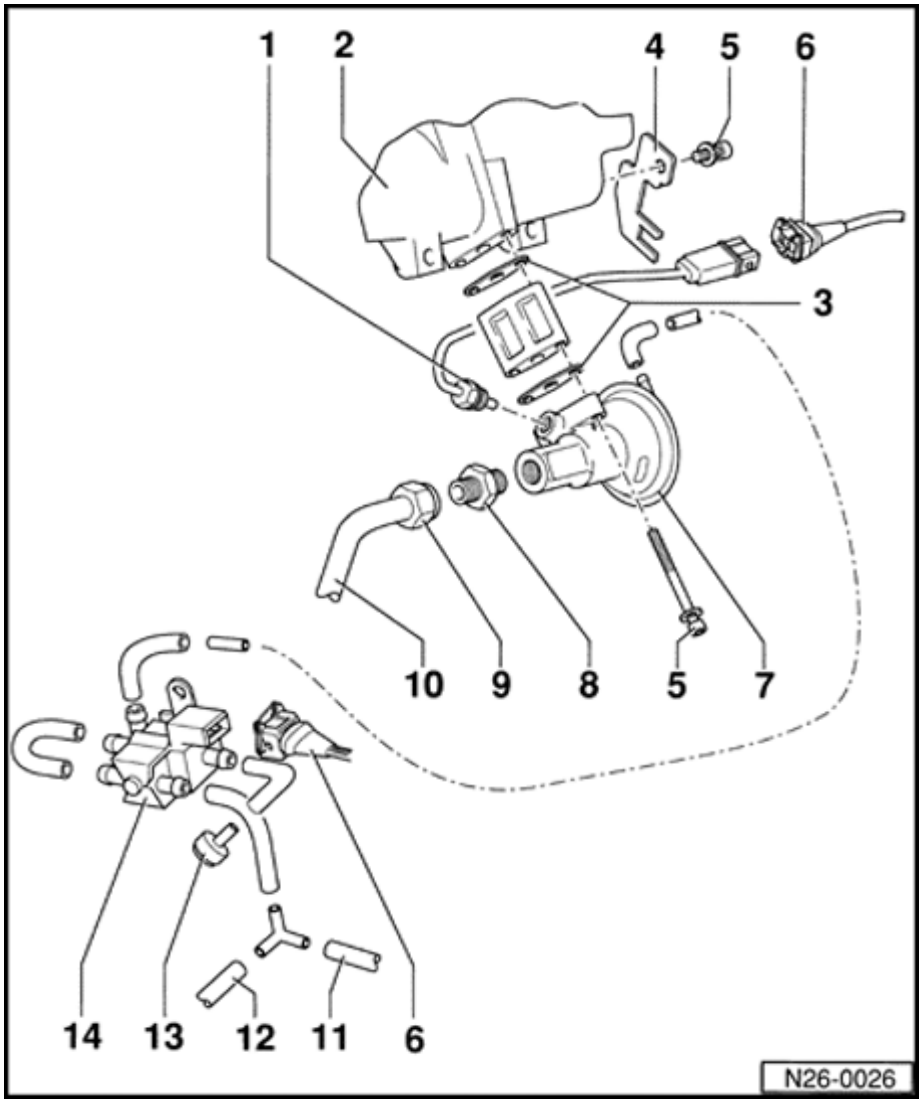

Exhaust Gas Recirculation (EGR) system

Vehicles up to 07.95 only

Note:

The function of the EGR system is monitored by the On Board Diagnostic system of the Motronic Engine Control Module (ECM) J220.

1 - EGR temperature sensor -G98-

- Checking ⇒ Page 26-12

2 - Intake manifold, upper

3 - Gasket

- Always replace

4 - Bracket

5 - 10 Nm (7 ft lb)

6 - Connector

7 - EGR valve

- Checking ⇒ Page 26-12

8 - 35 Nm (26 ft lb)

26-11

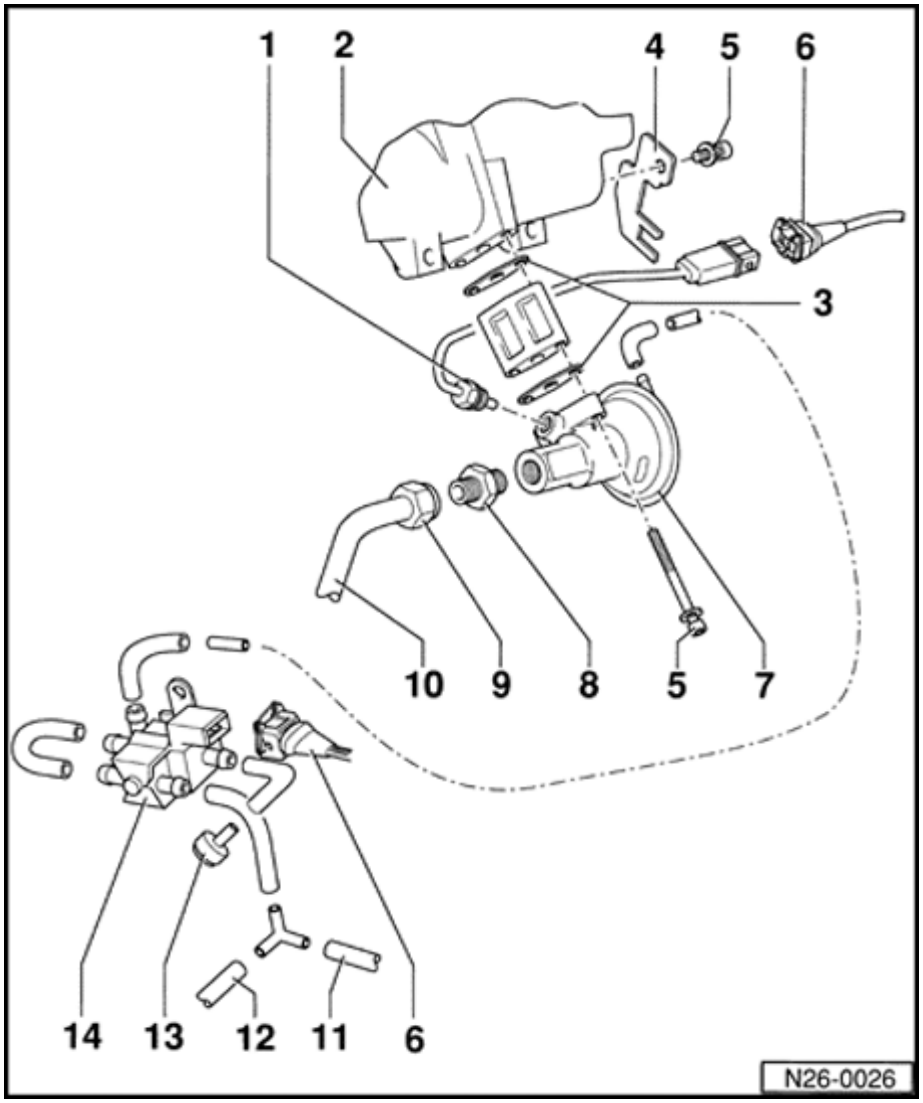

9 - 30 Nm (22 ft lb)

10 - To exhaust manifold

11 - To intake manifold, upper

12 - To air cleaner housing, upper

13 - Air Cleaner (ACL)

- Dirty air cleaner element can cause poor engine performance

14 - EGR vacuum regulator solenoid valve - N18-

- Checking:

⇒ *Repair Manual, 2.0 Liter 4-Cyl. 2V Fuel Injection & Ignition, Engine Code(s): ABA m.y. 1995, Repair Group 01*

26-12

Exhaust Gas Recirculation (EGR) valve and EGR temperature sensor, checking

Vehicles up to 07.95 only

Checking activation of the EGR valve N18:

⇒ *Repair Manual, 2.0 Liter 4-Cyl. 2V Fuel Injection & Ignition, Engine Code(s): ABA m.y. 1995, Repair Group 01*

Special tools, testers and auxiliary items

- VAG 1551 Scan Tool (ST) with VAG 1551/3 adapter cable
- US 8026 hand vacuum pump
- VAG 1598/18 test box
- VW 1594 connector test kit
- Multimeter (Fluke 83 or equivalent)

Test conditions

- No leaks in vacuum lines and hose connections
- Vacuum lines not blocked or kinked
- Engine oil temperature at least 50 °C (122 °F)
- VAG 1551 scan tool connected; "Engine Electronics" address word 01, "Read

Measuring Value Block" function 08;
Display Group 002

⇒ *Repair Manual, 2.0 Liter 4-Cyl. 2V Fuel Injection & Ignition, Engine Code(s): ABA m.y. 1995, Repair Group 01*

26-13

Test sequence

- VAG 1551 in "Read Measuring Value Block" function 08
- Engine idling

Read measuring value block 2 →

1 2 3 4

Indicated on display: (1, 2, 3 and 4 = Display fields)

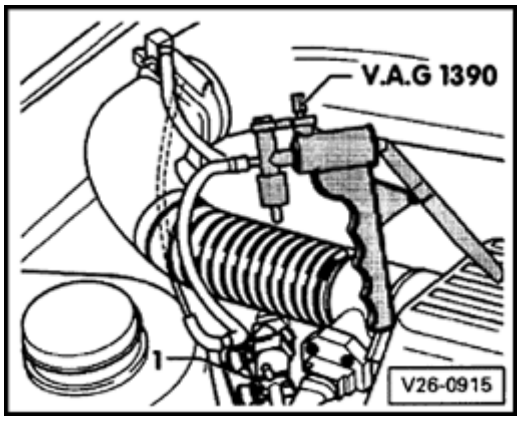

- Disconnect EGR valve vacuum hose from EGR vacuum regulator solenoid valve -1-.
- Connect US 8026 vacuum pump to valve.
- Operate vacuum pump to apply vacuum.
  - Idle characteristics must get noticeably worse.

If NO:

- Check lines and connections for obstructions, clean if necessary.
- If necessary, replace EGR valve.

26-14

If the idle gets worse:

- Read EGR temperature in display field 4.

  - Temperature must rise steadily without interruption

  The value 127.4 ° C will be displayed if there an interruption, or until this temperature is reached.

- As soon as display reaches 200 ° C, disconn vacuum pump.

- Press → button.

- Press buttons -0- and -6- to select "End Out function 06.

- Press -Q- button to confirm input.

If the displayed temperature value does not change:

- Switch ignition off.

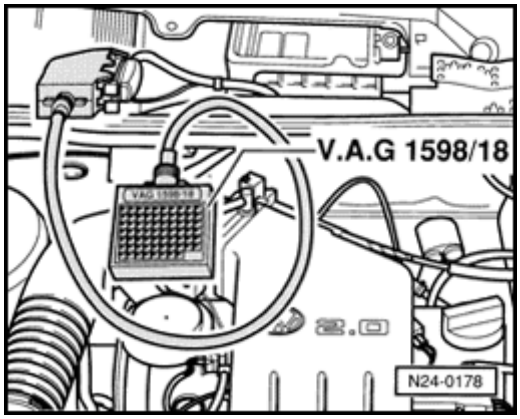

- Connect VAG 1598/18 test box to ECM wirir harness.
- Disconnect 2-pin harness connector from E temperature sensor.
- Check wiring for open circuit between test b and 2-pin connector according to wiring diagram.

♦ Terminal 1 and test box socket 15

♦ Terminal 2 and test box socket 33

♦ Resistance: Max. 1.5 Ω.

26-15

- Check wiring between ECM harness connector and 2-pin connector terminal 1 for short circuit to terminal 2 and/or to ground, according to wiring diagram.

  - Terminal 1 and test box socket 33

  - Specification: ∞ Ω (no continuity)

- In addition check wiring for short circuit to battery positive (B+).

  Specification: ∞ Ω (no continuity)

If no wiring malfunction is found:

- Replace EGR temperature sensor -G98- ⇒ Page 26-10 .

26-16

Secondary Air Injection (AIR) system

Function

Vehiclesup to 07.95

The Secondary Air Injection (AIR) system directs air in behind the exhaust valve for approx. 30 seconds during a cold start (engine coolant temperature 15 ° to 35 °C or 59 ° to 95 °F). The extra air creates an oxygen-rich exhaust gas, increases secondary burning and reduces the heat-up time for the Three Way Catalytic Converter (TWC).

Activation is initiated by the Motronic Engine Control Module (ECM) J220, via the secondary air injection pump relay J299, to the secondary air injection solenoid valve N112, check valve and combi-valve. In addition to operating during cold-start, the AIR system is switched on at idle.

The secondary air injection system is checked by the On Board Diagnostic program (up to max. 60 °C or 140 °F engine coolant temperature).

Vehicles from 08.95

If the readiness code is being created, engine coolant temperature can also be above 80 °C (176 °F). Creating readiness codes:

⇒ *Repair Manual, 2.0 Liter 4-Cyl. 2V Fuel Injection & Ignition, Engine Code(s): ABA m.y. 1995, Repair Group 01*

⇒ *Repair Manual, 2.0 Liter 4-Cyl. 2V Fuel Injection & Ignition, Engine Code(s): ABA m.y.*

1996-1997, Repair Group 01

26-17

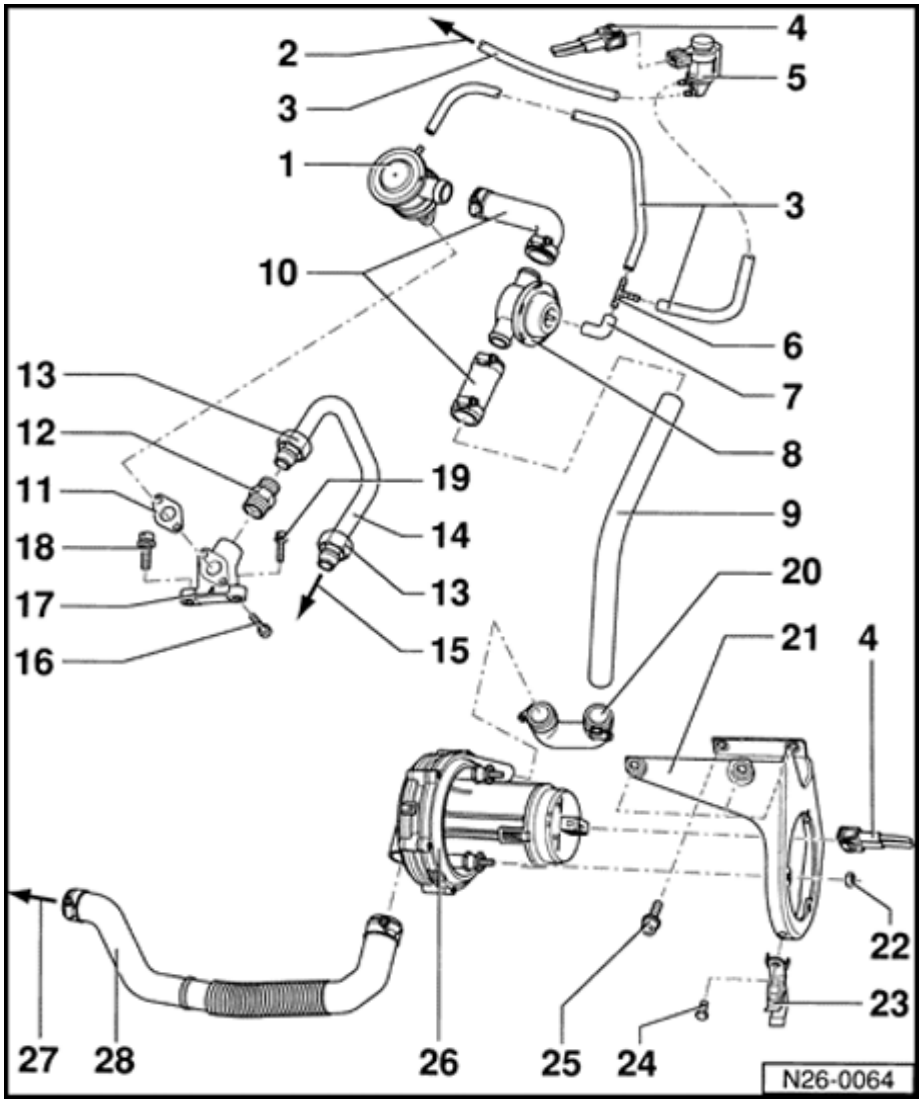

Secondary Air Injection (AIR) system components, removing and installing

Vehicles up to 07.95

Note:

- *The complete system is checked by the On Board Diagnostic program.*

⇒ Repair Manual, 2.0 Liter 4-Cyl. 2V Fuel Injection & Ignition, Engine Code(s): ABA m.y. 1995, Repair Group 01

- *Components marked with a double asterisk (**) are checked during the Output Diagnostic Test Mode (DTM).*

⇒ Repair Manual, 2.0 Liter 4-Cyl. 2V Fuel Injection & Ignition, Engine Code(s): ABA m.y. 1995, Repair Group 01

1 - Combi-valve

- Checking ⇒ Page 26-23

2 - To connection on hose to vacuum brake booster

3 - Vacuum hose

4 - Harness connector

- 2-pin

26-18

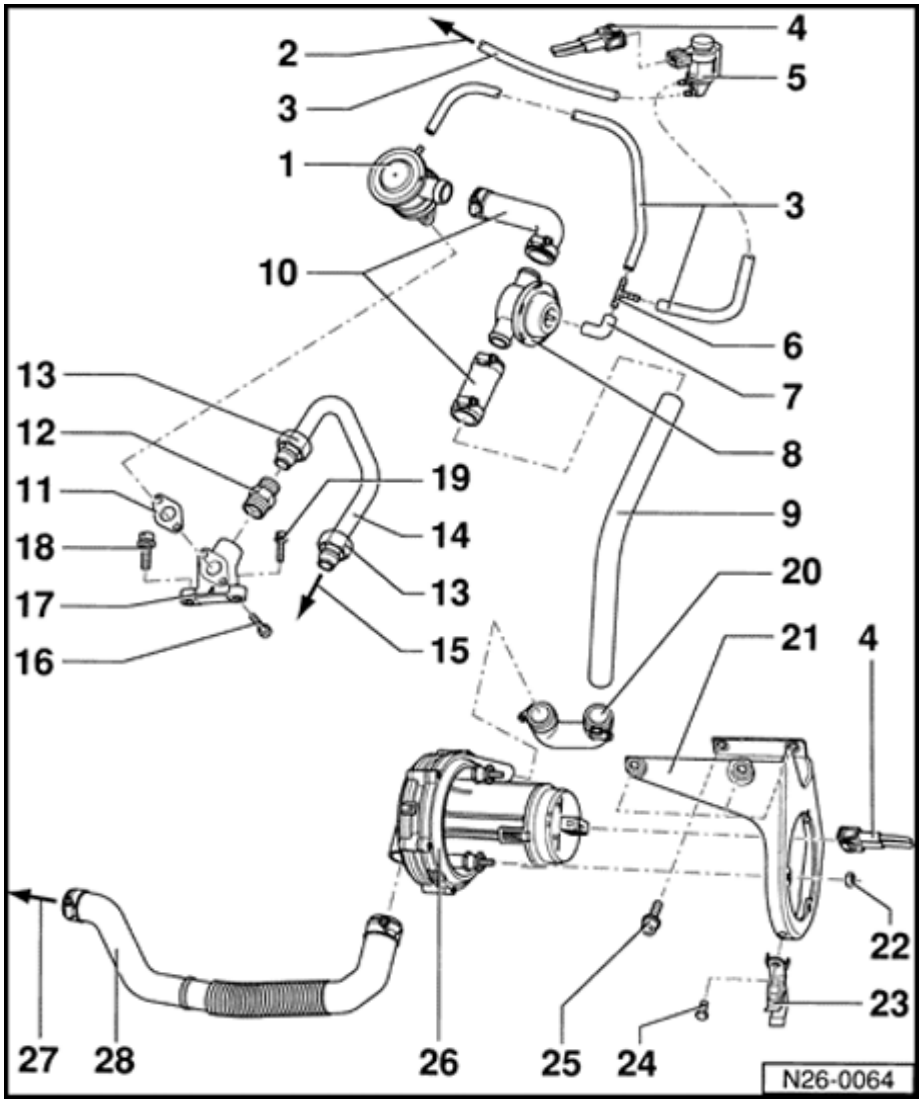

5 - Secondary Air Injection (AIR) solenoid valve - N112-**

- Checking ⇒ Page 26-29

6 - T-connector

7 - Vacuum hose

8 - Check valve

9 - Pressure hose

- Connection should be tight and free of leaks

10 - Pressure hose

- Connection should be tight and free of leaks

11 - Gasket

- Always replace

12 - Union

13 - 30 Nm (22 ft lb)

14 - Air injection

line

15 - To fitting on exhaust manifold

- ⇒ Page 26-3 , item 19

16 - 10 Nm (7 ft lb)

26-19

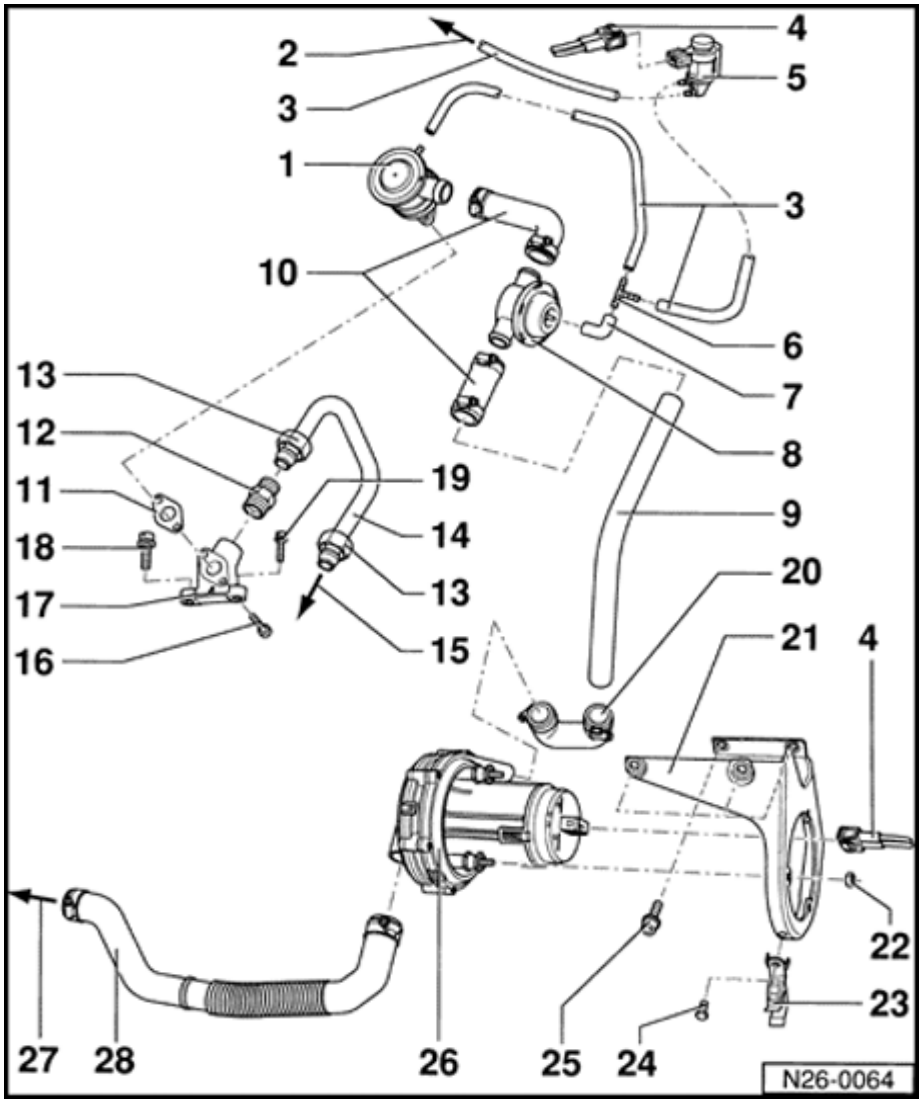

17 - Bracket

- For combi-valve

18 - 25 Nm (18 ft lb)

19 - 10 Nm (7 ft lb)

20 - Pressure hose

- Connection should be tight and free of leaks

21 - Bracket

- For secondary air injection pump motor - 26 -

22 - 10 Nm (7 ft lb)

23 - Bracket

- For A/C hose

24 - 10 Nm (7 ft lb)

25 - 25 Nm (18 ft lb)

26 - Secondary Air Injection (AIR) pump motor -

V101-**

- Checking ⇒ Page 26-24

27 - To Air Cleaner (ACL)

28 - Intake air hose

- For secondary air injection pump motor - 26 -

26-20

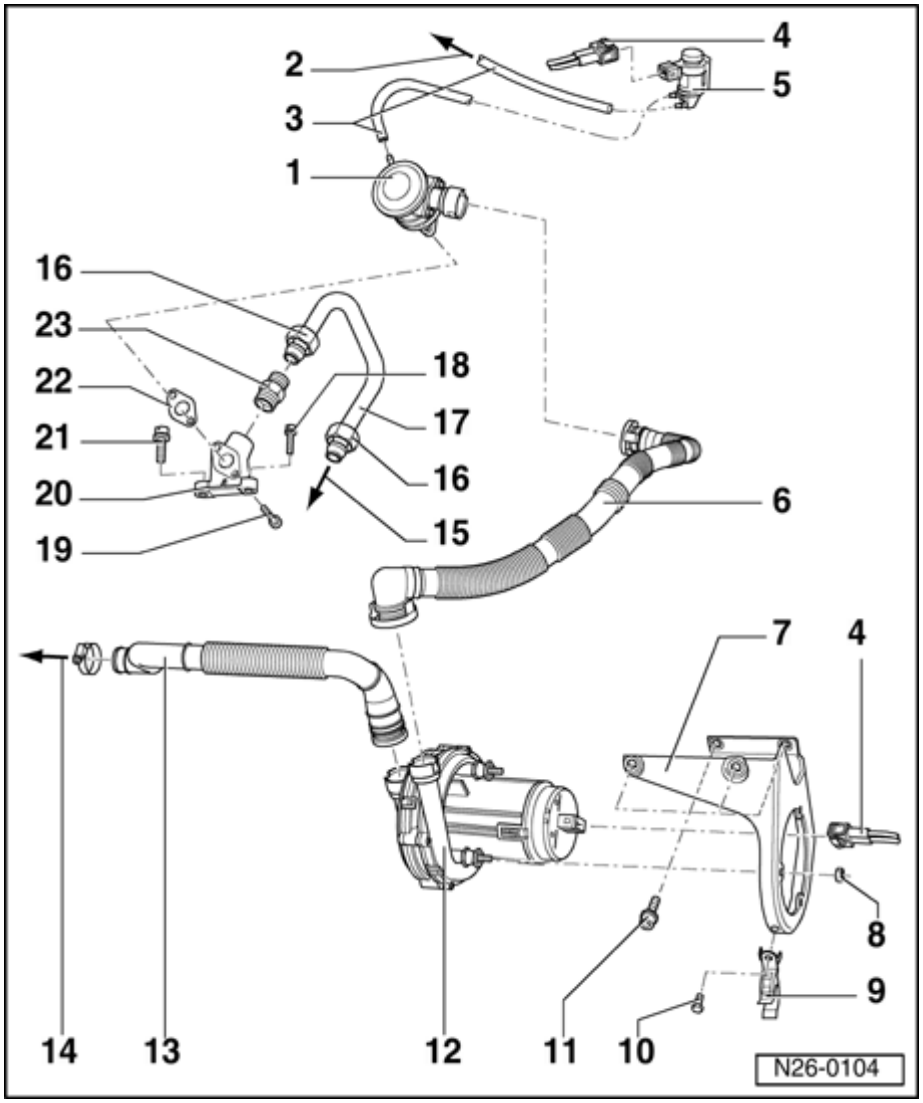

Vehicles from 08.95

Note:

The complete system is checked by the On Board Diagnostic program.

⇒ *Repair Manual, 2.0 Liter 4-Cyl. 2V Fuel Injection & Ignition, Engine Code(s): ABA m.y. 1995, Repair Group 01*

⇒ *Repair Manual, 2.0 Liter 4-Cyl. 2V Fuel Injection & Ignition, Engine Code(s): ABA m.y. 1996-1997, Repair Group 01*

1 - Combi-valve

- Checking ⇒ Page 26-23

2 - To connection on hose to vacuum brake booster

3 - Vacuum hose

4 - Harness connector

- 2-pin

5 - Secondary Air Injection (AIR) solenoid valve - N112-

- Checking ⇒ Page 26-23

6 - Pressure hose

- Connection should be tight and free of leaks

26-21

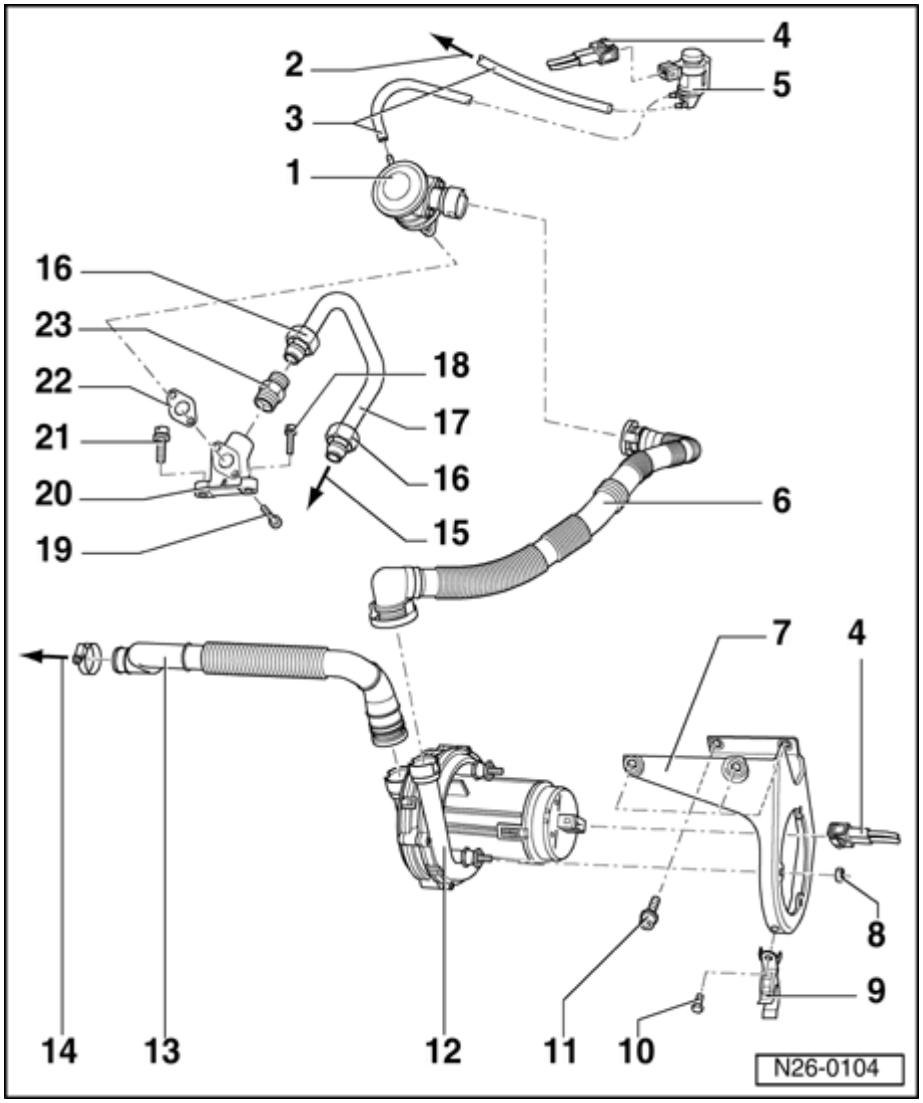

7 - Bracket

- For secondary air injection pump motor - 12 -

8 - 10 Nm (7 ft lb)

9 - Bracket

- For A/C hose

10 - 10 Nm (7 ft lb)

11 - 25 Nm (18 ft lb)

12 - Secondary Air Injection (AIR) pump motor - V101-

- Checking ⇒ Page 26-24

13 - Intake air hose

- For secondary air injection pump motor - 13 -

14 - To Air Cleaner (ACL)

15 - To fitting on exhaust manifold

- ⇒ Page 26-5 , item 14

16 - 30 Nm (22 ft lb)

17 - Air injection line

18 - 10 Nm (7 ft lb)

26-22

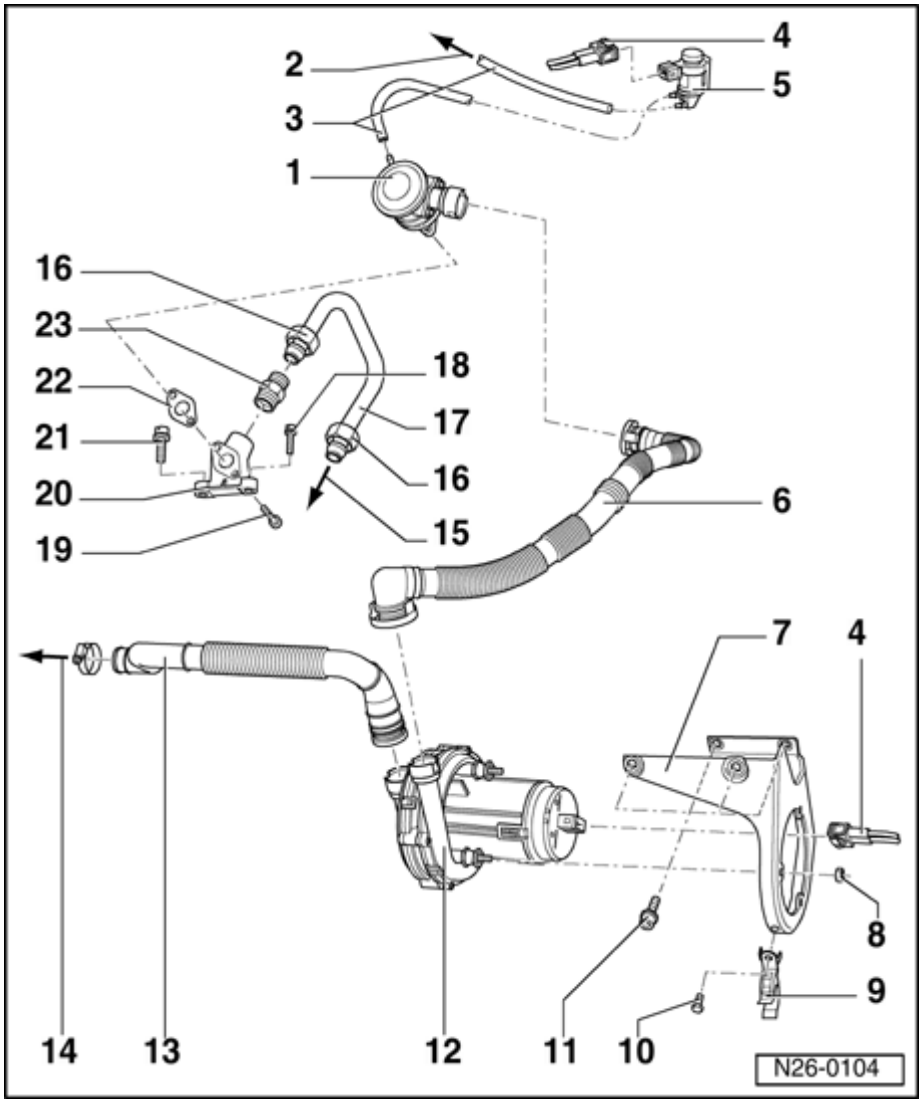

19 - 10 Nm (7 ft lb)

20 - Bracket

- For combi-valve

21 - 25 Nm (18 ft lb)

22 - Gasket

- Always replace

23 - Union

26-23

Combi-valve and check valve, checking

Special tools, testers and auxiliary items

- US 8026 hand vacuum pump

Test sequence

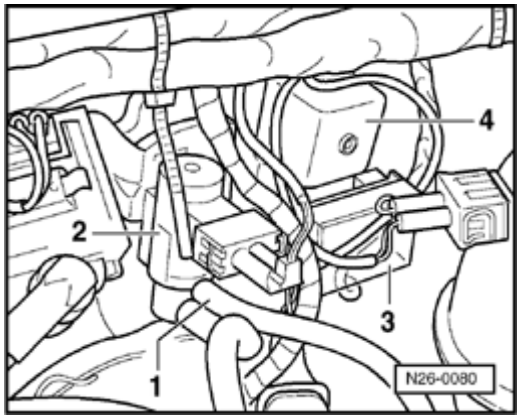

- Disconnect vacuum hose -1- from secondary air injection solenoid valve -2-.
- Connect US 8026 hand vacuum pump to vacuum hose -1-.
- Disconnect pressure hose (arrow) from combi-valve.

WARNING!

Do not use compressed air during the following check!

- Connect auxiliary hose to combi-valve and blow into it.
  - Valve must be closed.
- Operate hand vacuum pump.
  - Combi-valve must open. Valve operation should be smooth (without sticking)
- Replace combi-valve, if necessary.

26-24

Secondary Air Injection (AIR) pump motor, checking

Special tools, testers and auxiliary items

- VAG 1598/18 test box
- VW 1594 connector test kit
- VAG 1527B voltage tester

Test conditions

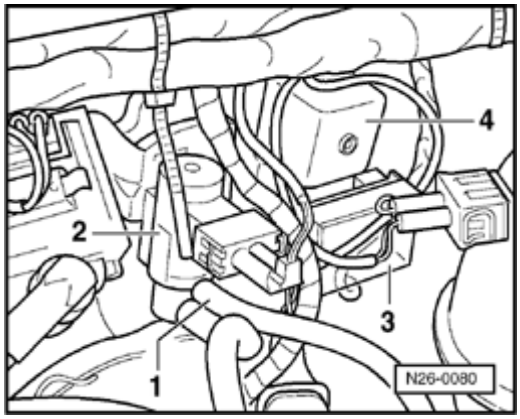

- Fuse -3- on secondary air injection pump relay J299 -4- OK

Test sequence

- Vehicles up to 07.95 ⇒ Page 26-25
- Vehicles from 08.95 ⇒ Page 26-27

26-25

Vehicles up to 07.95

- Switch ignition off.

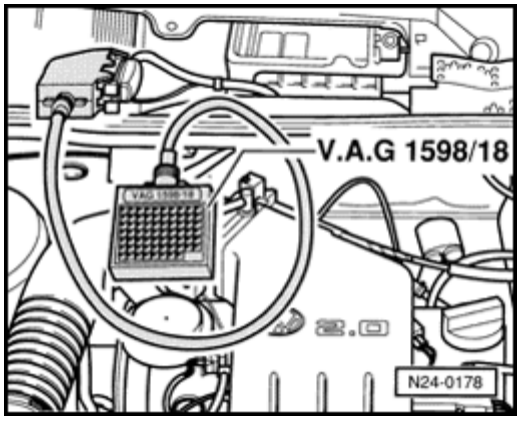

- Connect VAG 1598/18 test box to ECM wiring harness.

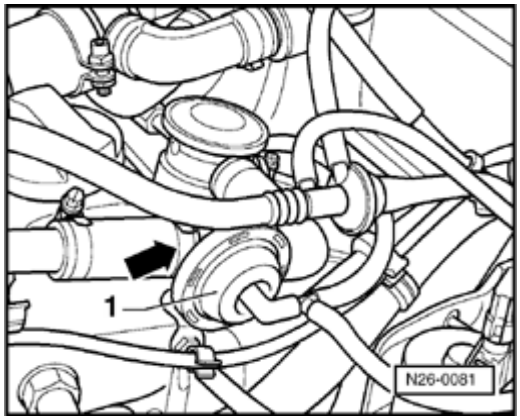

- Disconnect pressure hose from check valve -1-.
- Switch ignition on.
- Connect test box sockets 1 and 50 using adapter cables from VW 1594 connector test kit.
  - Secondary air injection pump motor must run and air must exit the connecting hose.

If the motor runs, but no air exits the hose:

- Check hoses and lines.
- If necessary, replace secondary air injection pump motor.

26-26

If the motor does not run:

- Disconnect 2-pin connector from secondary air injection pump motor V101.

- Connect VAG 1527B voltage tester to 2-pin connector using adapter cables from VAG 1594 test kit.

  - LED must light up

If YES (voltage supply OK):

- Replace secondary air injection pump motor.

If LED does not light up:

- Reconnect 2-pin connector.

- Check activation of secondary air injection pump motor.

⇒ *Repair Manual, 2.0 Liter 4-Cyl. 2V Fuel Injection & Ignition, Engine Code(s): ABA m.y. 1995, Repair Group 01*

- Check Diagnostic Trouble Code (DTC) memory for stored malfunctions.

⇒ *Repair Manual, 2.0 Liter 4-Cyl. 2V Fuel Injection & Ignition, Engine Code(s): ABA m.y. 1995, Repair Group 01*

26-27

Vehicles from 08.95

- Switch ignition off.

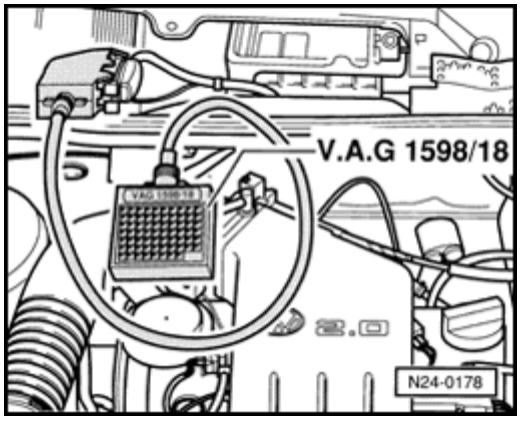

- Connect VAG 1598/18 test box to ECM wiring harness.
- Disconnect pressure hose from combi-valve -1-.
- Switch ignition on.
- Bridge test box sockets 1 and 06 using adapter cables from VW 1594 connector test kit.
- Bridge test box socket 49 and Ground (GND) using adapter cables from VW 1594 connector test kit.

• Secondary air injection pump motor must run and air must exit the connecting hose.

If the motor runs, but no air exits the hose:

- Check hoses and lines.
- If necessary, replace secondary air injection pump motor.

If the motor does not run:

- Disconnect 2-pin connector from secondary air injection pump motor V101.
- Connect VAG 1527B voltage tester to 2-pin connector using adapter cables from VAG 1594 test kit.

26-28

- LED must light up

If YES (voltage supply OK):

- Replace secondary air injection pump motor.

If LED does NOT light up:

- Check wiring between test box socket 49 and secondary air injection pump relay using wiring diagram.

- Check activation of relay and wiring to secondary air injection pump motor using wiring diagram.

⇒ *Repair Manual, 2.0 Liter 4-Cyl. 2V Fuel Injection & Ignition, Engine Code(s): ABA m.y. 1995, Repair Group 01*

⇒ *Repair Manual, 2.0 Liter 4-Cyl. 2V Fuel Injection & Ignition, Engine Code(s): ABA m.y. 1996-1997, Repair Group 01*

- Reconnect 2-pin connector.

- Check Diagnostic Trouble Code (DTC) memory for stored malfunctions and erase.

⇒ *Repair Manual, 2.0 Liter 4-Cyl. 2V Fuel Injection & Ignition, Engine Code(s): ABA m.y. 1995, Repair Group 01*

⇒ *Repair Manual, 2.0 Liter 4-Cyl. 2V Fuel Injection & Ignition, Engine Code(s): ABA m.y.*

1996-1997, Repair Group 01

26-29

Secondary Air Injection (AIR) solenoid valve, checking

Vehicles up to 07.95

Special tools, testers and auxiliary items

- VW 1594 connector test kit
- VAG 1527 voltage tester

Test conditions

- Engine oil temperature 15-35 °C (59-95 °F)
- Secondary air injection pump motor OK.

Test sequence

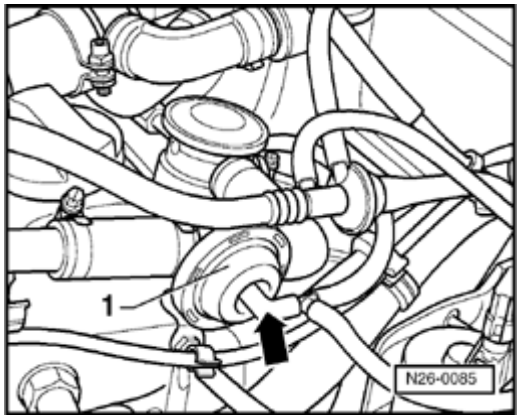

- Disconnect vacuum hose (arrow) from check valve -1-.
- Start engine and run at idle.
  - When the secondary air injection pump motor runs, intake manifold vacuum must be present at vacuum hose.

If no intake manifold vacuum is present:

- Stop engine (switch ignition off).
- Disconnect 2-pin connector from secondary air injection solenoid valve.

26-30

- Connect VAG 1527B voltage tester to 2-pin connector using adapter cables from VW 15
connector test kit.

- Start engine and run at idle.

• LED must light-up

If YES (voltage supply OK):

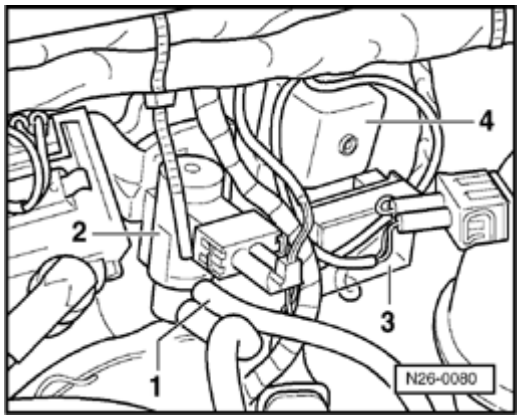

- Replace secondary air injection solenoid val
2-.

If LED does not light up:

- Reconnect 2-pin connector.
- Check activation of secondary air injection p
motor.

⇒ *Repair Manual, 2.0 Liter 4-Cyl. 2V Fuel Inje*
& Ignition, Engine Code(s): ABA m.y. 1995, Re
Group 01

- Check Diagnostic Trouble Code (DTC) mem
for stored malfunctions.

⇒ *Repair Manual, 2.0 Liter 4-Cyl. 2V Fuel Inje*
& Ignition, Engine Code(s): ABA m.y. 1995, Re
Group 01

26-31

Vehicles from 08.95

Special tools, testers and auxiliary items

- VW 1594 connector test kit
- VAG 1527 voltage tester
- US 8026 Hand vacuum pump

Test conditions

- Vacuum hoses OK

Test sequence

- Disconnect vacuum hose to secondary air injection solenoid valve at vacuum line to bra servo, item - 2 - ⇒ Page 26-20 .
- Connect hand vacuum pump US 8026 to vacuum line.
- Disconnect combi-valve vacuum line at valve item - 1 - ⇒ Page 26-20 .
- Switch ignition off.

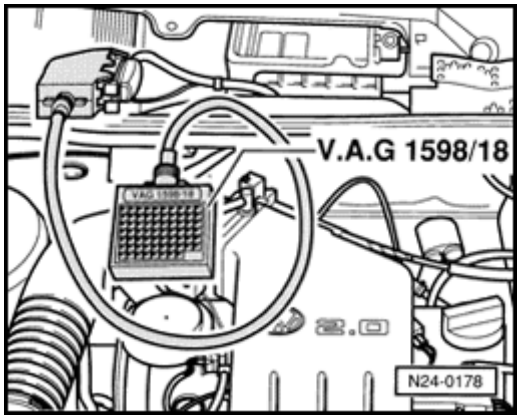

- Connect VAG 1598/18 test box to ECM wirir harness.
- Switch ignition on.
- Bridge test box sockets 1 and 06 using adap cables from VW 1594 connector test kit.
- Operate hand vacuum pump.

26-32

- Vacuum must build up (valve closed)

If vacuum builds up:

- Disconnect 2-pin connector from solenoid valve.

- Connect VAG 1527B voltage tester to 2-pin harness connector using adapter cables fron VW 1594 connector test kit.

- LED must light-up

If YES (voltage supply OK):

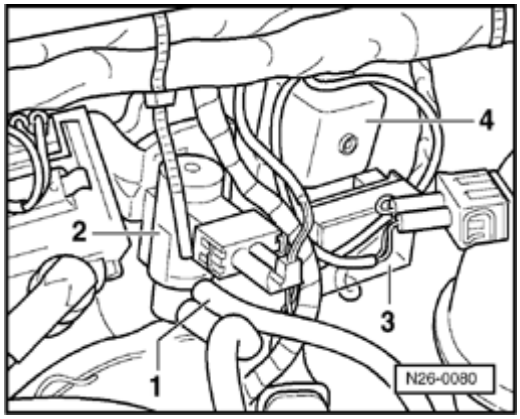

- Replace secondary air injection solenoid val

If LED does not light up:

- Check wiring between test box socket 50 an terminal 2 of 2-pin harness connector for ope circuit using wiring diagram.

  Resistance: 1.5 Ω maximum

- Check wiring between central electric panel solenoid valve harness connector, terminal 1 using wiring diagram.
- Reconnect 2-pin connector.
- Check Diagnostic Trouble Code (DTC) mem for stored malfunctions and erase.

⇒ *Repair Manual, 2.0 Liter 4-Cyl. 2V Fuel Injec & Ignition, Engine Code(s): ABA m.y. 1995, Re Group 01*

⇒ *Repair Manual, 2.0 Liter 4-Cyl. 2V Fuel Injec & Ignition, Engine Code(s): ABA m.y. 1996-19 Repair Group 01*

Volkswagen Passat

Official Factory Repair Manual

1995
Gasoline, Turbo Diesel, TDI
4-cylinder and VR6, including wagon

Robert Bentley

PASSAT '95 - '97

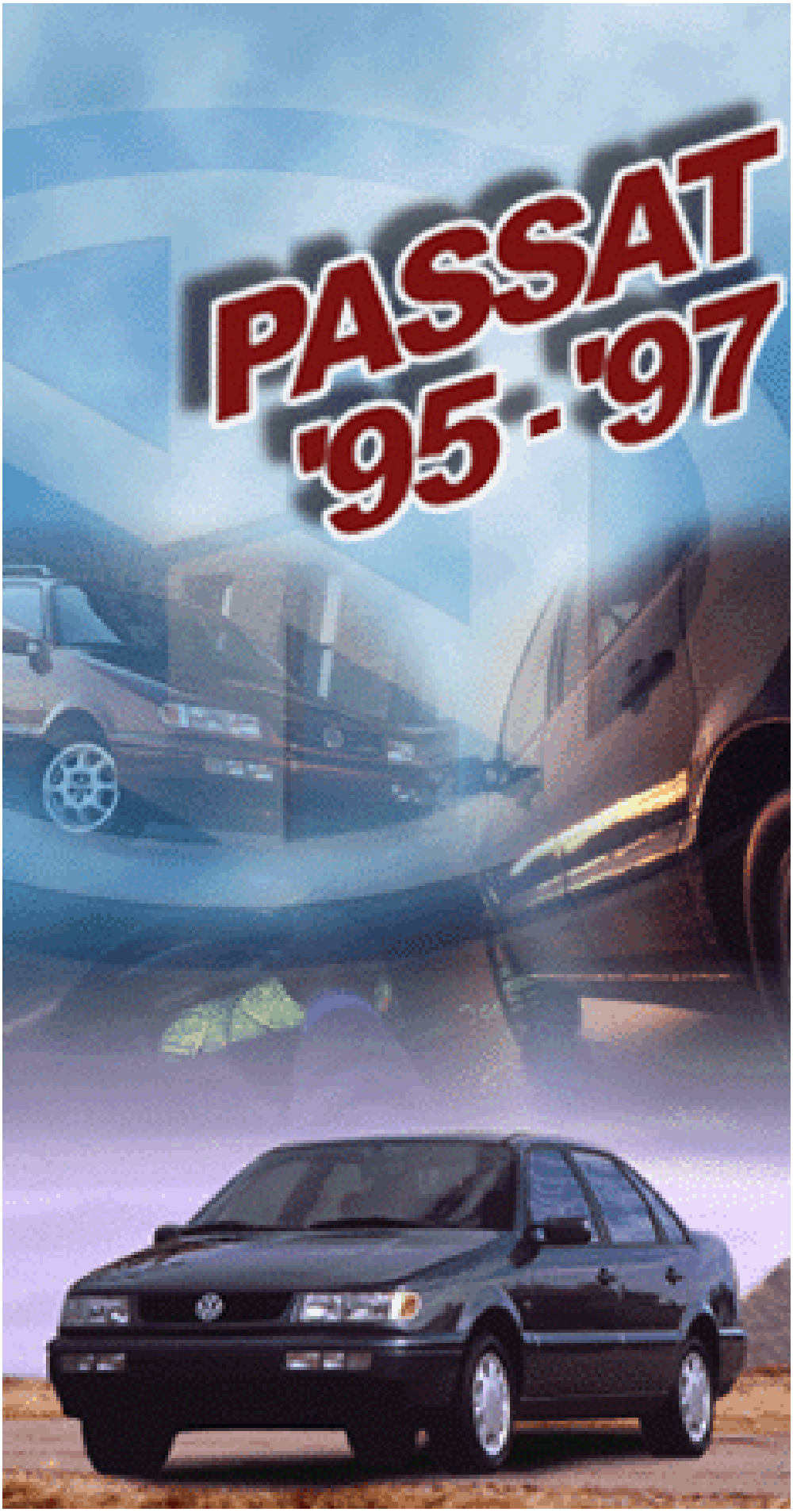

2.8 Liter VR6 2V Engine Mechanical, Engine Code(s): AAA

00 - General, Technical data

Technical data
Engine number
Engine data

10 - Engine - Assembly

Engine, removing and installing
Vehicles with A/C
Vehicles with manual transmission
Vehicles with automatic transmission
All vehicles:
Installation notes
Tightening torques
Engine/transmission mounts
Engine and transmission, aligning
Rubber engine mount, replacing
A/C components, removing

13 - Engine - Crankshaft, Cylinder block

Engine, disassembly and assembly
Part I
Part II
Part III
Ribbed belt, removing and installing
Valve timing, checking
Valve timing, adjusting
Flywheel sealing flange and drive plate, removing and installing
Crankshaft oil seal - vibration damper end, replacing
Drive plate, removing and installing
Crankshaft, removing and installing
Pistons and connecting rods, disassembling and assembling
Piston and cylinder dimensions

15 - Engine - Cylinder head, Valvetrain

Cylinder head, removing and installing
Cylinder head cover, removing and installing
Cylinder head, installing

Compression testing

Valve train, servicing
Valve seats, reworking
Camshafts, removing and installing
Hydraulic lifters, checking
Valve guides, checking
Valve guides, replacing
Valve stem seals, replacing

17 - Engine - Lubrication

Lubrication system, component removal and installation

Oil filter housing, disassembling and assembling
Oil pump, disassembling and assembling
Oil pressure and oil pressure switch, checking

19 - Engine - Cooling system

Cooling system, component removal and installation
Cooling system component layout (body side)
Cooling system, component layout (engine side)
Coolant thermostat housing, disassembling and assembling
Cooling system, draining and filling

Radiator and radiator fan, removing and installing
Coolant pump, removing and installing
Coolant after-run system, checking

20 - Fuel Supply

Fuel supply system components, removing and installing
Fuel tank assembly and fuel filter, removing and installing
Safety precautions when working on the fuel supply system
Rules for cleanliness
Throttle cable, adjusting
Fuel pump assembly, removing and installing
Fuel pumps, checking
EVAP system components, removing and installing
Fuel tank ventilation, checking

26 - Exhaust system, Emission controls

Exhaust system components, removing and installing
Exhaust manifold, front exhaust pipe and three-way catalyst assembly, component layout
Muffler system and mountings, component layout

Exhaust gas recirculation system
Exhaust Gas Recirculation (EGR) valve, checking

Secondary Air Injection system, function
Secondary Air Injection system components, removing and installing
Combi-valve, checking
Secondary Air Injection pump motor, checking
Secondary Air Injection solenoid valve, checking
Combi-valve and Secondary Air Injection pump motor, removing and installing

00-1

Technical data

Engine number

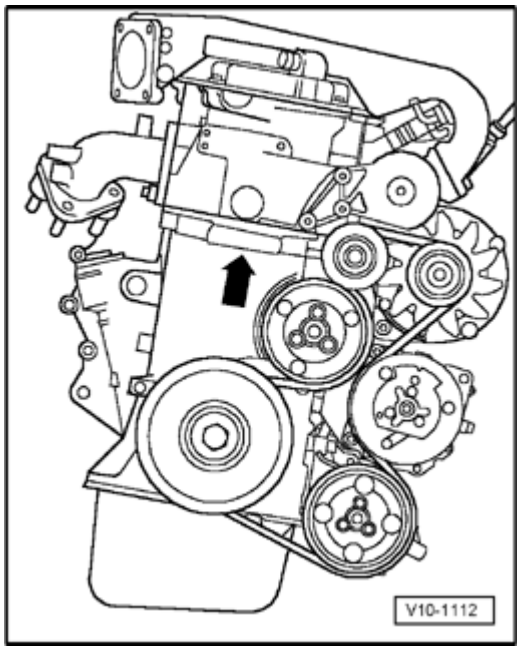

The engine number ("Code letters" and "Serial number") can be found on the vibration damper end of the cylinder block.

There is also a sticker on the cylinder head cover that shows the "Engine code" and "Serial number".

The engine code is also inscribed on the vehicle data plate.

Cylinder numbering

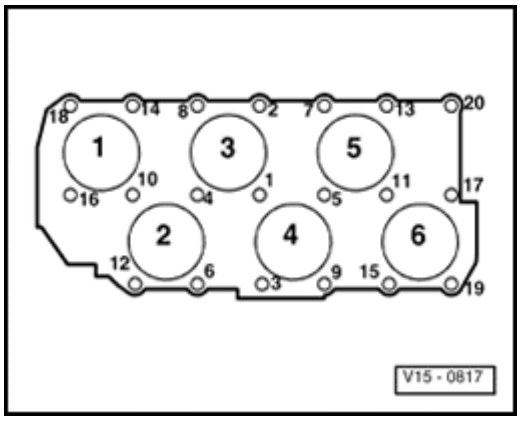

Cylinder number 1 is located at the right-rear of the engine block. Cylinders 2, 4 and 6 are on the front of the engine block, toward the front of the vehicle.

00-2

Engine data

Engine code		**AAA**
Manufactured		10.93 ➢
Arrangement of cylinders		VR[1)]
Cylinder angle		15 °
Displacement	ltrs.	2.8
Output	kW at rpm	128/5800
Torque	Nm at rpm	235/4200
		(240/4200)[2)]
Bore	diameters mm	81
Stroke	mm	90.3
Compression ratio		10.0 : 1

[1)] VR = V-arrangement in compact in-line design

[2)] Note: The design of this engine management system, with selective knock control, permits the full use of high octane fuel. The figures given in brackets will be attained when using Super plus RON 98.

00-3

Engine code		**AAA**
RON	minimum	95 unleaded
Injection system		Motronic
Ignition system		Motronic
Firing order		1-5-3-6-2-4
Knock control		Yes
On Board Diagnostic		Yes
Oxygen sensor control		Yes
Three-way Catalyst		Yes

10-1

Engine, removing and installing

Removing:

- Remove the engine in a forward direction (together with the transmission)

- Switch off the ignition and disconnect the ba ground wire.

Note:

First obtain the radio anti-theft code from the customer before disconnecting the battery.

- All tie wraps which are opened or cut to rem the engine, must be replaced in the same position and location when installing the eng

- Removing ribbed belt, see ⇒ Page 13-20 .

- Remove intake hose

- Remove spark plug connectors with ignition wires

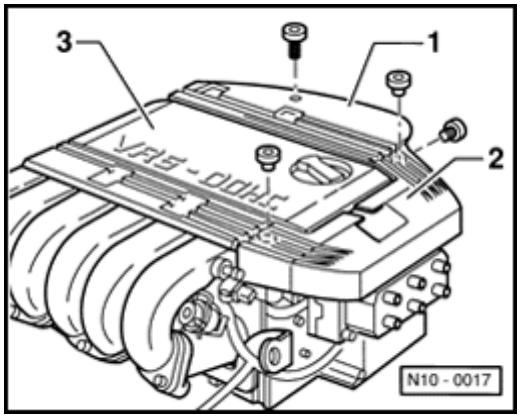

- Remove ignition wire guides -1- and -2-.
- Remove cover for intake manifold upper sec -3-.

- Disconnect accelerator cable at throttle valve housing and support bracket (do not remove locating clip at support bracket).

- Loosen power steering reservoir hose clamp.

- Unbolt power steering hydraulic line retainers from engine mount and transmission.

- Remove power steering pump and lay to side; hoses remain connected.

⇒ *Repair Manual, Body Exterior, Interior, Repair Group 50; Remove lock carrier with attachments*

- Drain coolant, see ⇒ Page 19-13

- Disconnect 42-pin connector (near ignition coil).

- Disconnect all wiring from transmission, generator and starter and move clear.

- Disconnect all coolant, vacuum and breather hoses from engine.

- Disconnect fuel supply and return lines from fuel rail and unclip from retainers on cylinder head cover.

10-3

Note:

For protection against fuel spray cover connections with a cloth.

- Separate 4-pin connector to Oxygen sensor and 2-pin connector to knock sensor 1 on rear right assembly mounting.

- Unbolt drive shafts and tie up.

- Remove balance weight and front exhaust pipe from exhaust manifold, ⇒ Page 26-2 .

- Disconnect vacuum hose between intake manifold upper section and fuel pressure regulator.

- Remove intake manifold absolute pressure sensor from intake manifold upper section.

- Remove radiator with fan and air ducting, see ⇒ Page 19-2

Vehicles with A/C

- Additional information and removal instructions on ⇒ Page 10-16 .

10-5

Vehicles with manual transmission

⇒ *Repair Manual, 5 Spd. Manual Transmission 02A, Repair Group 30 Remove hydraulic clutch slave cylinder*

⇒ *Repair Manual, 5 Spd. Manual Transmission 02A, Repair Group 34; Remove transmission operating cables with support bracket from transmission*

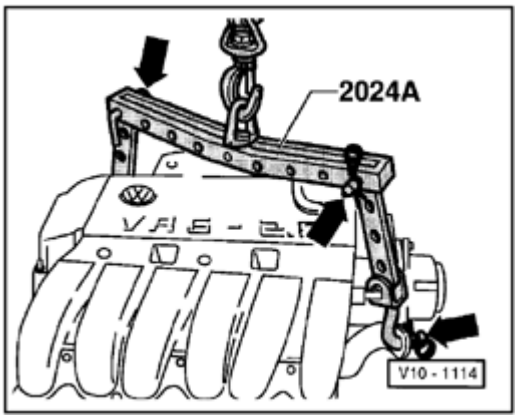

- Attach lifting tackle 2024 A as follows and lift engine and trans assembly slightly using workshop crane:

  Vibration damper end: 4th hole in hook at position 1

  Flywheel end: 4th hole in hook at position 6

WARNING!

Hooks and locating pins must be secured with locking pins.

Notes:

- *The positions marked 1 through 4 on the bar must be toward the vibration damper.*
- *The holes in the hooks are counted up from the hook.*

10-6

Vehicles with automatic transmission

⇒ *Repair Manual, Automatic Transmission, Repair Group 37; Remove selector lever cable from transmission*

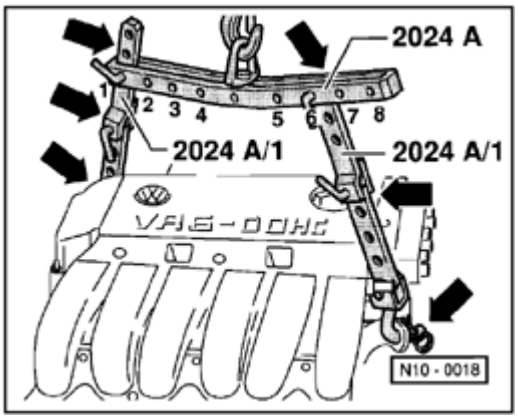

- Attach lifting tackle 2024A with extension 2024 All as follows and lift power train slightly using workshop crane:

  Vibration damper end:

  1st hole in extension at position 1

  Flywheel end:

  3rd hole in extension at position 6

CAUTION!

The hooks and locating pins must be secured with locking pins.

Notes:

- *The positions marked 1...4 on the bar must be toward the vibration damper end of the engine.*
- *The holes in the hooks are counted up from the hook.*

10-7

All vehicles:

- Release transmission from left-rear assembl mounting and engine from right-rear assemb mounting.

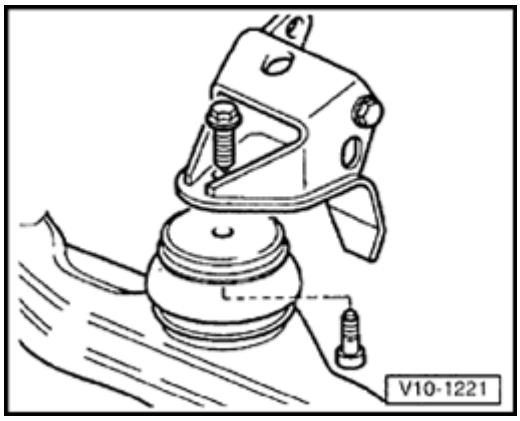

- Release engine at front assembly mounting.

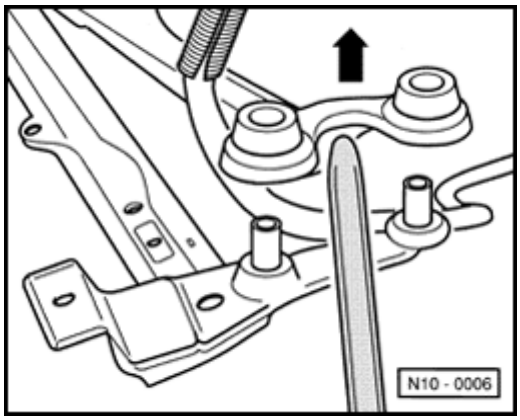

- Disconnect engine carrier on one side pry th spacer bracket out of the rubber mountings.
- Disconnect power steering hydraulic lines ar take out of engine carrier.
- Pry out assembly forward.

Note:

When lifting out, carefully guide the assembly, prevent damage to the bodywork.

When working on the engine, the engine shoul secured to the engine stand using the engine bracket 3269.

Installation notes

Installation is the reverse of the removal sequence. Note the following points during installation:

Vehicles with manual transmission

- Check clutch release bearing for wear, repla necessary.

- Lightly grease clutch release bearing, releas bearing guide sleeve and splines on input sh with G 000 100.

All vehicles

- Check whether the alignment dowels for centering engine and transmission are instal in the engine block, install if necessary.

- Lower the engine trans assembly, make sure that clearance exists between assembly and drive shafts.

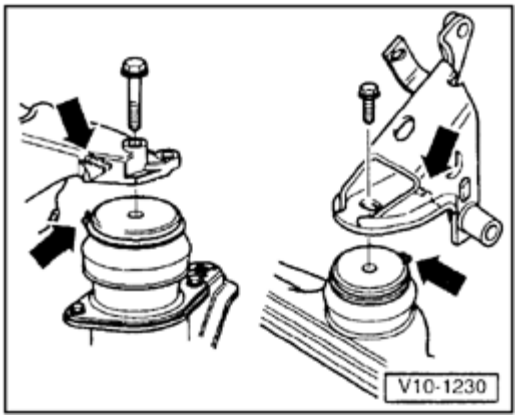

- Install the rear right and front assembly mou make sure that the recess on the rear conso and the recess on the front console locates c the lugs of the bonded rubber mounting - arro .
- Insert all assembly mounting bolts by hand approx. 5...6 turns.
- Align the engine and trans mounts and relie any stress by rocking the assembly.
- First tighten front and rear right assembly mounts, then tighten rear left assembly mou Tightening torques, ⇒ Page 10-11 .

Vehicles with manual transmission

⇒ *Repair Manual, 5 Spd. Manual Transmission 02A, Repair Group 30; Install hydraulic clutch slave cylinder*

⇒ *Repair Manual, 5 Spd. Manual Transmission 02A, Repair Group 34; Install selector cables with support bracket on transmission, adjust if necessary*

Vehicles with automatic transmission

⇒ *Repair Manual, Automatic Transmission, Repair Group 37; Install selector cable on transmission, adjust if necessary*

Vehicles with A/C

⇒ *Repair Manual, Heating & Air Conditioning, Repair Group 87; Installing A/C compressor*

All vehicles

⇒ *Repair Manual, Suspension, Wheels, Brakes, Steering, Repair Group 48; Installing power steering pump*

⇒ *Repair Manual, Body Exterior, Interior, Repair Group 50; Install lock carrier with attachments*

⇒ *Repair Manual, Electrical Equipment, Repair Group 97; Electrical connections and routing*

⇒ *Repair Manual, 2.8 Liter VR6 2V Fuel Injection & Ignition, Engine Code(s): AAA m.y. 1995, Repair Group 24; Install intake hose*

- Install ribbed belt, see ⇒ Page 13-20 .

- Filling with coolant, see ⇒ Page 19-3

- Adjusting throttle cable, see ⇒ Page 20-11

⇒ *Repair Manual, 2.8 Liter VR6 2V Fuel Injection & Ignition, Engine Code(s): AAA m.y. 1995, Repair Group 24; Check idle speed and ignition timing*

- Check headlight alignment and adjust if necessary

10-11

Tightening torques

Component		Tightening torque
Engine to transmission	M10	60 Nm (44 ft lb)
	M12	80 Nm (59 ft lb)
Drive shafts to flanged shafts		45 Nm (33 ft lb)
Front exhaust pipe to exhaust manifold		40 Nm (30 ft lb)
Front exhaust pipe to three-way catalyst		25 Nm (18 ft lb)
Engine mount to body		80 Nm (59 ft lb)

10-12

Engine/transmission mounts

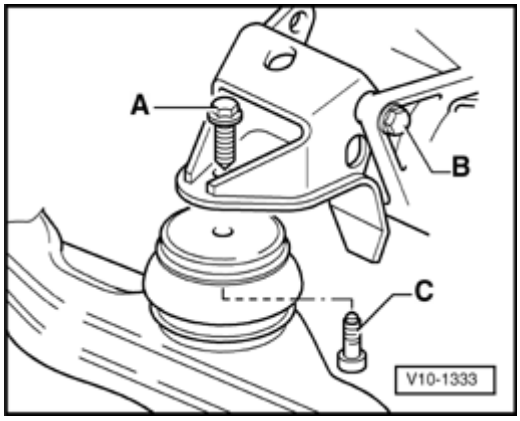

Tightening torques(with threads lubricated)

Front engine transmission mounts

A = 60 Nm (44 ft lb)

B = 60 Nm (44 ft lb)

C = 55 Nm (41 ft lb)

10-13

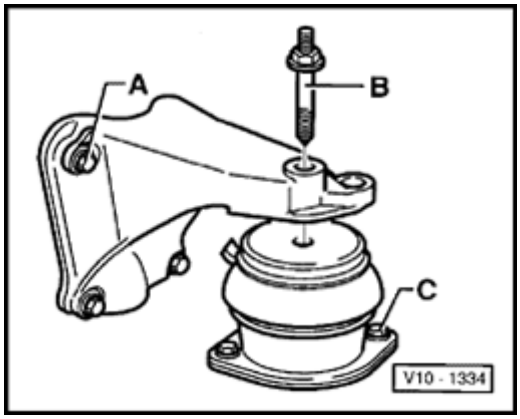

- Right rear engine/transmission mount

  A = 60 Nm (44 ft lb)

  B = 60 Nm (44 ft lb)

  C = 25 Nm (18 ft lb)

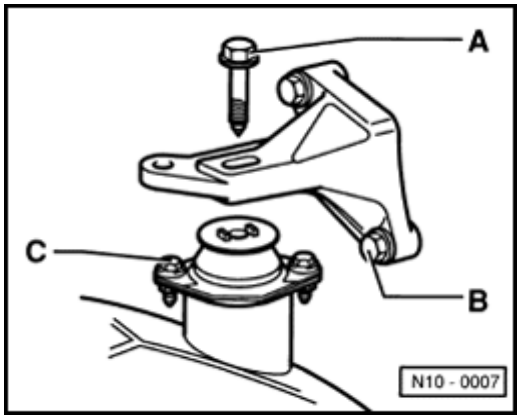

- Left rear engine/transmission mount

  A = 60 Nm (44 ft lb)

  B = 25 Nm (44 ft lb)

  C = 25 Nm (18 ft lb)

Engine and transmission, aligning

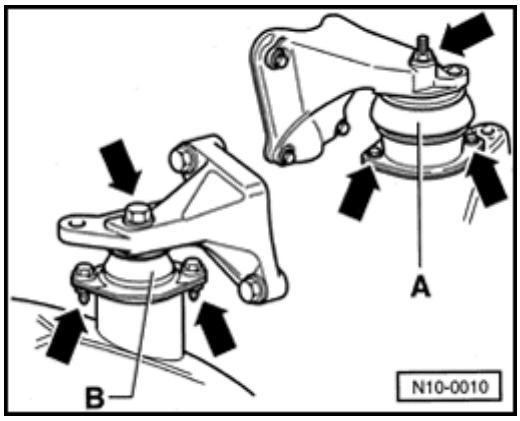

Aligning is only necessary when the engine and transmission have been removed and if the rubber mounts have been loosened at the engine and trans mount and engine mount.

- Loosen right-rear engine and trans mount -A- at engine and sub-frame.
- Loosen left-rear engine and trans mount -B- at transmission and sub-frame.

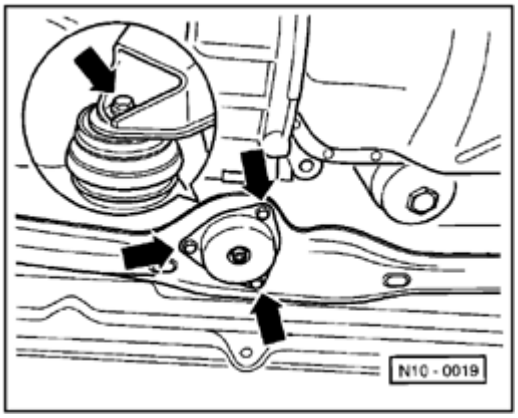

- Loosen front engine and trans mount at engine mount and console.
- Relieve any stress by rocking the engine and transmission assembly on their mounts.
- First tighten front and right-rear engine and trans mounts, then left-rear engine and trans mount. Tightening torques, ⇒ Page 10-11 .

10-15

Rubber engine mount, replacing

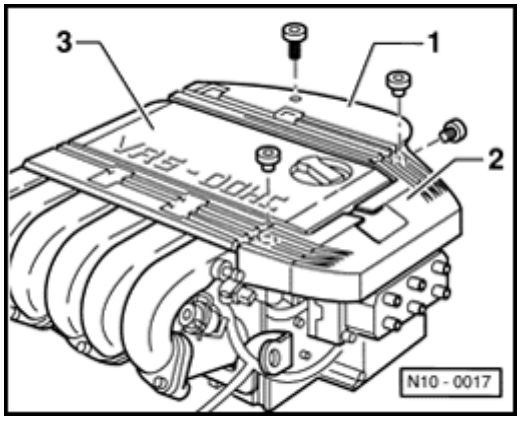

- Disconnect high tension wires from ignition coil and unclip wire from wire guide -2-.
- Remove high tension wire guide -2-.
- Pull off vacuum hose between intake manifold upper section and fuel pressure regulator.
- Remove Intake Air Temperature sensor from intake manifold upper section.
- Assemble engine support bracket 10-222A with legs 10-222A/1.

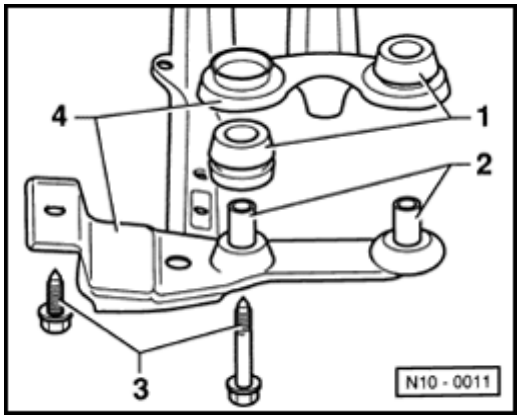

- Locate support bracket in lifting eye on left side of cylinder head and take-up weight of engine.
- Remove engine mount.
- Pry spacer -2- out of rubber mount -1- with a lever.
- Press out rubber mount -1-.

Note:

Observe the installed position of rubber mount -1-.

- Install new rubber mount -1-. Press engine mount spacer -2 into rubber mount -1-.
- Install engine mount -4- and tighten mounting bolts -3- to 80 Nm (59 ft lb).

10-16

A/C components, removing

CAUTION!

The A/C refrigerant circuit must not be opened.

Note:

Only open up the A/C refrigerant circuit in workshops, having trained personnel and the necessary range of tools and equipment to complete the work.

To facilitate removing and installing the engine without opening the A/C refrigerant circuit:

- Unbolt A/C fluid reservoir and allow to hang free.

- Remove retaining clamp(s) from refrigerant lines.

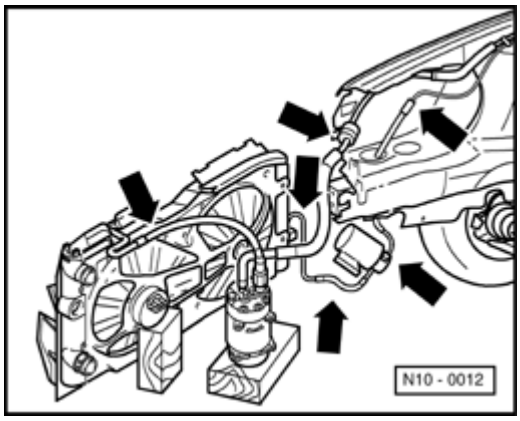

- Remove ribbed belt, see ⇒ Page 13-20 .

⇒ *Repair Manual, Body Exterior, Interior, Repa Group 50; Remove lock carrier with attachmen*

- , see .

⇒ *Repair Manual, Heating & Air Conditioning, Repair Group 87; Remove A/C compressor*

- Remove A/C compressor with radiator and condenser and lay to one side so that the refrigerant hoses -arrows- are not stressed.

13-1

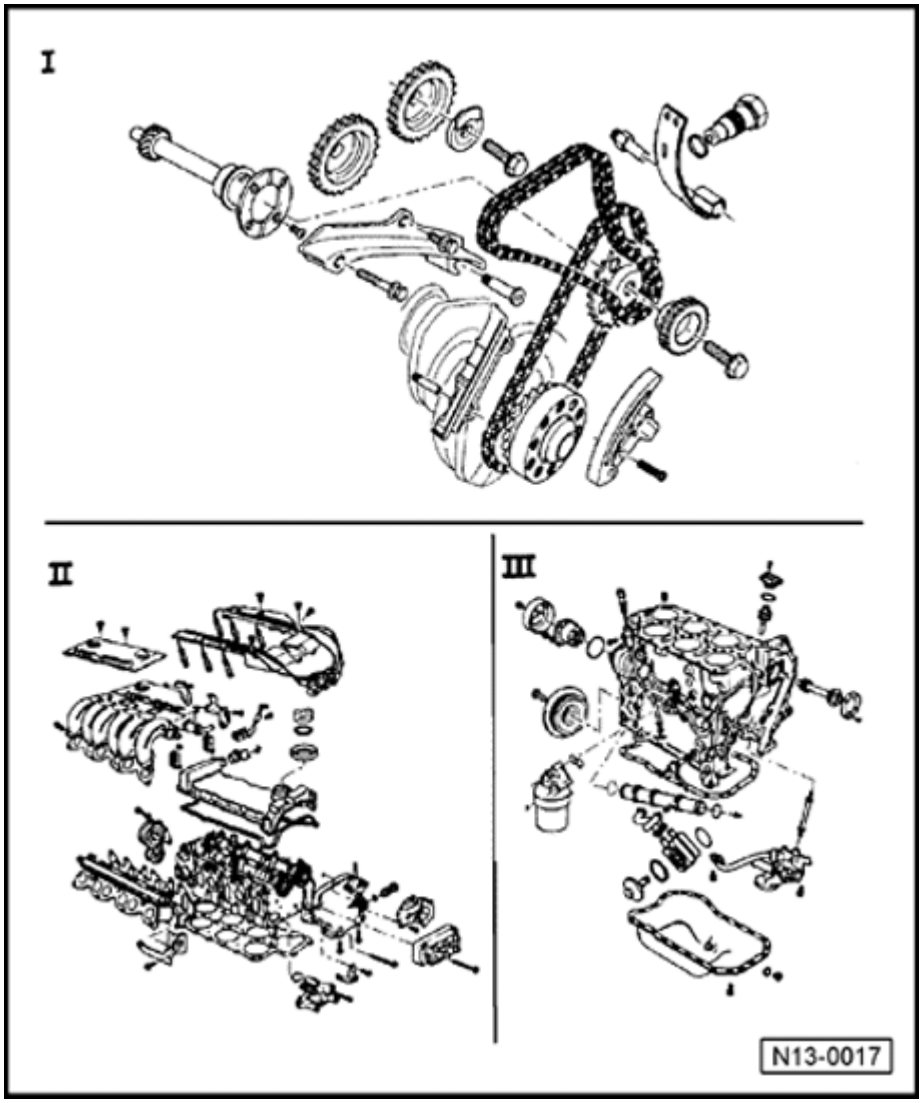

Engine, disassembly and assembly

Note:

When repairing an engine, metal shavings or large quantities of small metal particles are found in engine oil; (for example, caused by partial seizure of crankshaft and connecting rod bearings) to prevent damage it is necessary to replace all oil spray jets, the oil pump check valve and oil cooler, in addition to cleaning the oil passages.

I ⇒ Page 13-2

II ⇒ Page 13-8

III ⇒ Page 13-14

13-2

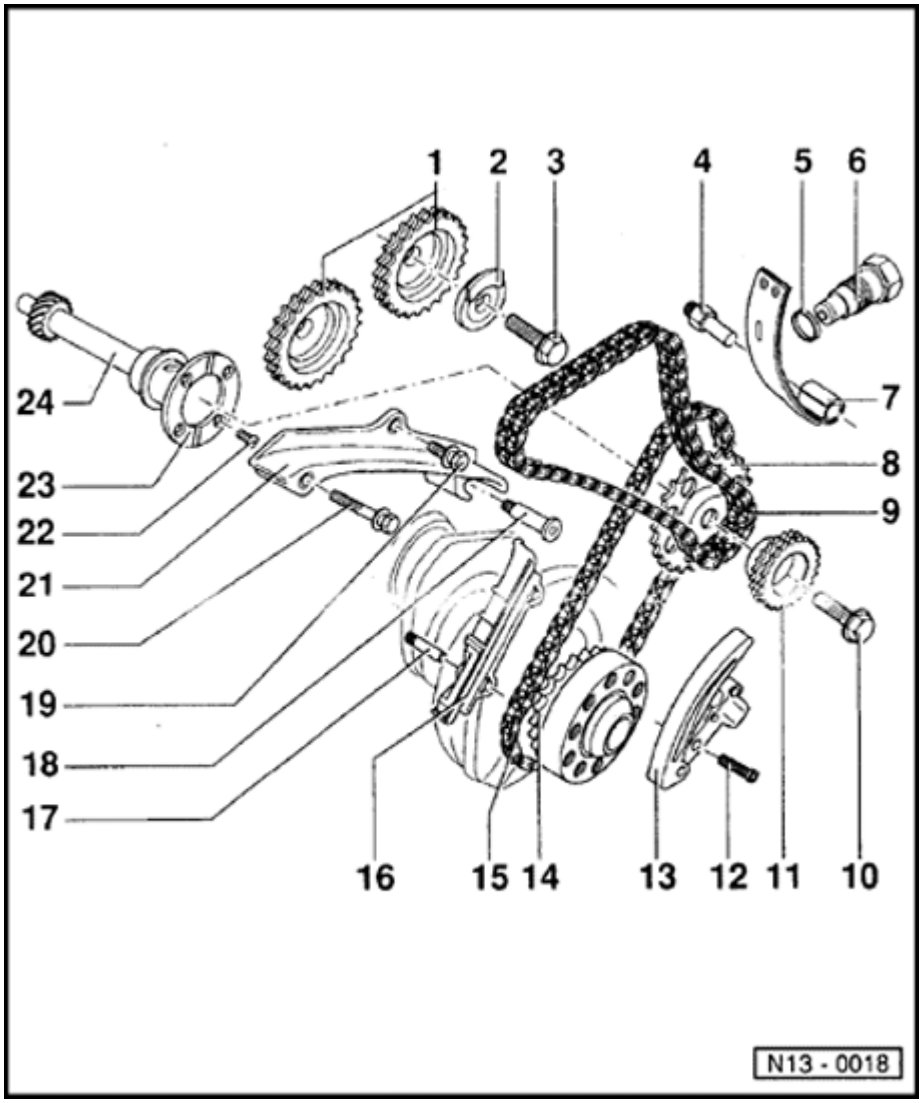

Part I

1 - Camshaft sprocket

- For double chain (item 18)
- Removing and installing ⇒ Page 15-23 , removing and installing camshafts

2 - Wheel sensor

- For Camshaft Position sensor - G40-
- Contact surface of timing chain and wheel sensor must be dry when installing
- Removing and installing ⇒ Page 15-23 , removing and installing

camshafts

3 - 100 Nm (74 ft lb)

- To remove and install counter-hold with 24 mm open end wrench on camshaft ⇒ Page 15-23 , removing and installing camshafts
- Oil the bolt head contact surface when installing

13-3

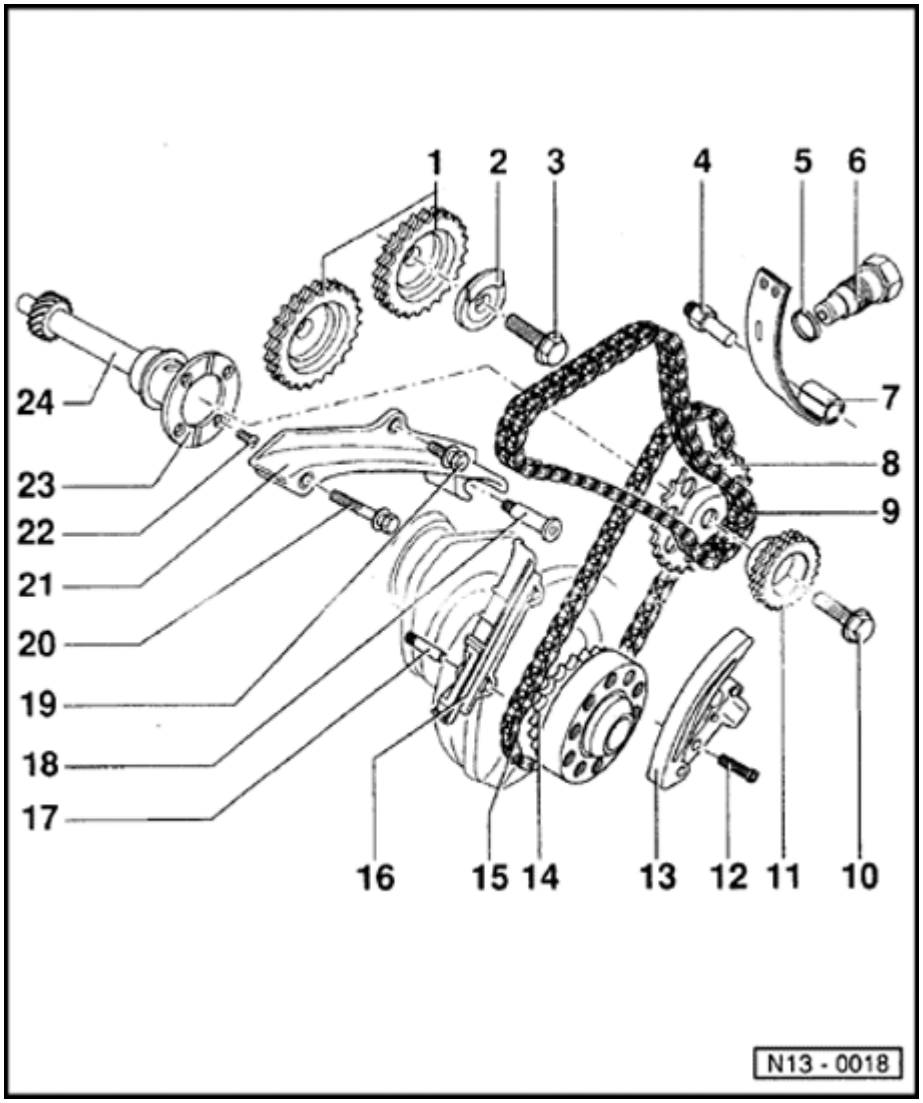

4 - Pivot pin, 25 Nm (18 ft lb)

- For tensioner plate, item 16

5 - Seal

- Always replace

6 - Chain tensioner

- 30 Nm (22 ft lb)
- For double chain (item 18)
- Bleed before installing ⇒ Fig. 2
- Only rotate engine when chain tensioner is installed

7 - Tensioning plate

- For double chain (item 18)

8 - Sprocket

- For single

chain, (item 24)

- Installing ⇒ Page 13-24 , adjusting valve timing

13-4

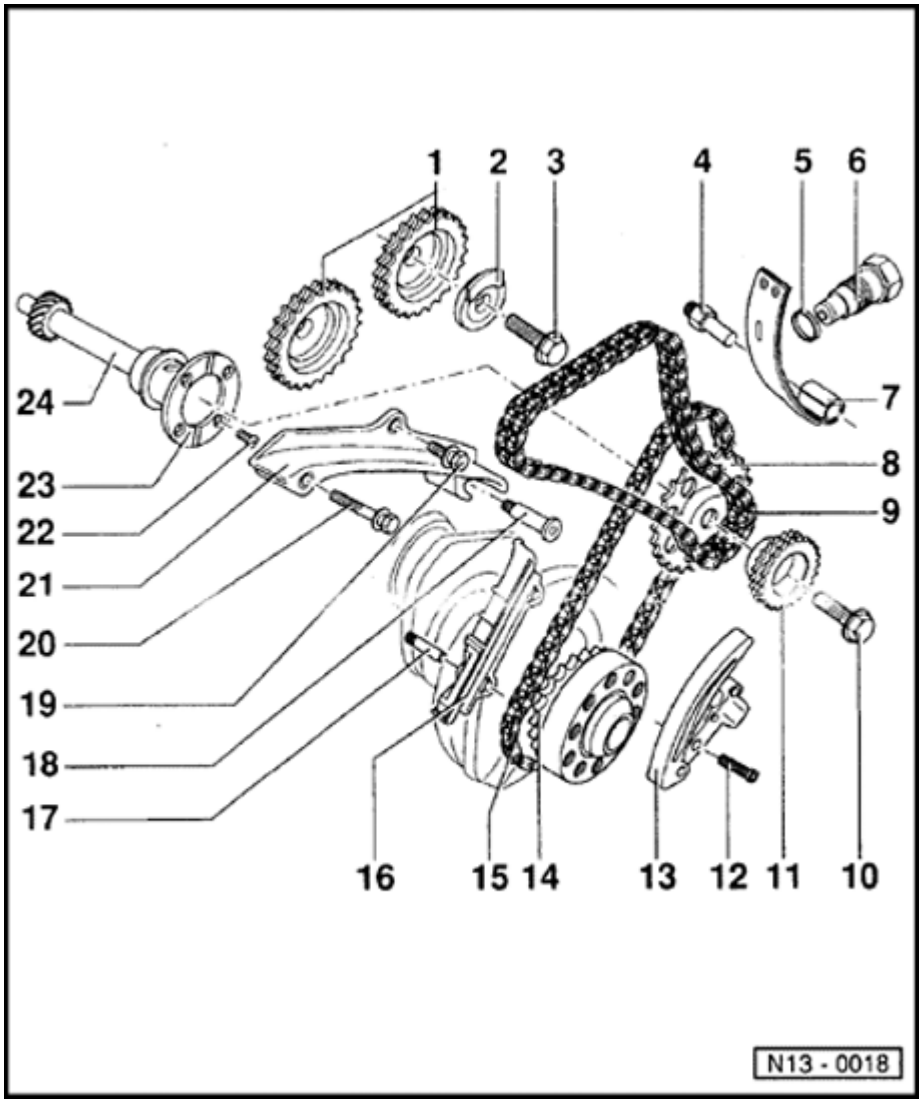

9 - Double chain

- Mark direction of rotation before removing (installed position) ⇒ Fig. 1
- Installing ⇒ Page 13-24 , adjusting valve timing

10 - 100 Nm (74 ft lb)

11 - Sprocket

- For double chain (item 18)
- Installing ⇒ Page 13-24 , adjusting valve timing

12 - 10 Nm (7 ft lb)

13 - Chain tensioner with tensioning plate

- For single chain (item 24)

- Before installing, release locking spline in chain tensioner with a small screwdriver and press tensioning plate against chain tensioner
  - Only rotate engine with chain tensioner installed

13-5

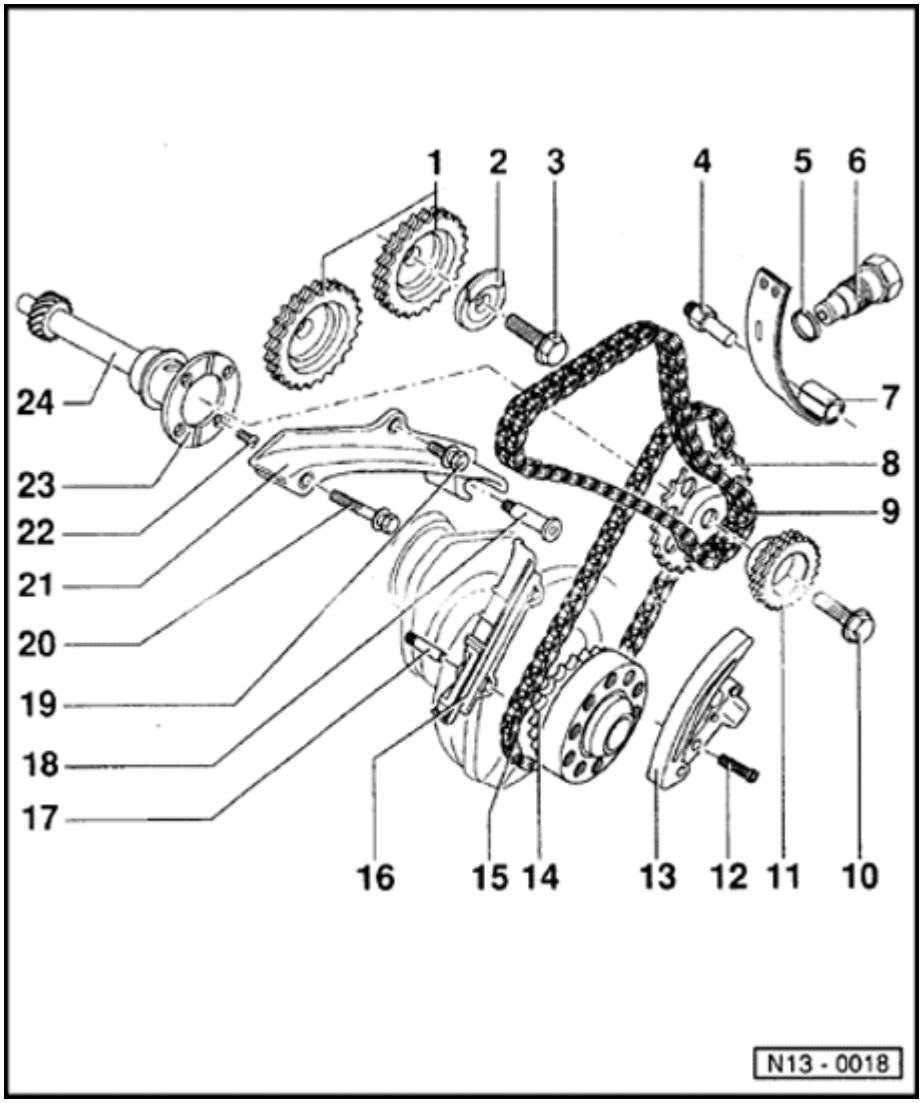

14 - Crankshaft sprocket

- Integral part of crankshaft
- Machine down tooth aligned with main bearing joint = TDC for No. 1 Cyl. ⇒ Page 13-24 , adjusting valve timing

15 - Single chain

- Mark direction of rotation before removing (installation position) ⇒ Fig. 1
- Installing ⇒ Page 13-24 , adjusting valve timing

16 - Guide rail

- For single chain (item 24)

- Remove together with single chain ⇒ Page 13-24 , adjusting valve timing

17 - Locating pin without collar

- 25 Nm (18 ft lb)
- For guide rail (item 25)

13-6

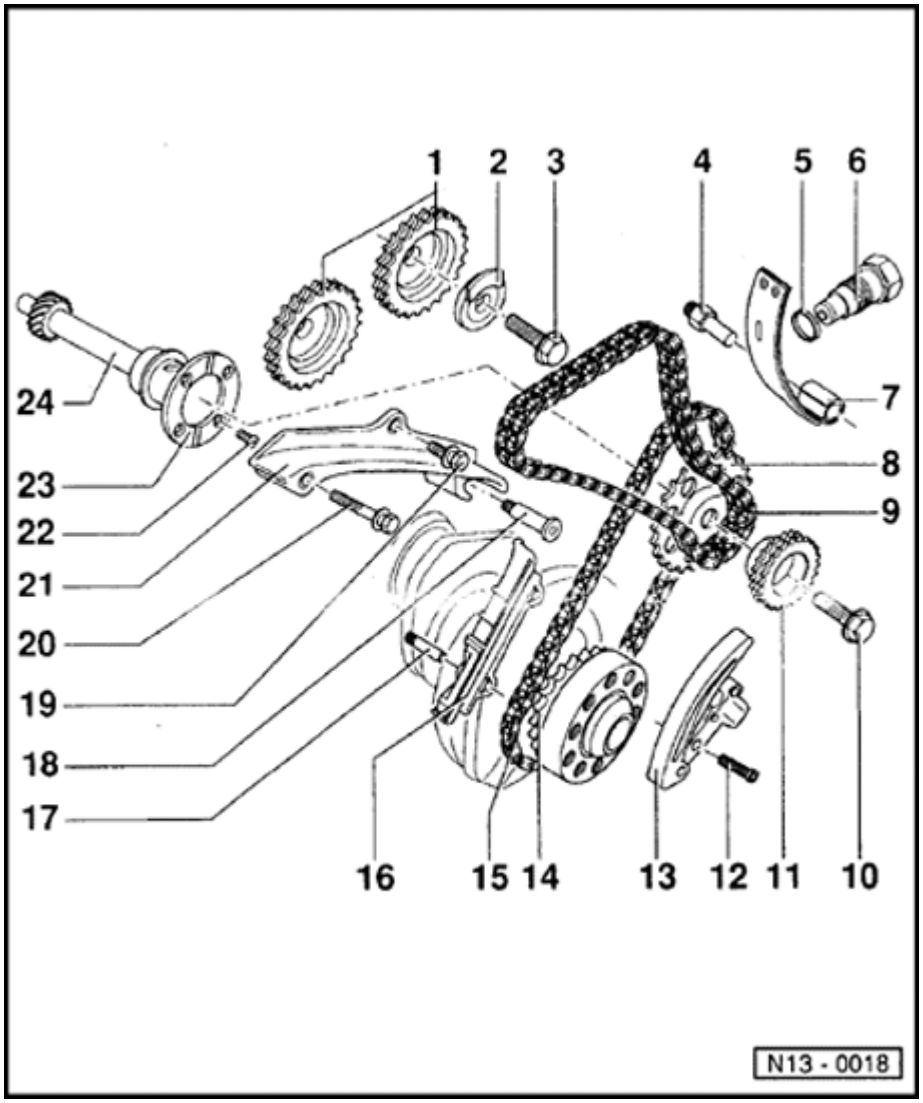

18 - Locating pin with collar

- 25 Nm (18 ft lb)
- For guide rail (item 30)

19 - 20 Nm (15 ft lb)

- Insert with locking fluid "D6"

20 - 20 Nm (15 ft lb)

21 - Guide rail

- For double chain (item 18)

22 - 10 Nm (7 ft lb)

- Insert with locking fluid "D6"

23 - Thrust washer

24 Intermediate - shaft

13-7

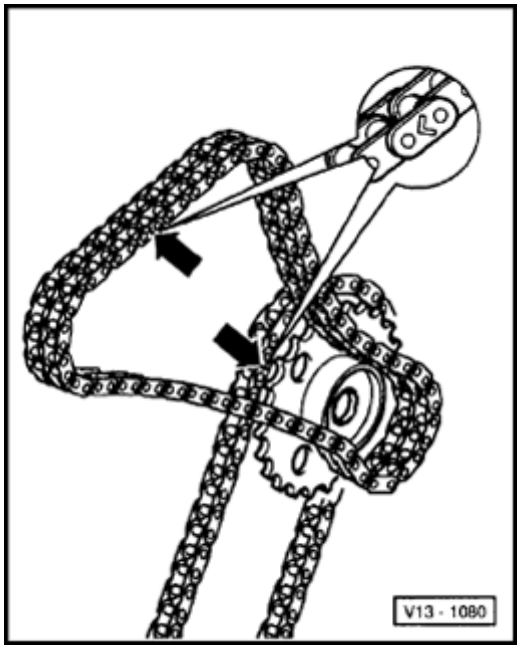

Fig. 1 Marking single and double chains

- Mark single and double chains before removing them (paint or mark an arrow pointing in direction of normal engine rotation).

Note:

Do not mark the chain using a center punch or with any method that scratches or deforms the metal surfaces.

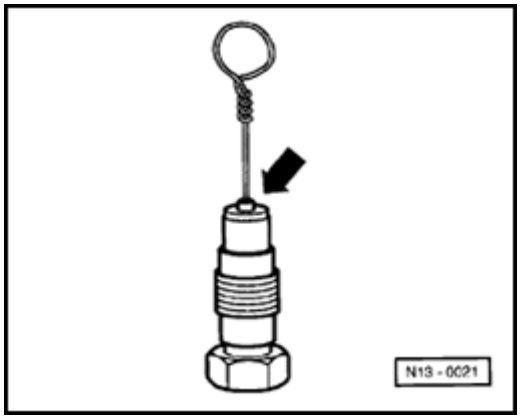

Fig. 2 Bleeding double chain tensioner

- Push a piece of wire (diameter 0.8 mm) through the hole of the pressure piston -arrow- up to ball valve and press pressure piston and housing together onto stop.

Note:

If the pressure piston moves out again, repeat bleeding procedure.

13-8

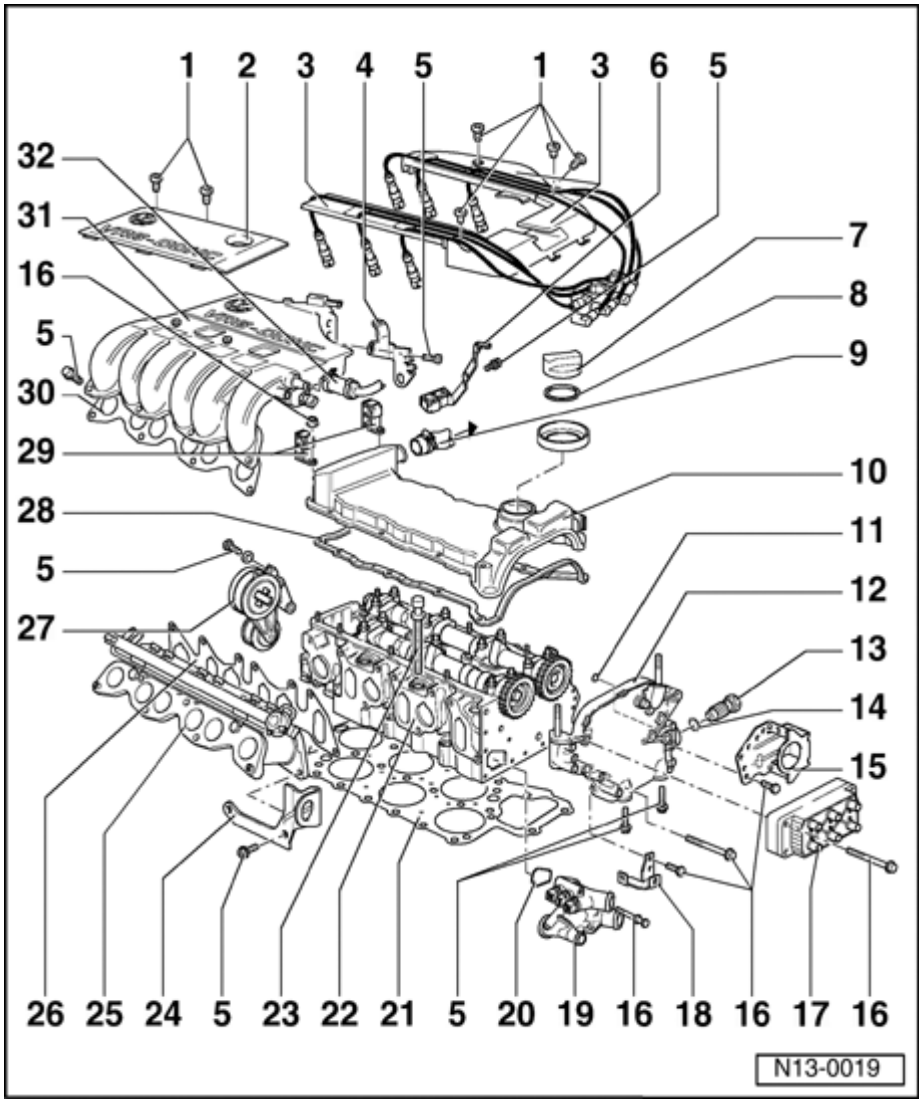

Part II

1 - 5 Nm (44 in. lb)

2 - Cover

- Over upper section of intake manifold

3 - Ignition wire guide

4 - Rear left support

- Between upper section of intake manifold and cylinder head
- With engine ground connection

5 - 25 Nm (18 ft lb)

6 - Right-rear support

- Between upper section of intake manifold and cylinder head
- With bracket

for fuel lines

7 - Cap

8 - Seal

- Replace if damaged

13-9

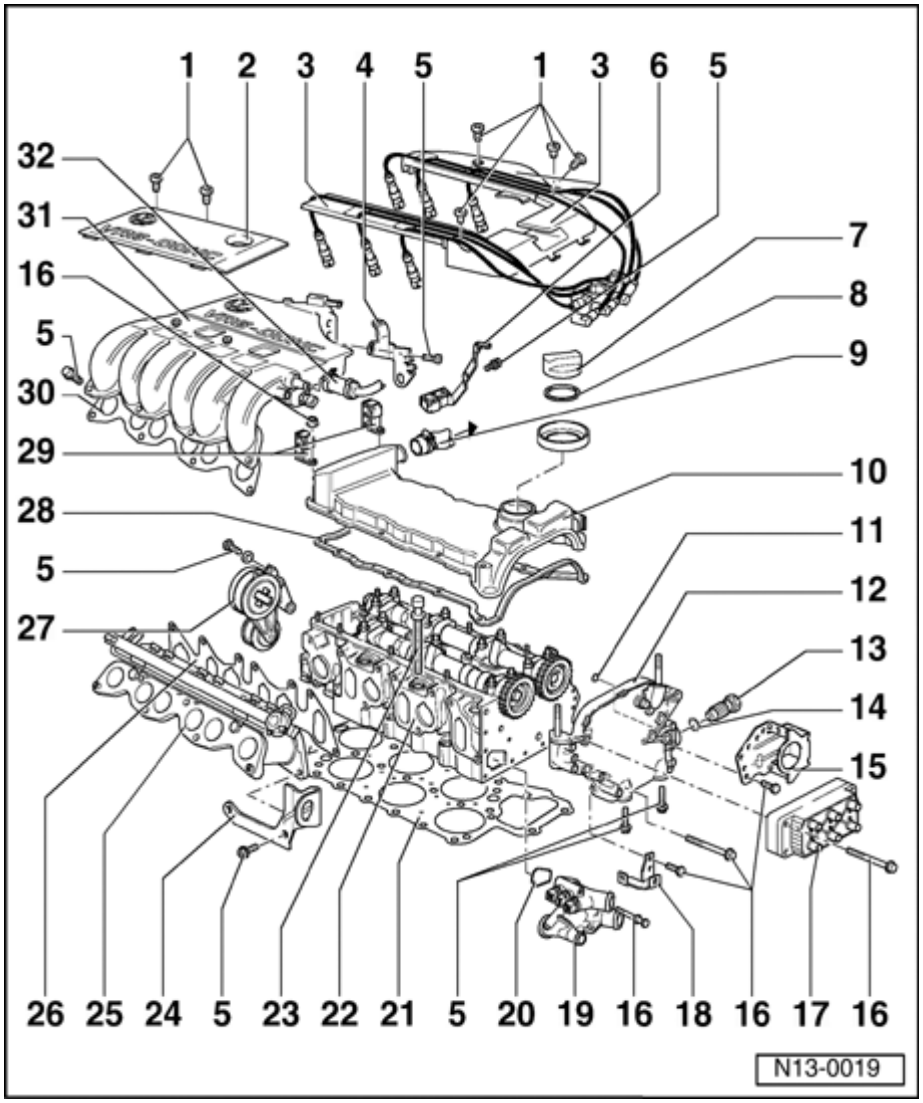

9 - Hose

- For crankcase breather
- To crankcase breather valve

10 - Cylinder head cover

- Removing and installing ⇒ Page 15-9

11 - O-Ring

- Always replace
- Coat with oil before assembling and insert in camshaft sprocket cover (item 12)

12 - Camshaft sprocket cover

- Coat sealing surfaces with AMV 188 001 02
- If only the camshaft

sprocket cover has been removed, prepare cylinder head gasket for assembly ⇒ Page 15-8 , ⇒ Fig. 2

13-10

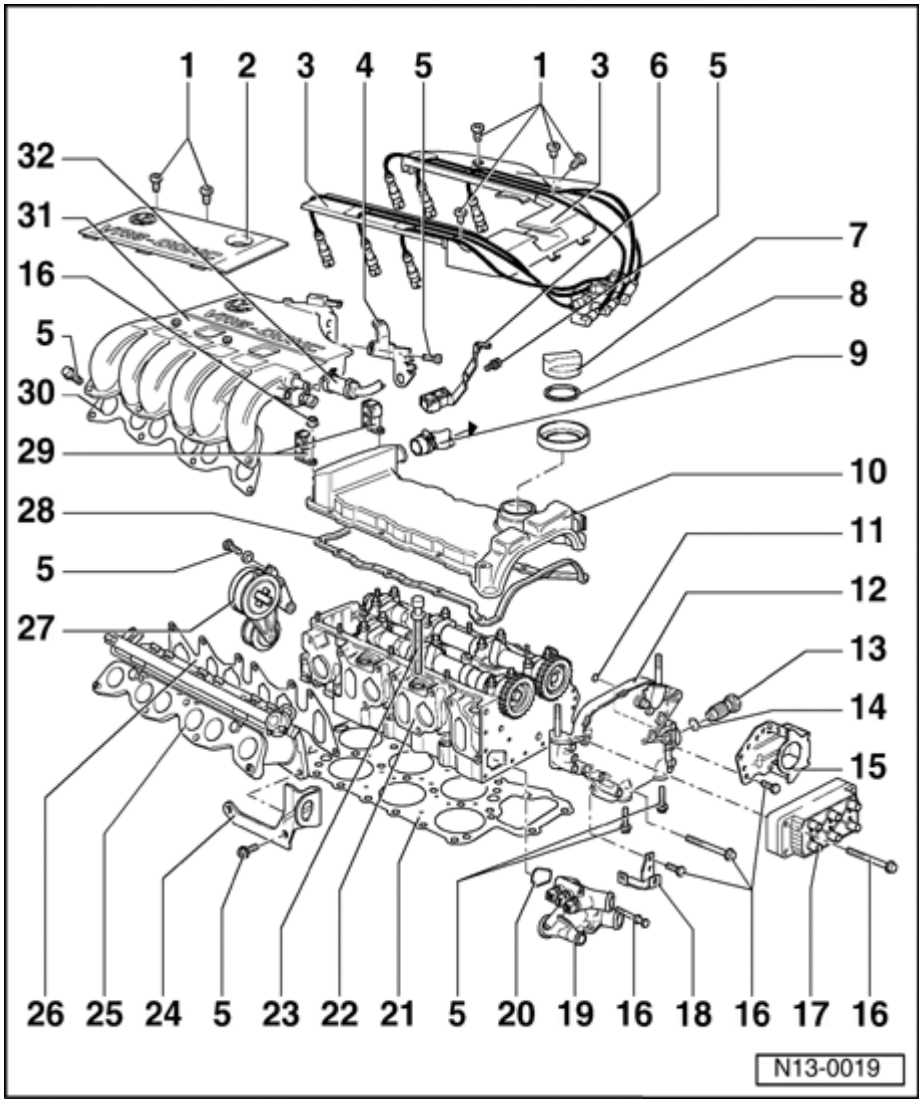

13 - Chain tensioner

- 30 Nm (22 ft lb)
- For double chain
- Bleed before installing ⇒ Page 13-7 , ⇒ Fig. 2
- Only turn engine with chain tensioner install

14 - Seal

- Always replace

15 - Bracket

- For 42-pin connector and pump for coolant continued circulation

16 - 10 Nm (7 ft lb)

17 - Ignition coil -N152- *

- Checking

18 - Bracket

- For electric wires

13-11

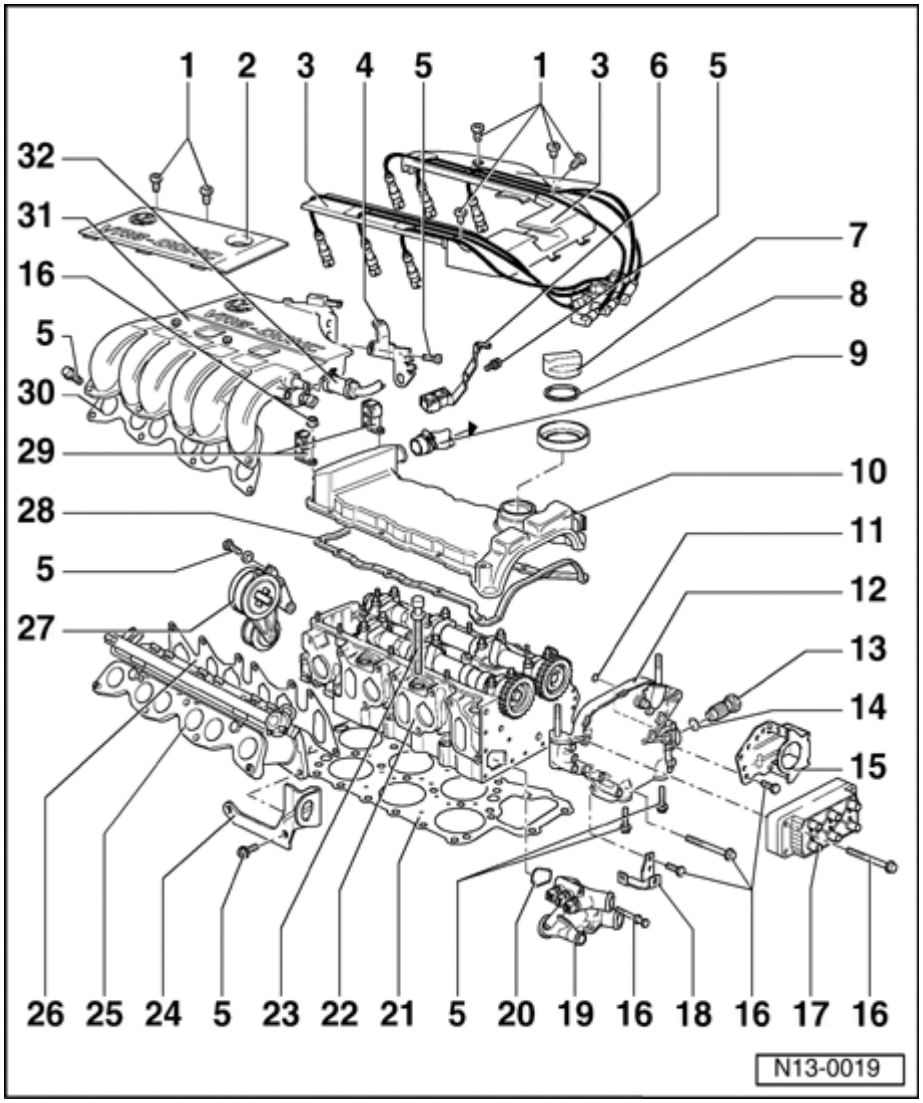

19 20Thermostat - housing

- Disassembling and assembling % ⇒ Page 19-10

21 - O-Ring

- Always replace

22 - Cylinder head gasket

- Always replace
- If replaced; also replace the complete engine coolant

23 - Cylinder head

- Removing and installing % ⇒ Page 15-1
- If replaced; also replace the complete engine coolant

24 - Cylinder head bolt

- Always replace
- Note sequence when loosening and tightening ⇒ Page 15-11

13-12

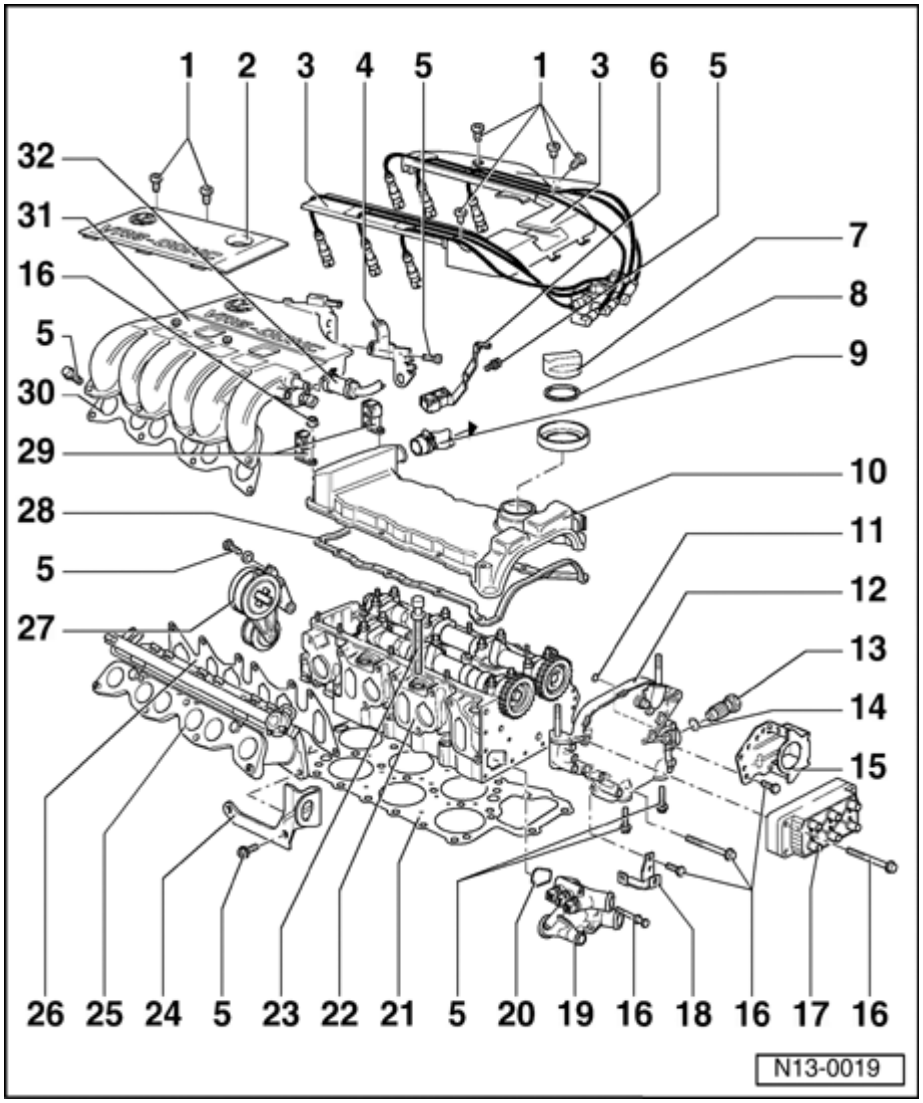

25 - Lifting eye

26 - Intake manifold - lower section

27 - Gasket for intake manifold lower section

- Always replace

28 - Ribbed belt tensioner

- Removing and installing ribbed belts ⇒ Page 13-20

29 - Cylinder head cover gasket

- Always replace
- Note installed position

30 - Bracket

- For fuel lines

31 - Gasket for intake manifol upper section

- Always replace

13-13

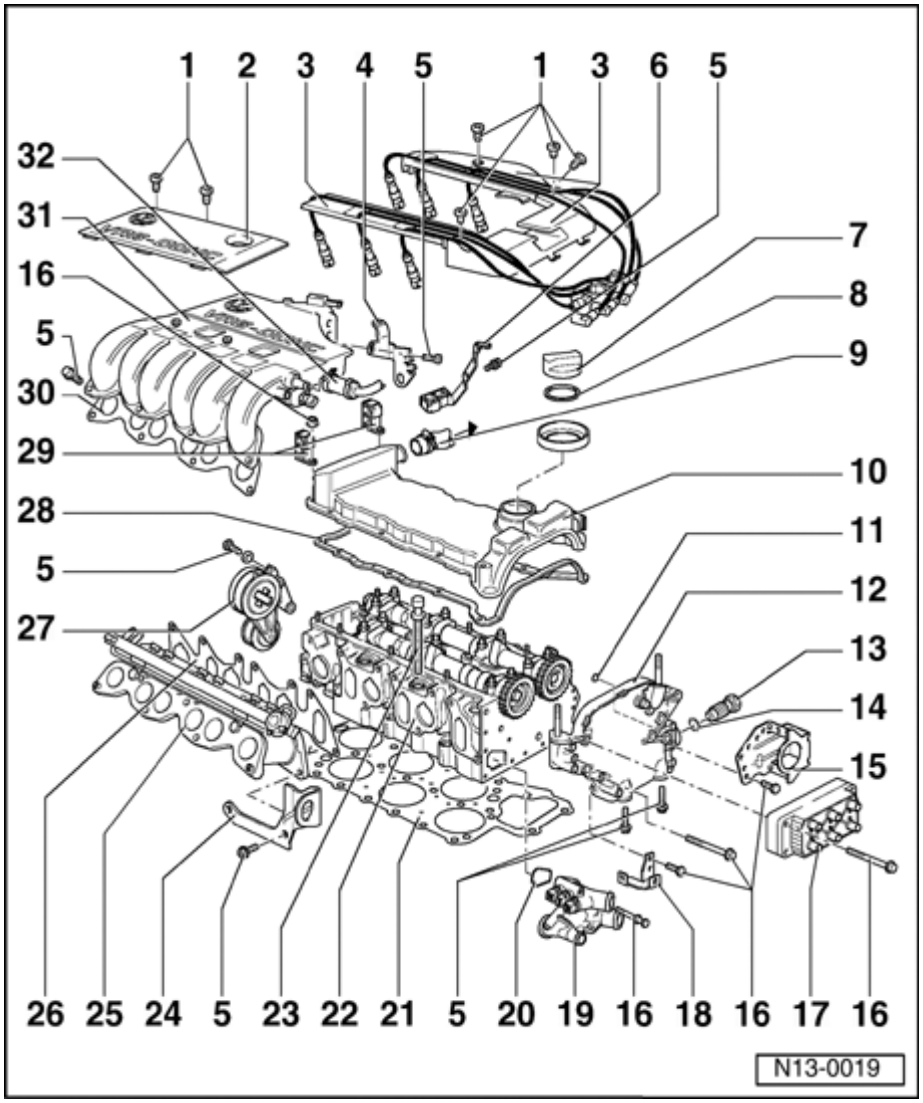

32 - Intake manifold upper section

- First tighten intake manifold lower section, then the two rear supports, (items 4 and 6)

33 - Vacuum hose

- To brake servo

13-14

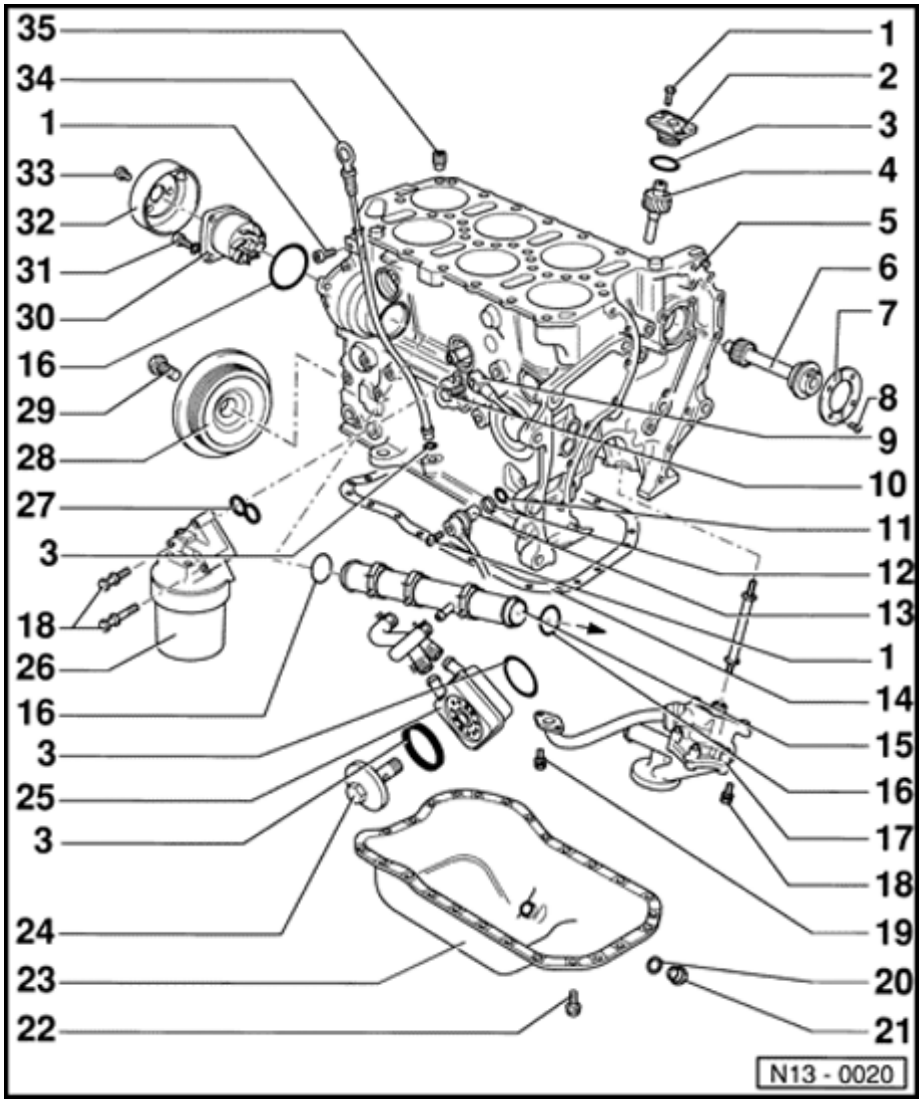

Part III

1 - 10 Nm (7 ft lb)

2 - Oil pump drive cover

3 - O-Ring

- Always replace
- Lubricate with oil before assembling

4 - Oil pump drive

5 - Cylinder block

- Removing and installing sealing flange and flywheel/drive plate ⇒ Page 13-33
  - Removing and installing crankshaft ⇒ Page 13-40
- Disassembling and assembling pistons and con-rods % ⇒ Page 13-43

6 - Intermediate shaft

7 - Thrust washer

13-15

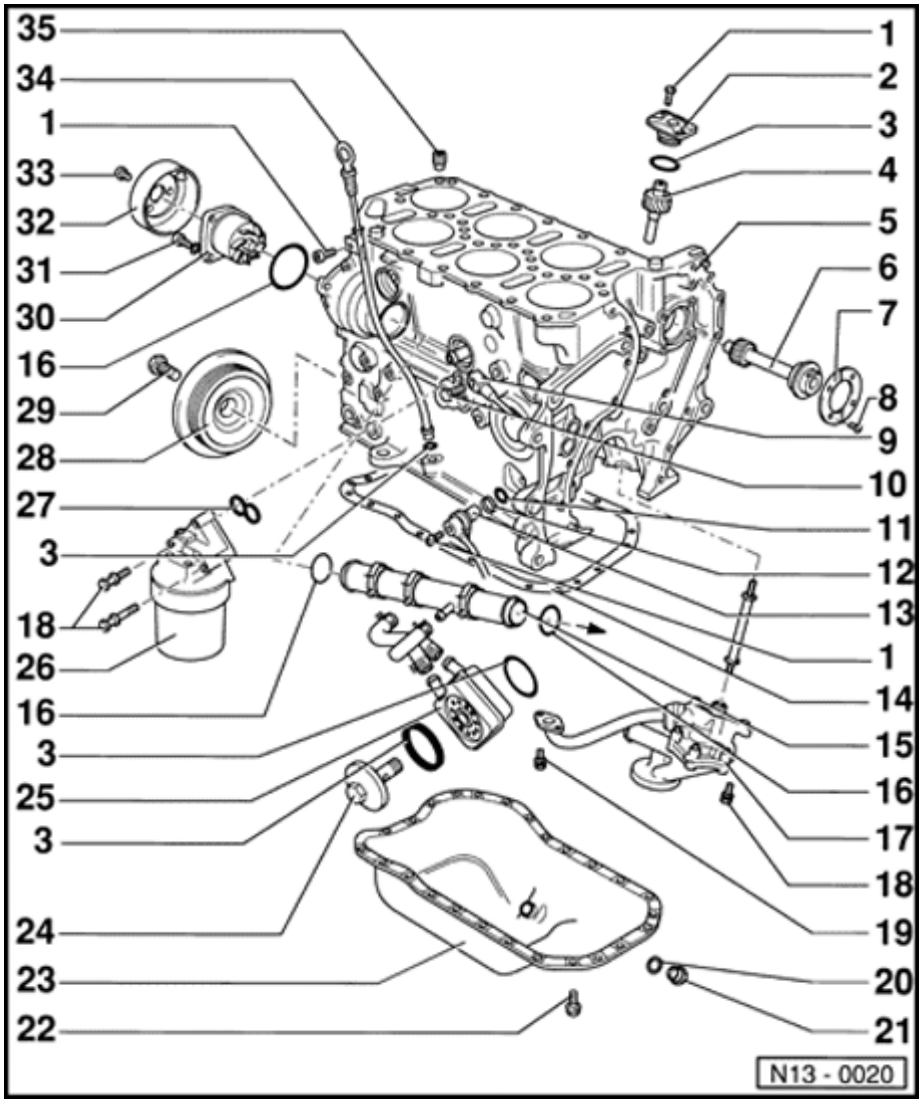

8 - 10 Nm (7 ft lb)

- Insert using locking "D6" fluid

9 - Knock sensor 2 - G66-

- Checking, see Repair Group 01

10 - 20 Nm (15 ft lb)

- Tightening torque influences the function of the knock sensor

11 - O-Ring

- Replace if damaged

12 - Spacer ring

13 - Engine Speed sensor - G28-

- Checking, Repair Group 01
- When installing, coat contact

surface
of sensor
with AMV
74 004
01

13-16

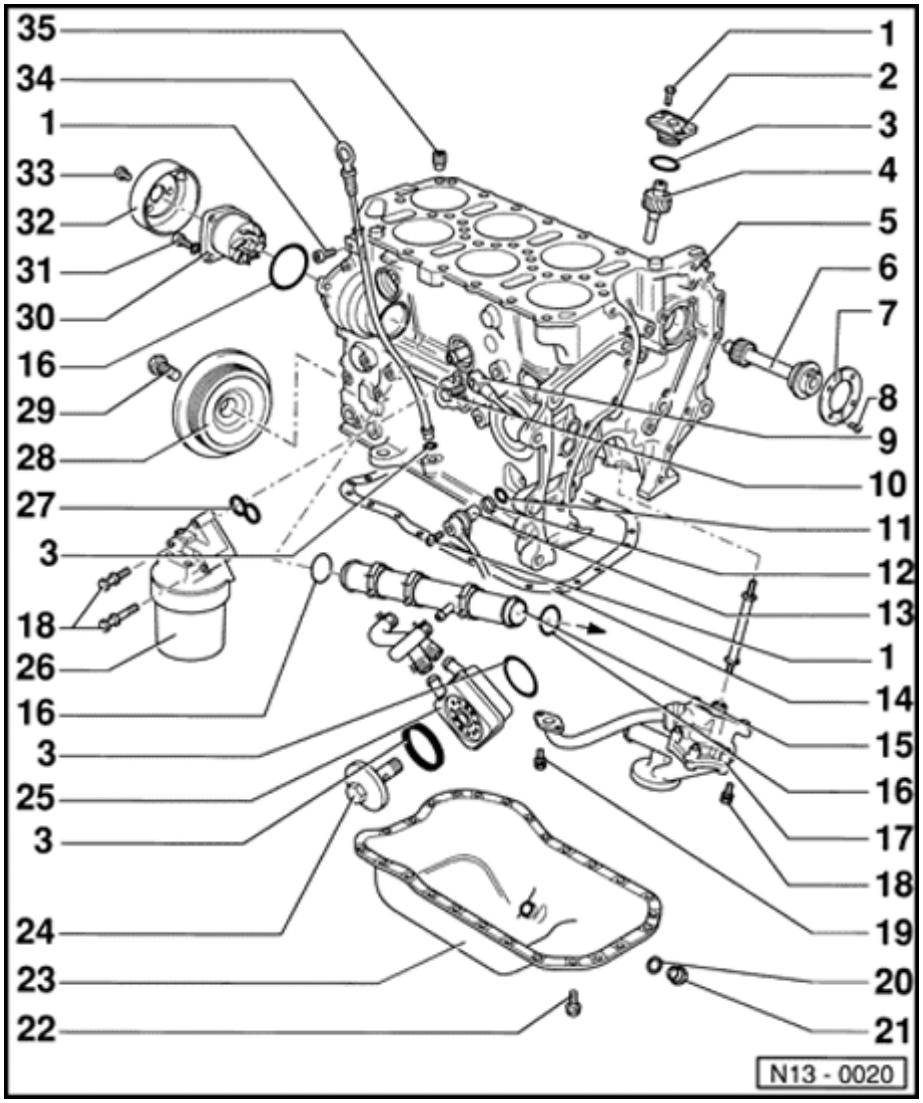

14 - Gasket

- Replace if damaged

- Before installing gasket, coat sump flange/cylinder block flange with "D2"

15 - Coolant line

- To thermostat housing ⇒ Page 13-11 (item 19)

- Removing and installing ⇒ Page 19-5 , parts of cooling system - engine side

16 - O-Ring

- Always replace

17 - Oil pump

- Disassembling and assembling ⇒ Page 17-11

- Coat oil pressure pipe on

cylinder block and oil pump housing with AMV 188 001 02	**18 - 25 Nm (18 ft lb)**

13-17

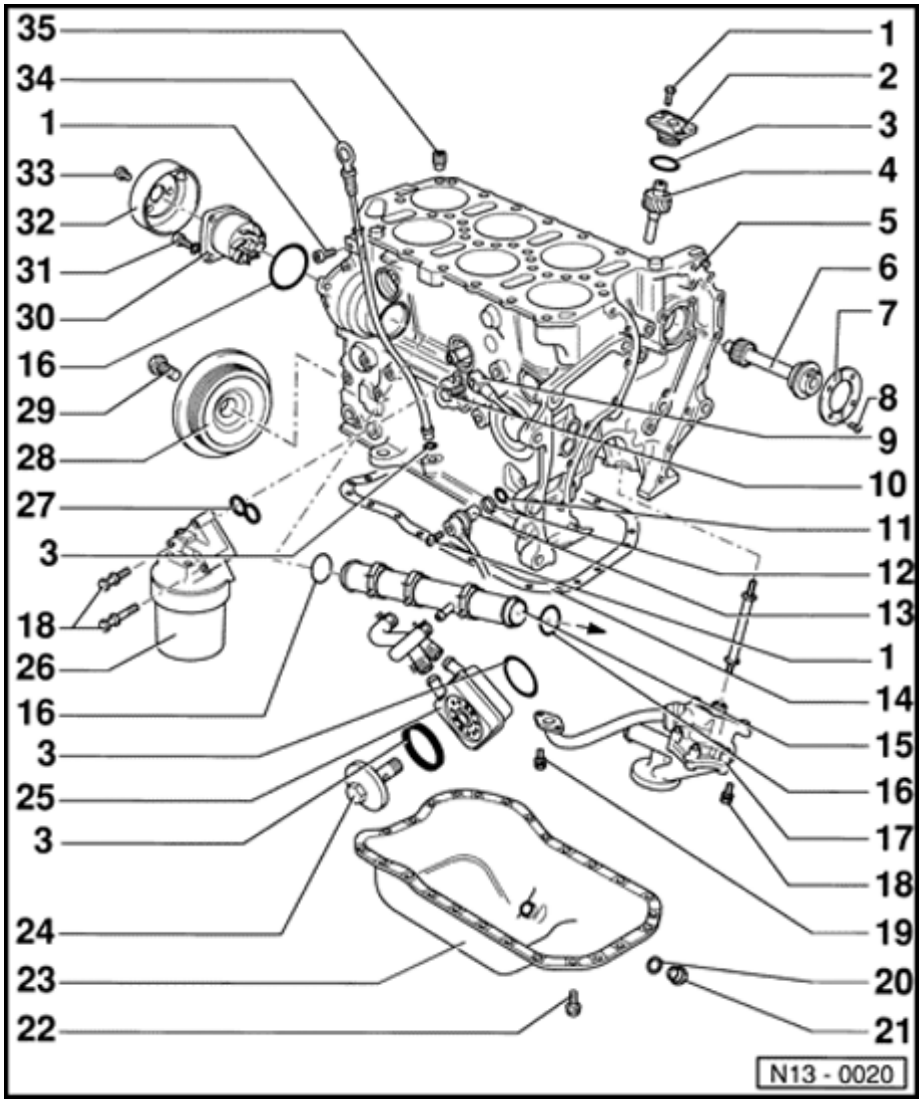

19 - 10 Nm (7 ft lb)

- Insert with locking "D6" fluid

20 - Seal

- Always replace

21 - Oil drain plug

- 30 Nm (22 ft lb)

- Replace if leaking. See Parts Catalog for correct application. In some cases, seal and drain plug are combined; do not interchange with separate seal and drain plug

22 - 15 Nm (11 ft lb)

23 - Sump

- Clean sealing surface before installing

24 - Oil cooler cover

- 25 Nm (18 ft lb)

25 - Oil cooler

- Coat contact area outside the seal with AMV 188 100 02

- Make sure clearance with adjacent components
  - See note ⇒ Page 13-1

13-18

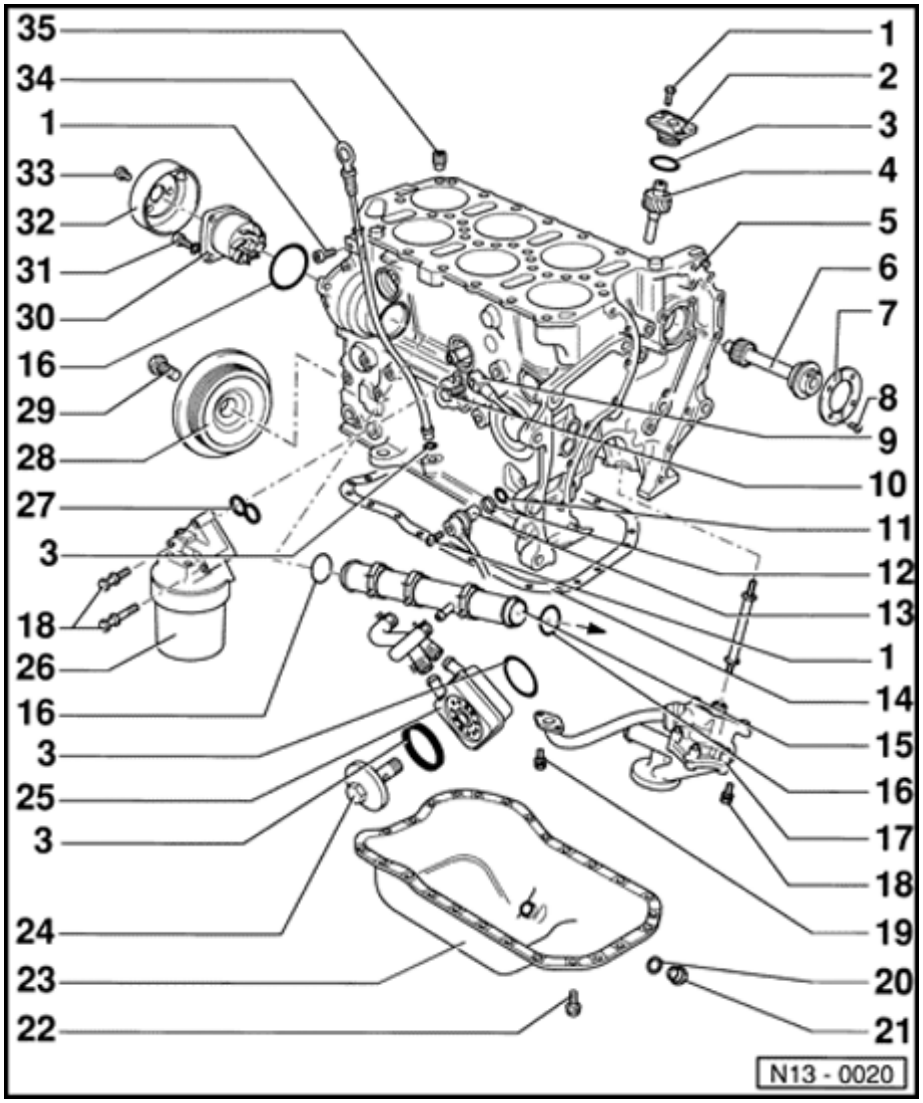

26 - Oil filter housing

- Disassembling and assembling ⇒ Page 17-8

27 - Gasket

- Always replace
- Note installation position
- Lubricate with oil before installing

28 - Vibration damper

- Removing and installing ribbed belt ⇒ Page 13-20

29 - 120 Nm (88 ft lb) + $^{1}/_{4}$ turn (90°) further

- Replace
- Counter-hold with 3273 to loosen and tighten

30 - Coolant pump

- Check shaft for ease of movement
- Removing and installing ⇒ Page 19-17

13-19

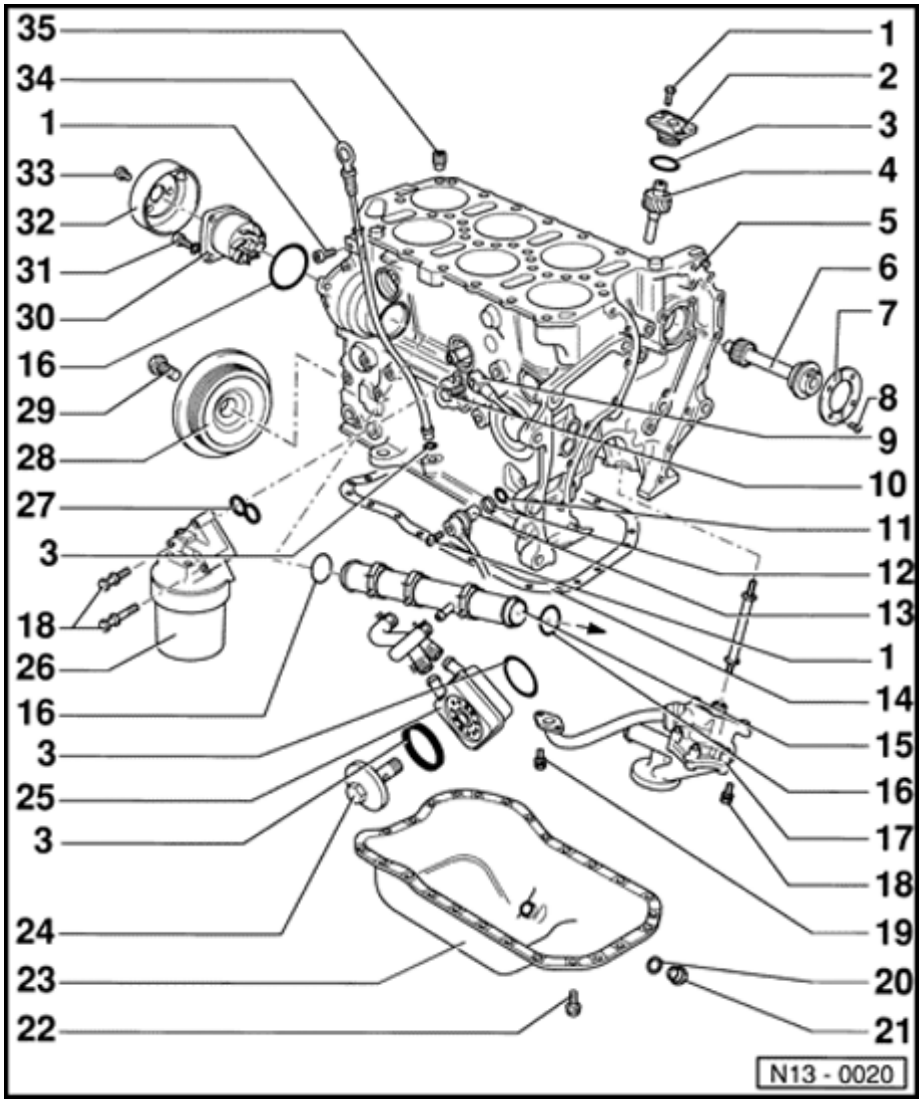

31 - 20 Nm (15 ft lb)

32 - Pulley

- For coolant pump

33 - 25 Nm (18 ft lb)

- Use V.A.G 1590 to loosen and tighten
- Modify water pump wrench VAG 1590 ⇒ Page 19-9 , ⇒ Fig. 1

34 - Dipstick

- The oil level must not be above the max. mark!

35 - Oil check valve

- 5 Nm (44 in. lb)
- Note installed position
- Clean if dirty

- See note
  ⇒ Page 13-1

13-20

Ribbed belt, removing and installing

Note:

When installing the ribbed belt, make sure that is correctly seated in the pulley.

Removing

- Disconnect EVAP canister purge regulator v 1 -N80- with retaining ring from air cleaner lc section ⇒ Page 20-21 .

- Remove air cleaner housing complete with M Air Flow sensor -G70-, ⇒ Repair Group 24.

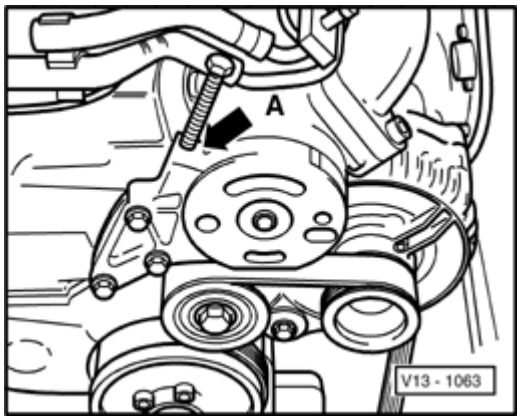

- Screw an M8x8O bolt into threaded hole -A- tensioner) until ribbed belt tension is no long present.

Note:

Screw bolt in until the ribbed belt can be remov otherwise the tensioner housing can be damag

- Remove ribbed belt.

13-21

Installing

Note:

Before installing the ribbed belt make sure that all sub-assemblies (generator, A/C compressor and power steering pump) are tight.

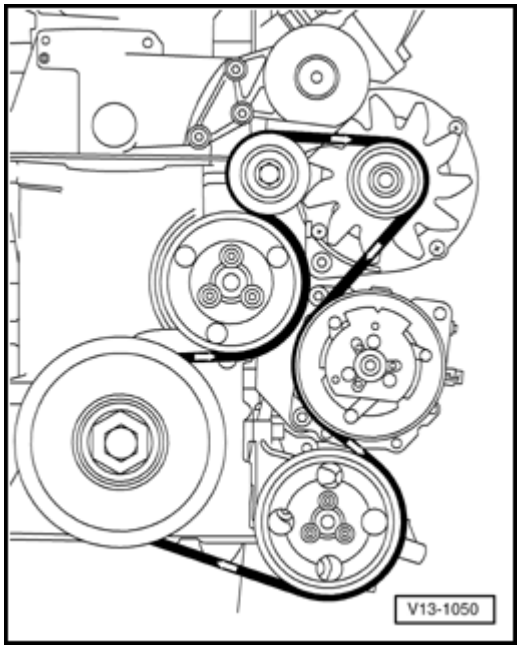

- Install ribbed belt.
- Remove M8 bolt from the tensioner!
- Install air cleaner housing complete with Mass Air Flow sensor -G70-.
- Connect EVAP canister purge regulator valve 1 -N80- with retaining ring to lower section of air cleaner.
- Start engine and observe belt running.

Note:

Vehicles with A/C are equipped with a double ribbed belt.

13-22

Valve timing, checking

- Set crankshaft to TDC No. 1 Cyl. marks by turning crankshaft on the vibration damper securing bolt in engine D.O.R.:

Vehicles with manual transmission and engine installed

Mark on the pressure plate (triangular tooth) must align with the reference point cast in clutch housing

Vehicles with manual transmission and engine removed

The TDC mark milled in the flywheel must align with the reference point cast on flange -arrow-.

13-23

Vehicles with automatic transmission and engine installed

Note:

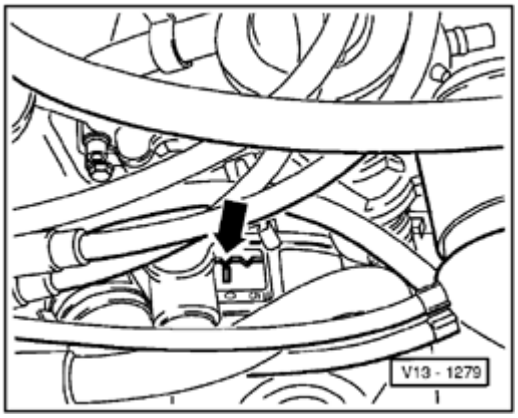

The torque converter has 3 TDC No. 1 cylinder marks -arrow-, as the hole pattern for securing the torque converter allows it to be installed in three different positions. Therefore it is necessary to check No. 1 Cyl. piston TDC position through the spark plug hole, if necessary turn the crankshaft by 120° or 240° in engine direction of rotation.

Vehicles with automatic transmission and engine removed

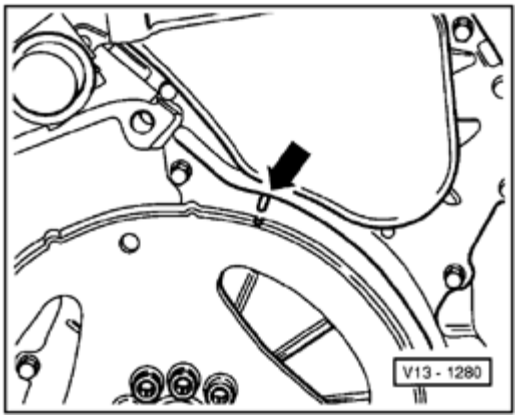

The mark milled in the drive plate must align with the reference point cast on flange -arrow-.

All vehicles

- Remove cylinder head cover ⇒ Page 15-9

13-24

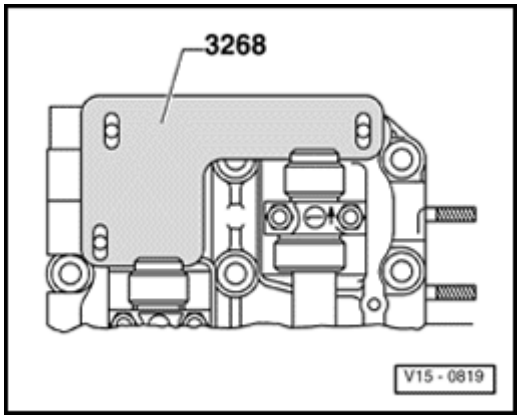

- The camshaft jig 3268 must index in both shaft grooves.

Note:

This condition is only possible every 2nd TDC position.

13-25

Valve timing, adjusting

(with timing chains removed)

Engine removed

Install single chain and chain tensioner with tensioning plate:

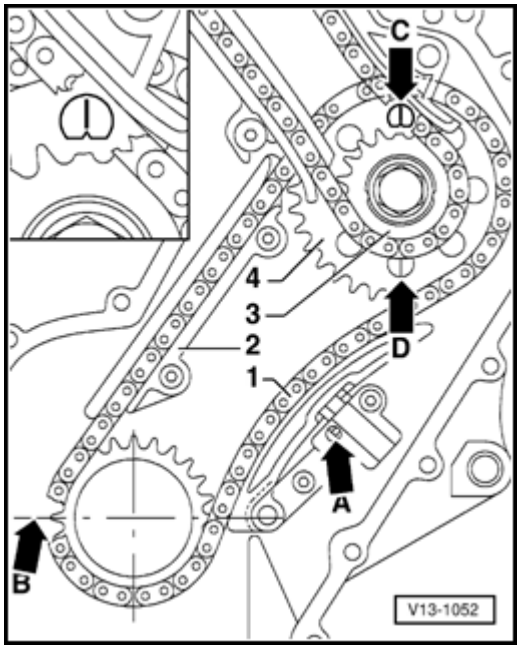

- Set and check position of crankshaft to intermediate shaft. Machine tooth on crankshaft sprocket -B- must align with the main bearing joint (TDC No. 1 Cyl.).
- Install pin without collar for guide rail -2- and tighten to 25 Nm (18 ft lb).

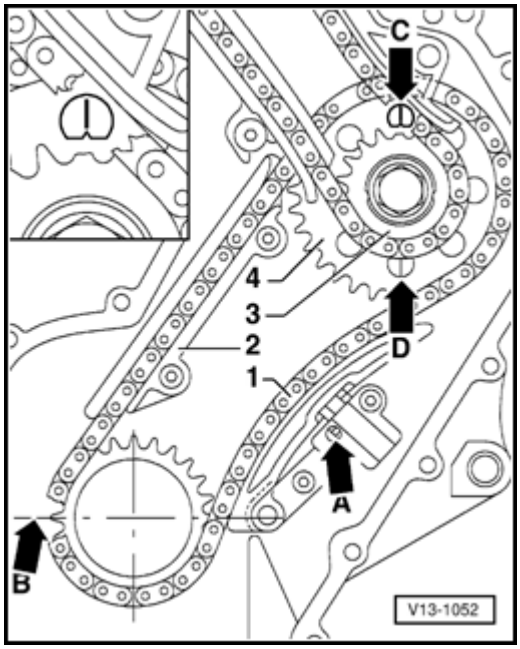

- Install guide rail -2- with single chain -1- and both sprockets -3- and -4- (note direction of rotation of single chain ⇒ Page 13-7 , ⇒ Fig. 1)

  The marking on single chain sprocket 4 must align with the notch -C- or -D- on the thrust washer.

- Release locking spline in chain tensioner with a small screwdriver -A-.

- Press chain tensioner against tensioner plate and tighten chain tensioner to 10 Nm (7 ft lb).

Vehicles with manual transmission

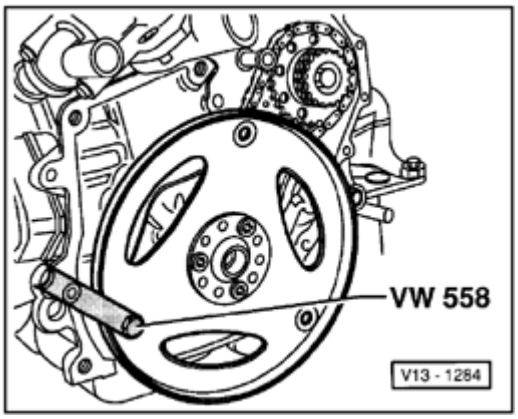

- With 3 old bolts and counter-hold with VW 558 tighten flywheel to crankshaft.

Vehicles with automatic transmission

- Secure drive plate to crankshaft with 3 old bolts.

- Secure counter-hold tool VW 558 to the drive plate with a hex bolt M8x45. Place two M10 hex nuts between counter-hold tool and drive plate.

13-27

All vehicles

- Tighten intermediate shaft sprockets 3 and 4 Page 13-24 , illustration V13-1052) to 100 N (74 ft lb).

- Remove flywheel and drive plate and check position of crankshaft to intermediate shaft.

Install double chain and chain tensioner with tensioning plate:

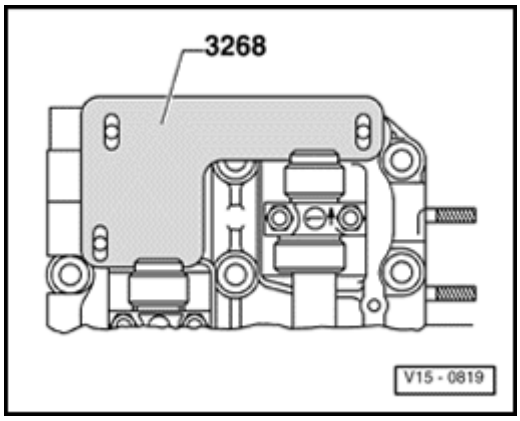

- Locate camshafts with camshaft jig 3268.
- Install tensioning plate pivot pins and tighten 25 Nm (18 ft lb).
- Install tensioning plate for chain tensioner (double chain).
- Install locating pin with collar for guide rail ar tighten to: 25 Nm (18 ft lb).

Note:

With cylinder head removed:

- Installing cylinder head ⇒ Page 15-11 .

- Place guide rail on locating pin. Insert short securing bolt with locking fluid "D6" and tighten both bolts to 20 Nm (15 ft lb).

- Place double chain on intermediate shaft. (Note direction of rotation of double chain ⇒ Page 13-7 , ⇒ Fig. 1).

- Install camshaft sprocket and double chain to camshaft for cylinders 2, 4 and 6 (short camshaft) and hand tighten.

- Install camshaft sprocket with wheel sensor for camshaft position sensor -G40- and double chain to camshaft for cylinders 1, 3 and 5 and hand tighten.

Notes:

- *Make sure that the contact surfaces of the timing chain and wheel sensor are dry when installing.*

- *When installing bolts oil contacting surfaces.*

- Remove camshaft jig 3268.

- Tighten camshaft sprocket mounting bolts to: 100 Nm (74 ft lb).

13-29

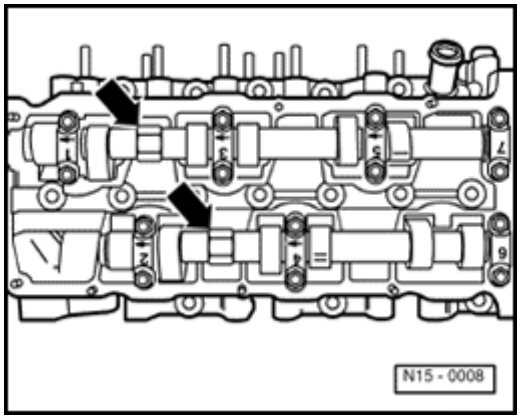

Note:

Only counter-hold with 24 mm open end wrench on the camshaft -arrow-. The camshaft jig must not be installed when tightening and loosening the sprockets.

- Coat sealing surface of sealing flange with AMV 188 001 02 and install. Tighten mounting bolt to 10 Nm (7 ft lb).
- Replace sealing flange oil seal ⇒ Page 13-33 .
- Prepare cylinder head gasket for assembly ⇒ Page 15-8 , ⇒ Fig. 2
- Coat camshaft sprocket cover sealing flange with AMV 188 001 02.
- Oil O-ring (⇒ Page 13-9 , item 11) and insert in camshaft sprocket cover.
- Install camshaft sprocket cover, insert all mounting bolts and tighten slightly.
- First tighten M8 securing bolt to 25 Nm (18 ft lb) then M6 securing bolts to 10 Nm (7 ft lb).
- Install double chain chain tensioner and tighten to 30 Nm (22 ft lb).

Notes:

- *If the chain tensioner has been pulled apart bleed chain tensioner before installing* ⇒ *Pa 13-7* , ⇒ *Fig. 2*

- *Only turn engine with chain tensioner instal Otherwise single or double chain will jump!*

- Turn crankshaft two full turns in direction of engine running and check valve timing ⇒ Pa 13-21 .

Engine installed, cylinder head removed

- Set crankshaft to TDC No. 1 Cyl. by turning engine in running direction using the vibratio damper securing bolt.

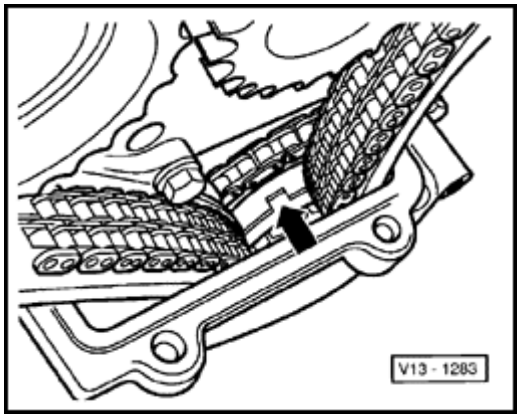

If the TDC No. 1 Cyl. setting is correct it is pos to see a notch on the intermediate shaft sprock arrow-.

If the notch cannot be seen:

- Turn crankshaft one full turn in engine runnir direction

Note:

If the crankshaft is turned with the cylinder hea removed, a 2nd mechanic should guide the do chain by hand to prevent it from jamming.

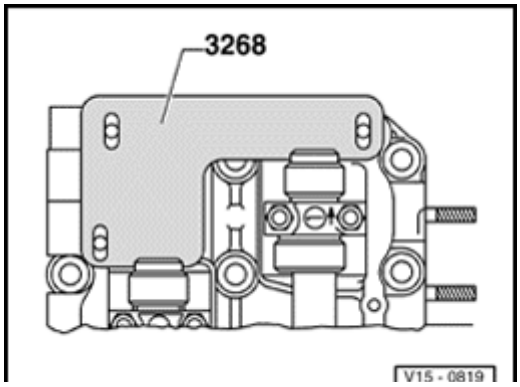

- Locate camshafts using camshaft jig 3268.

- Prepare cylinder head gasket for assembly ⇒ Page 15-8 , ⇒ Fig. 2

- Install cylinder head ⇒ Page 15-11

- Place guide rail on locating pin. Insert short securing bolt with locking fluid "D6" and tighten bolts to 20 Nm (15 ft lb).

- Install camshaft sprocket and double chain to camshaft for cylinders 2, 4 and 6 (short camshaft) and tighten by hand.

- Install camshaft sprocket with trigger wheel for Camshaft Position Sensor -G40- and double chain to camshaft for cylinders 1, 3 and 5 and tighten by hand

Notes:

- *Contact surface of timing chain and trigger wheel must be dry when installing.*

- *When installing bolt heads oil contact surface.*

- Remove camshaft jig 3268.

- Tighten securing bolts for camshaft sprockets to 100 Nm (74 ft lb).

13-32

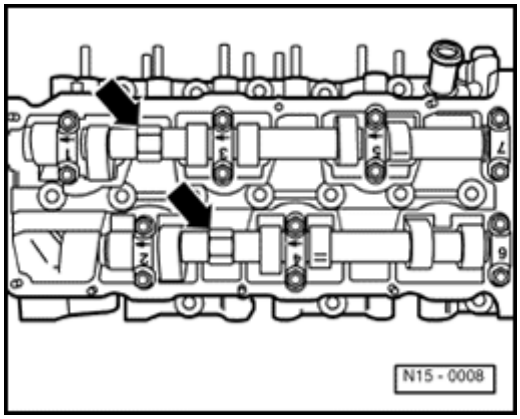

Note:

Only counter-hold with 24 mm open end wrench on the camshaft -arrow-. The camshaft jig must not be installed when tightening and loosening the sprockets.

- Coat sealing surface of sealing flange with AMV 188 001 02.
- Oil O-Ring (⇒ Page 13-9 , item 11) and insert in camshaft sprocket cover.
- Install camshaft sprocket cover, insert all securing bolts and tighten lightly.
- First tighten M8 securing bolt to 25 Nm (18 ft lb) then M6 securing bolts to 10 Nm (7 ft lb).
- Install double chain chain tensioner and tighten to 30 Nm (22 ft lb).

Notes:

- *If the chain tensioner has been pulled apart, bleed chain tensioner before installing ⇒ Page 13-7 , ⇒ Fig. 2*
- Only turn engine with chain tensioner installed! Otherwise single or double chain will jump!

- Turn crankshaft two full turns in direction of engine running and check valve timing ⇒ Page 13-21 .

13-33

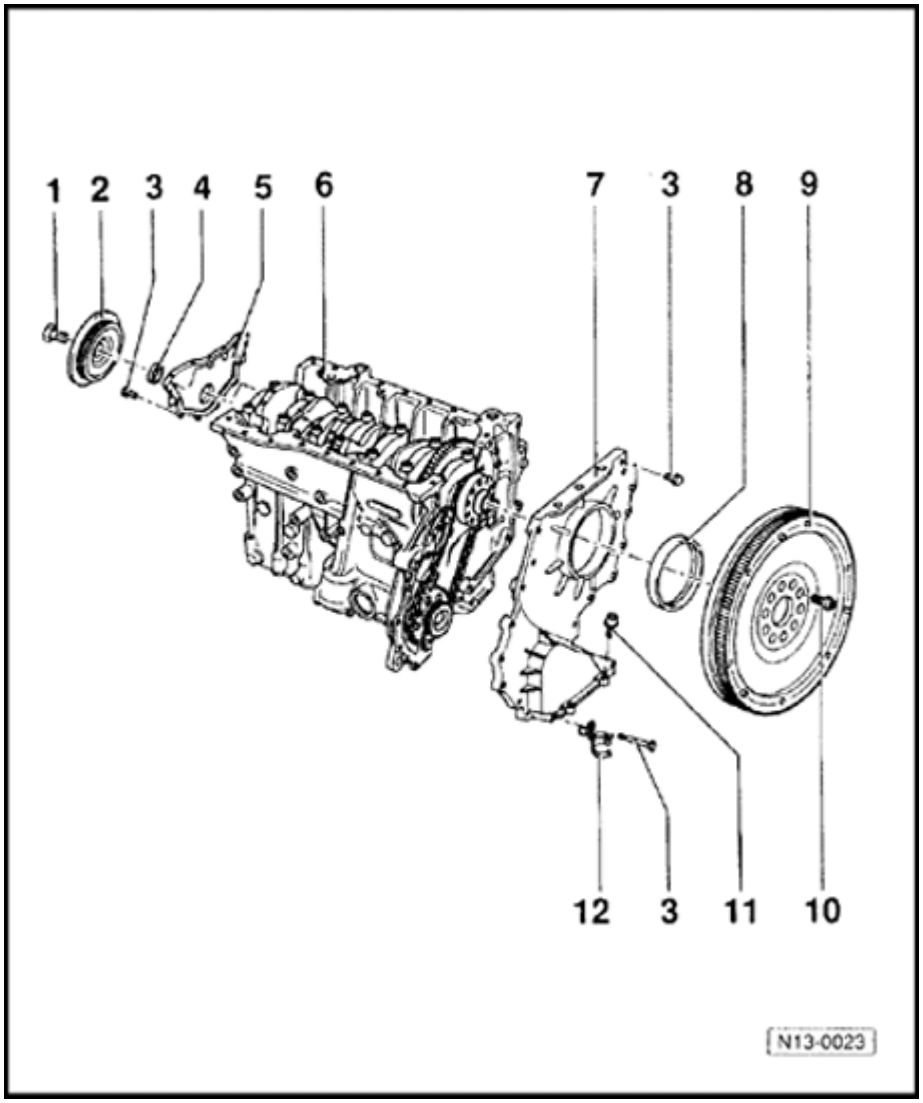

Flywheel sealing flange and drive plate, removing and installing

Note:

The sealing flange (item 7) can be removed and installed with the cylinder head installed.

⇒ *Repair Manual, 5 Spd. Manual Transmission 02A, Repair Group 30;For repairs to the clutch:*

1 - 100 Nm (74 ft lb) + $^{1}/_{4}$ turn (90 °) further

- Always replace
- Counter-hold with 3273 to loosen and tighten

2 - Vibration damper

3 - 10 Nm (7 ft lb)

13-34

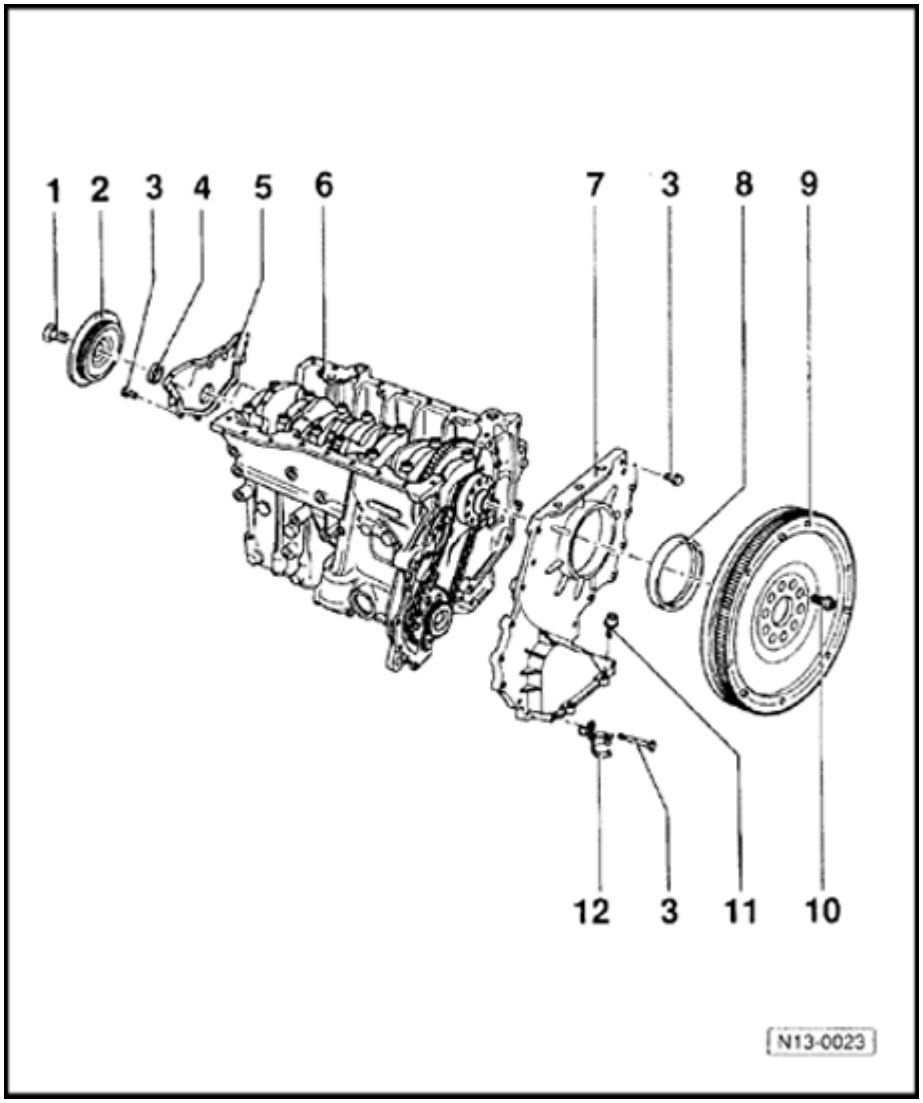

4 - Oil seal

- Replacing ⇒ Page 13-36

5 - Sealing flange

- Coat sealing surfaces with AMV 188 001 02

6 - Cylinder block

- Removing and installing crankshaft ⇒ Page 13-40

- Disassembling and assembling pistons and connecting rods ⇒ Page 13-43

7 - Sealing flange

- Coat sealing surfaces with AMV188 001 02

13-35

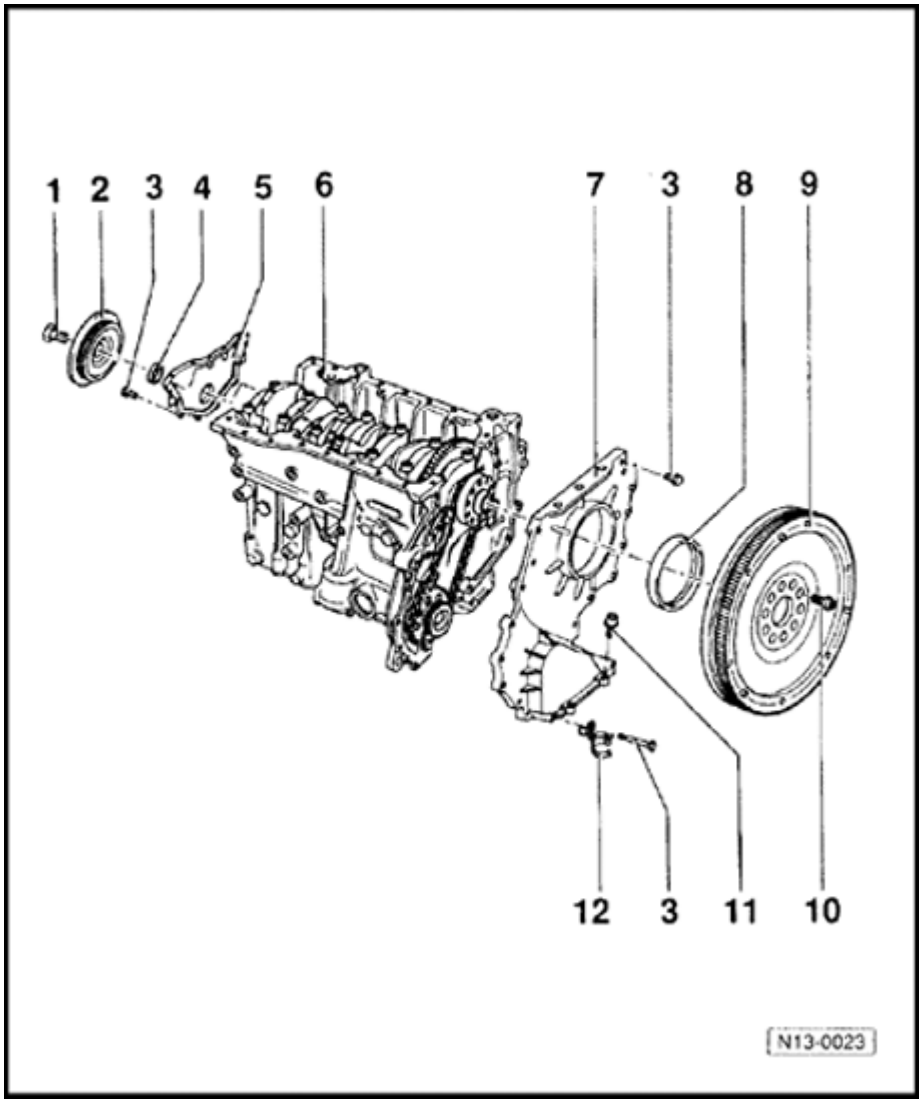

8 - Oil seal

- Remove with 2086
- Lightly oil sealing lip
- Install over sleeve 2003/2A
- Pull in onto stop with 2003/3

9 Flywheel/drive - plate

- To remove and install counter-hold with VW 558
- Removing and installing drive plate ⇒ Page 13-37

10 - 60 Nm (44 ft lb) + $^{1}/_{4}$ turn (90 °) further

- Always replace

11 - 25 Nm (18 ft lb)

12 - Bracket

- For coolant hose

13-36

Crankshaft oil seal - vibration damper end, replacing

Removing

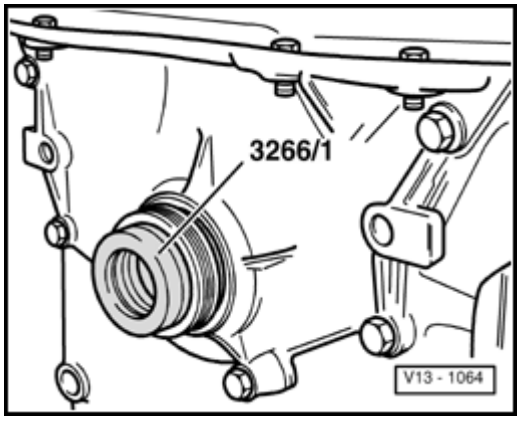

- Remove ribbed belt ⇒ Page 13-20 .
- Remove vibration damper. Lock vibration damper using tool 3273.
- Unscrew inner part of oil seal extractor 3203 three turns (approx. 4 mm) out of the outer part and lock with knurled screw.
- Lubricate threaded head of oil seal extractor, place it in position and while exerting firm pressure, screw it as far as possible into oil seal.
- Loosen knurled screw and turn inner part against crankshaft until the oil seal is pulled out.

Installing

- Lightly oil sealing lip of oil seal.
- Place guide sleeve from 3266/1 onto crankshaft journal.
- Slide oil seal over guide sleeve.

13-37

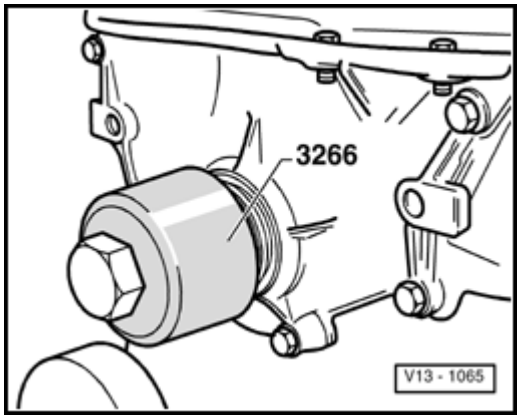

- Press in oil seal up to stop with press sleeve from 3266. To do this use an old vibration damper securing bolt.
- Install vibration damper and lock using counter-hold tool 3273.
- Tighten new securing bolt to 100 Nm (74 ft lb) and then turn $^{1}/_{4}$ turn (90 °) further.

Notes:

- *Replace securing bolt.*
- *When tightening the securing bolt the crankshaft must not turn.*

- Installing ribbed belt ⇒ Page 13-20 .

13-38

Drive plate, removing and installing

Loosening and tightening

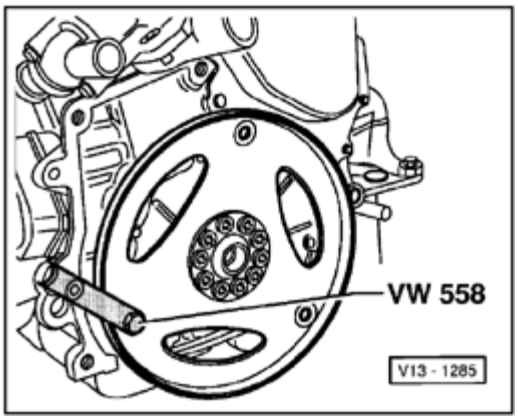

- Secure counter-hold tool VW 558 to the drive plate with a hex bolt M8x45. Place two M10 hex nuts between counter-hold tool and drive plate.

13-39

Installing

- Install drive plate to crankshaft.

- Insert at least 3 old securing bolts and tighte
  30 Nm (22 ft lb).

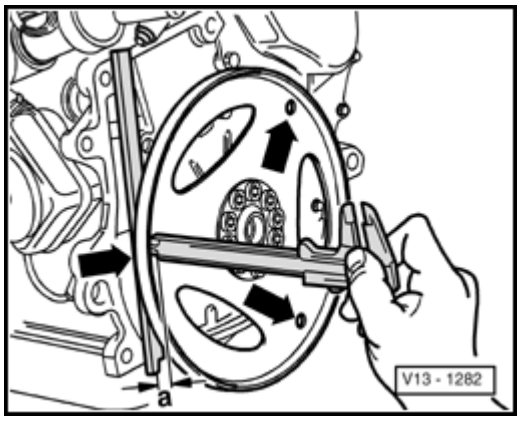

- Using a straight edge and depth gauge, che
  dimension -a- through the three holes for
  securing the torque converter and calculate t
  average.
- Compare average with specification (measu
  distance + thickness of straight edge).
  Specification: 15.7 ... 16.5 mm

If the specification is not obtained:

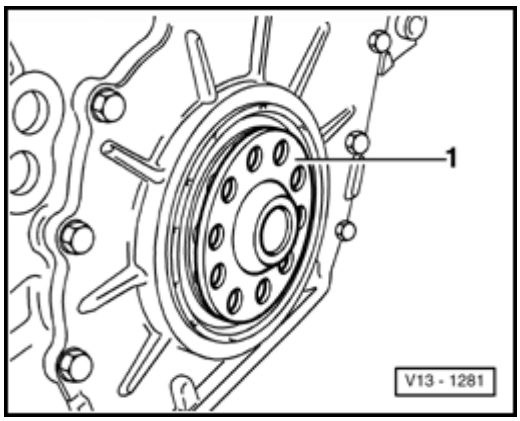

- Remove drive plate again and install approp
  shim -1-.

If the specification is obtained:

- Install drive plate using new securing bolts a
  tighten to: 60 Nm (44 ft lb) then turn $^1/_4$ turn
  (90 °) further.

13-40

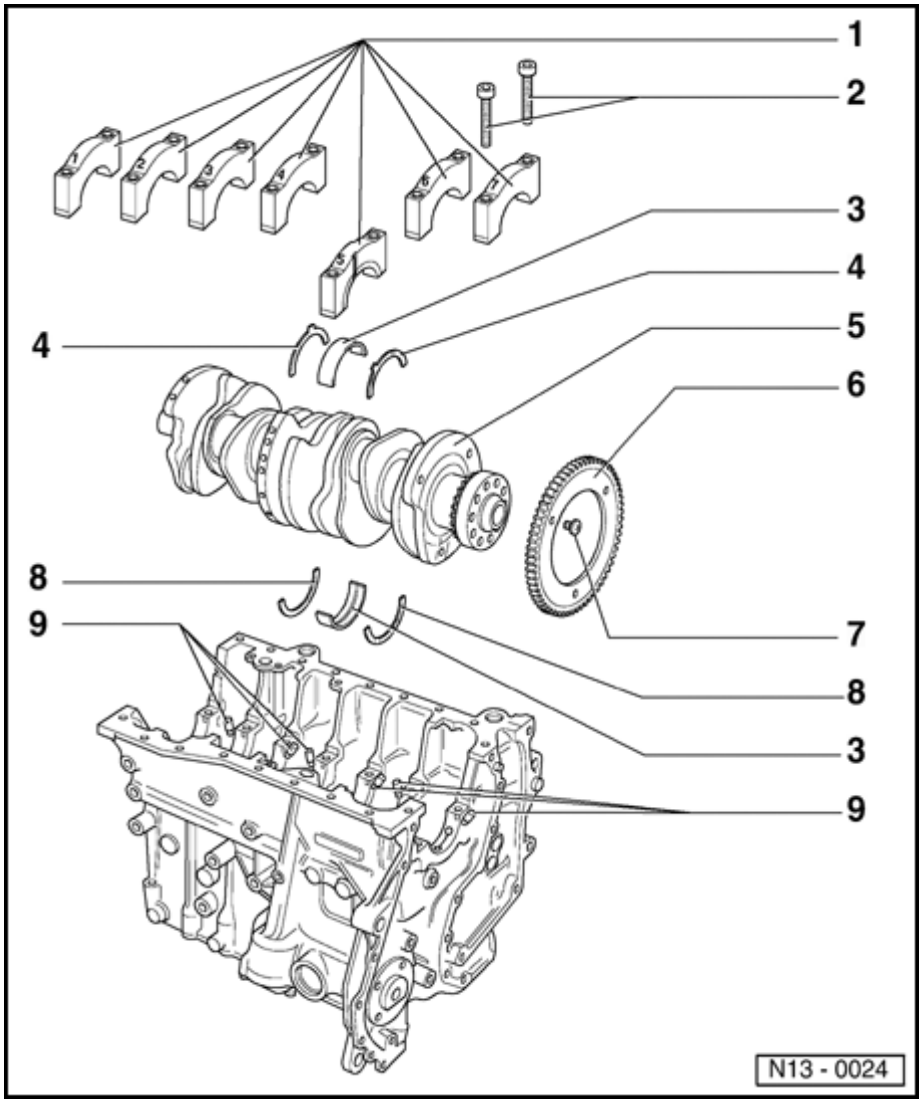

Crankshaft, removing and installing

1 - Bearing cap

- Bearing cap 1: Vibration damper end
- Bearing cap 5 with recesses for thrust washers

- Bearing shell retaining lugs cylinder block/bearing cap must be on the same side

2 - 30 Nm (22 ft lb) + $^{1}/_{2}$ turn (180 °) further

- Always replace
- two 90 ° additional turns is permitted

3 - Bearing shells 1 ... 7

- For bearing cap

without oil groove

- For cylinder block with oil groove

- Do not interchange used bearing shells (mark)

13-41

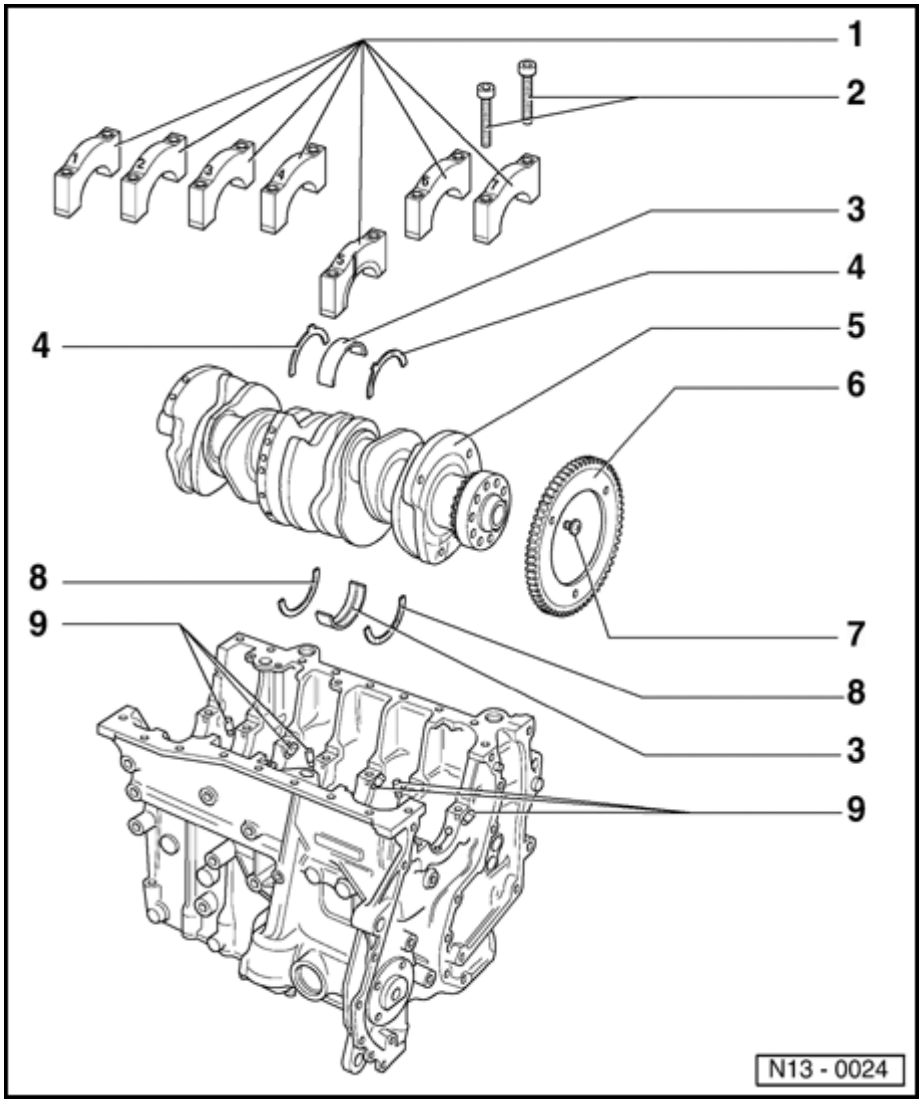

4 - Thrust washer

- For bearing cap 5
- Note orientation

5 - Crankshaft

- Axial clearance new: 0.07...0.23 mm Wear limit: 0.30 mm
- Check radial clearance with Plastigage

New: 0.02...0.06 mm

Wear limit: 0.10 mm

- Do not rotate the crankshaft when checking the radial clearance
- Crankshaft dimensions main bearing:

59.958 ...59.978 mm connecting rod bearing:

53.958 ... 53.978 mm

rework is not permitted

6 - Trigger wheel

- For Engine Speed sensor - G28-
- Always replace

7 - 10 Nm (7 ft lb) + $^{1}/_{4}$ turn 90 ° further

- Always replace

13-42

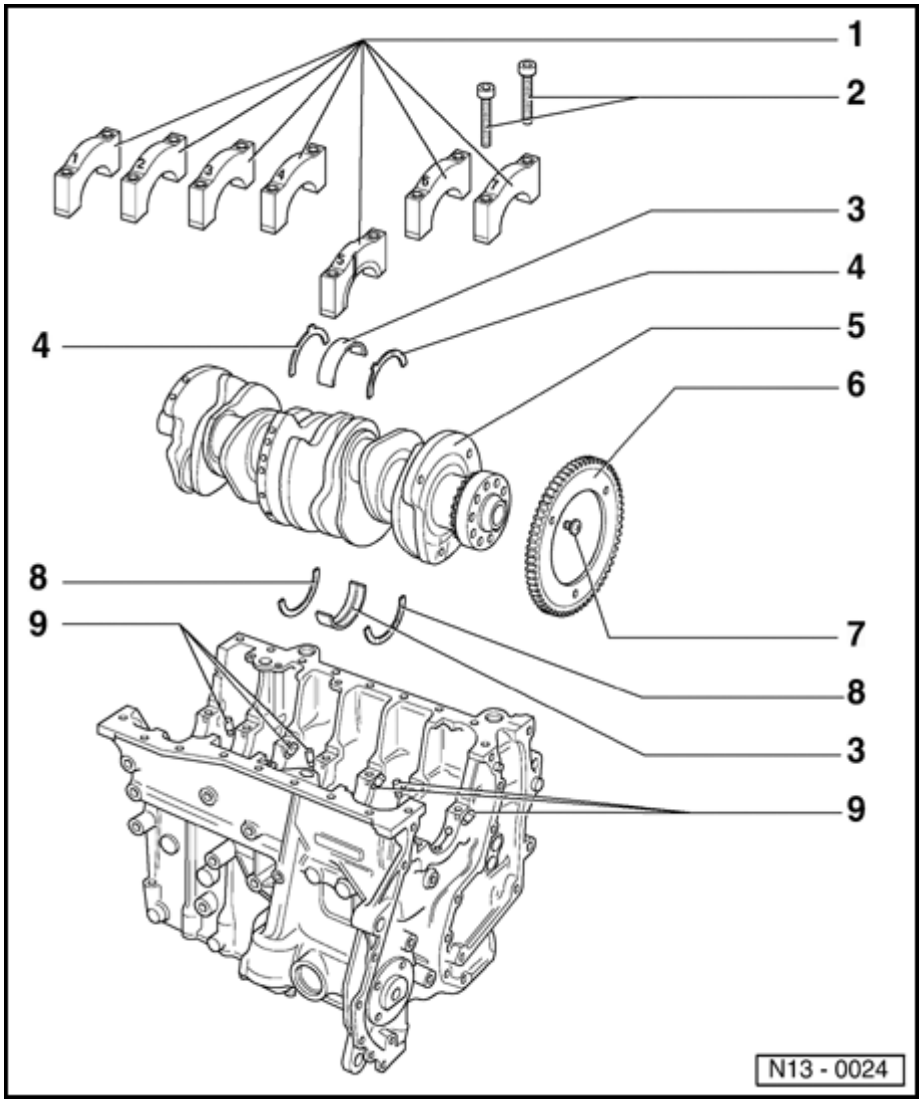

8 - Thrust washer

- For cylinder block, bearing 5

- Note fixing arrangement

9 - Oil spray jet

- For crankshaft bearings 2...7
- For piston cooling
- Opening pressure: 2.0 bar
- Removing and installing ⇒ Page 17-7 , ⇒ Fig. 1
- See note ⇒ Page 13-1

13-43

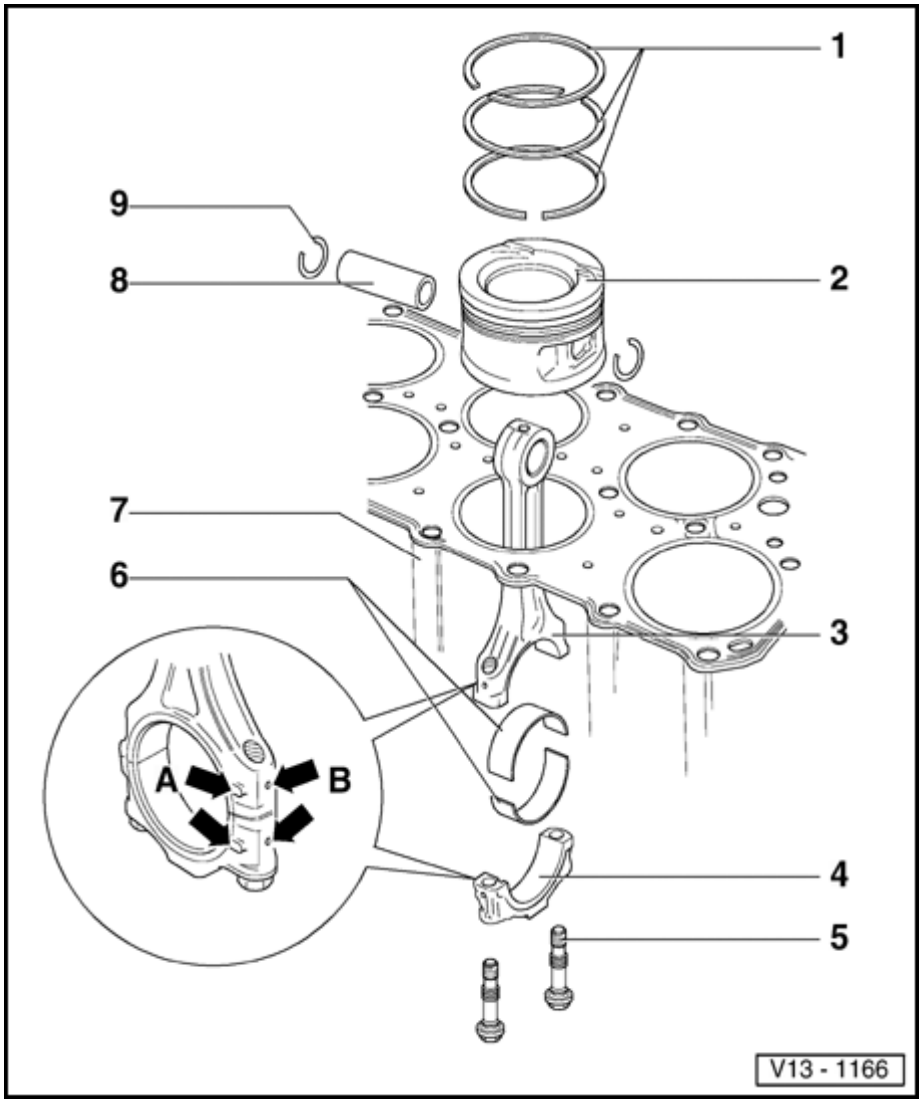

Pistons and connecting rods, disassembling and assembling

1 - Piston ring

- Offset gaps by 120 °
- Remove and install with piston ring pliers
- "TOP" faces toward piston crown
- Checking ring gap ⇒ Fig. 1
- Checking ring to groove clearance ⇒ Fig. 2

2 - Piston

- Checking ⇒ Fig. 3
- Mark installation position on connecting rod and

cylinder number

- High point of piston crown faces to center of engine block
- Install with piston installing tool 3278 ⇒ Fig. 5

13-44

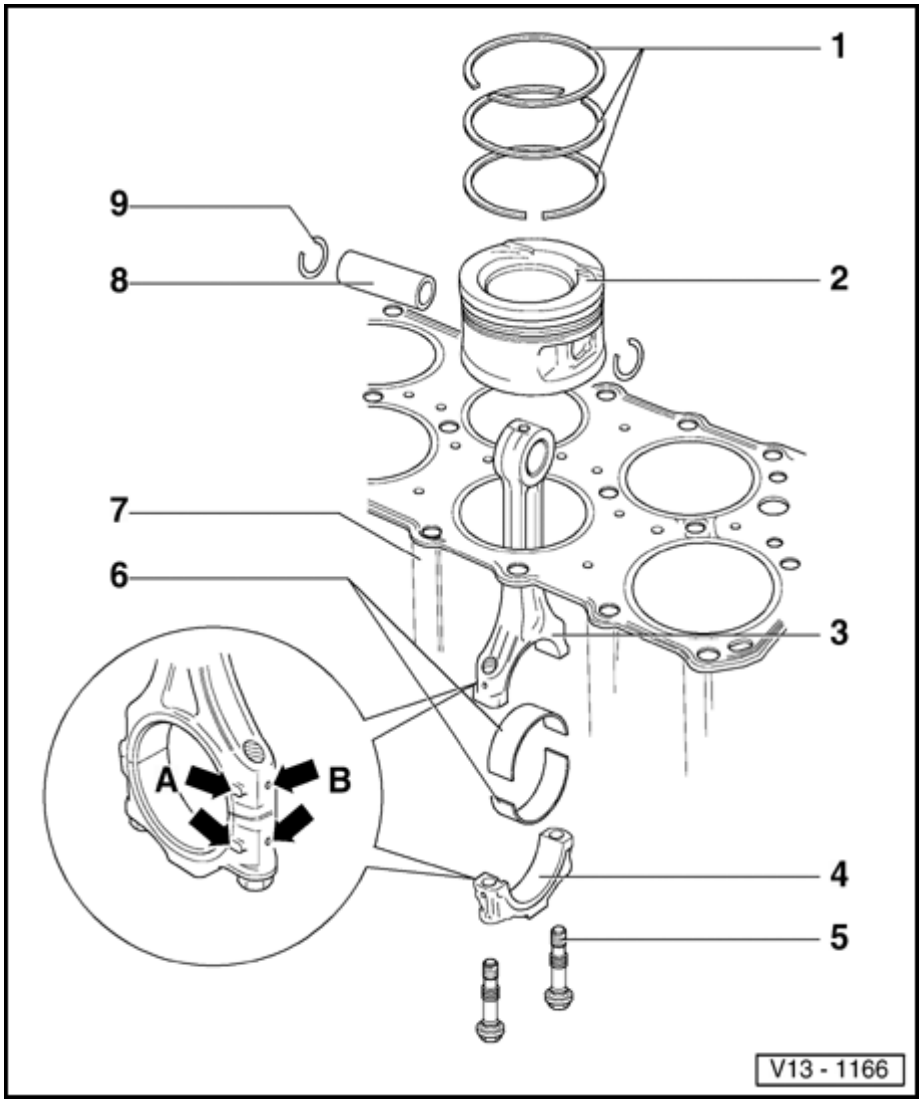

3 - Connecting rod

- Only replace as a set
- Mark cylinder number -B-
- Installation position: Marks -A- must be above one another

4 - Conrod bearing cap

- Note installation position

5 - 30 Nm (22 ft lb) + $^1/_4$ turn 90 ° further

- Always replace
- Oil threads and contact surface
- To measure radial clearance tighten to 30 Nm (22 ft lb) but not

further

13-45

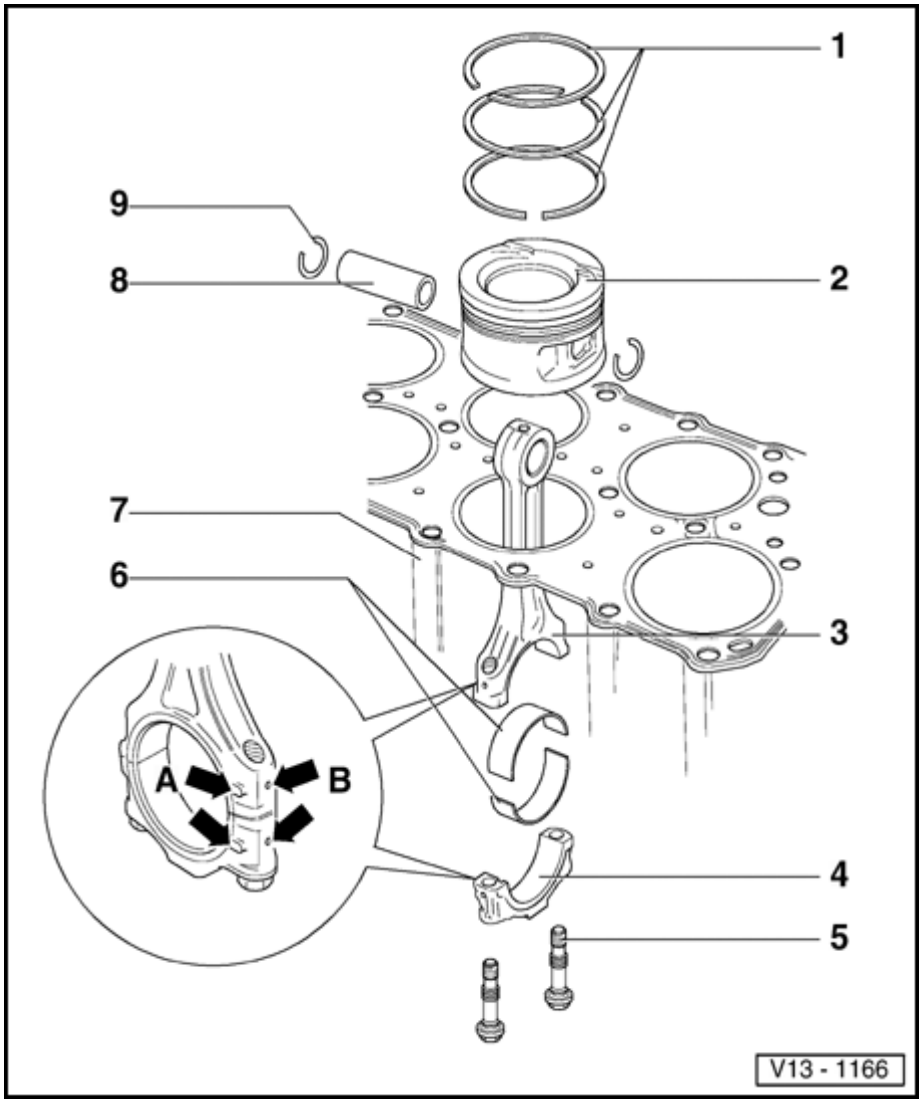

6 - Bearing shell

- Note installation position
- Do not interchange used bearing shells
  - The lugs on the bearing shells must fit tightly in the recesses
  - Axial clearance

  New: 0.05...0.31 mm

  Wear limit: 0.40 mm
- Check radial clearance with Plastigage @):

  New: 0.01...0.06 mm

  Wear limit: 0.10 mm

  Do not rotate crankshaft when

checking radial clearance

7 - Cylinder block

- Checking cylinder bores ⇒ Fig. 4
- Piston and cylinder dimensions ⇒ Page 13-50

13-46

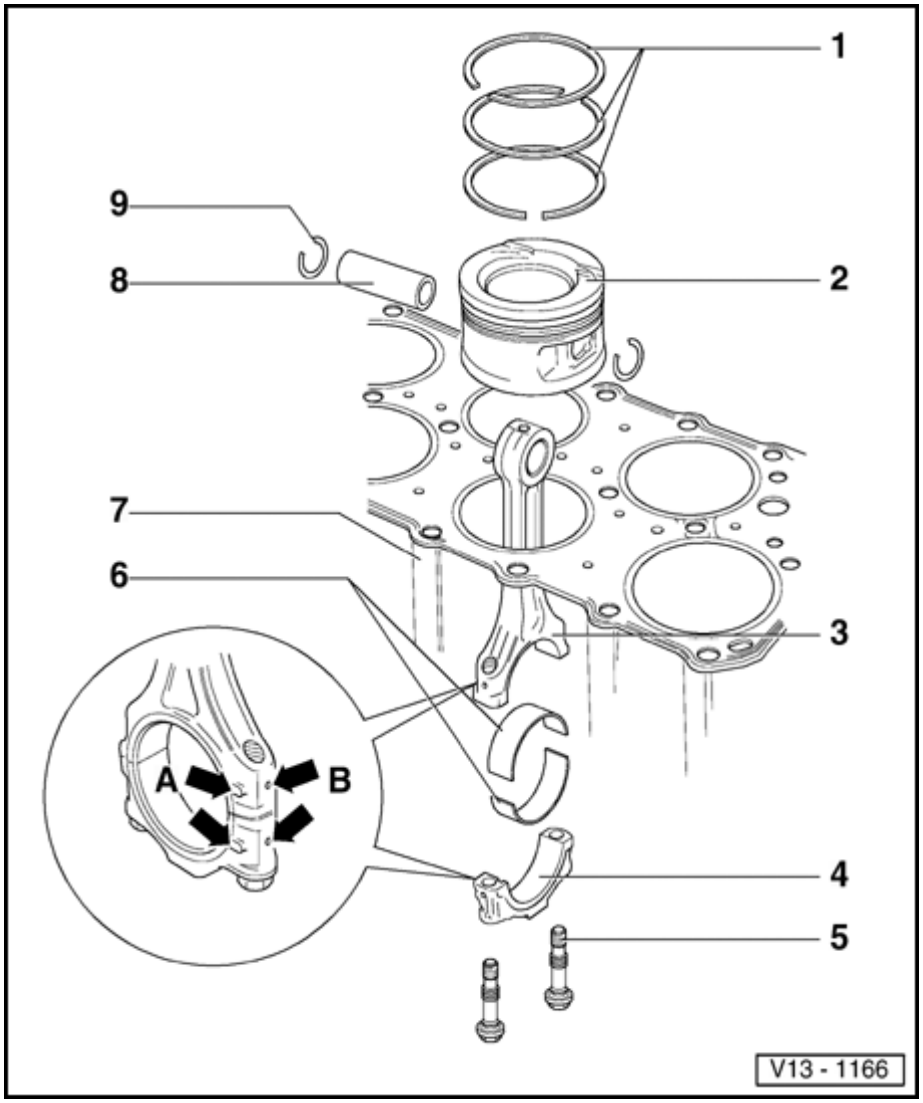

8 - Piston pin

- If difficult to remove, heat piston to 60 ° C
- Remove and install with VW 222A

9 - Circlip

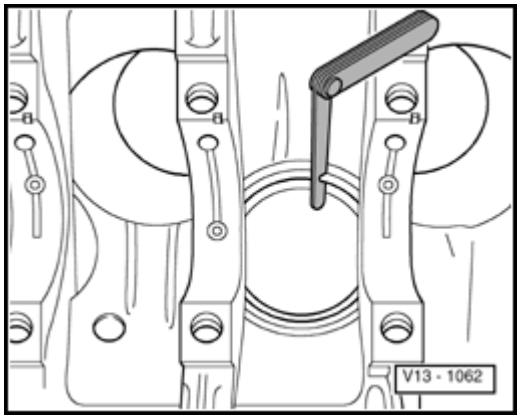

Fig. 1 Checking piston ring gap

- Push ring squarely from above down to approx. 15 mm from bottom end of cylinder. To do this use a piston without rings.

Piston ring	Gap	
	New	Wear limit
Compression rings mm	0.20...0.40	1.0
Oil scraper ring mm	0.25...0.50	1.0

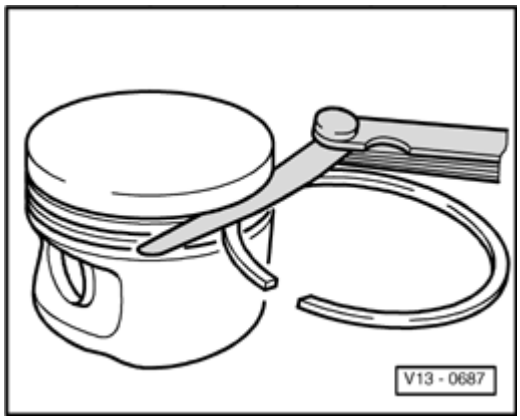

Fig. 2 Checking ring to groove clearance

- Clean groove before checking.

Piston ring	Clearance	
	New	Wear limit
Compression rings mm	0.02...0.07	0.15
Oil scraper ring mm	0.02...0.06	0.15

13-48

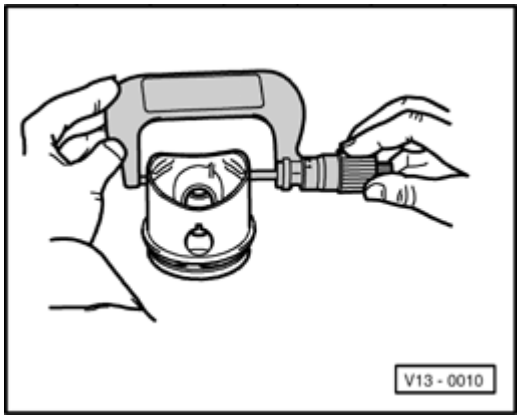

Fig. 3 Checking piston

Measure pistons approx. 6 mm from the lower edge of skirt, at 90 ° to the piston pin axis

Deviation from nominal dimension max. 0.04 mm

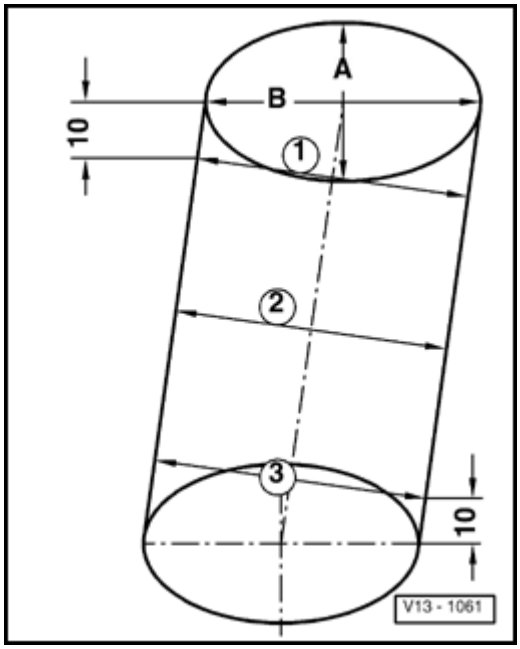

Fig. 4 Checking cylinder bores

- Measure bores at 3 locations in both directions -A- across the engine and -B- in line with crankshaft.
- Use inside dial gauge 50...100 mm.
- Deviation from nominal dimension max. 0.08 mm

Note:

Do not measure the cylinder bores when the cylinder block is mounted on a repair stand with adapter bracket 3269, as incorrect measurements would be possible.

13-49

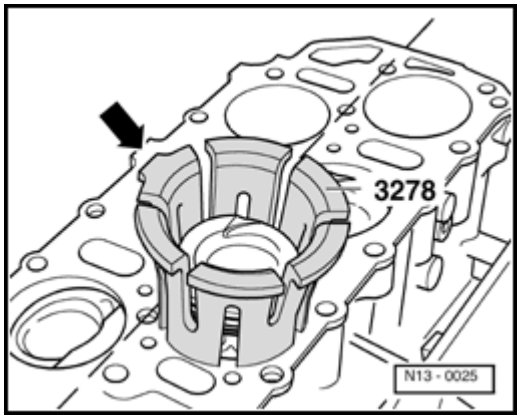

Fig. 5 Installing pistons with piston installion tool 3278

Note:

If a new tool is used to install the pistons, first pass a piston with oiled piston rings two times through the tool and then remove the metal shavings. Only install piston with piston rings.

- Oil tool and push piston in. High point of the piston crown must face toward lug on the tool -arrow-.
- Push piston in until it protrudes approx. 15 mm from the lower edge of the installation tool.
- Place piston in appropriate cylinder bore. Lug on tool -arrow- must face toward center of cylinder block.
- Hold installation tool tight against cylinder block and push piston in.

13-50

Piston and cylinder dimensions

Honing dimension		Piston-diameter	Cylinder bore-diameter
Basic dimen.	mm	80.985	81.01
1st oversize	mm	81.485	81.51
2nd oversize	mm	81.985	82.01

15-1

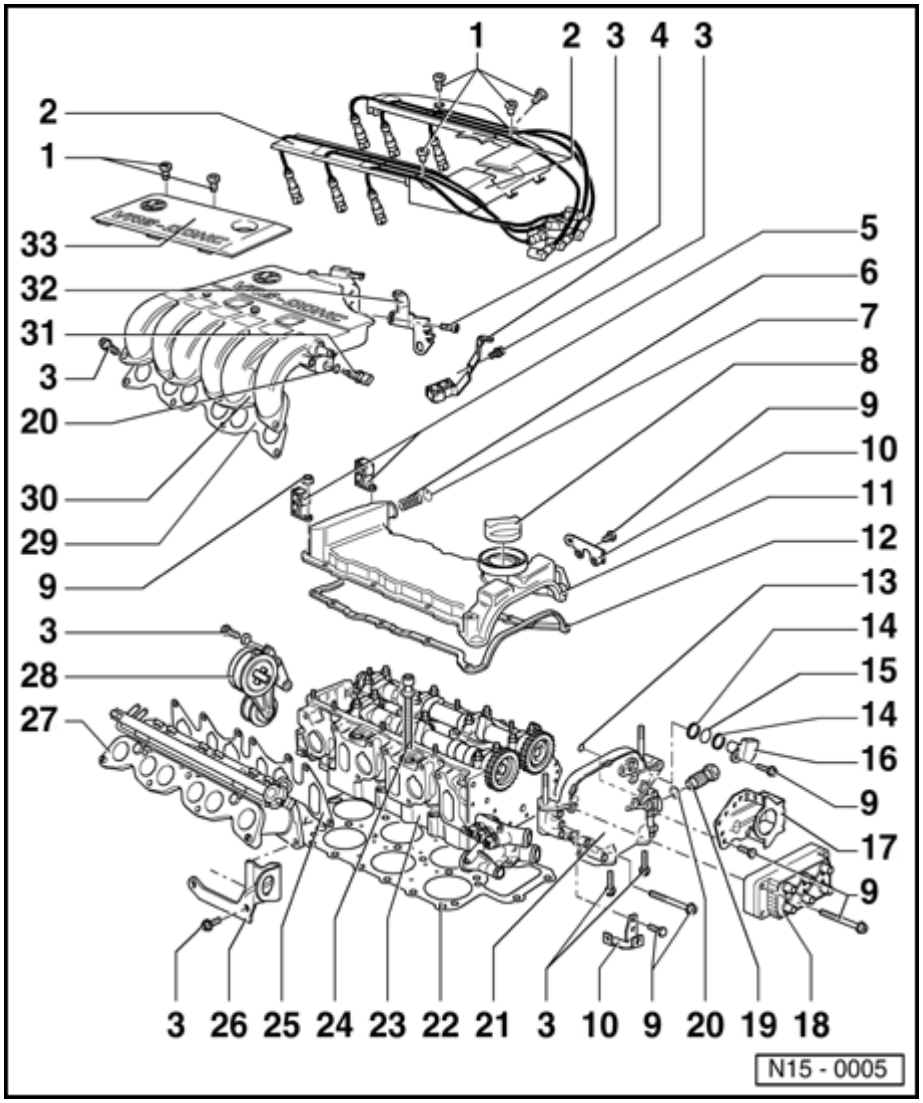

Cylinder head, removing and installing

Checking compression ⇒ Page 15-12

Note:

- *When installing an exchange cylinder head with camshaft installed, oil the contact surfaces between the hydraulic lifter and cam after installation.*
- *The plastic protectors installed to protect the open valves must be removed immediately before installing the cylinder head.*
- *If the cylinder head is replaced, the entire engine coolant must be replaced with new coolant.*

1 - 5 Nm (44 in. lb)

15-2

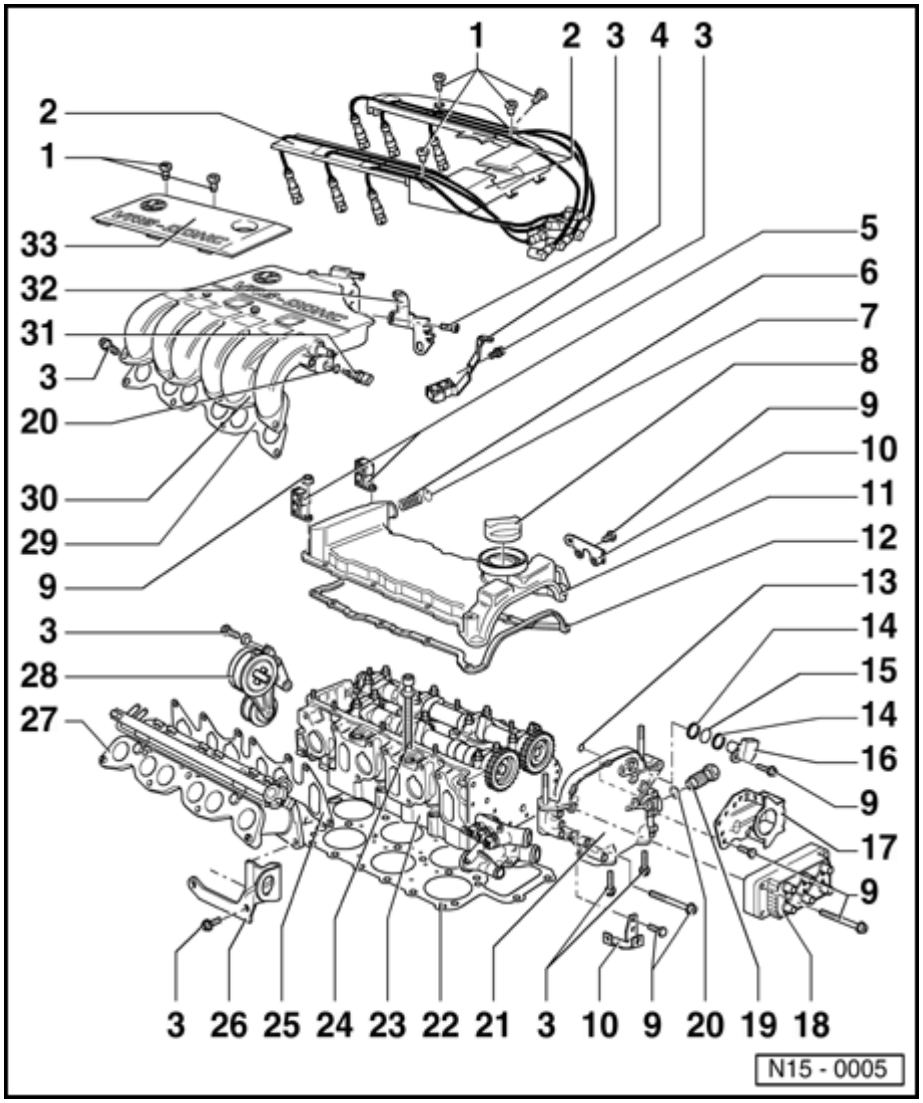

2 - Ignition wire guide

3 - 25 Nm (18 ft lb)

4 - Right rear support

- Between intake manifold upper section and cylinder head
- With bracket for fuel lines

5 - Bracket

- For fuel lines

6 - Flame trap coil

7 - Circlip

8 - Cap

- Replace seal if damaged

9 - 10 Nm (7 ft lb)

10 - Bracket

- For electric wires

15-3

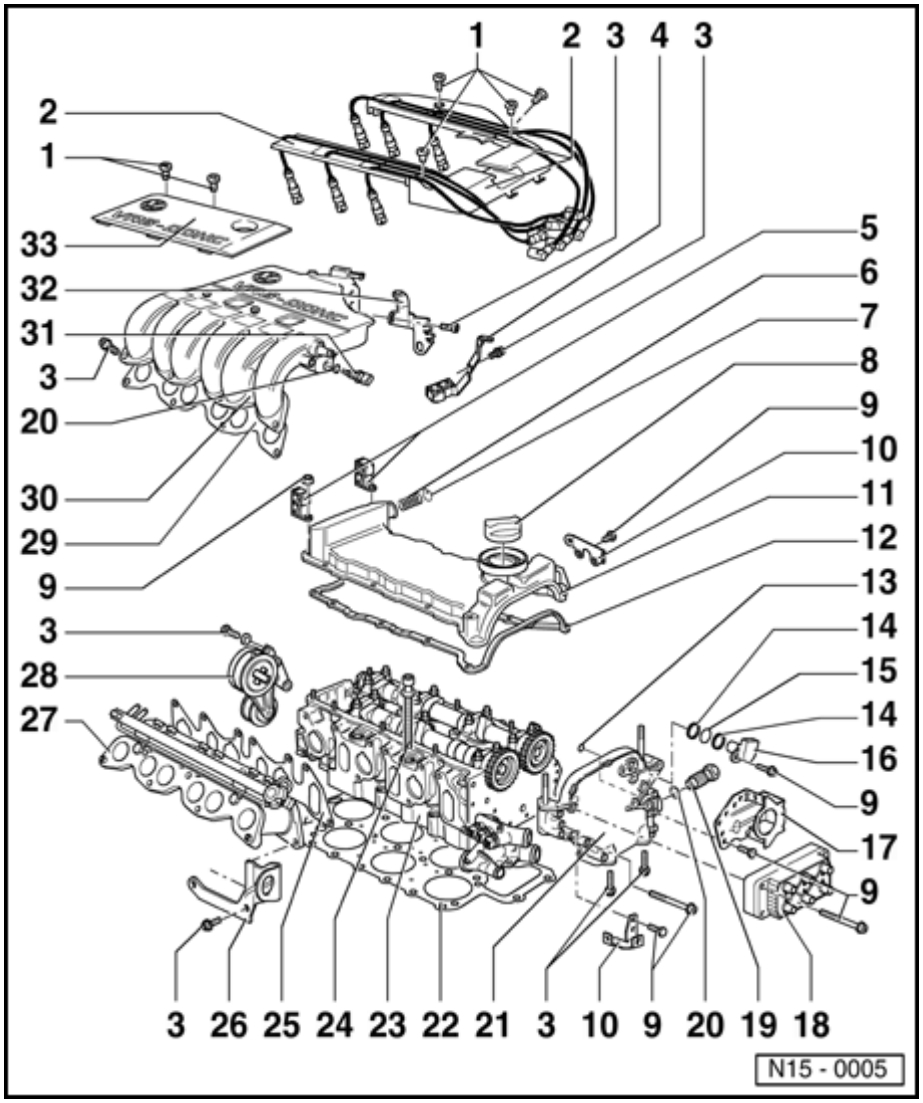

11 - 12Cylinder head cover

- Removing and installing ⇒ Page 15-9

13 - Cylinder head cover gasket

- Always replace
- Note installed position

14 - O-Ring

- Always replace
- Lubricate before installing and insert in the camshaft sprocket cover (item 21)

15 - Spacer ring

16 - O-Ring

- Always replace
- Lubricate before installing

17 - Camshaft

Position sensor - G40-

- Checking

15-4

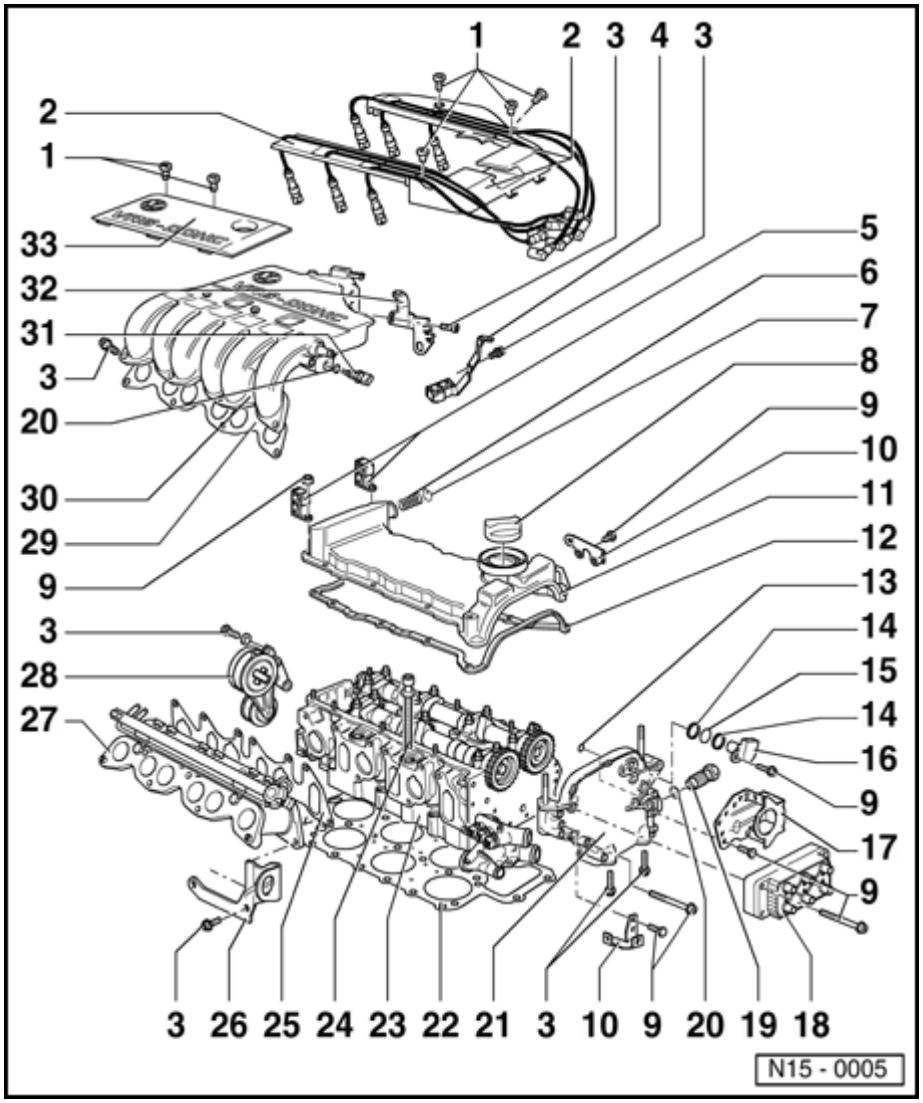

18 - Bracket

- For 42-pin connector and pump for auxiliary coolant circulation

19 - Ignition coil -N152-

- Checking

20 - Chain tensioner

- 30 Nm (22 ft lb)
- For double chain
- Bleed before installing ⇒ Page 13-7 , ⇒ Fig. 2
- Only turn engine with chain tensioner installed

21 - Seal

- Always replace

22 - Camshaft sprocket cover

- Coat sealing

surfaces with AMV 188 001 02

- If the camshaft sprocket cover has been removed, prepare cylinder head gasket for assembly ⇒ Fig. 2

15-5

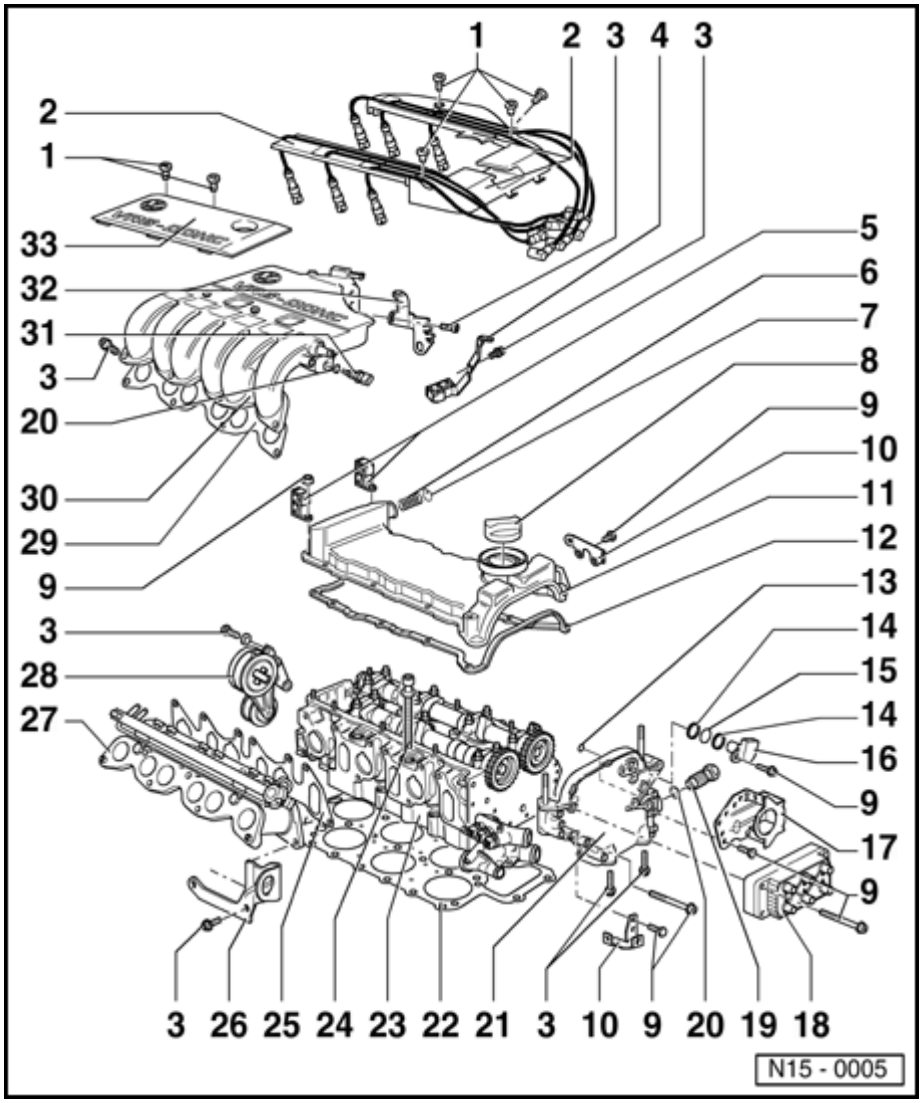

23 - Cylinder head gasket

- Always replace
- If replaced, replace the complete coolant

24 - Cylinder head

- Check for distortion ⇒ Fig. 1
- Installing ⇒ Page 15-11
- If replaced, the entire engine coolant must be replaced with new coolant.

25 - Cylinder head bolt

- Always replace
- Note sequence when loosening and tightening ⇒ Page 15-11

26 - Intake manifold lower section gasket

- Always replace

27 - Lifting eye

15-6

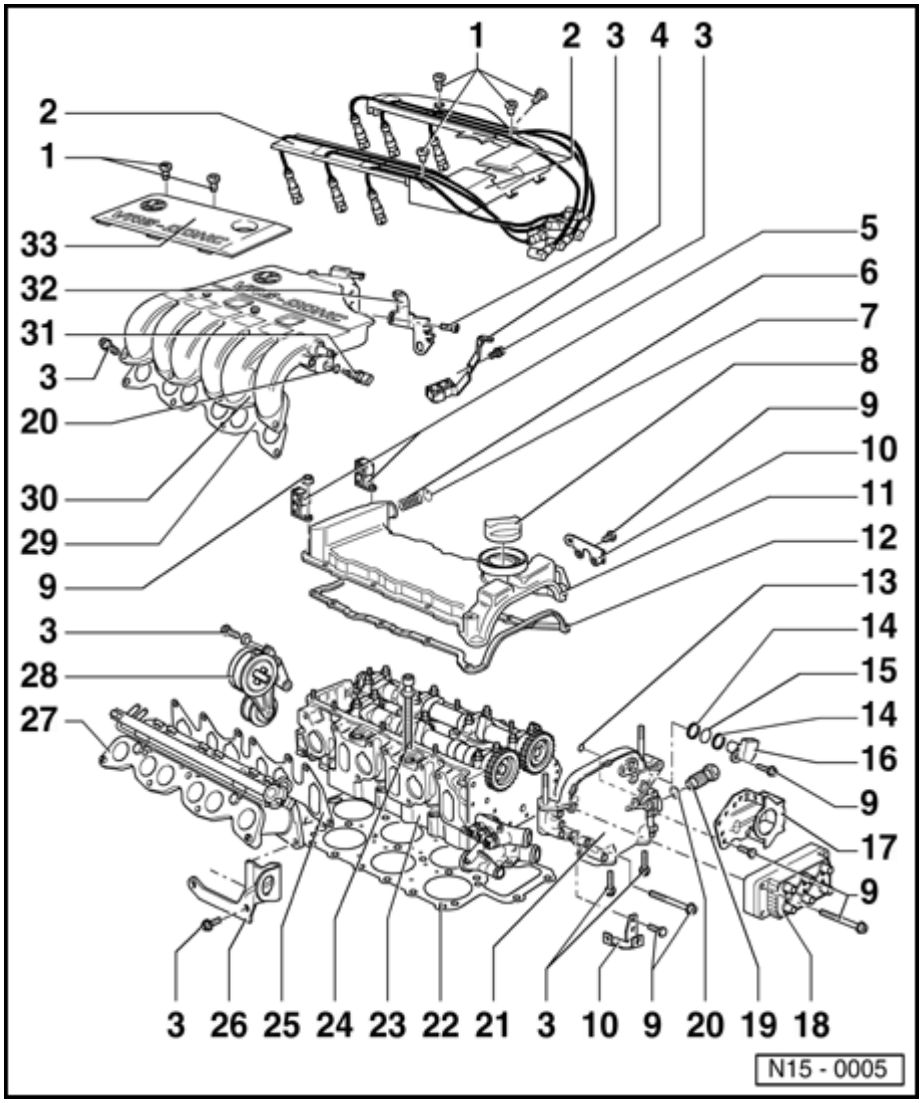

28 - Intake manifold - lower section

29 - Ribbed belt tensioner

- Removing and installing ribbed belt ⇒ Page 13-20

30 - Intake manifold upper section gasket

- Always replace

31 - Intake manifold upper section

- First tighten to intake manifold lower section, then tighten both rear supports, items 4 and 32

32 Intake Air - Temperature sensor - G72-,

- 10 Nm (7 ft lb)
- Checking

15-7

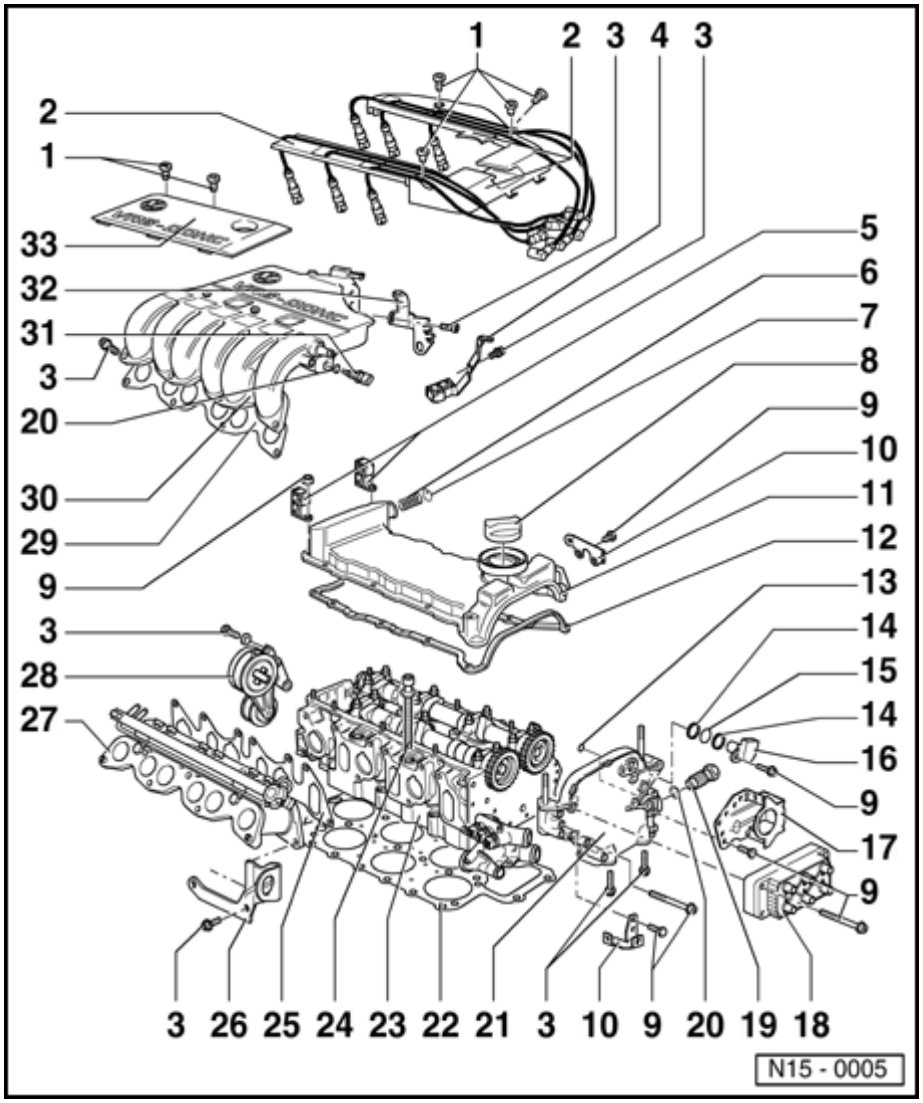

33 - Left rear support

- Between intake manifold upper section and cylinder head
- With engine ground connection

34 - Cover

- Above intake manifold upper section

15-8

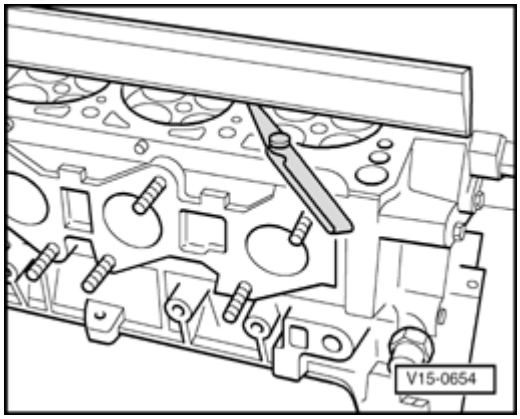

Fig. 1 Checking cylinder head for distortion

Max. permissible distortion: 0.1 mm

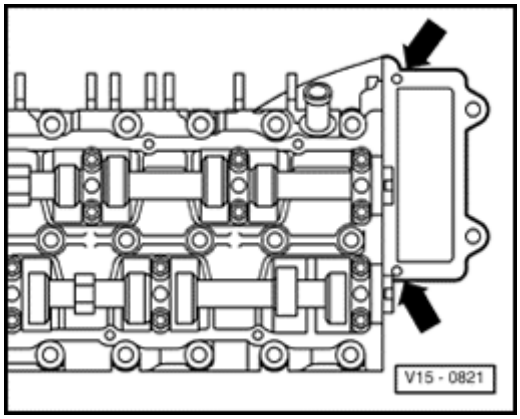

Fig. 2 Preparing cylinder head gasket for assembly

- Remove old sealant from 3 mm holes in the cylinder head gasket-arrows-.
- Fill 3 mm holes in the cylinder head gasket with sealant AMV 188 001 02

Note:

With the cylinder head installed the holes are only half visible.

15-9

Cylinder head cover, removing and installing

Removing

⇒ *Repair Manual, 2.8 Liter VR6 2V Fuel Injection & Ignition, Repair Group 28; Remove spark plug connectors along with ignition wires*

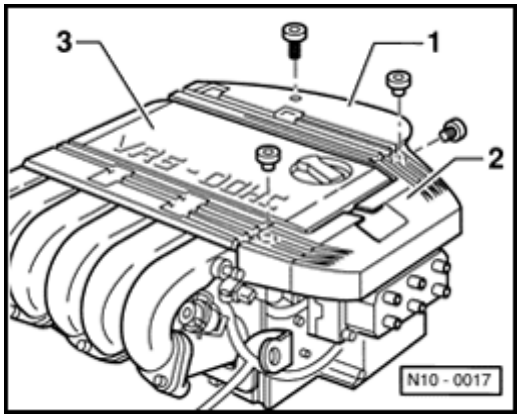

- Remove ignition wire guides -1- and -2-.
- Remove cover above intake manifold upper section -3-.
- Disconnect crankcase breather valve off of cylinder head cover and breather hose to EVAP canister purge regulator valve from intake manifold upper section.
- Remove intake hose from throttle body.
- Disconnect connectors off throttle position sensor, heater element, Idle Air Control valve and Intake Air Temperature sensor.
- Detach accelerator cable from throttle body and support bracket (do not remove locating clip).
- Remove coolant hose off throttle body and plug off (first release pressure from cooling system).

- Remove vacuum hose off fuel pressure regulator.

- Remove vacuum hose off brake servo.

- Unclip fuel lines from cylinder head cover.

- Detach dipstick guide tube on intake manifold lower section.

- Remove intake manifold upper section (with throttle body).

Note:

Seal off intake ports with clean cloth.

- Remove cylinder head cover.

Installing

Install in reverse order

Note:

- *Replace cylinder head cover and intake manifold upper section gaskets.*

- *First secure intake manifold upper section to intake manifold lower section, then the two rear supports (⇒ Page 15-2 , items 4 and 32).*

- Adjust accelerator cable ⇒ Page 20-11

- If necessary top off coolant ⇒ Page 19-13

15-11

Cylinder head, installing

- No. 1 Cyl. piston at TDC ⇒ Page 13-21

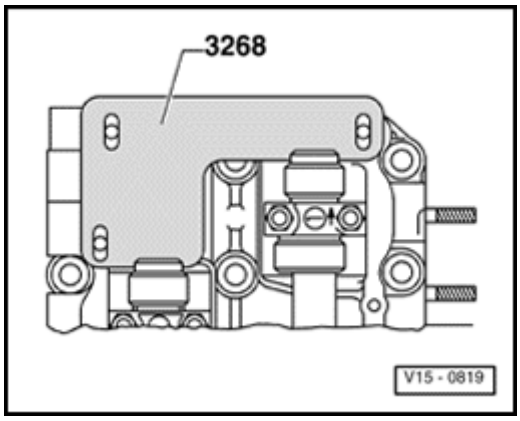

- Locate camshafts using camshaft jig 3268.
- Install cylinder head gasket. Observe position of locating dowels in cylinder block (hole 12 and 20, ⇒illustration V15-0817).
- Place cylinder head on engine block.
- Insert cylinder head bolts and hand-tighten.
- Tighten cylinder head in four stages in the sequence shown as follows:

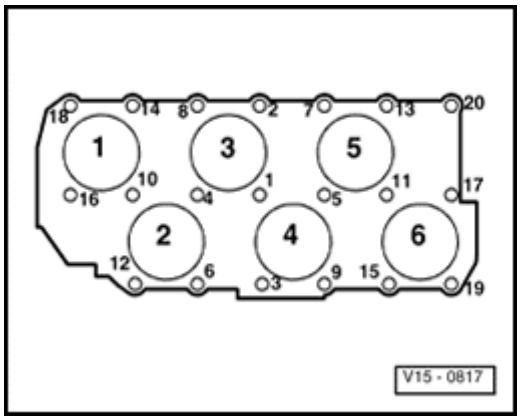

1 - Tighten initially with torque wrench:

Stage I = 40 Nm (30 ft lb)

Stage II = 60 Nm (44 ft lb)

2 - Turn further with normal wrench:

Stage III = $^1/_4$ turn (90 °)

Stage IV = $^1/_4$ turn (90 °)

Note:

- *Loosening cylinder head: Reverse sequence.*
- *Re-torquing cylinder head after repairs is not necessary.*

15-12

Compression testing

- Engine oil temperature 30 °C (86 °F) minimum.

- Disconnect 5 pin harness connector from ignition coil -N152-.

- Fully open throttle body.

- Check compression using compression tester V.A.G 1381 / V.A.G 1763.

Note:

See operating instructions for using the compression tester that are supplied by the tool manufacturer.

- Crank starter until tester shows no additional increase in pressure.

Compression pressure:

New: 10...13 bar

Wear limit: 7.5 bar

Permissible difference between all cylinders: 3 bar

15-13

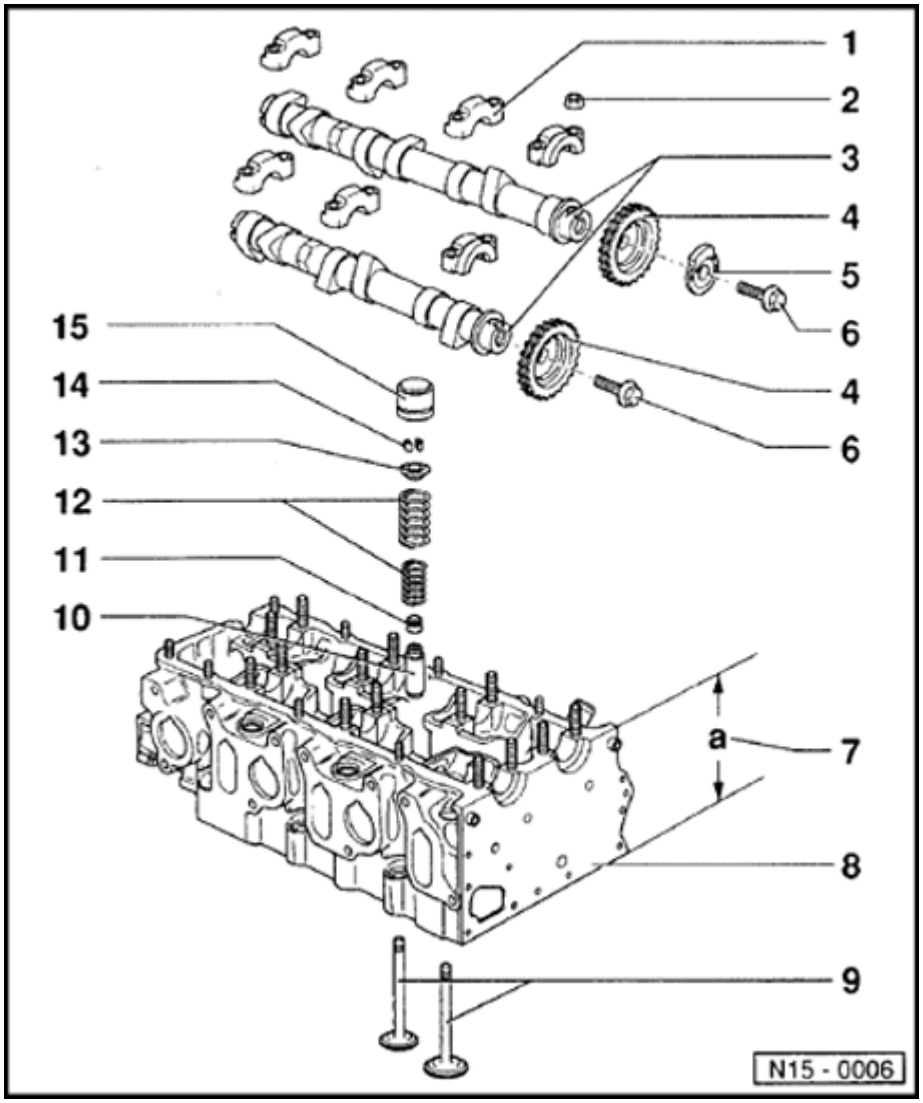

Valve train, servicing

Note:

Cylinder heads which have cracks between the valve seats or between valve seat inserts, and the spark plug thread can be used without reducing service life, provided the cracks do not exceed a maximum of 0.5 mm in width.

1 - Bearing cap

- Installation position ⇒ Fig. 2
- Installation sequence ⇒ Page 15-23

2 - 20 Nm (15 ft lb)

15-14

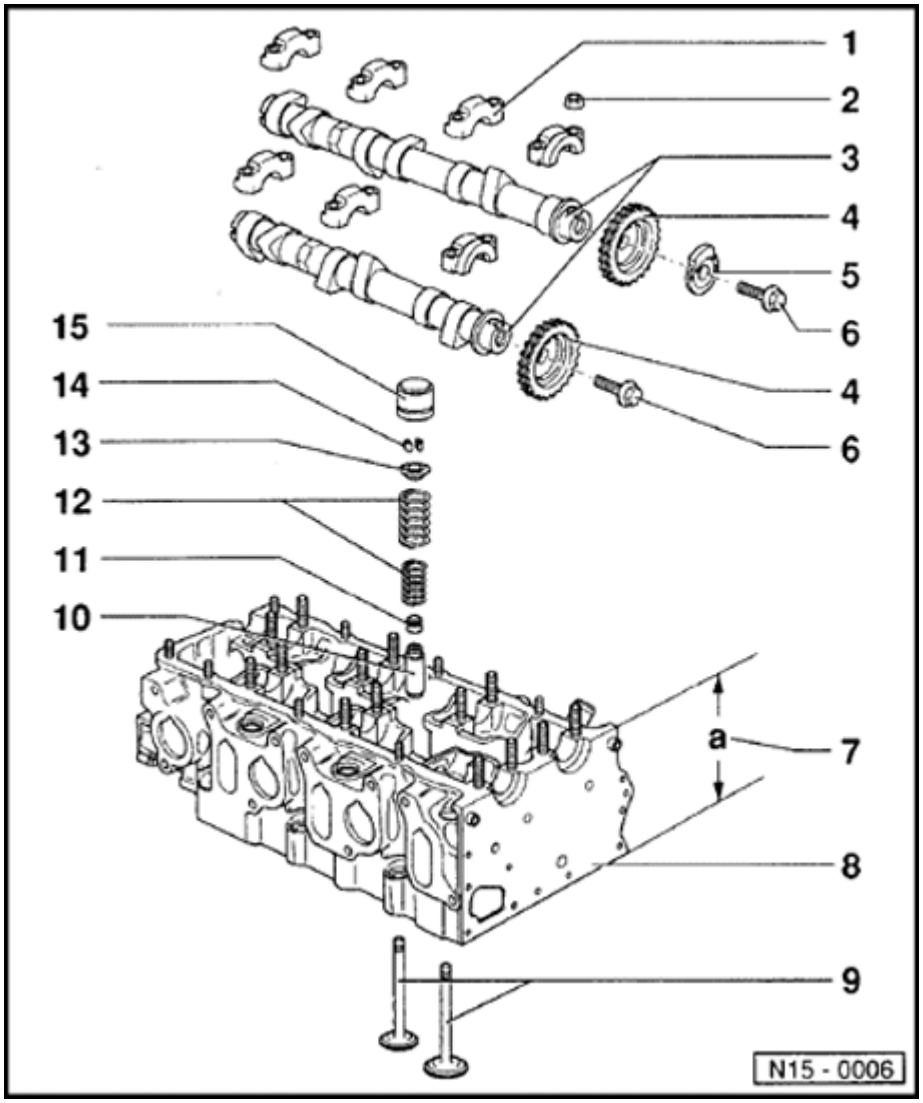

3 - Camshafts

- Checking axial clearance ⇒ Fig. 1
- Removing and installing ⇒ Page 15-23
- Checking radial clearance with Plastigage ®

  Wear limit: 0.1 mm
- Run-out: max. 0.01 mm

4 - Camshaft sprocket

- Removing and installing ⇒ Page 15-23

5 - Trigger wheel

- For Camshaft Position sensor - G40-
- When installing, contact surfaces on timing

chain and trigger wheel must be dry

- Removing and installing ⇒ Page 15-23

15-15

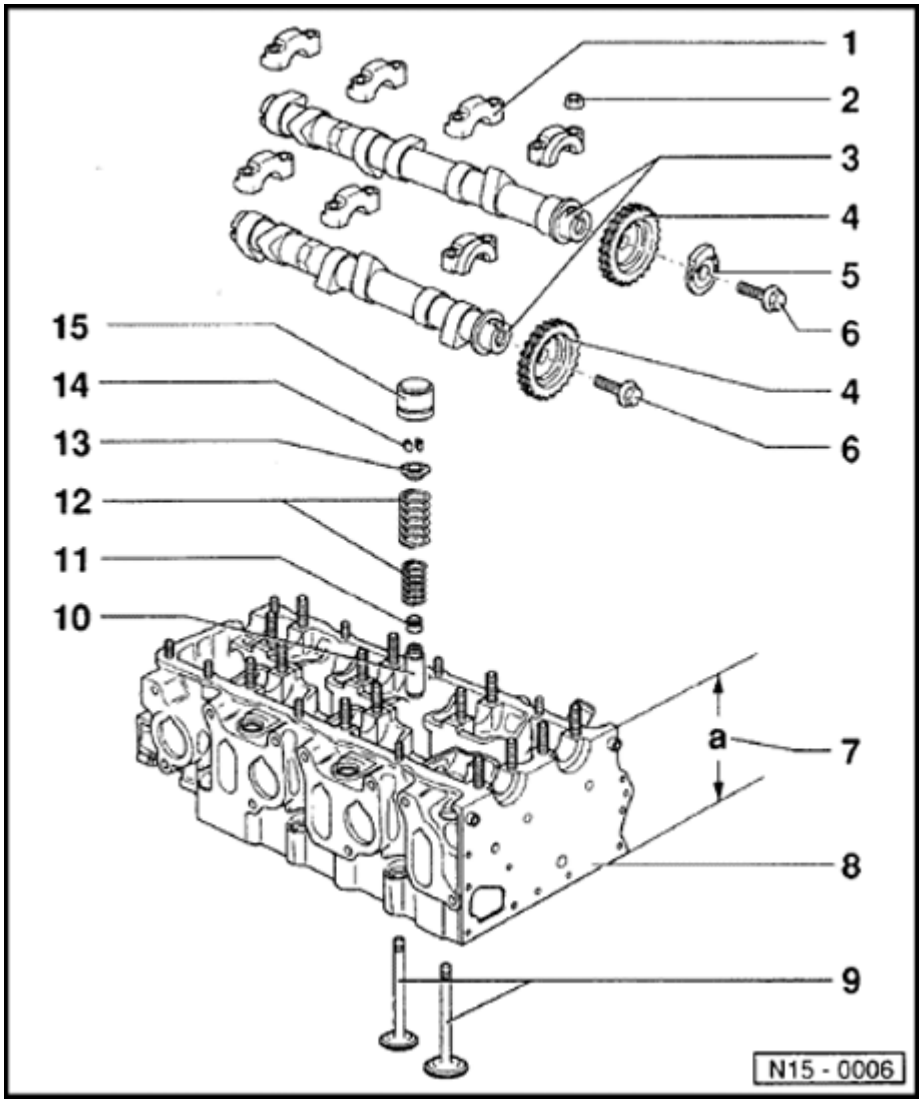

6 - 7100 Nm (74 ft lb)

- To remove and install counter-hold with 24 mm open end wrench on camshaft ⇒ Page 15-23
- When installing oil bulkhead contact surface

8 - Cylinder head deck height

- Minimum height: a = 139.5 mm

9 - Cylinder head

- See note ⇒ Page 15-13
- Reworking valve seats ⇒ Page 15-20

10 - Valves

- Do not rework,

only lapping is permitted

- Valve dimensions ⇒ Fig. 3

15-16

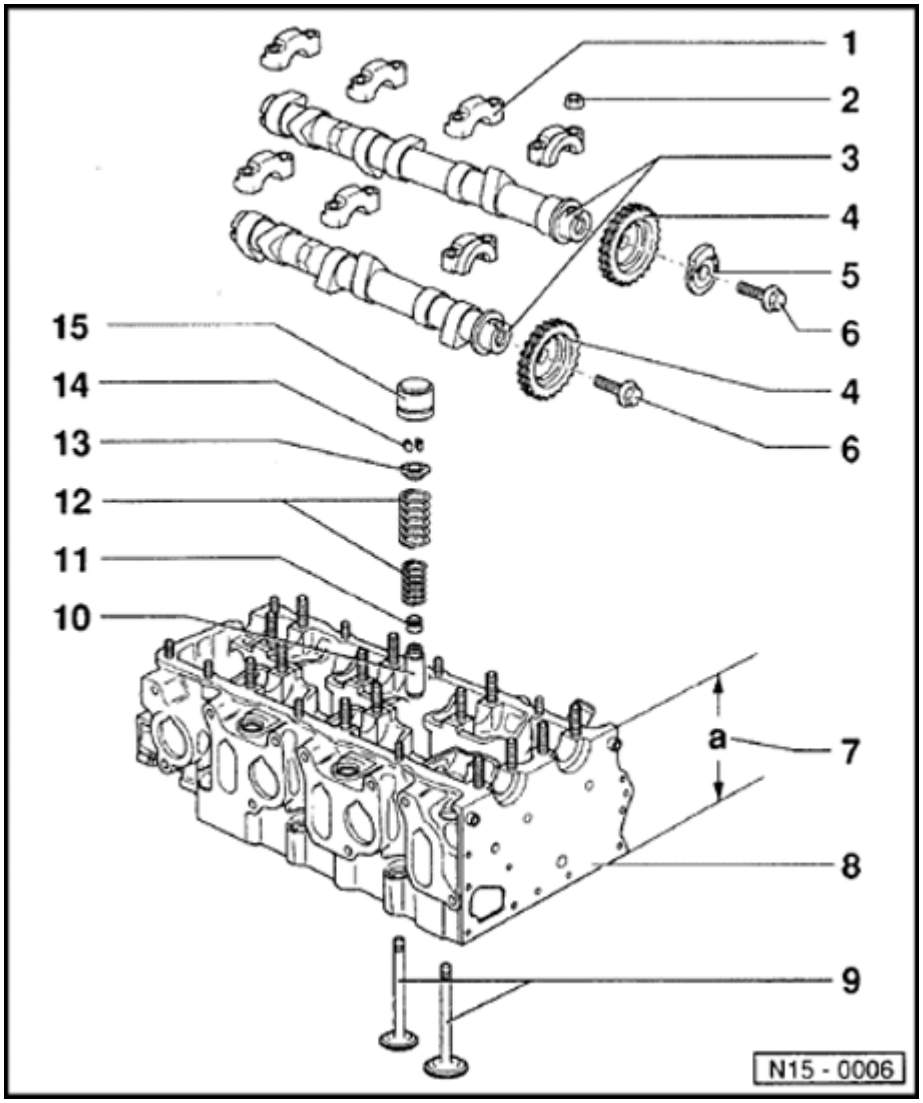

11 - Valve guide

- Checking ⇒ Page 15-29
- Replacing ⇒ Page 15-29
- Service version with collar

12 - Valve stem seal

- Replacing ⇒ Page 15-30

13 - 12-Valve springs

- Removing and installing: With cylinder head removed: use 2037 With cylinder head installed: ⇒ Page 15-30

14 - Valve spring plate

15 - Valve keepers

15-17

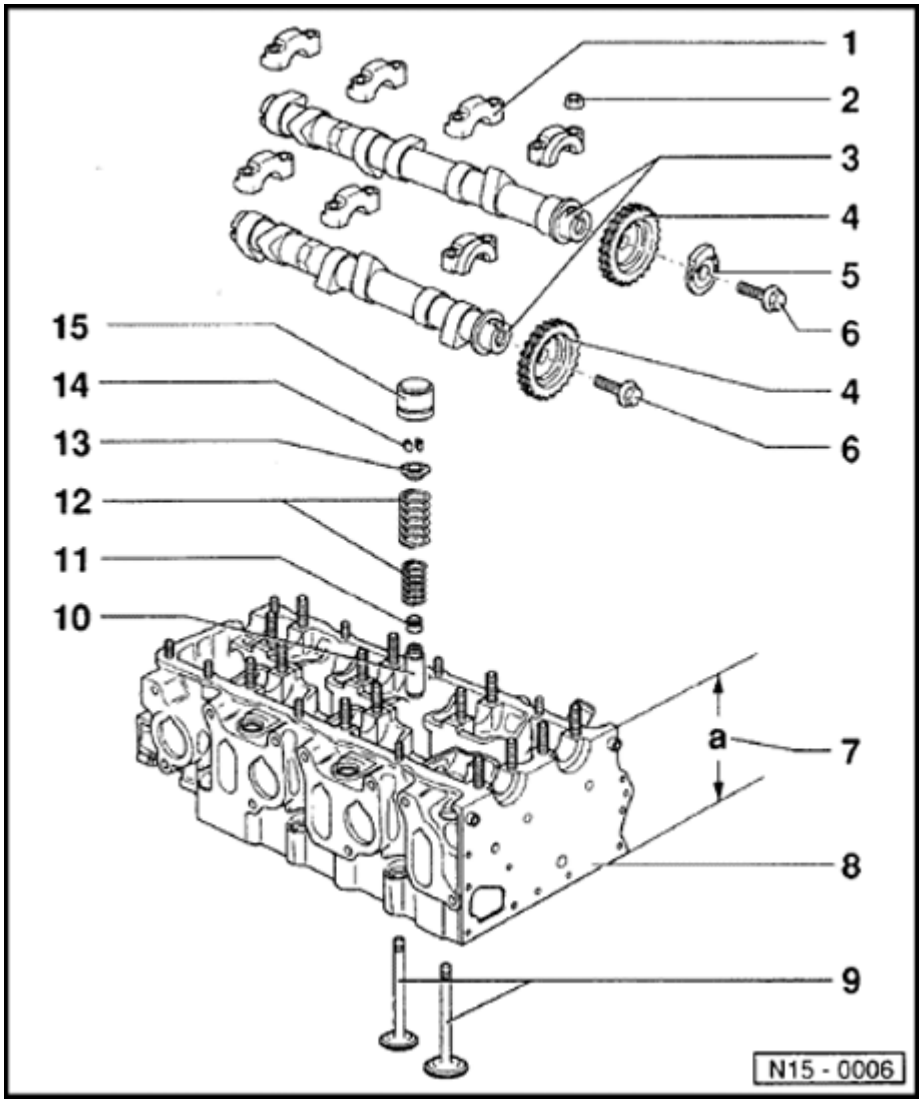

16 - Hydraulic lifter

- Do not interchange
- With hydraulic valve clearance compensation
  - Checking ⇒ Page 15-26
  - Store with cam contacting surface downward
  - Before installing check camshaft axial clearance ⇒ Fig. 1
  - Oil contact surface

15-18

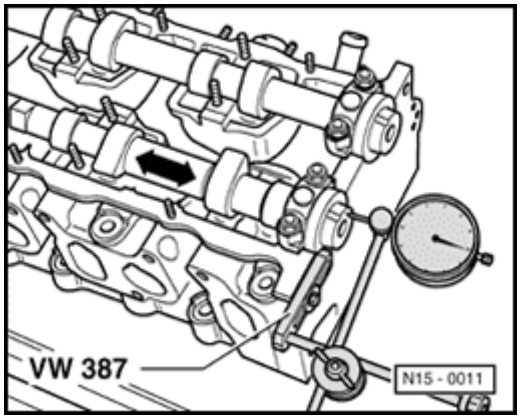

Fig. 1 Camshafts axial clearance, checking

Wear limit: max. 0.15 mm

Check with hydraulic lifters removed and with first and last bearing caps installed for the appropriate camshaft.

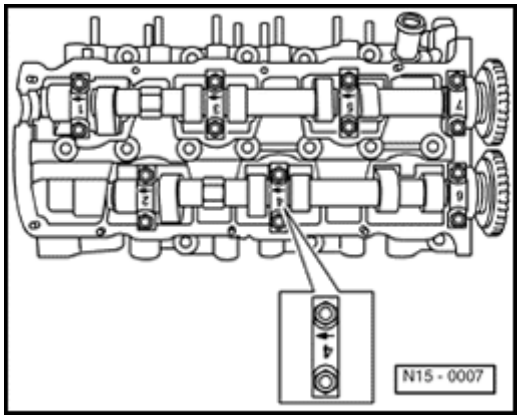

Fig. 2 Installed position of camshaft bearing caps

The bearing cap identification must be readable from the exhaust side of the cylinder head with the arrow pointing to the vibration damper end of the engine.

15-19

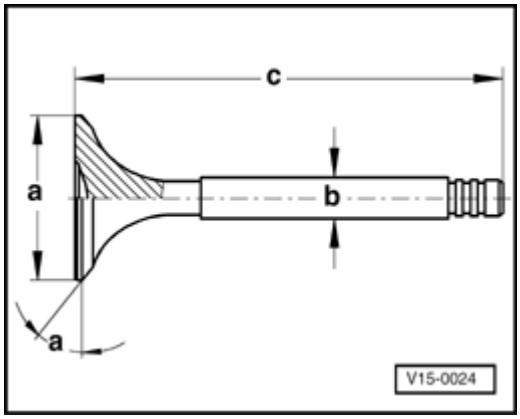

Fig. 3 Valve dimensions

Note:

Valves must not be reworked. Only lapping is permitted.

Dimension		Inlet valve	Exhaust valve
diameter a	mm	39.0	34.20
diameter b	mm	6.97	6.95
c	mm	105.95	106.95
α	∠ °	45	45

15-20

Valve seats, reworking

Note:

- *When repairing engines with leaking valves, it is not sufficient to rework or replace valve seats and valves. It is also necessary to check the valve guides for wear. This is particularly pertinent on high mileage engines.*

- *The valve seats should only be reworked to produce a perfect seat. The maximum reworking dimension must be calculated before rework begins. If the reworking dimension is exceeded, the function of the hydraulic valve lifters can no longer be guaranteed and the cylinder head should be replaced.*

15-21

Maximum reworking dimension, calculating

- Insert valve and press firmly against seat.

Note:

If the valve is to be replaced as part of a repair, use a new valve for the calculation.

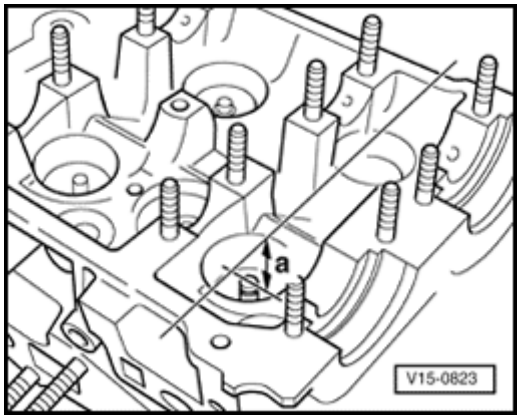

- Measure distance -a- between end of valve stem and upper edge of cylinder head.
- Calculate max. permissible rework dimension from measured distance -a- and minimum dimension.

Minimum dimension:

Inlet valve 33.9 mm

Exhaust valve 34.1 mm

Measured distance minus minimum dimension = maximum permissible reworking dimension.

Example	
Measured distance -a-	34.8 mm
- Minimum dimension	34.1 mm
= max. perm. rework dimension	0.7 mm

15-22

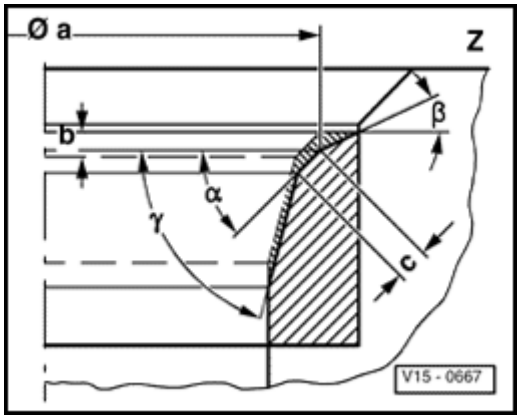

Reworking inlet valve seat

a = diameter 38.3 mm

b = Max. permissible reworking dimension

c = 1.4... to...2.0 mm

If necessary rework valve seat insert with 75° correction cutter

Z = Cylinder head lower edge

α = 45° valve seat angle

β = 30° upper correction angle

γ = 75° lower correction angle

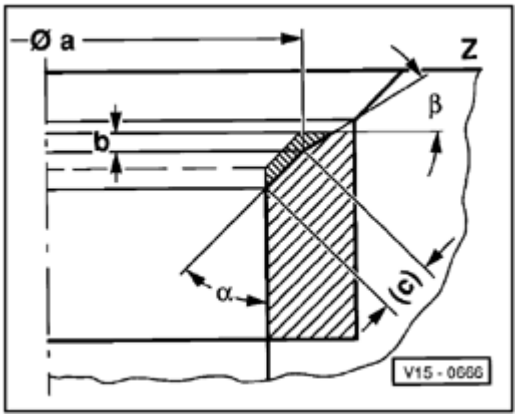

Reworking exhaust valve sea

a = diameter 33.5 mm

b = Max. permissible reworking dimension

c = 2.0...to...2.5 mm

If necessary rework valve seat insert with 75° correction cutter

Z = Cylinder head lower edge

α = 45° valve seat angle

β = 30° upper correction angle

15-23

Camshafts, removing and installing

Removing

- Set engine to TDC for Cyl 1. marks by turnin engine running direction on the vibration dan securing bolt ⇒ Page 13-21 .

- Remove cylinder head cover ⇒ Page 15-9 .

⇒ *Repair Manual, 2.8 Liter VR6 2V Fuel Inject & Ignition, Repair Group 28; Remove ignition c -N152-*

- Remove double chain tensioner.

- Remove camshaft sprocket cover complete Camshaft Position sensor -G40-.

- Loosen camshaft sprocket mounting bolts.

Note:

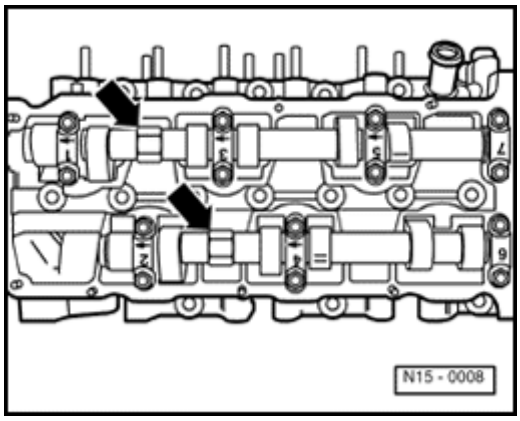

Only counter-hold camshaft using 24 mm open wrench -arrow-. The camshaft jig 3268 must no in place when tightening or loosening the chain sprockets.

- Remove camshaft sprockets.

15-24

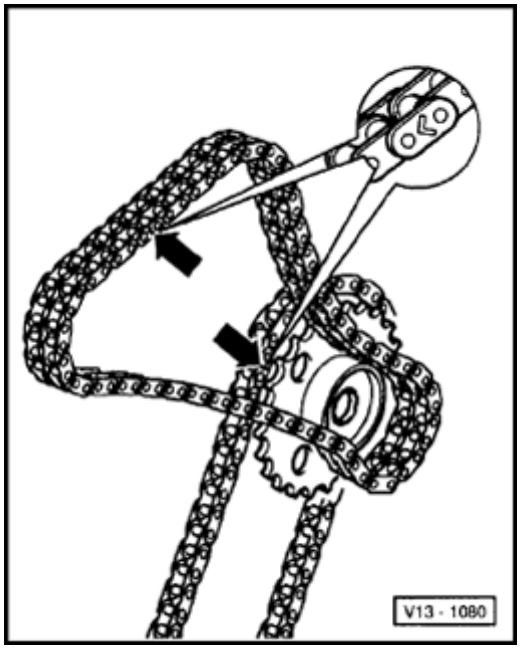

- Mark double chain before removing (e.g. with paint, arrow pointing in engine running direction).

Note:

Do not mark the chain with a center punch or any similar means that could scratch or deface the metal surface!

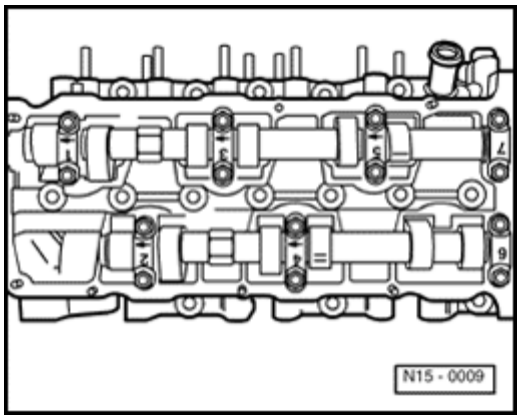

Camshaft for cylinders 1, 3 and 5

- First remove bearing caps 1 and 7.
- Loosen bearing caps 3 and 5 alternately and diagonally.

Camshaft for cylinders 2, 4 and 6

- First remove bearing cap 4.

15-25

- Loosen bearing caps 2 and 6 alternately and diagonally.

Installing

- Oil running surfaces of both camshafts.

Note:

- *Observe engine running direction markings double chain!*

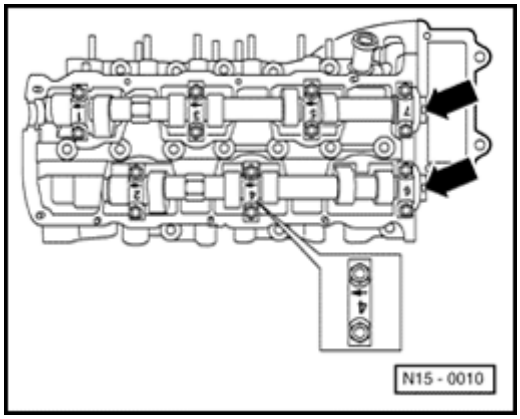

- *When installing the camshafts the recess fo the camshaft sprockets -arrows- must be at*
- *When installing bearing caps make sure tha the identification mark is readable from the exhaust side of cylinder head and that the arrow points to vibration damper end.*

Camshaft for cylinders 1, 3 and 5

- Tighten bearing caps 3 and 5 alternately and diagonally to: 20 Nm (15 ft lb).
- Install bearing caps 1 and 7 and tighten to: 2 Nm (15 ft lb).

Camshaft for cylinders 2, 4 and 6

- Tighten bearing caps 2 and 6 alternately and diagonally to:

20 Nm (15 ft lb).

15-26

- Install bearing cap 4 and tighten to: 20 Nm (
lb).

- Clean sealing surfaces of cover for camshaf
sprockets and cylinder head.

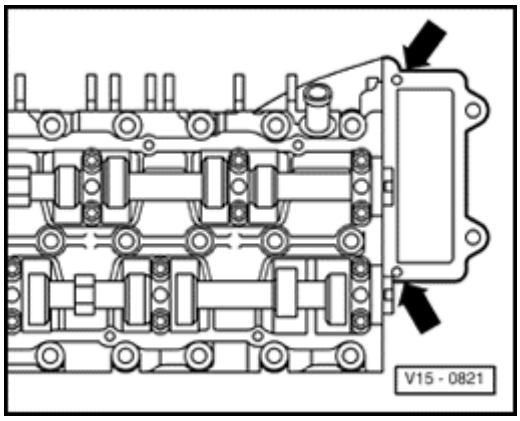

- Remove old sealant from 3 mm holes in cyli
head gasket -arrows-.

Note:

*When the cylinder head is installed, the holes i
head gasket are only half visible.*

- Install camshaft sprockets with double chain
Page 13-24 .
- Fill 3 mm holes in cylinder head gasket with
sealant AMV 188 001 02.
- Coat sealing surfaces of cover for camshafts
with AMV 188 001 02.
- Oil O-ring (⇒ Page 15-3 , item 13) and inse
into camshaft cover.
- Install camshaft cover for camshafts, insert c
securing bolts and tighten lightly.
- First tighten M8 mounting bolts to: 25 Nm (1
lb)

then tighten M6 mounting bolts to: 10 Nm t7 ft l

- Install chain tensioner for double chain and
tighten to 30 Nm (22 ft lb).

15-27

Note:

- *If the chain tensioner has been pulled apart, bleed chain tensioner before installing ⇒ Page 13-7 , ⇒ Fig. 2.*

- *When new lifters have been installed, the engine must not be started for approx. 30 minutes. Hydraulic circuit must settle (otherwise valves will strike pistons).*

15-28

Hydraulic lifters, checking

Note:

- *Replace defective lifter(s) as complete assemblies (can not be adjusted or repairec*
- *Irregular valve noises when starting engine normal.*

- Start engine and run until radiator cooling fa comes on once.
- Increase engine speed to about 2500 rpm fo minutes.

If the hydraulic lifters are still noisy, locate fault lifters as follows:

- Remove cylinder head cover ⇒ Page 15-9 .
- Rotate crankshaft clockwise using vibration damper mounting bolt, until camlobe of the li to be checked is pointing upward.
- Measure clearance between cam and lifter.
- If clearance is in excess of 0.1 mm, replace lifter. If clearance is less than 0.1 mm or non proceed with check as follows:

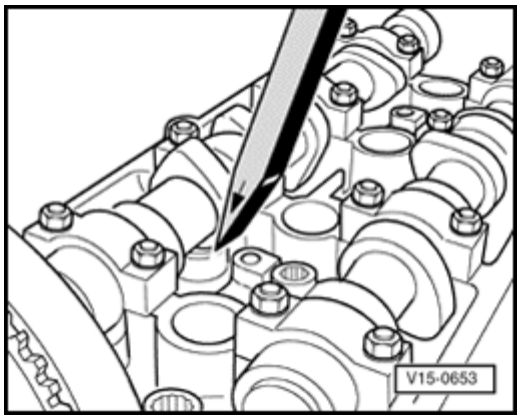

- Press lifter down with a wooden or plastic wedge. If clearance in excess of 1 mm is felt before lifter contacts valve, replace lifter.

Note:

When new lifters have been installed, the engi must not be started for approx. 30 minutes. Hydraulic circuit must settle (otherwise valves strike pistons).

15-29

Valve guides, checking

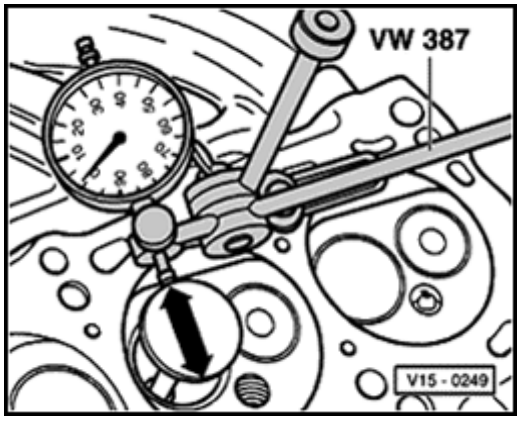

- Insert new valve into guide until end of valve stem is flush with end of guide. Due to the slight difference in stem dimensions, make sure that only an intake valve is used in the intake guide and an exhaust valve in the exhaust guide.
- Determine rock.

  Wear limit:

  Intake valve guide = 1.0 mm

  Exhaust valve guide = 1.3 mm

Valve guides, replacing

- Clean and check cylinder head. Cylinder hea in which the valve seats can no longer be reworked, or cylinder heads which have alre been machined to the minimum dimension (height) ⇒ Page 15-15 , item 7 , or already h service version valve guides installed, are nc suitable to have the valve guides replaced.

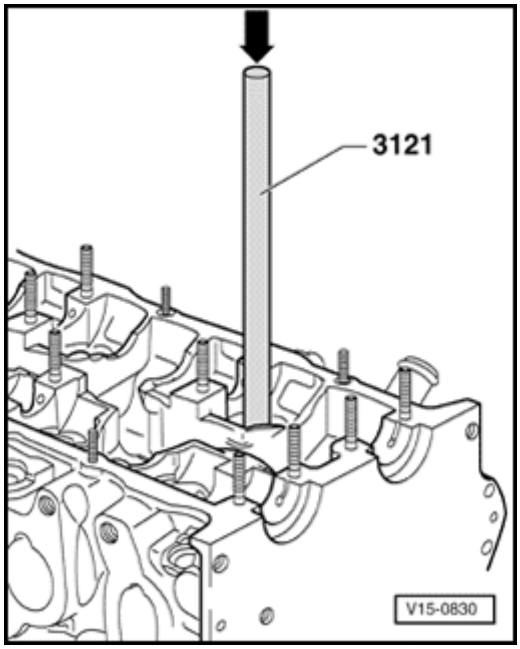

- Press out worn valve guides using 3121 (fro the camshaft side).
- With cylinder head (cold) laying flat, coat nev guides with oil and press in with 3121 from tl camshaft side until guide shoulder makes contact.

Note:

When the guide shoulder makes contact, the pressure must not exceed 2000 lbs otherwise shoulder may break off of guide.

- Ream out guides with hand reamer 3120 usi plenty of cutting fluid.
- Rework valve seats ⇒ Page 15-20 .

Valve stem seals, replacing

With cylinder head installed

- Remove camshafts ⇒ Page 15-23 .
- Remove lifters (do not interchange) and store with the contact surface downward.
- Remove spark plugs.
- Set piston of appropriate cylinder to "bottom dead center".

15-32

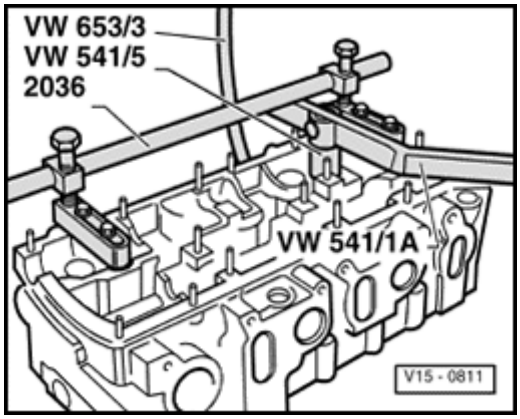

- Install assembly tool 2036 and adjust mountings to height of studs.
- Screw compressed air hose VW 653/3 into spark plug thread and apply a continuous pressure of 6 bar (minimum).
- Remove valve springs using lever VW 541/1A and press tool VW 541/5.

Note:

Tight keepers can be loosened by tapping lightly on the lever.

- Remove valve stem seals using 3047A.
- To prevent damage to the new valve stem seals, place plastic sleeve -A- on valve stem.

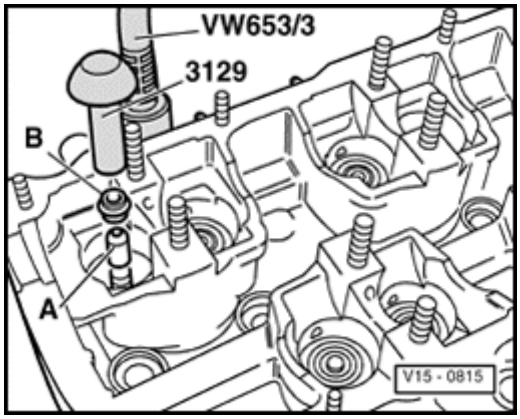

- Oil valve stem seal -B-, place it in the tool 3129 and push carefully onto the valve guide.

Lubrication system, component removal and installation

Notes:

- *When repairing an engine, metal shavings or large quantities of small metal particles (for example, caused by partial seizure of crankshaft and connecting rod bearings) are found in engine oil; to prevent subsequent damage replace all oil spray jets, the oil pump check valve and oil cooler, thoroughly clean the oil passage*

- *The oil level must not be above the max. mark on the dipstick, because of possibile damage to three way catalyst!*

Checking oil pressure and oil pressure switch ⇒ Page 17-14

Oil system capacity:

- Without oil filter 5.0 liters.

- With oil filter 5.5 liters.

17-2

Engine oil specifications:

The following terms must appear on the oil container or in combination with other designations:

- VW 502 00 or VW500 00 or VW501 01
- ACEA A2 or ACEA A3
- API-SJ or API-SL

Engine oils are graded according to viscosity. The proper grade to be used depends on existing climatic or seasonal conditions.

The engine oil which was first put in has a viscosity grade of SAE 5W-40. This can be used over all temperature ranges for normal driving. If SAE 5W-40 is not available, SAE 5W-30 can be used.

17-3

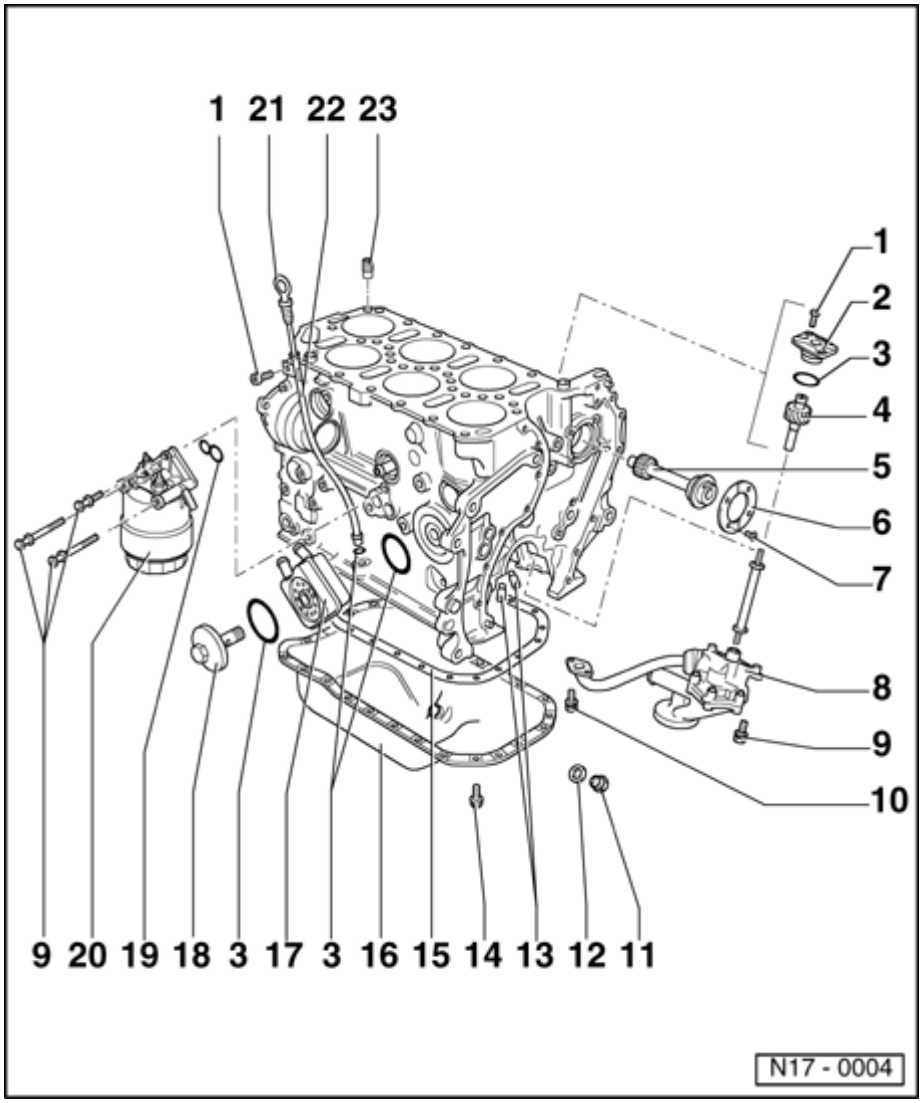

1 - 10 Nm (7 ft lb)

2 - Oil pump drive cover

3 - O-ring

- Always replace
- Lubricate before installing

4 - Oil pump drive

5 - Intermediate shaft

6 - Thrust washer

7 - 10 Nm (7 ft lb)

- Insert with locking fluid "D6"

8 - Oil pump

- Disassembling and assembling ⇒ Page 17-11
  - Coat oil pressure pipe at cylinder block and oil pump housing with AMV 188 001 02

17-4

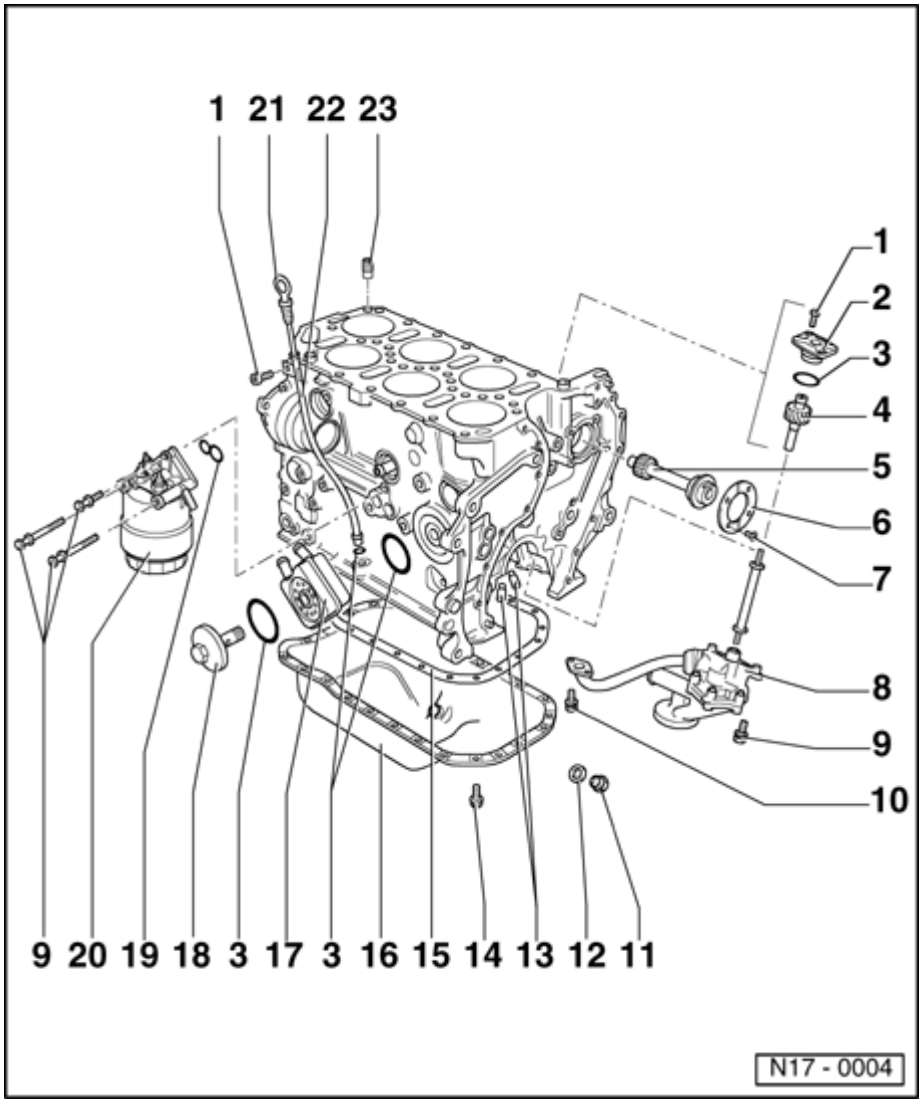

9 - 25 Nm (18 ft lb)

10 - 10 Nm (7 ft lb)

- Always replace
- Install with locking fluid "D6"

11 - Oil drain plug

- 30 Nm (22 ft lb)

- Replace if leaking. ⇒ Parts Catalog for correct application. In some cases, seal and drain plug are combined; do not interchange with separate seal and drain plug.

12 - Seal

- Always replace

13 - Oil spray jet

- For piston cooling

- Removing and installing ⇒ Fig. 1
- Opening pressure: 2.0 bar
- See note ⇒ Page 17-1

14 - 15 Nm (11 ft lb)

17-5

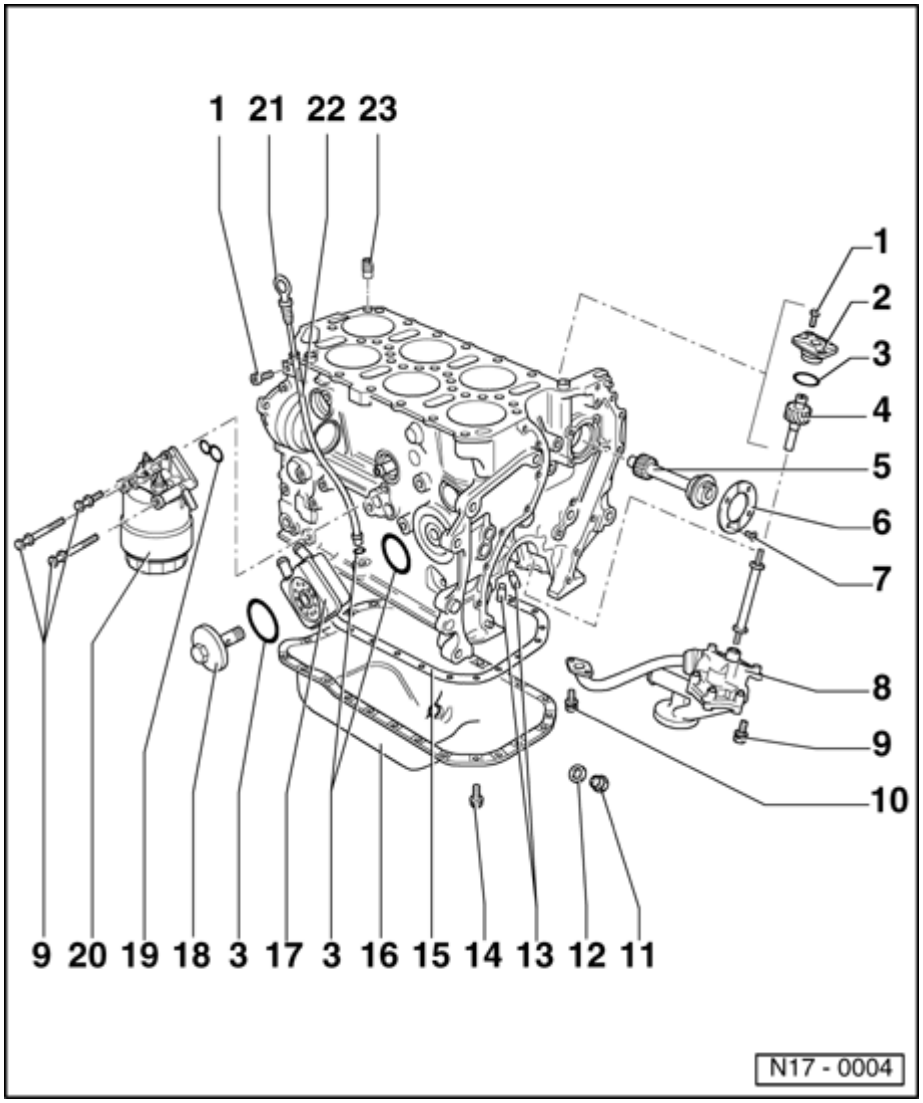

15 - Gasket

- Replace if damaged
- Before installing gasket coat sump flange and cylinder block flange with "D2"

16 - Sump

- Clean sealing surface before installing

17 - Oil cooler

- Coat contact area to flange, outside the seal, with AMV 188 100 02

- Make sure clearance between adjacent components
  - See note ⇒ Page 17-1

18 - Oil cooler cover

- 25 Nm (18 ft lb)

19 - Gasket

- Always replace
- Note installation position
- Oil before installing

17-6

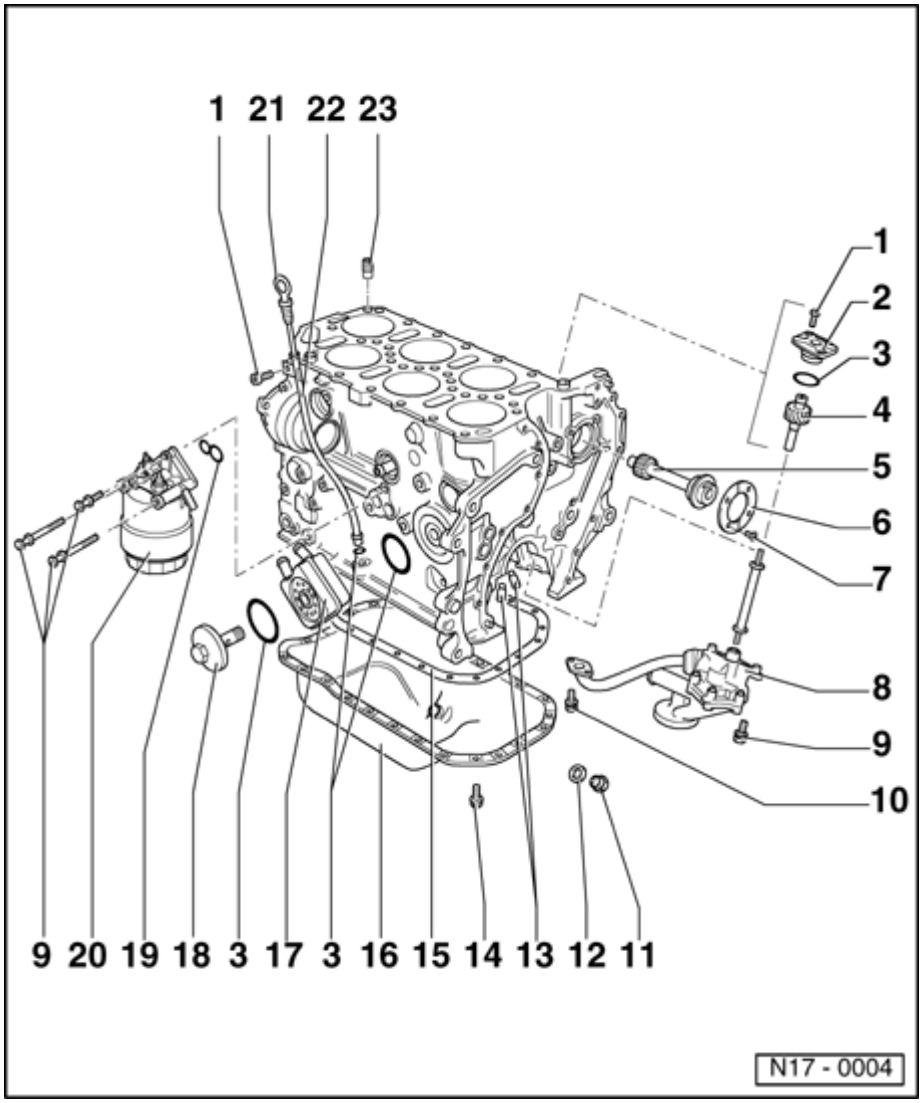

20 - Oil filter housing

- Disassembling and assembling ⇒ Page 17-8

21 - Dipstick

- The oil level must not be above the max. mark on the dipstick!

22 - Guide tube

- Secure bolt to inlet manifold lower section

23 - Oil check valve

- 5 Nm (44 in. lb)
- Note installed position
- Clean if badly soiled
- See note ⇒ Page 17-1

17-7

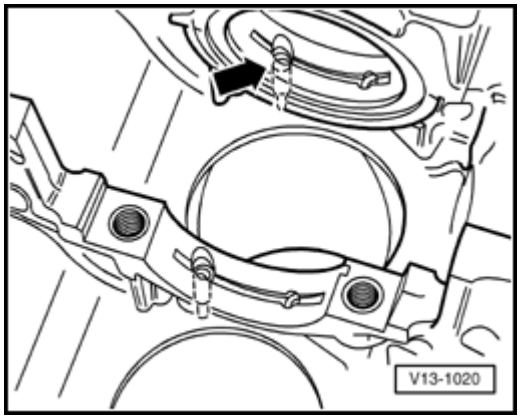

Fig. 1 Removing and installing oil spray jet

Note:

Oil spray jets are installed in main bearings 2 ... 7.

- Crankshaft removed

- Remove with 4 mm diameter punch.
- Install by hand with a 6 mm diameter punch -arrow-.

17-8

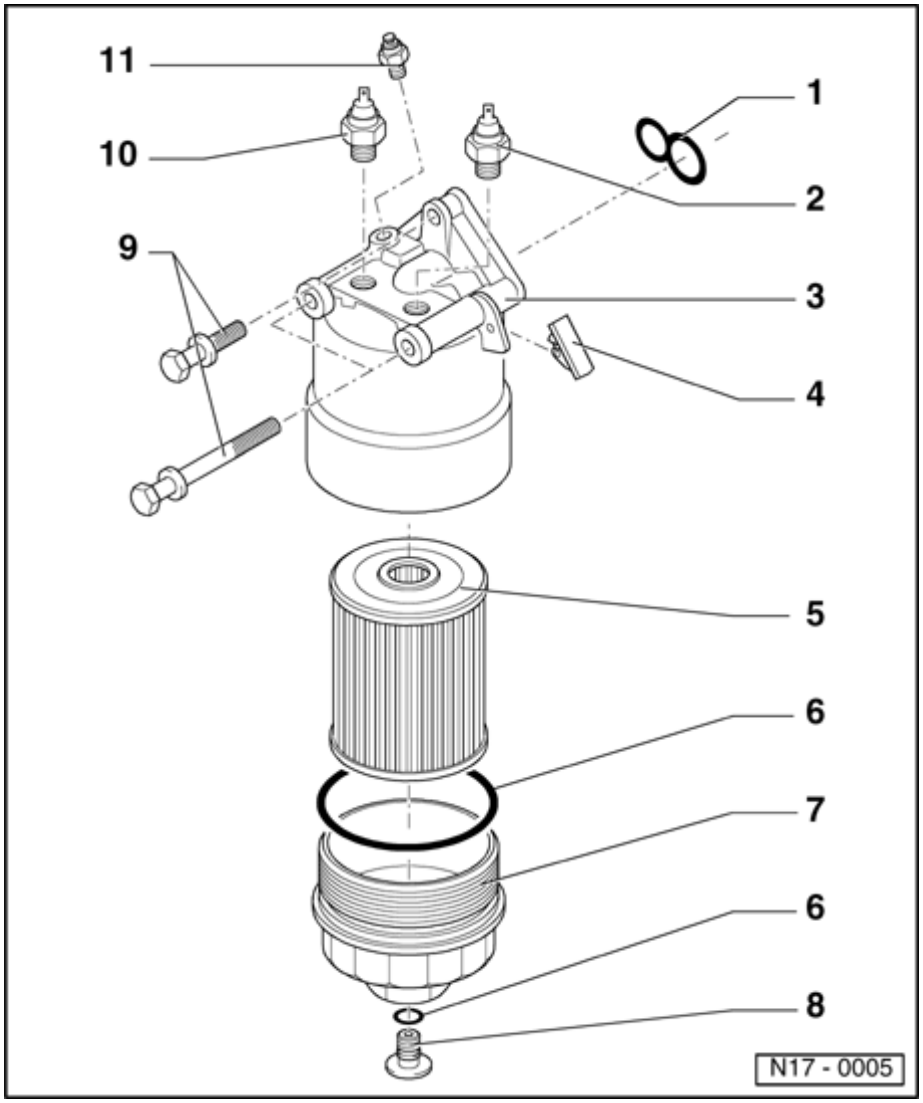

Oil filter housing, disassembling and assembling

1 - Gasket

- Always replace
- Note installed position
- Oil before installing

2 - 0.3 bar oil pressure switch -F22-

- 20 Nm (15 ft lb)
- Brown
- Wiring: blue/black
- Checking ⇒ Page 17-14
- If sealing ring is leaking nip open and replace.

3 - Oil filter bracket

4 - Stop plate

- For oil cooler
- Mounted to oil filter bracket

17-9

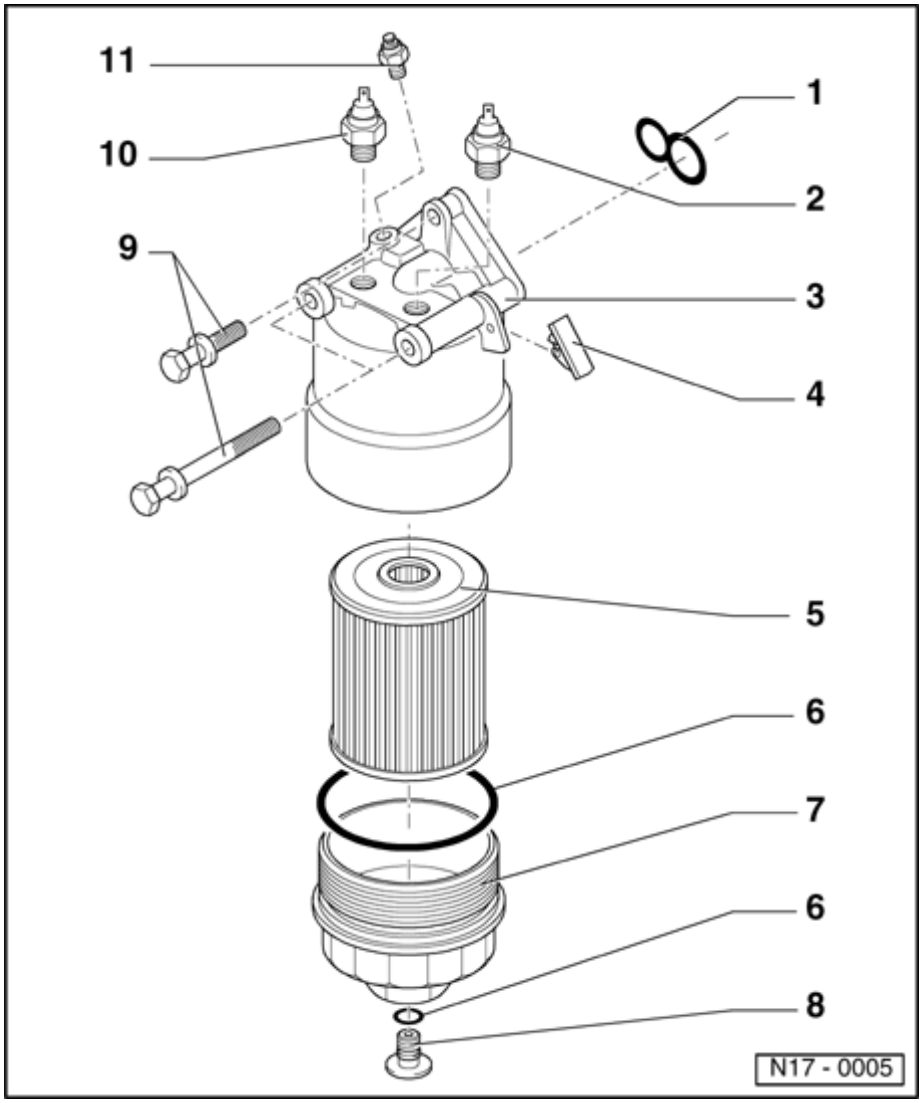

5 - Oil filter element

- Observe change intervals
- With by-pass valve Opening pressure: 2.0 bar
- Clip into oil filter lower section before installing

6 - O-ring

- Always replace
- Lubricate before installing

7 - Oil filter lower section

- 30 Nm (22 ft lb)
- Drain before removing

8 - Oil drain screw

- 10 Nm (7 ft lb)

9 - 25 Nm (18 ft lb)

17-10

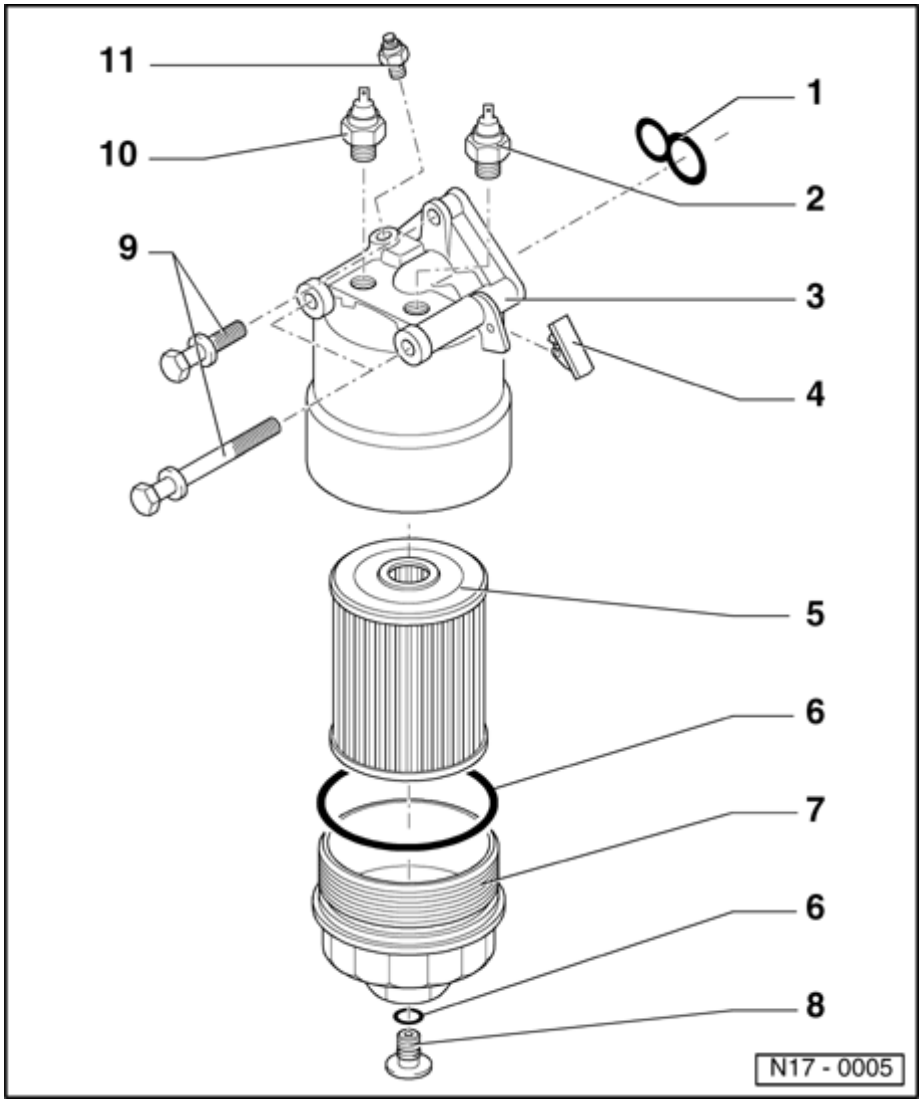

10 - 1.4 bar oil pressure switch - F1-

- 25 Nm (18 ft lb)
- Black
- Wiring: yellow
- Checking ⇒ Page 17-14
- If sealing ring is leaking nip open and replace.

11 Engine oil - temperature sensor -G8-

- 10 Nm (7 ft lb)

17-11

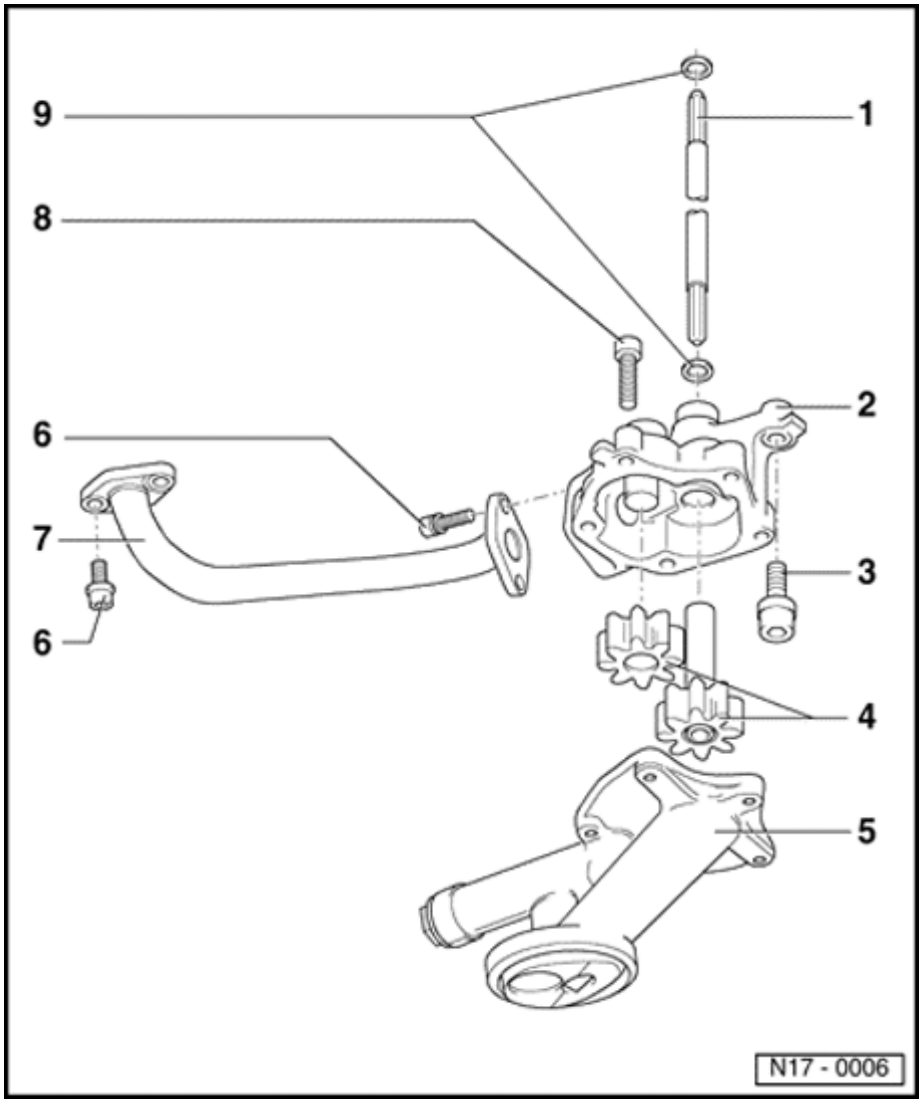

Oil pump, disassembling and assembling

1 - Drive shaft

- For oil pump drive

2 - Oil pump housing

3 - 25 Nm (18 ft lb)

4 - Gears

- Checking backlash ⇒ Fig. 1
- Checking axial clearance ⇒ Fig. 2

5 - Oil pump cover with pressure relief valve

- Opening pressure: 5.3...5.7 bar
- Clean strainer if dirty

17-12

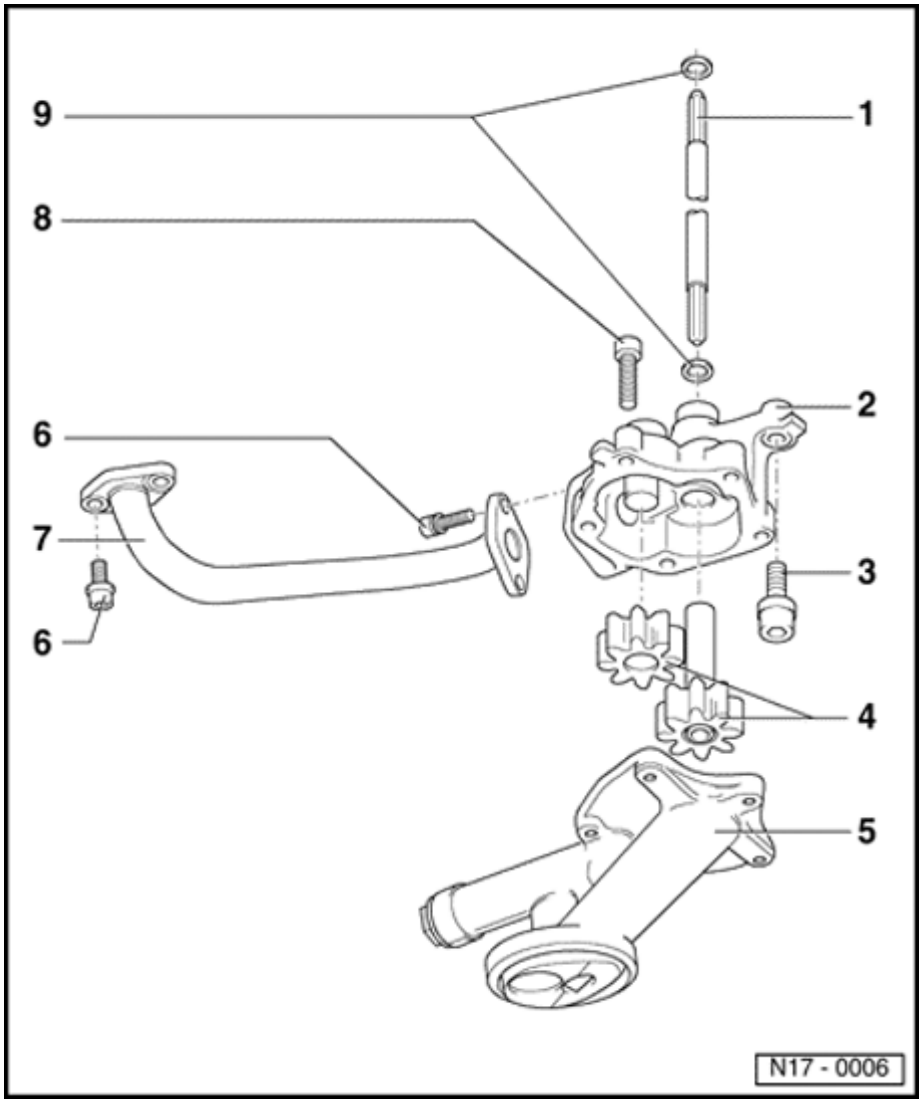

6 - 10 Nm (7 ft lb)

- Always replace
- Install with locking fluid "D6"

7 - Oil pressure pipe

- Coat cylinder block and oil pump housing with AMV188 001 02

8 - 10 Nm (7 ft lb)

9 - O ring

- Replace if damaged

17-13

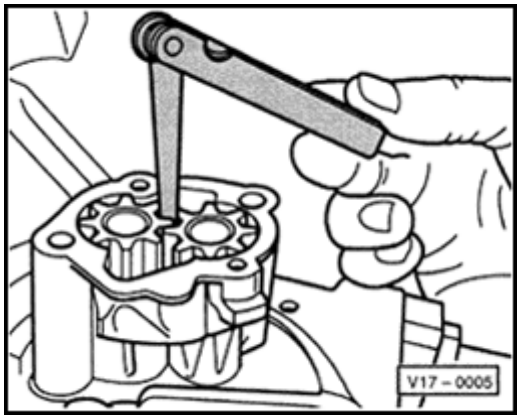

Fig. 1 Checking oil pump backlash

Wear limit: 0.20 mm

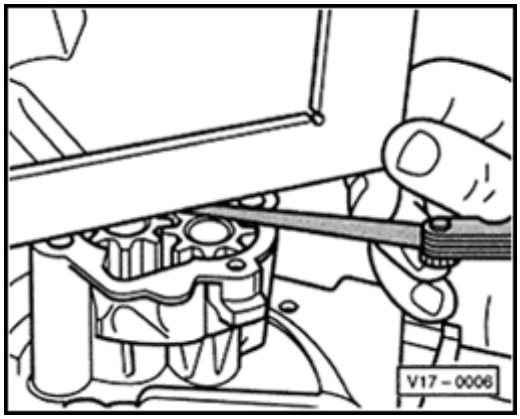

Fig. 2 Checking oil pump axial clearance

Wear limit: 0.10 mm

17-14

Oil pressure and oil pressure switch, checking

Note:

To check and service the optical and acoustic pressure warning see the wiring diagram.

- Remove 0.3 bar oil pressure switch -F22- (b insulation) and screw into the tester.

- Screw tester into the oil filter bracket in place the oil pressure switch.

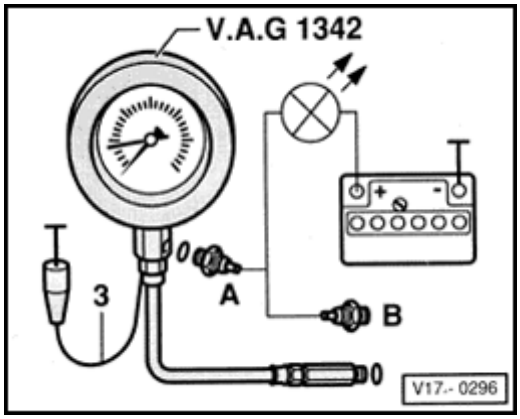

- Connect brown wire -3- of tester to ground (-
- Connect diode test lamp VAG 1527B using a cables from VW 1594 adaptor kit to battery positive (+) and 0.3 bar oil pressure switch -F -A-. LED must light up.
- Start engine and increase engine speed slov At 0.15...0.45 bar, LED must go out
- If no, replace 0.3 bar oil pressure switch -F2

17-15

- Connect diode test lamp to 1.4 bar oil pressure switch -F1- (black insulation) -B-.

  At 1.21.6 bar the LED must light up.

- If LED does not light up, replace oil pressure switch -F1-.

- Increase engine speed.

  - At 2000 rpm and an oil temperature of 80 °C the oil pressure should be at least 2.0 bar.

  - At higher engine speed the oil pressure must not exceed 7.0 bar.

Replace oil pump, if necessary.

Cooling system, component removal and installation

Note:

- *When the engine is warm the cooling system is under pressure. If necessary release pressure before commencing repair work.*
- *Hoses are secured with spring-type clips. In case of repair only use spring-type clips.*
- *Commercial pliers e.g. Hazet 798-5 are recommended for installing spring-type clips.*
- *When installing coolant hoses, route them stress-free, so that they do not come into contact with other components (observe markings on coolant connection and hose).*

Draining and filling with coolant ⇒ Page 19-13

Coolant mixture ratios ⇒ Page 19-13

Perform cooling system leakage check using VAG 1274 and 1274/3.

19-2

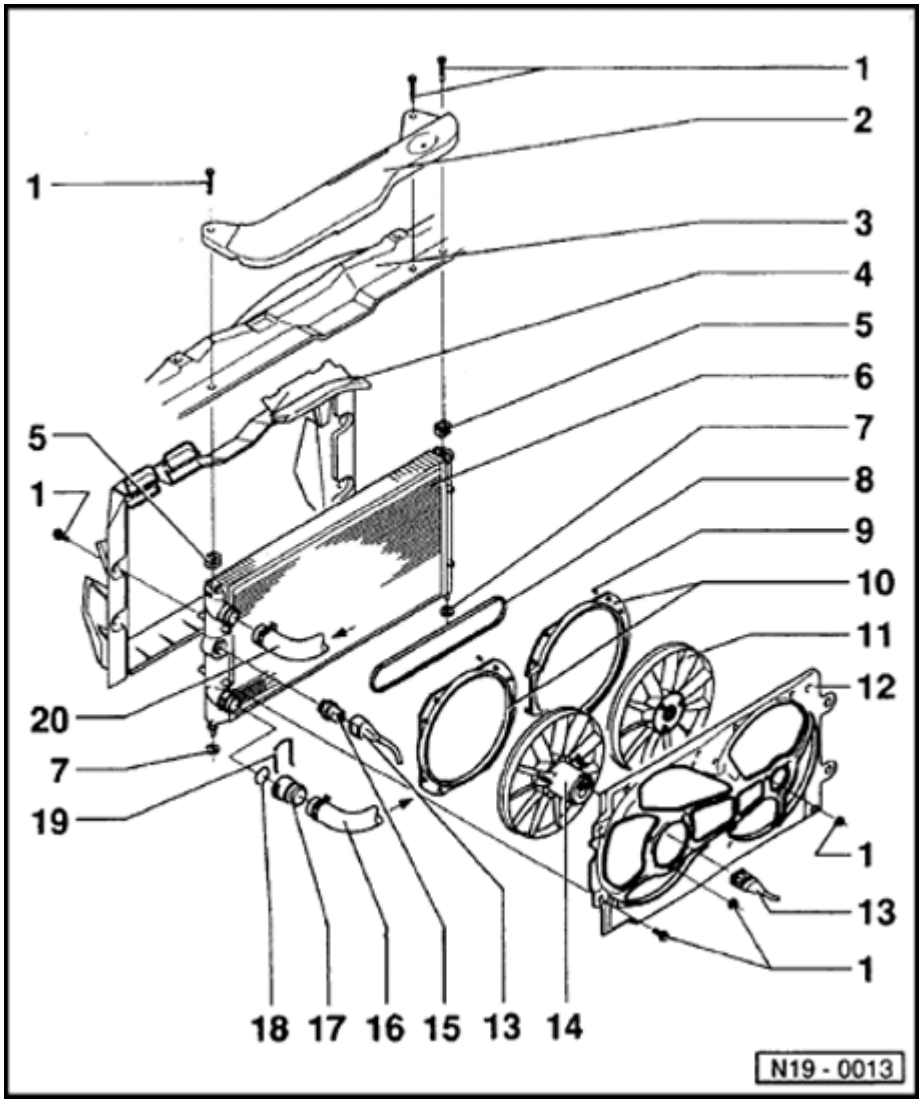

Cooling system component layout (body side)

1 - 10 Nm (7 ft lb)

2 - Cover

3 - Lock carrier

4 - Air ducting

5 - Bracket

6 - Engine coolant radiator

- Removing and installing: ⇒ Page 19-15
- After replacing, replace entire coolant supply with new mixture

7 - Rubber washer

8 - V-belt

9 - Expanding pin

19-3

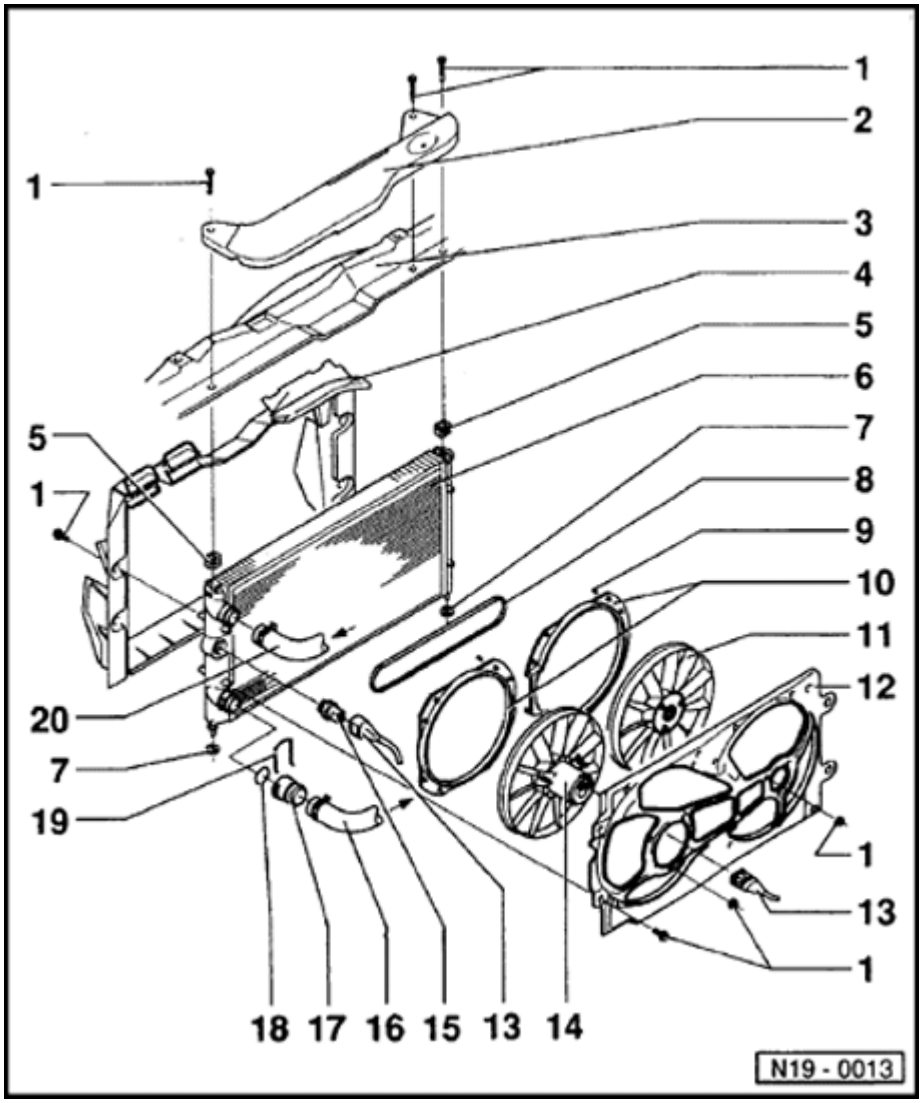

10 - Guide ring

- Note installed position
- Mounted on fan ring (item 12) using clips

11 - Additional fan

- Removing and installing ⇒ Page 19-15

12 - Fan ring

13 - Connector

14 - Radiator cooling fan

- Removing and installing ⇒ Page 19-15

15 - Coolant Fan Control (FC) Thermal Switch - F18-

- 35 Nm (26 ft lb)
- For radiator fan, (item 14)

- Switching temperatures:

  Stage 1

  on: 92...97 °C

  off: 84...91 °C

  Stage 2

  on: 99...105 °C

  off: 91...98 °C

19-4

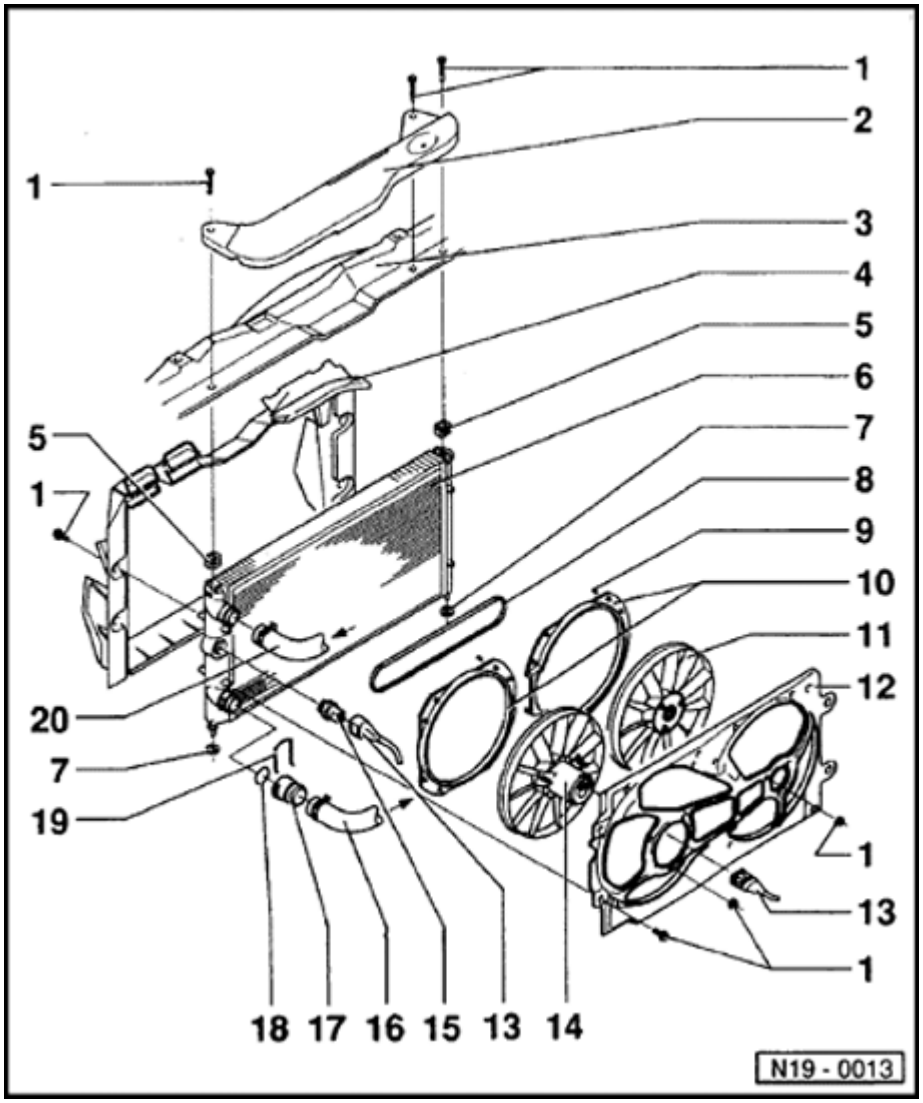

16 - Lower coolant hose

- To thermostat housing ⇒ Page 19-7 , item 19

17 - Connection

18 - O-ring

- Alway replace

19 - Retaining clip

- Make sure that it is seated securely

20 - Upper coolant hose

- From thermostat housing ⇒ Page 19-7 , item 18

19-5

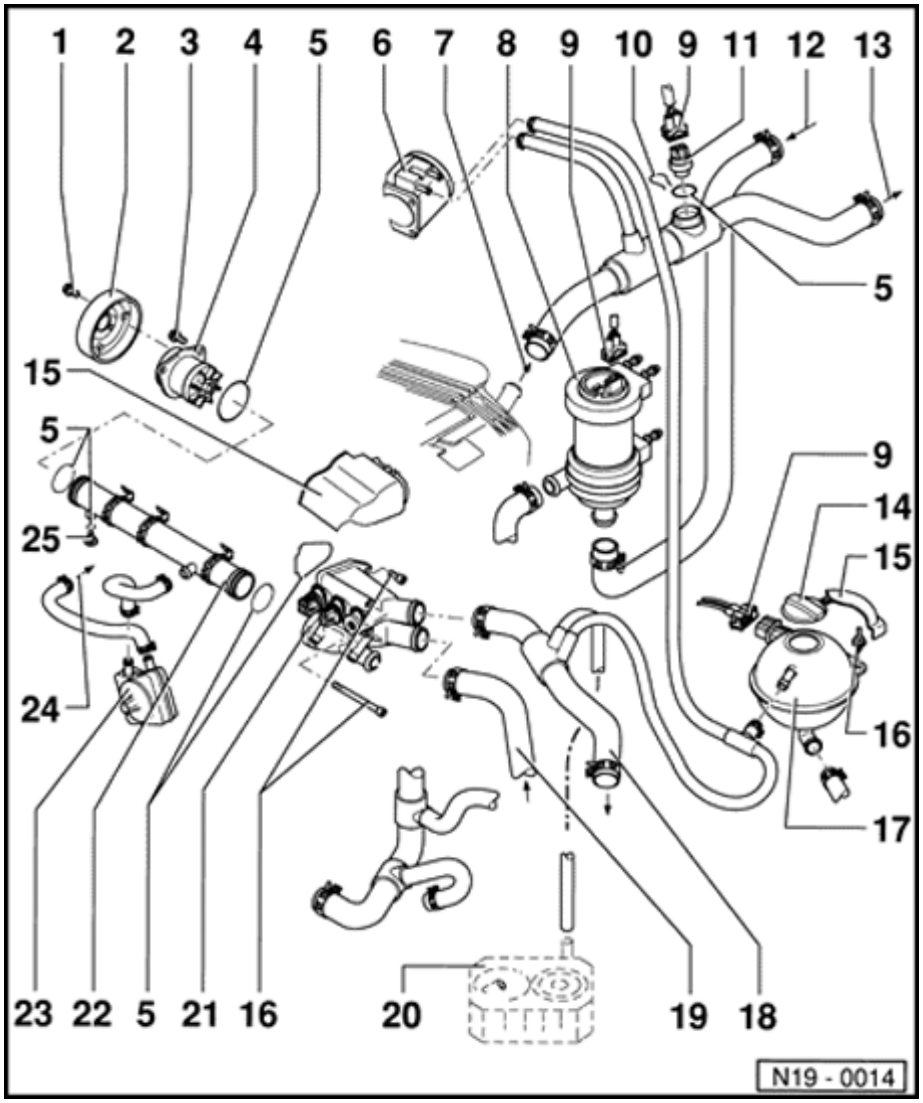

Cooling system, component layout (engine side)

1 - 25 Nm(18 ft lb)

- To loosen and tighten use VAG 1590
- Modify water pump wrench VAG 1590 ⇒ Fig. 1

2 - Pulley

- For coolant circulation pump

3 - 20 Nm(15 ft lb)

4 - Coolant pump

- Check shaft for ease of movement
- Removing and installing ⇒ Page 19-17

5 - O-Ring

- Always replace

6 - Throttle body

7 - From cylinder head

19-6

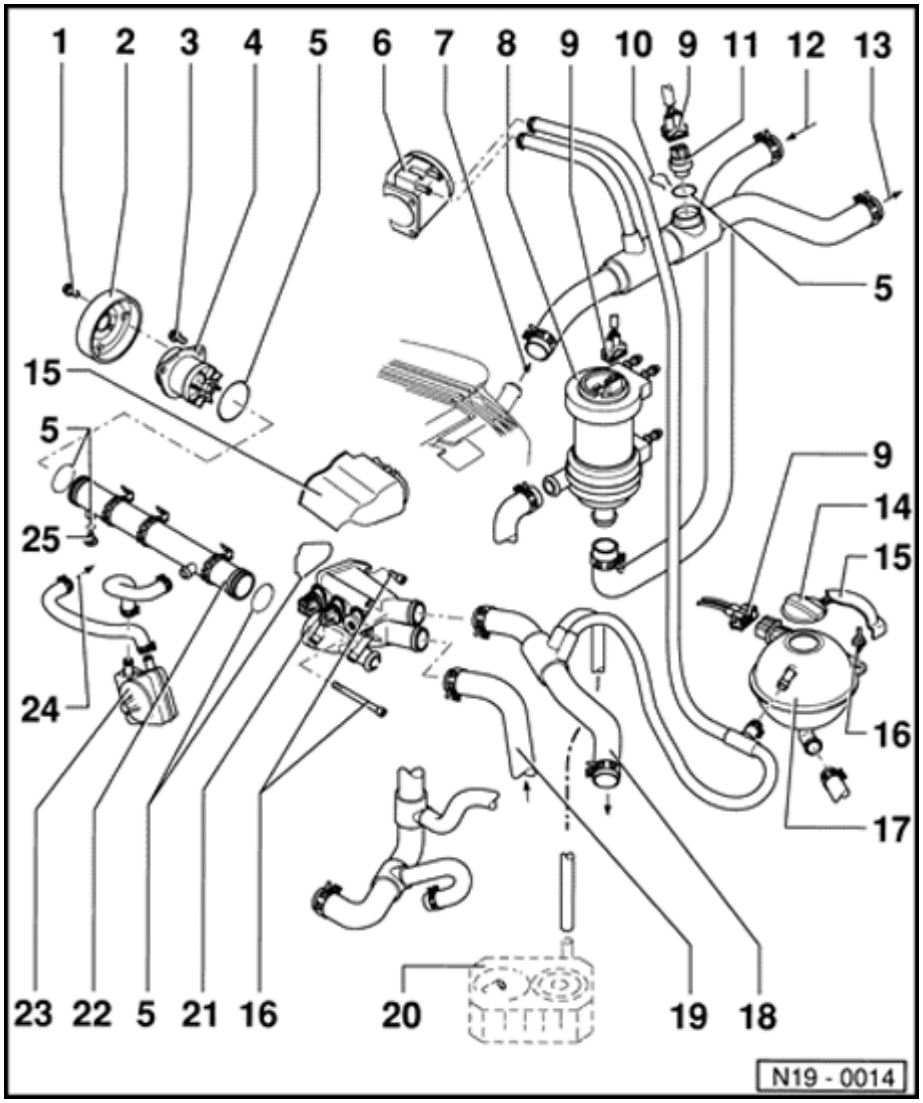

8 - Continued coolant circulation pump - V51-

- Checking ⇒ Page 19-21
- Secured with bracket to the camshaft sprocket cover ⇒ Page 15-4 , item 17

9 - Connector

10 - Retaining clip

- Make sure that it is seated securely

11 Engine - Coolant Temperature (ECT) sensor - G62-

- Black
- 2 pin
- For Climatronic

⇒ Repair Manual, Heating & Air Conditioning, Repair Group 01;

Checking

12 - From heat exchanger

13 - To heat exchanger

19-7

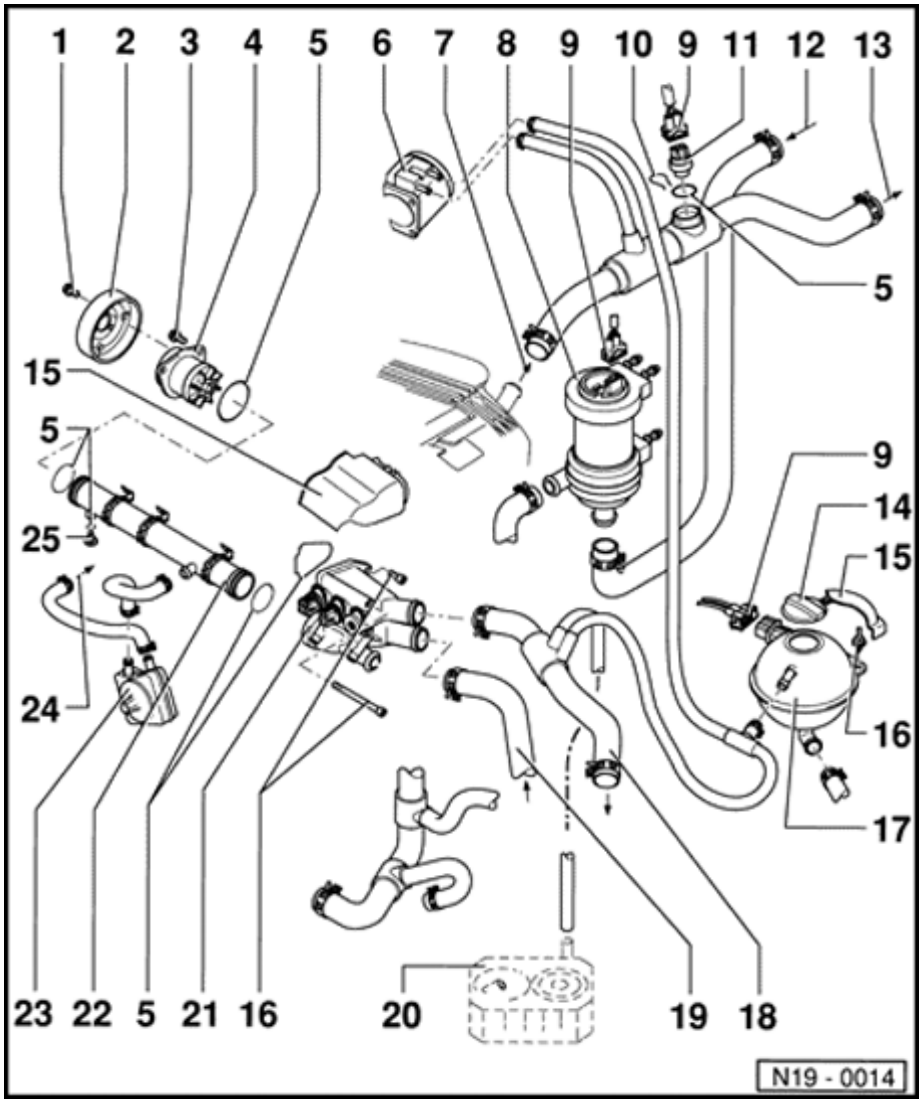

14 - Cap

- Check with VAG 1274 and 1274/4
- Test pressure: 1.3...1.5 bar

15 - Cover

16 - 10 Nm (7 ft lb)

17 - Expansion tank

18 - Upper coolant hose

- To top off radiator ⇒ Page 19-4 , item 20

19 - Lower coolant hose

- From bottom of radiator ⇒ Page 19-4 , item 16

20 Automatic - Transmission Fluid (ATF) cooler

- Only for vehicles with automatic

transmission

⇒ *Repair Manual, 4 Spd. Automatic Transmission, Repair Group 37; Removing and installing*

19-8

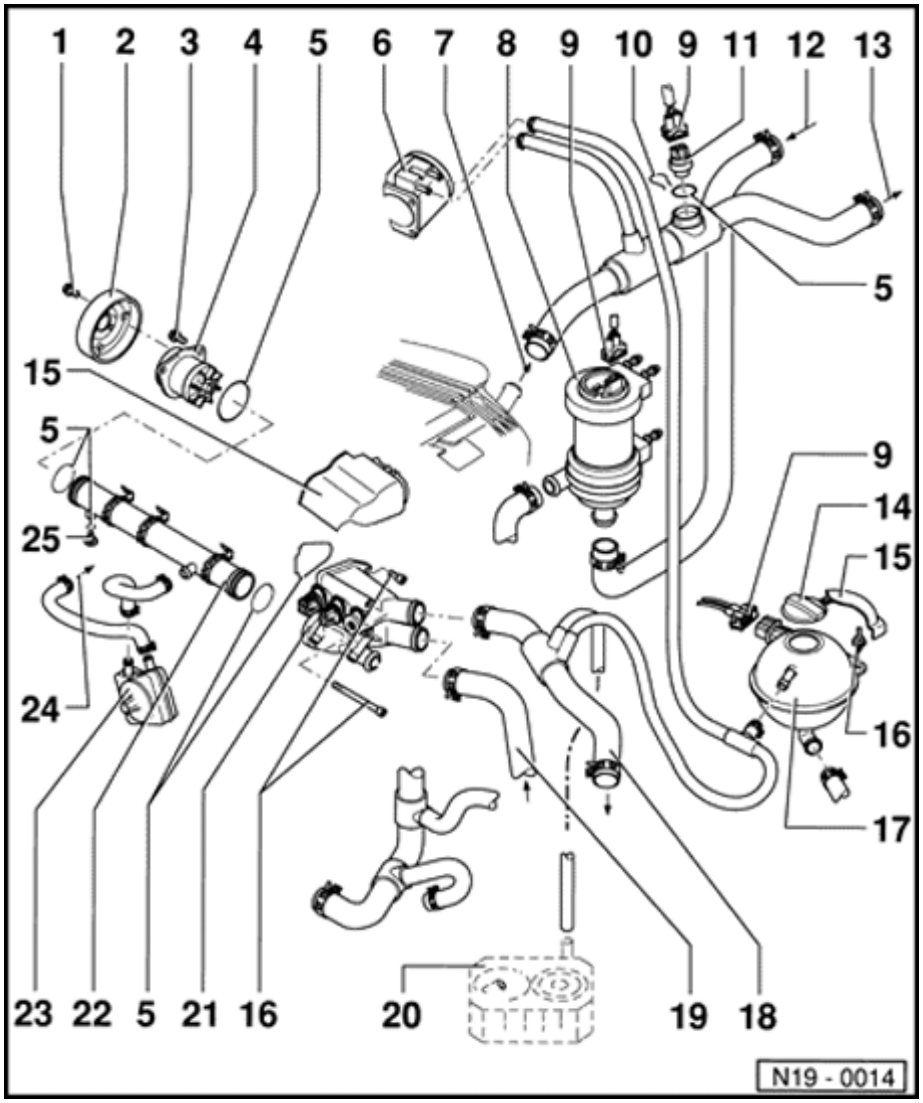

21 - Thermostat housing

- Disassembling and assembling ⇒ Page 19-10

22 - Coolant hose

23 - Oil cooler

- Removing and installing ⇒ Page 17-5 , item 17

24 - To cylinder block

25 - Drain screw

- 10 Nm (7 ft lb)
- Draining and filling with coolant ⇒ Page 19-13

19-9

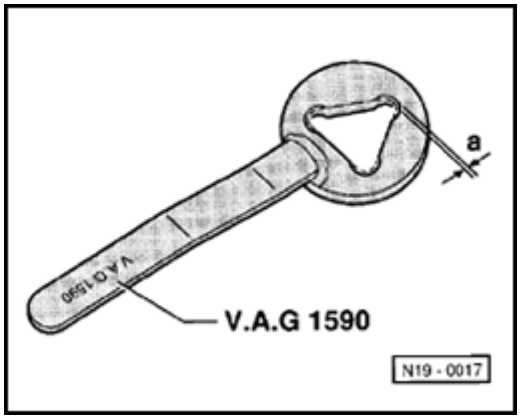

Fig. 1 Modifying coolant pump wrench VAG 1590

- Due to the modified bolts for securing the coolant pump pulley, file the three corners which have already been rounded off by: a = 1 mm.

19-10

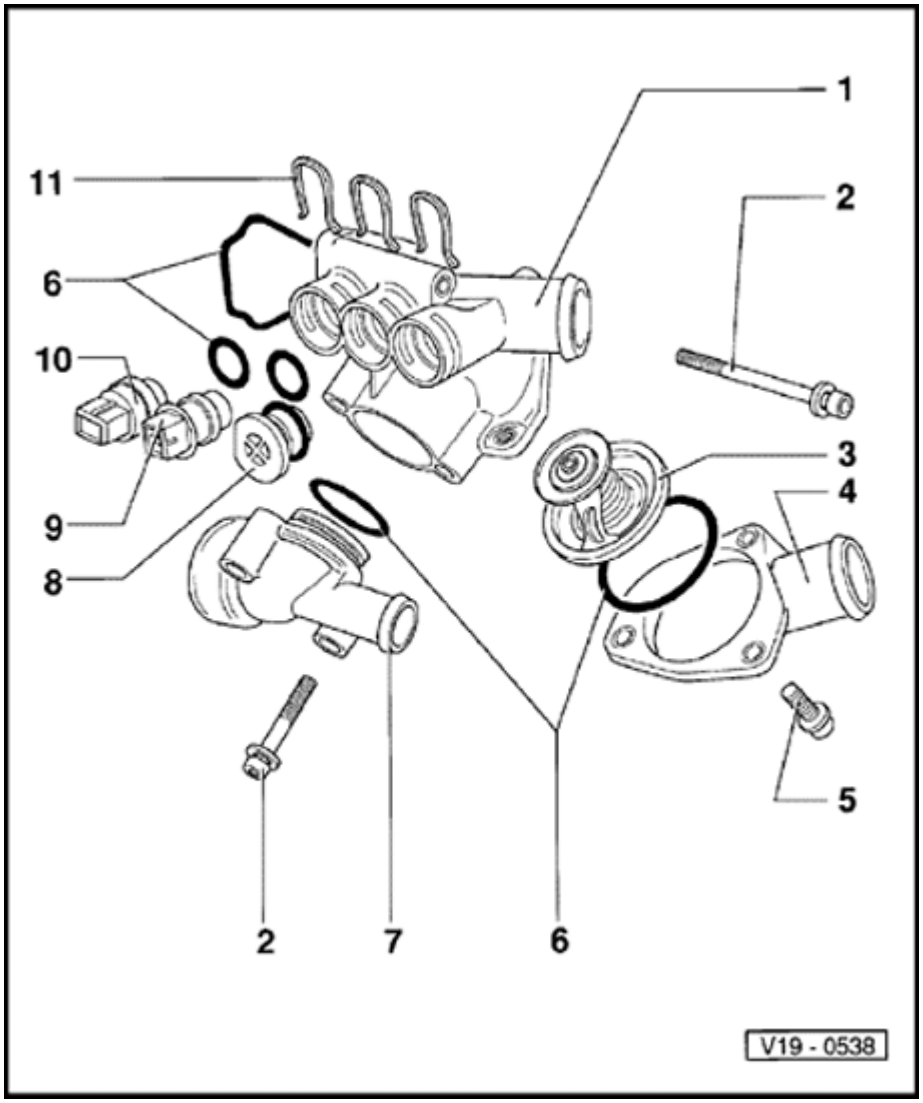

Coolant thermostat housing, disassembling and assembling

Note:

Connecting the coolant hoses to thermostat housing ⇒ Page 19-5 .

1 - Thermostat housing

2 - 10 Nm (7 ft lb)

3 - Coolant thermostat

- Checking: submerge thermostat in heated water
- Opening begins at approx. 80 ° C
- Opening ends at approx.105 ° C
- Opening stroke: 7 mm (minimum)

4 - Connection

19-11

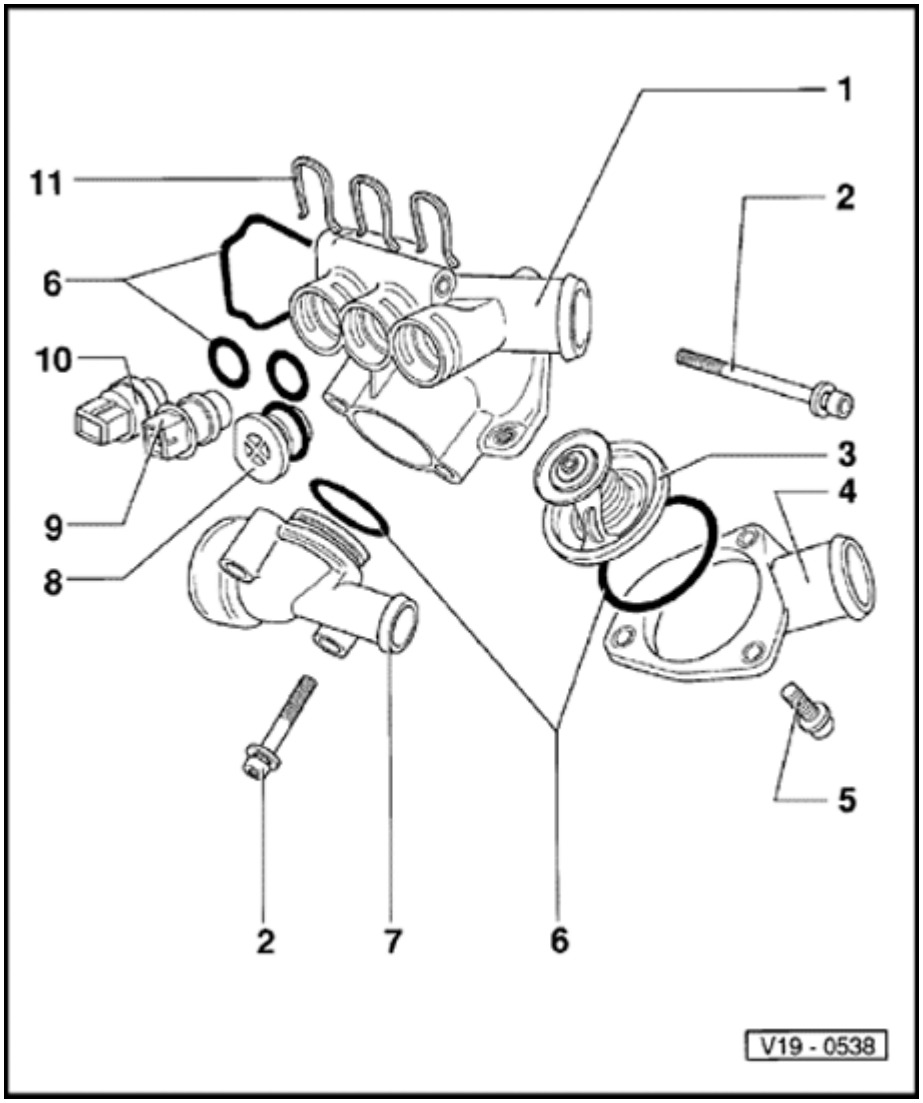

5 - 10 Nm (7 ft lb)

6 - O-Ring

- Always replace

7 - Connection

8 - Plug

- For vehicles without A/C
- A/C Cut-Out Thermal switch - F163- and Third Speed Coolant Fan Control Thermal switch - F165- on vehicles with A/C

-brown

-4-pin

⇒ *Repair Manual, Heating & Air Conditioning, Repair Group 87*

19-12

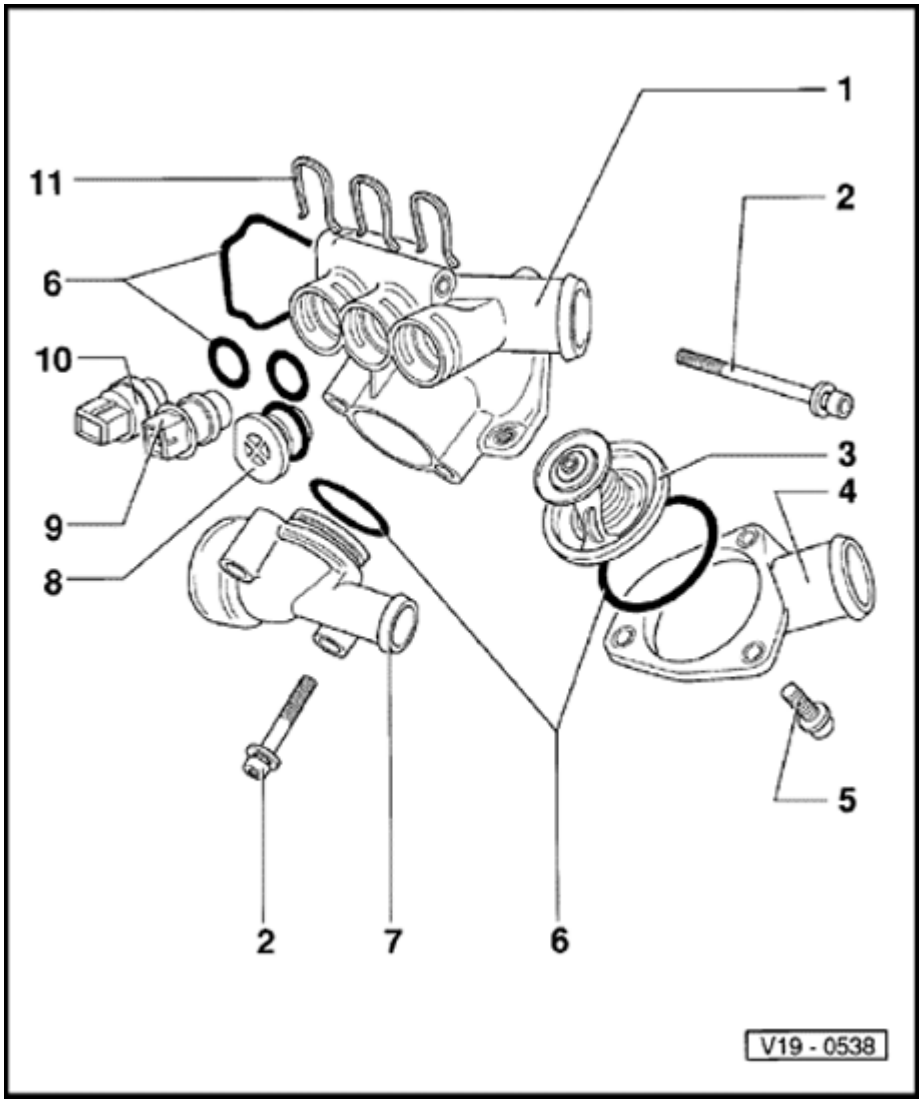

9 - After-Run Coolant Fan Control Thermal switch -F87- with Engine Coolant Temperature sensor -G2-

- Yellow, 4-pin
- Checking ⇒ Page 19-21

- Switching temperatures:

  on: 101...107 °C

  off: 94...100 °C

10 Engine - Coolant Temperature sensor - G62-

- Blue, 2-pin
- For Motronic
- see Repair Group 01

11 - Retaining clip

- Make sure that clip is

seated
securely

19-13

Cooling system, draining and filling

Draining

- Remove cap from coolant expansion tank.

- Remove drain screw from coolant line ⇒ Page 19-8 , item 25

Filling

Note:

- *The cooling system is filled all-year-round with a mixture of water and anti-freeze and corrosion protection agent G 11. G 11 and coolant additives marked as being "in accordance with TL VW 774 B" prevent frost and corrosion damage, the formation of chalk and in addition, they raise the boiling point of the coolant. For these reasons, the cooling system must be filled all-year-round with anti-freeze and corrosion protection agent. Due to the higher boiling point, the coolant is an aid to operational efficiency when the engine is operating at high loads, particularly in tropical climates.*

- *If radiator, heat exchanger, cylinder head or cylinder head gasket is replaced, do not reuse old coolant; replace with new coolant.*

19-14

Recommended mixture ratios:

Freezing protection down to:	Antifreeze percentage [1]	G 11 [2]	W
-25 °C	35 %	3.5 ltr.	6.5
-35 °C	50 %	5.0 ltr.	5.0

[1] The amount of anti-freeze must not exceed 6 %; freezing protection and cooling efficiency wi decrease if anti-freeze percentage is too high.

[2] Coolant capacity can vary depending upon vehicle equipment and options.

- Press top radiator hose down.

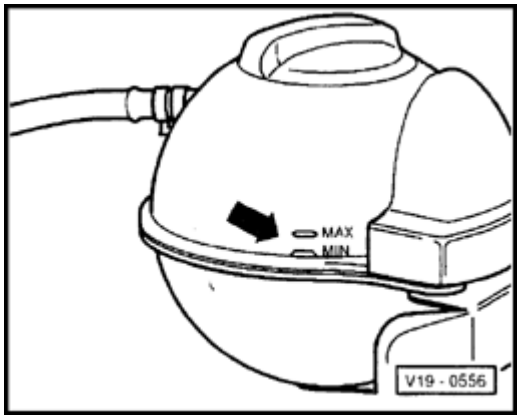

- Fill with coolant up to max. mark on expansi tank.
- Start engine and let idle and at the same tim with coolant up to over-flow on expansion ta
- Install expansion tank cap.
- Run engine until radiator cooling fan cuts-in.
- Check coolant level and top off if necessary. When the engine is at normal operating temperature, the coolant level must be on th max. mark, when the engine is cold, betwee the min. and max. marks.

Radiator and radiator fan, removing and installing

Removing

- Drain coolant ⇒ Page 19-13

- Remove coolant hoses off radiator.

- Disconnect thermal switch and radiator coolant fan connectors.

- Remove radiator mounting bolts.

⇒ *Repair Manual, Body Exterior, Interior, Repair Group 50; Remove lock carrier with attachments*

- Lift out radiator, fan and shrouding.

Vehicles with A/C:

- Observe additional information and removal work ⇒ Page 19-16 .

Installing

Installation is the reverse of removal, when performing, note the following:

- Filling with coolant ⇒ Page 19-13

⇒ *Repair Manual, Electrical Equipment, Repair Group 97; Electrical connections and routing*

- Check headlight alignment and adjust if necessary;

Additional information and removal work for vehicles with A/C

CAUTION!

The A/C refrigerant circuit must not be opened.

Note:

To prevent damage to the condensor, refrigerant lines and hoses, make sure that the lines and hoses are not stretched, kinked or bent.

Repair Manual, 2.8 Liter VR6 2V Fuel Injection & Ignition, Repair Group 20, ⇒ Page 20-21 ; Disconnect EVAP canister purge regulator valve 1 -N80- with retaining ring from air cleaner lower section

⇒ *Repair Manual, 2.8 Liter VR6 2V Fuel Injection & Ignition, Repair Group 24; Remove air cleaner housing complete with Mass Air Flow sensor -G70-*

- Remove A/C receiver/dryer and allow to hang free.
- Remove retaining clamp(s) from refrigerant lines.
- Remove condenser from radiator and pull as far forward as possible.
- Lift out radiator and fan.
- Secure condenser to body such that refrigerant lines and hoses are not stressed.

Coolant pump, removing and installing

Removing

- Switch off ignition.

- Disconnect battery ground cable

Note:

Obtain the radio anti-theft code from the customer before disconnecting the battery.

- Disconnect exhaust pipe from the three-way catalyst flange ⇒ Page 26-2 .

- Drain coolant ⇒ Page 19-13

- Remove ribbed belt ⇒ Page 13-20 .

⇒ *Repair Manual, 2.8 Liter VR6 2V Fuel Injection & Ignition, Repair Group 24; Remove intake hose*

19-18

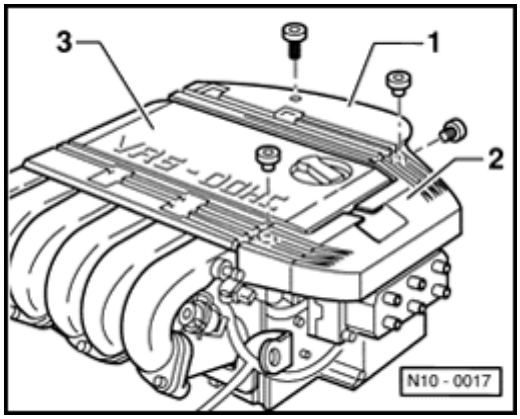

- Disconnect ignition wires out of ignition coil and unclip from the ignition wiring guide -2-.
- Remove the ignition wiring guide -2-.
- Disconnect vacuum hose between intake manifold upper section and fuel pressure regulator
- Remove Intake Air Temperature sensor from intake manifold upper section.
- Detach coolant expansion tank and place to side; hoses remain connected.

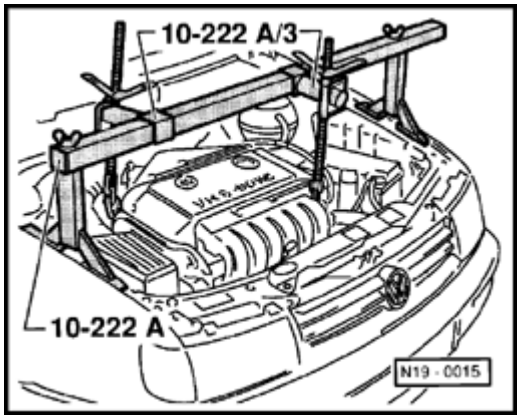

- Install engine support bracket 10-222 A with adapter 10-222A/3.
- Locate support bracket in lifting eyes on left and right of cylinder head and take-up weight of engine.
- Detach transmission at left rear assembly mounting and engine at right rear assembly mounting.

19-19

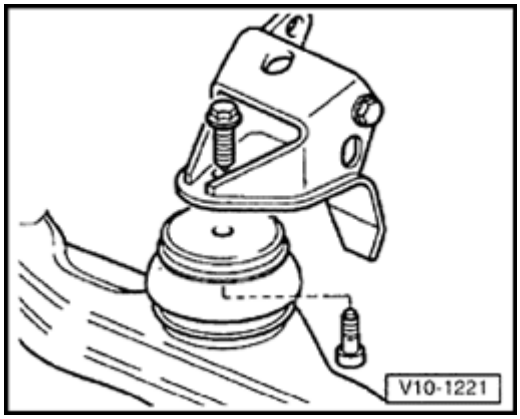

- Detach engine from front engine/trans mount from above.
- Carefully lift engine.
- Remove coolant pump pulley (use VAG 1590 to loosen and tighten the mounting bolt).

Note:

If necessary modify water pump wrench VAG 1590 ⇒ Page 19-9 , ⇒ Fig. 1.

- Remove coolant pump.

Note:

To remove and install the coolant pump, push engine by hand slightly to left, to gain clearance for removing and installing.

Installing

Installation is the reverse of removal, when performing, note the following:

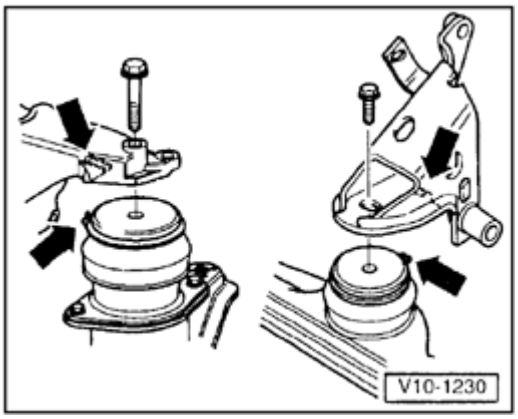

- When installing the right-rear and front engine/trans mounts, make sure that the recess on the right-rear console and the recess on the front console locates on the rubber mount -arrows-.
- Screw in all bolts on engine and trans mounts by hand approx. 5...6 turns.

- Align engine mounts stress-free by rocking engine assembly.

- First tighten assembly mountings front and right-rear, then tighten left-rear assembly mounting, ⇒ Page 10-11 .

⇒ *Repair Manual, 2.8 Liter VR6 2V Fuel Injection & Ignition, Repair Group 24; Install intake hose*

- Installing ribbed belt ⇒ Page 13-20 .

- Filling with coolant ⇒ Page 19-13

Tightening torques

Component	Tightening torque
Coolant pump to cylinder block	20 Nm (15 ft lb)
Pulley to coolant pump	25 Nm (18 ft lb)
Coolant expansion tank to body	10 Nm (7 ft lb)
Intake Air Temperature sensor to intake manifold upper section	15 Nm (11 ft lb)
Drain plug in coolant pipe	10 Nm (7 ft lb)
Front exhaust pipe to three-way catalyst	25 Nm (18 ft lb)

19-21

Coolant after-run system, checking

- Remove cover above thermostat housing.

- Switch on ignition and then switch off again.

- Disconnect 4-pin harness connector from Af
  Run Coolant Fan Control Thermal switch -F8
  with Engine Coolant Temperature sensor -G
  yellow-.

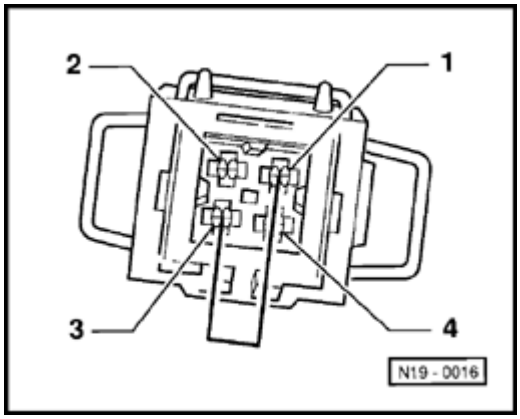

- Bridge terminals -1- and -3- of connector
  (brown/red and brown wires) with jumper wir
  from VW 1594 adaptor kit.
  - Coolant fan -V7- and after-run coolant p
    -V51- must run.

Note:

Check coolant fan after-run using VAG 1466 te
see the wiring diagram.

Fuel supply system components, removing and installing

Notes:

- *Hose connections are secured with either screw, clamp or spring-type clips.*
- *Always replace clamp-type clips with screw or spring type clips.*
- *Fuel hoses in engine compartment must be secured with spring type clips. The use of clamp or screw type clips is not permissible.*
- *For installing spring-type clips, commercial pliers such as Hazet 798-5 are recommended.*

Observe safety precautions ⇒ Page 20-9

Observe rules for cleanliness ⇒ Page 20-10

Adjusting throttle cable ⇒ Page 20-11

20-2

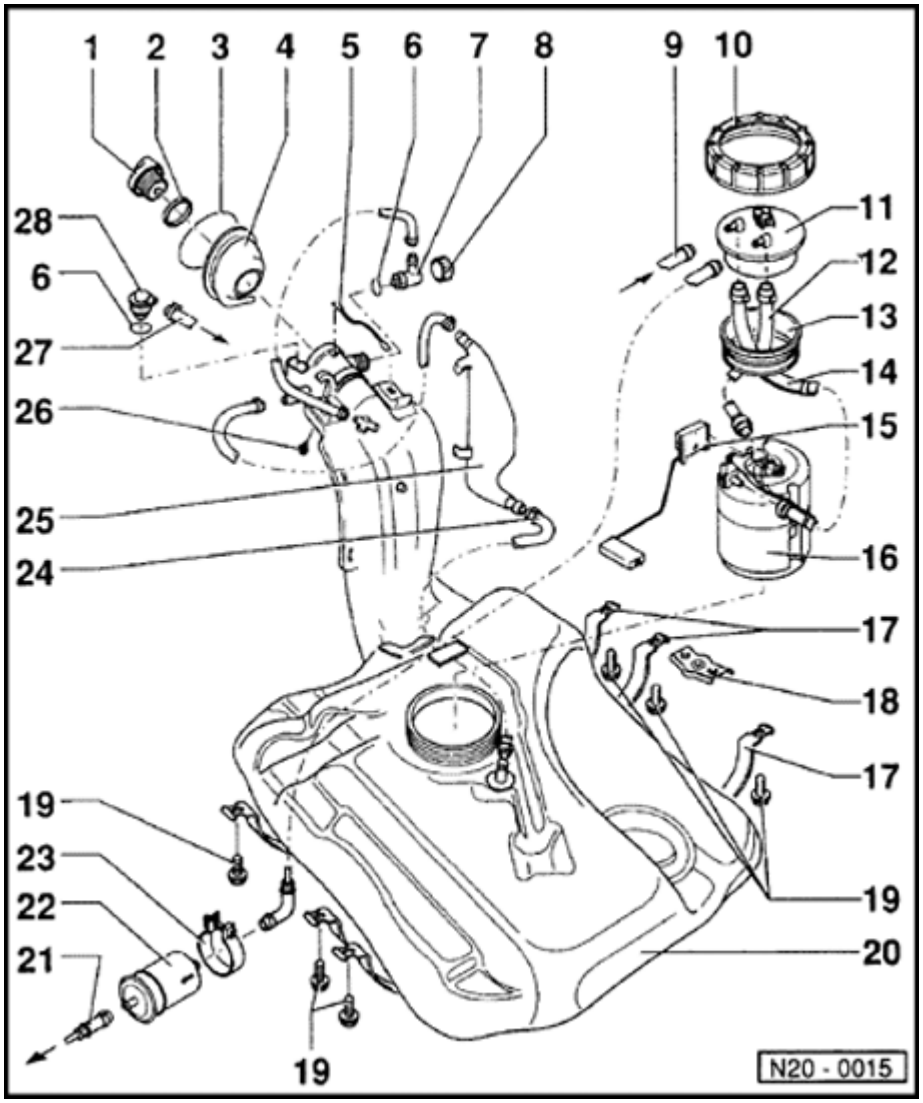

Fuel tank assembly and fuel filter, removing and installing

Front wheel drive vehicles

1 - Cap

2 - Seal

- Replace if damaged

3 - Retaining ring

4 - Rubber cup

5 - Ground connection

6 - O-ring

- Replace if damaged

7 - Vent valve

- Checking ⇒ Page 20-7 , ⇒ Fig. 2

8 - Union nut

20-3

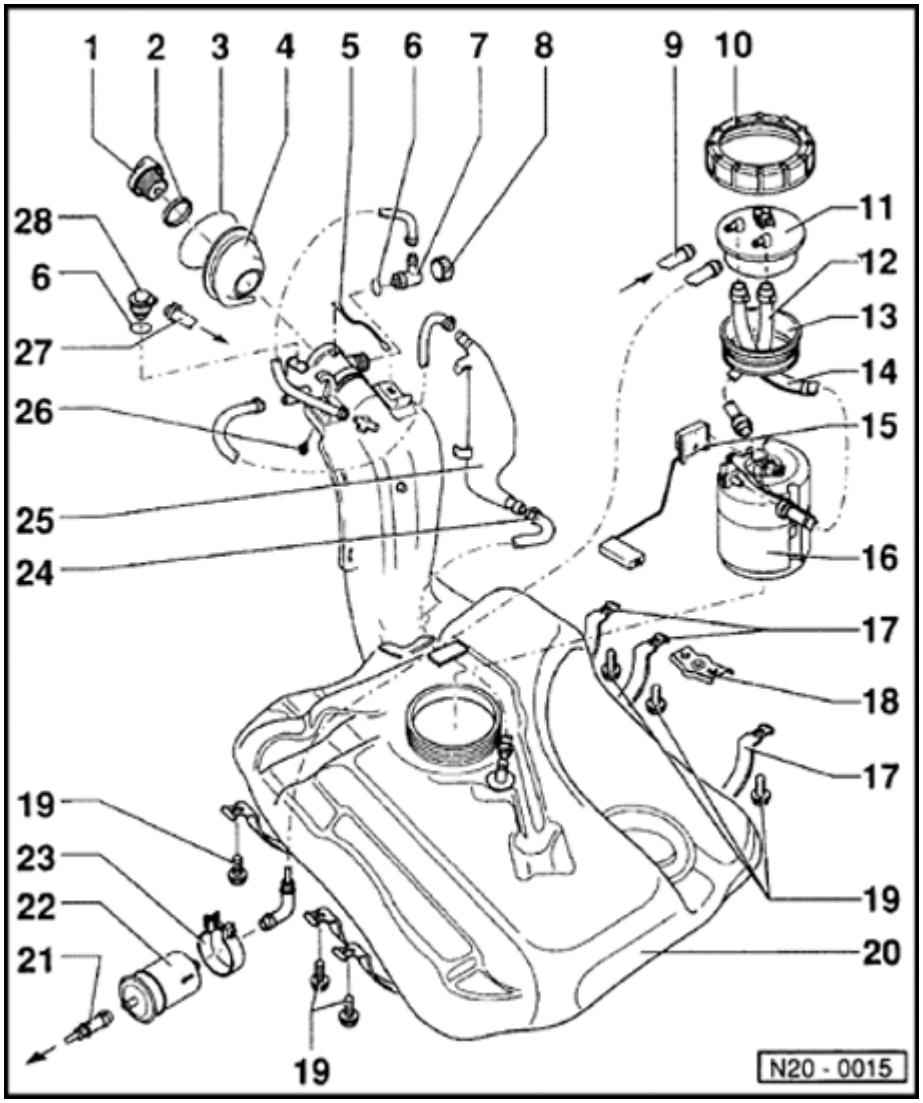

9 - Return line

- Blue
- From fuel rail

10 - Union nut

- Remove and install with 3217

11 - Flange

- Note installed position on fuel tank ⇒ Page 20-7 , ⇒ Fig. 1

12 - Supply hose

13 - Sealing ring

- Coat with fuel when installing
- Replace if damaged

14 - Return hose

20-4

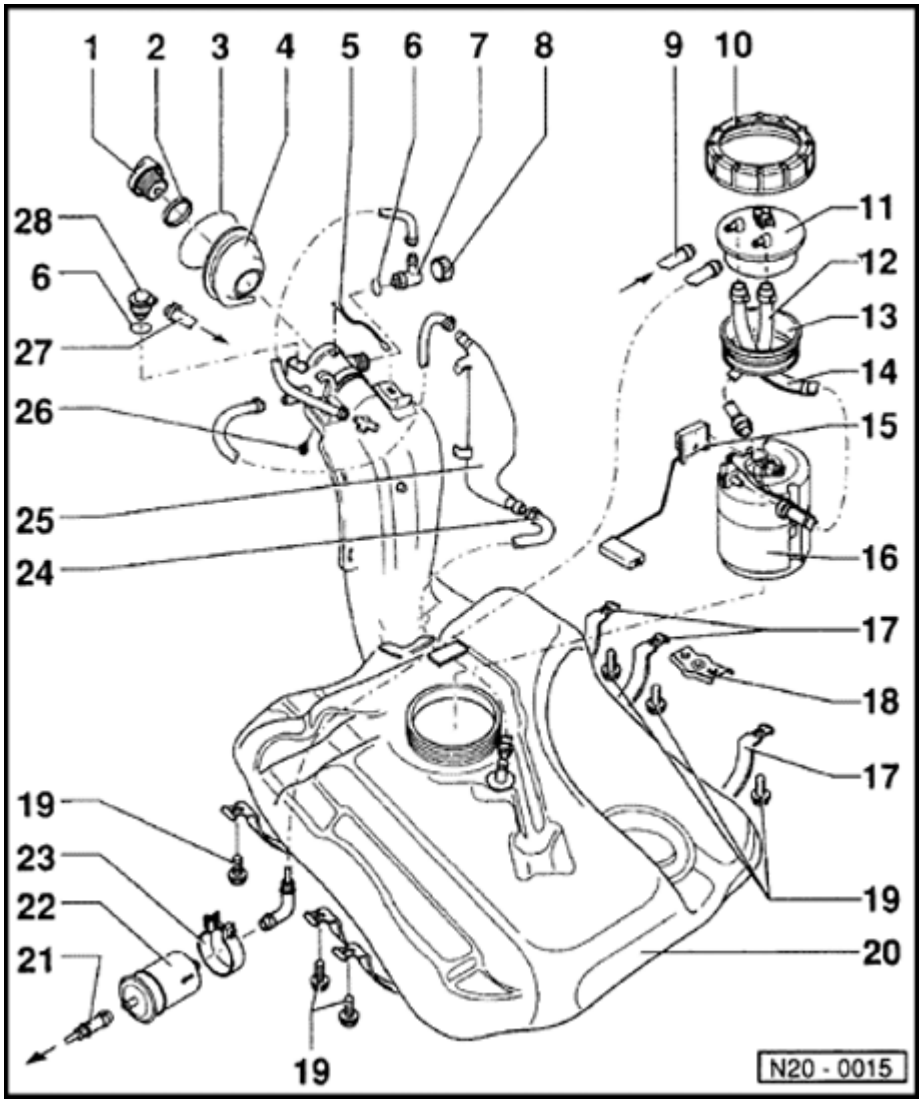

15 - Fuel level sensor

16 - Fuel pump

- Removing and installing ⇒ Page 20-13
- Fuel pump, checking ⇒ Page 20-16

17 - Securing strap

- Note differing lengths

18 - Bracket

- For securing straps

19 - 25 Nm (18 ft lb)

20 - Fuel tank

- Support with engine and transmission jack VAG 1383 A when removing

20-5

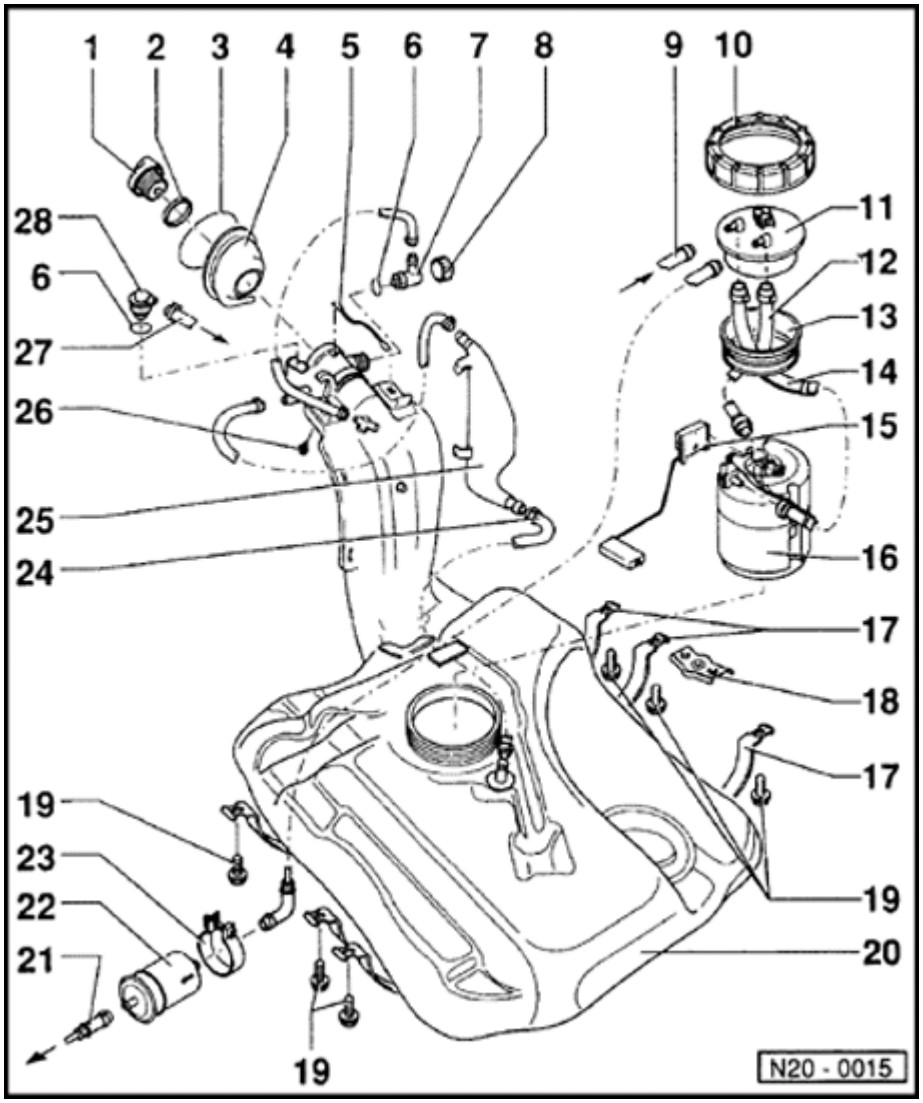

21 - Supply line

- Black
- To fuel rail

22 - Fuel filter

- Installed position: Arrow points in direction of flow

23 - Retaining clip

24 - Vent hose

- Fuel tank vent shown: Sedan
- Fuel tank venting for Wagon ⇒ Page 20-9 , ⇒ Fig. 3

25 - Reservoir

- Type shown: Sedan
- Type for Wagon ⇒ Page 20-9 , ⇒ Fig. 3

20-6

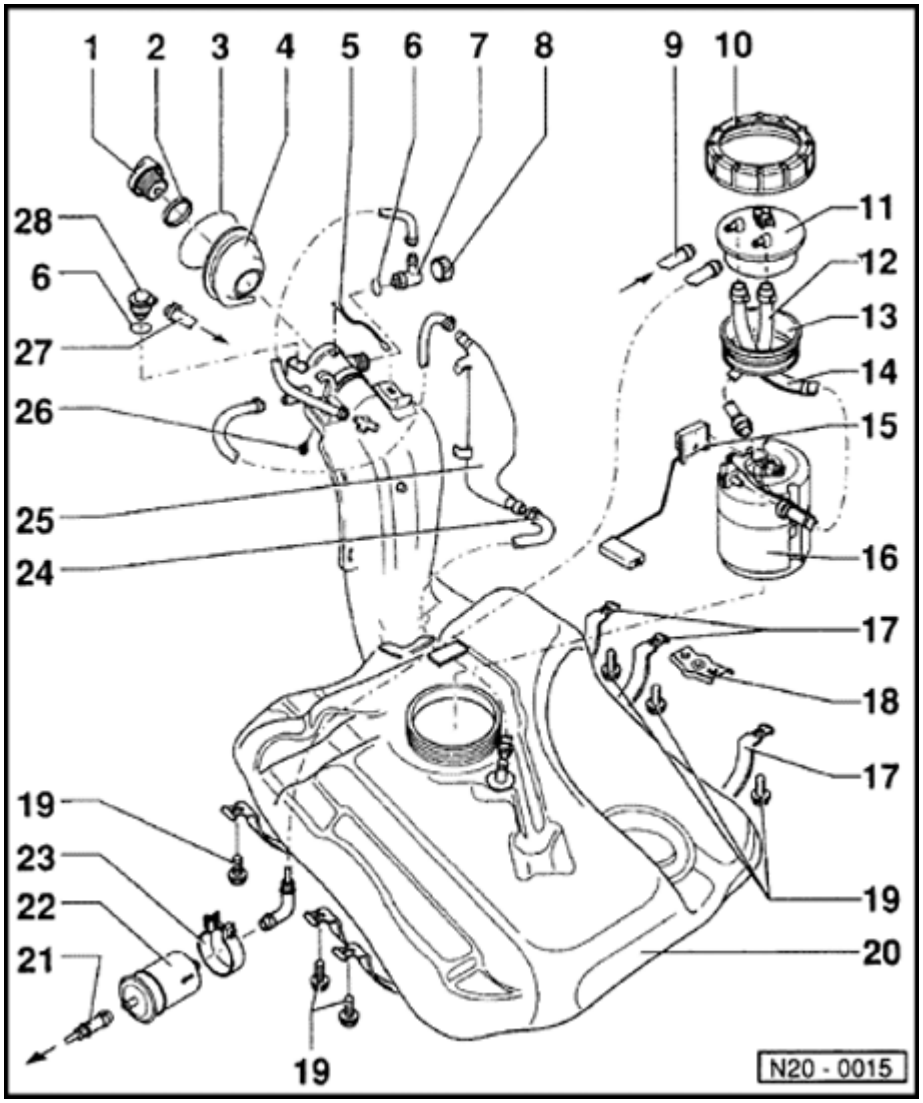

26 - 10 Nm (7 ft lb)

27 - Vent line

- To EVAP canister ⇒ Page 20-21 , item 1

28 - Gravity valve

- To remove valve, unclip upward out of filler neck
- Check valve for flow valve vertical: open, valve tilted 45 °: closed

20-7

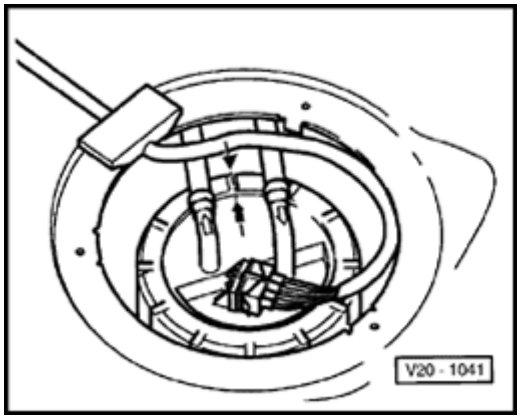

Fig. 1 Installed position of fuel pump flange assembly on fuel tank

Marking on the flange must align with marking on the fuel tank.

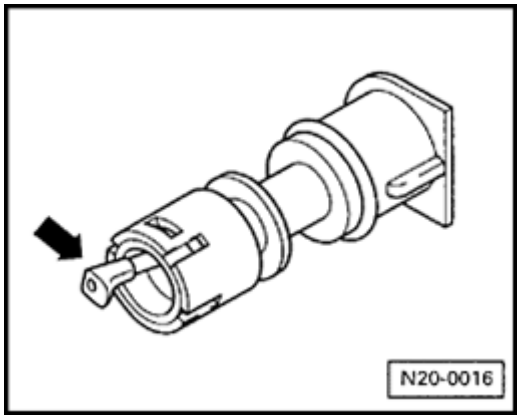

Fig. 2 Checking vent valve

Lever in rest position: Closed

Lever pushed in direction of arrow: Open

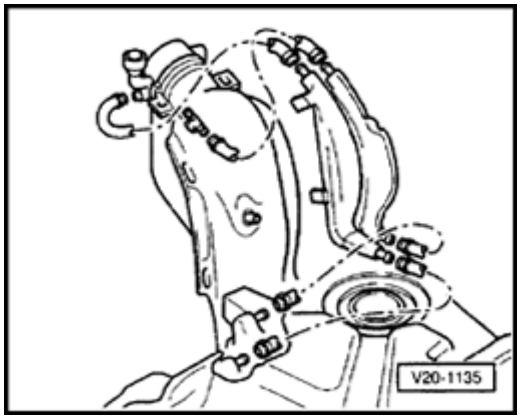

Fig. 3 Fuel tank venting for the Wagon

Safety precautions when working on the fuel supply system

When removing and installing the fuel level sensor or fuel pump (fuel delivery unit) from a full or partially filled fuel tank the following must be observed:

- Before starting work, switch on exhaust extraction system and place an extraction hose close to the opening in the fuel tank to extract escaping fuel vapors. If no exhaust extraction system is available, a radial fan (motor NOT in air flow path) with a displacement greater than 530 ft^3/h can be used.

- Prevent skin contact with fuel! Wear fuel-resistant gloves!

Rules for cleanliness

When working on the fuel supply and injection system, observe the following "5 rules":

- Thoroughly clean all unions and adjacent areas before disconnecting.
- Place parts that have been removed on a clean surface and cover. Do not use fluffy cloths!
- If the repair cannot be carried out immediately. Carefully cover opened components or seal.
- Only install clean components:

  Only unpack replacement parts prior to installation.

  Do not use parts that have been stored loose (e.g. in tool boxes etc.).
- When the system is open:

  Do not apply compressed air if it can be avoided.

  Do not move vehicle unless absolutely necessary.

20-11

Throttle cable, adjusting

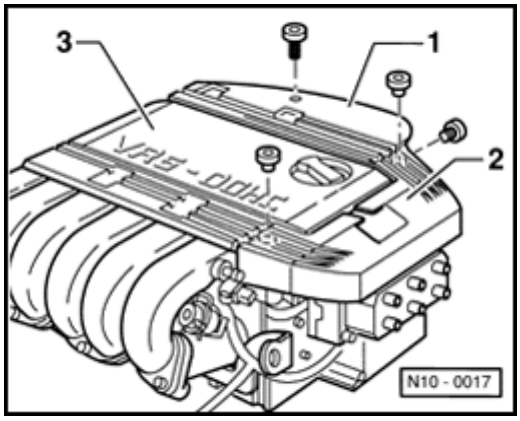

- Remove spark plug connectors and ignition wires.
- Remove ignition wire guides -1- and -2-.
- Remove cover above intake manifold upper section -3-.

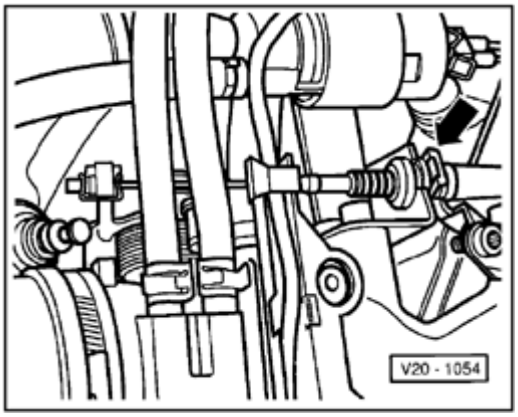

Vehicles with manual transmission

- Adjust throttle cable by moving the retaining clip- arrow- at the support bracket, such that the Wide Open Throttle position is obtained at the throttle body.

Vehicles with automatic transmission

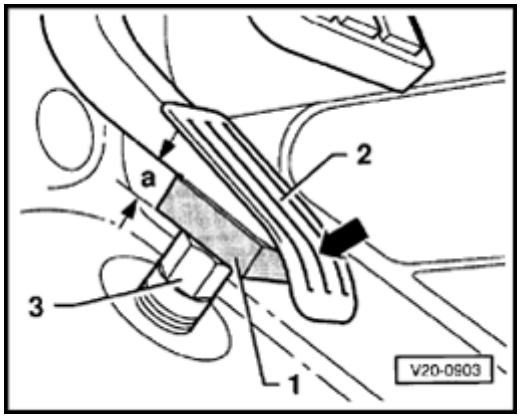

- Clamp distance piece -1-, a = 15 mm, between accelerator pedal -2- and stop -3- and hold accelerator pedal in this position.

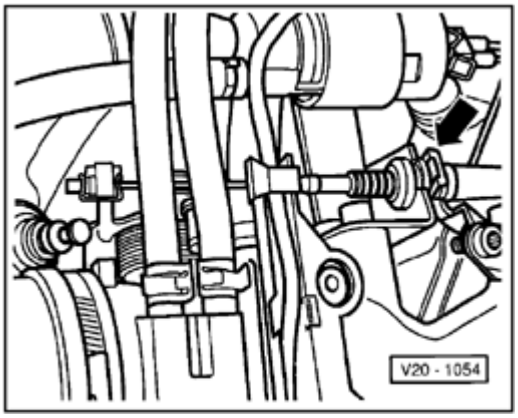

- Fully open throttle by pulling on the outer cable and secure in this position using the retaining clip - arrow-.
- Release accelerator pedal.
- Disconnect 2-pin harness connector from Kick-Down switch -F8- in engine compartment (on bulkhead).

20-13

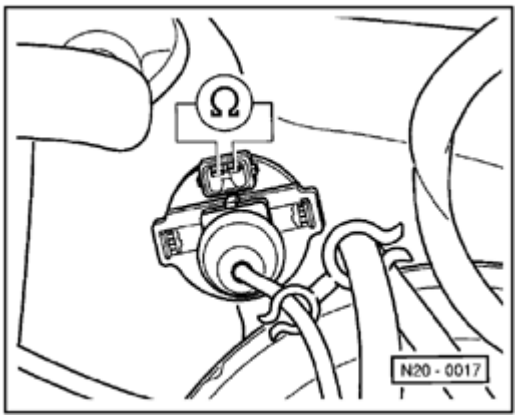

- Connect Fluke 83 multimeter to kick-down switch using jumper wires from VW 1594 adaptor kit.
- Check resistance at switch.

  Specification: ∞ Ω
- Slowly move accelerator pedal in direction of wide open throttle.

Shortly after the kick-down pressure point the resistance must drop to:

O Ω

At this point the accelerator pedal must be just off the stop.

Fuel pump assembly, removing and installing

Removing

- Observe safety precautions ⇒ Page 20-9

- Switch off ignition.

- Disconnect battery ground cable.

Note:

Obtain the radio anti-theft code from the customer before disconnecting the battery.

- Remove luggage compartment floor cover.

20-15

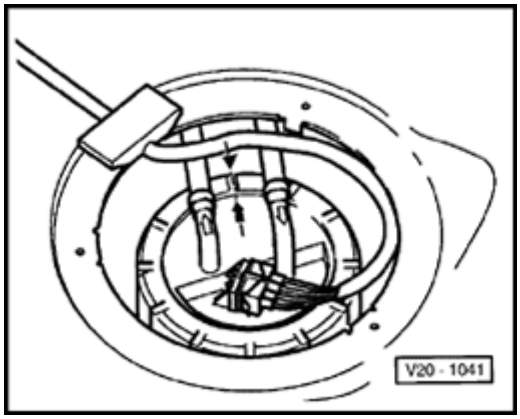

- Disconnect 4-pin connector and supply and return lines from the fuel pump assembly at the flange.
- Loosen the flange nut using 3217.
- Remove the flange nut and seal from the fuel tank opening.
- Release fuel pump assembly by turning assembly to the left in bayonet connection and remove.

Note:

If the fuel pump assembly still contains fuel, empty it before replacing.

Installing

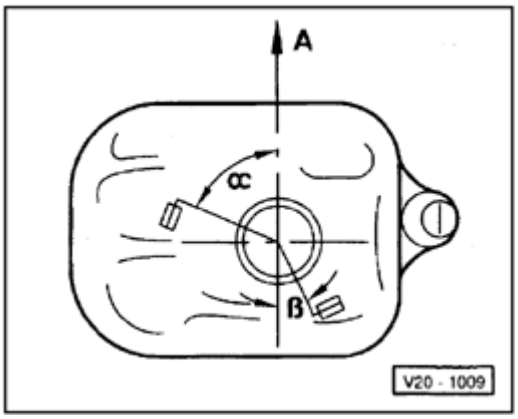

- Fuel pump assembly installation is the reverse of the removal procedure.

Notes:

- *When inserting the fuel pump assembly make sure that the fuel level sensor is not bent.*
- *When the fuel pump assembly is correctly installed, the fuel level sensor float orientation with reference to arrow A must be:*

α = Wagon: 5...10 °

α = Sedan: 70...75 °

- *Coat flange seal with fuel when installing.*
- *Installed position of fuel pump assembly* ⇒ *Page 20-7* , ⇒ *Fig. 1*

Fuel pumps, checking

- Battery voltage OK.
- Fuse No.18 0K.

- Switch on ignition.

- Fuel pump must run briefly (and be audible).

If the fuel pumps do not run:

- Switch off ignition.

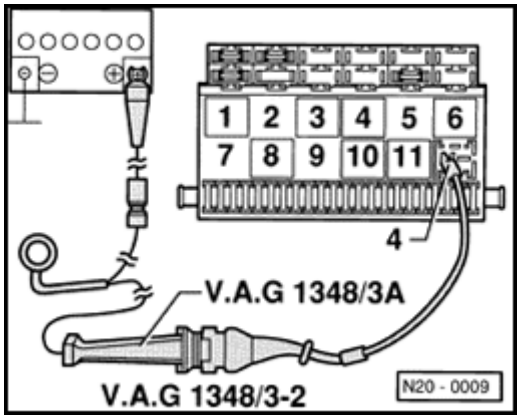

- Pull off cover in front of fuse/relay panel.
- Remove the fuel pump relay -J17- from fuse/relay position 12.

Notes:

- *If tools are necessary to pull relays or control modules out of the fuse/relay panel, first disconnect battery ground wire.*
- *Obtain radio anti-theft code from customer before disconnecting battery ground wire.*

- Connect remote control VAG 1348/3A using adaptor cable VAG 1348/3-2 between termir and battery positive (+).

- Operate remote control.

If fuel pump runs:

- Re-install fuel pump relay.

⇒ *Repair Manual, 2.8 Liter VR6 2V Fuel Injecti & Ignition, Repair Group 01; Check activation c fuel pump relay*

If fuel pump does not run:

- Remove access cover in luggage compartme floor.

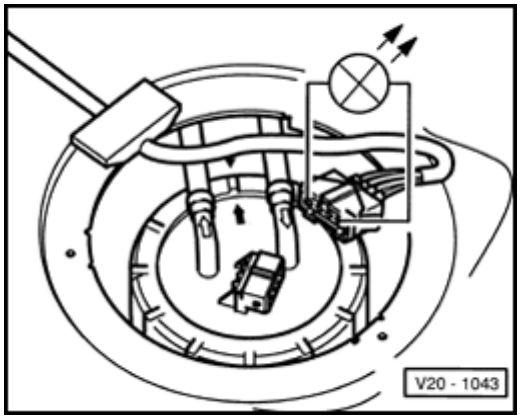

- Disconnect 4-pin harness connector from fue pump assembly at flange.
- Connect VAG 1 527B LED tester to the oute terminals of the connector using jumper wire from VW 1594 adaptor kit.
- Operate remote control. LED must light up

If LED does not light up:

- Locate and eliminate open circuit using wirin diagram:

LED lights up (voltage supply OK.):

- Loosen flange nut using 3217.

- Check if the wiring between harness and fue pump assembly is connected.

If no open circuit can be found:

- Replace fuel pump ⇒ Page 20-13 .

Delivery rate, checking

- Voltage supply OK.

- Remote control VAG 1348/3A connected.

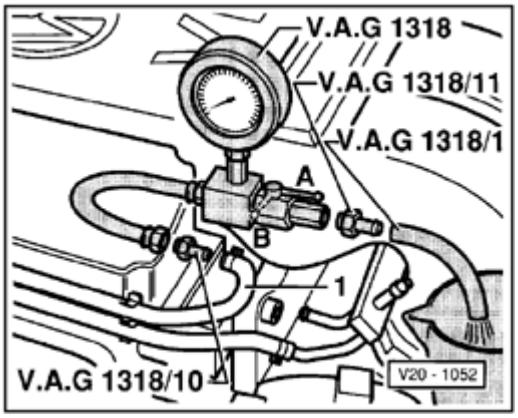

- Remove fuel filler cap.
- Disconnect fuel supply hose -1- from fuel rai

Note:

To prevent fuel spray when loosening connecti wrap a cloth around the connection.

- Connect pressure gauge VAG 1318 using adapter 1318/10 on fuel supply hose -1-.

20-19

- Push hose adaptor VAG 1318/1 onto pressu gauge adaptor VAG 1318/11 and hold in measuring container.

- Open pressure gauge shut-off (lever in direc of flow - position -A-).

- Operate remote control VAG 1348/3A and slowly close shut-off lever, until the gauge indicates 4 bar. Leave the shut-off lever in th position.

- Empty measuring container.

- Operate remote control for 30 seconds.

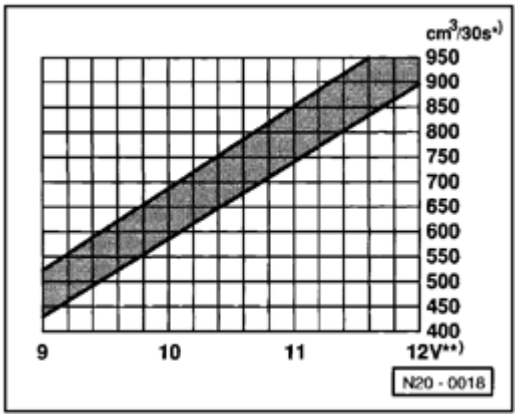

- Compare amount of fuel delivered with chart left. *) Minimum delivery in cc's per 30 secon **)Voltage at fuel pump with engine stationar and pump running (approx. 2 Volts less than battery Voltage).

If the minimum delivery rate is not attained:

- Check for kinked or blocked fuel lines.
- If fuel filter is blocked, replace ⇒ Page 2 5 , item 22 .
- If fuel pump is faulty, replace ⇒ Page 2(13 .

20-20

Fuel pump check valve, checking

- Remote control VAG 1348/3A connected
- Pressure gauge VAG 1318 connected

Note:

With this check the fuel supply line connections from the fuel pump to the point at which the pressure gauge VAG 1318 is connected will be checked for leaks at the same time.

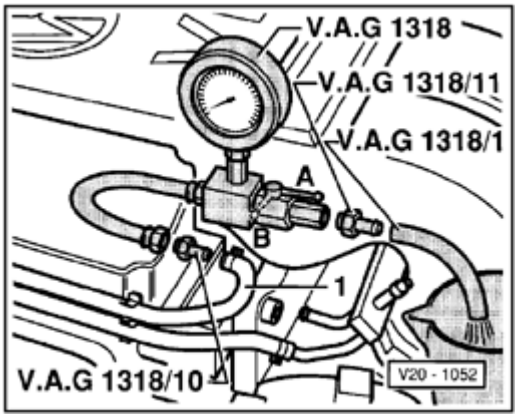

- Close pressure gauge shut-off (lever at right angle to flow position -B-).
- Operate remote control at short intervals, until a pressure of approx. 4 bar has built-up.
- If pressure exceeds 4 bar, lower excess pressure by carefully opening the shut-off lever

CAUTION!

Danger of fuel over-spray when opening the tester shut-off, hold a container or lint-free rag over the tester open connection.

- Observe pressure drop.
  - After 10 minutes, pressure must not drop below 3 bar

If necessary check line connections for leaks and/or replace fuel pump ⇒ Page 20-13 .

20-21

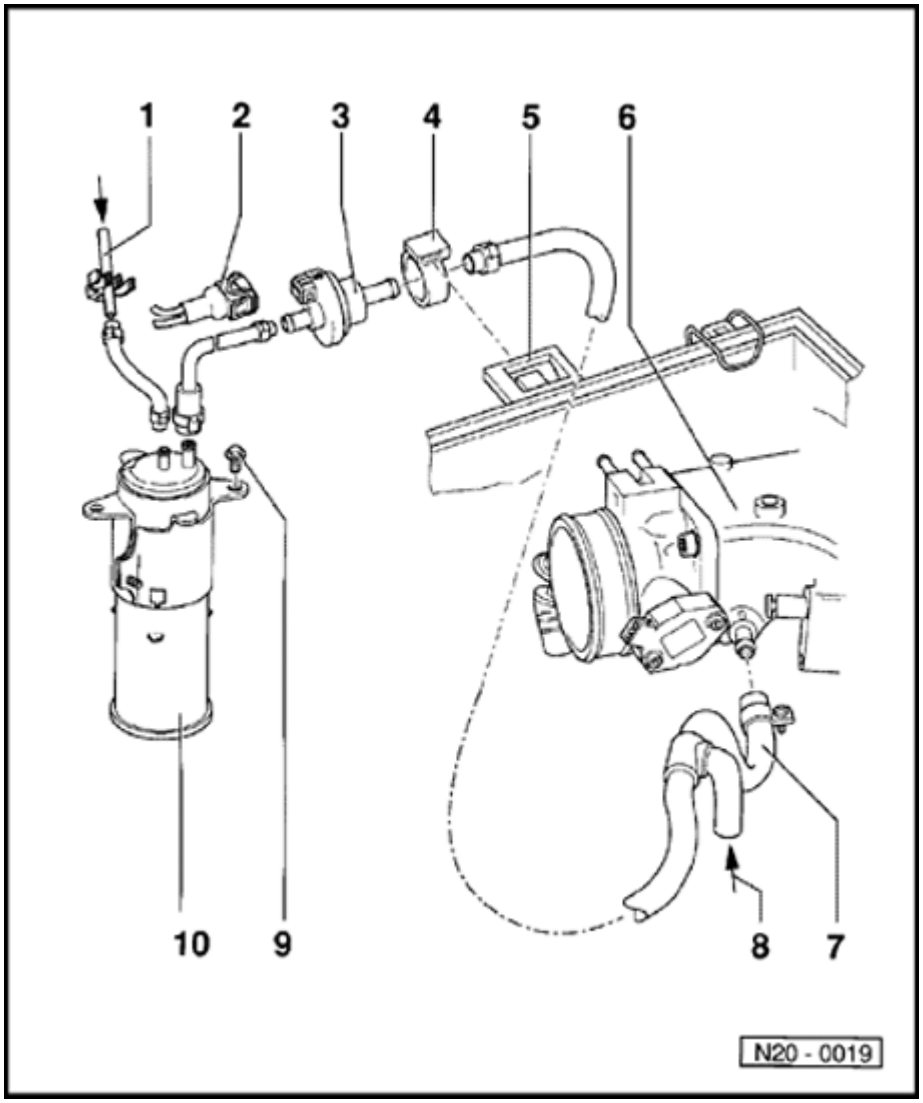

EVAP system components, removing and installing

1 - Vent line

- From gravity valve on fuel tank ⇒ Page 20-6 , item 27

2 - Harness connector

- 2-pin

3 - EVAP canister purge regulator valve 1 - N80-

- With ignition switched off, valve open in direction of arrow
- With engine warm, valve will be activated by Motronic ECM - J220- (pulsed)

⇒ *Repair Manual, 2.8 Liter VR6 2V*

Fuel Injection & Ignition, Repair Group 01; Checking

20-22

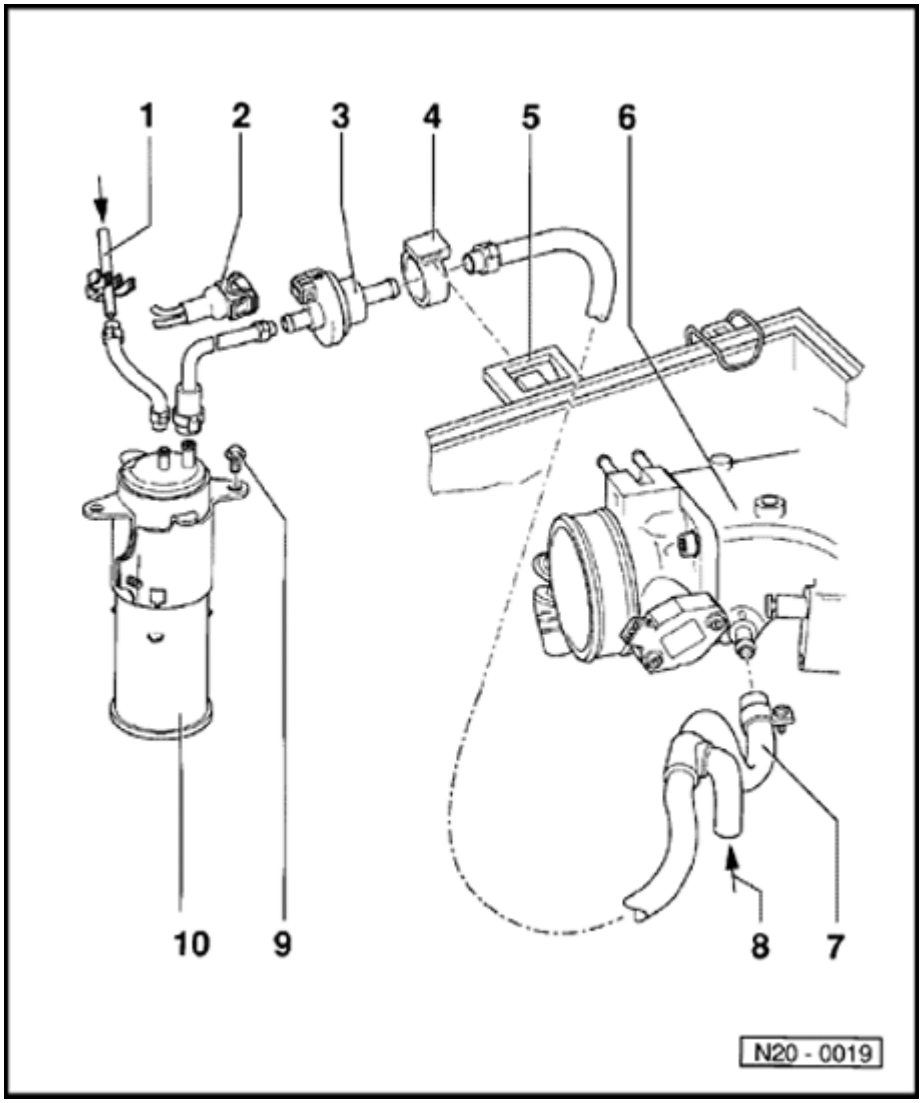

4 - Retaining ring

5 - Bracket

- On air cleaner lower section

6 - Intake manifold upper section

7 - Vent hose

8 - From crankcase breather valve

9 - 10 Nm (7 ft lb)

10 - EVAP canister

- Located in right front wheel housing

⇒ *Repair Manual, 2.8 Liter VR6 2V Fuel Injection & Ignition, Repair Group 24; To remove, first remove Air Cleaner housing assembly (with Mass Air Flow sensor -G70-*

20-23

Fuel tank ventilation, checking

Uses special tools, testers and resources

- Hand vacuum pump US 8026 ((VAG 1390)
- Vacuum tester VAG 1397A (the VAG 1368 tester shown in the illustration is not intended for the North American market)

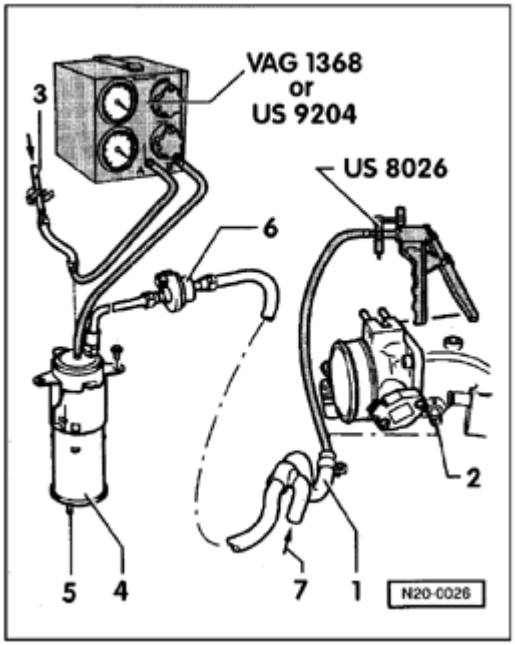

Test Conditions:

- Ignition switched off

Test Procedure

- Remove air cleaner
- Remove vent hose -1- to EVAP canister purge regulator valve -6- on throttle body -2-
- Close on vehicles with crankcase ventilation valve connector -7-
- Connect hand vacuum pump US 8026 to hose -1-
- Remove vent hose -3- from fuel tank on EVAP canister -4- and connect with vacuum pressure tester VAG 1397A Connector A
- Connect vacuum pressure tester VAG 1397A -Connection B- with connector to EVAP canister

20-24

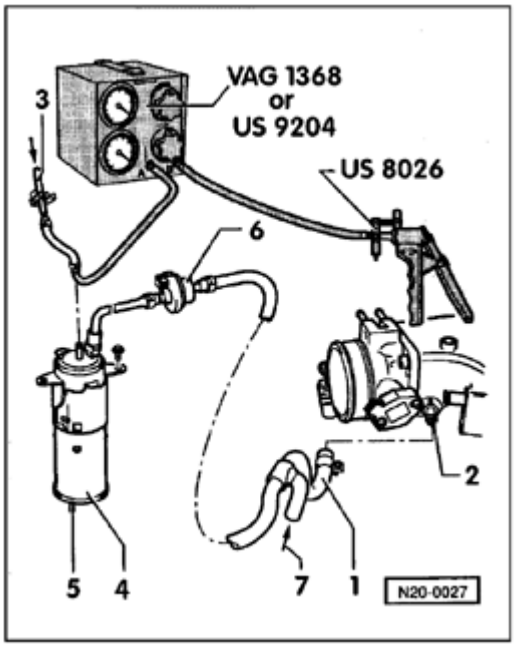

- Place vacuum pressure tester in position B.

- Activate hand vacuum pump several times. Pressure should not build up. If pressure bui up:

- Check vent fitting -5- on EVAP canister -4- f contamination, clean if necessary
- Check EVAP canister purge regulator valve N80- -6- for continuity, replace if necessary.

  If pressure does not build up:

- Remove fuel filler cap
- Connect hand vacuum pump US 8026 to vacuum tester VAG 1397A Connector B.
- Place vacuum pressure tester in position -A/
- Activate hand vacuum pump several times. Vacuum should not build up.

  If vacuum builds up:

- Check gravity valve ⇒ Page 20-6 , Item 28
- Check wire -3- from fuel tank for continuity

  If pressure does not build up:

- Install fuel filler cap

20-25

- Activate hand vacuum pump several times. Vacuum should not build up

Note:

With low fuel levels in the fuel tank, the hand vacuum pump must be operated at least 20...30 times.

If pressure builds up:

- Replace fuel filler cap.

26-1

Exhaust system components, removing and installing

Front wheel drive vehicles

Notes:

- After working on the exhaust system, make sure that the system is not under stress, and it has sufficient clearance from the body. If necessary, loosen the double and single clamps and align the muffler and exhaust pipes so that sufficient clearance is maintained from the body while leaving the exhaust hangers evenly loaded.

- Replace self-locking nuts.

26-2

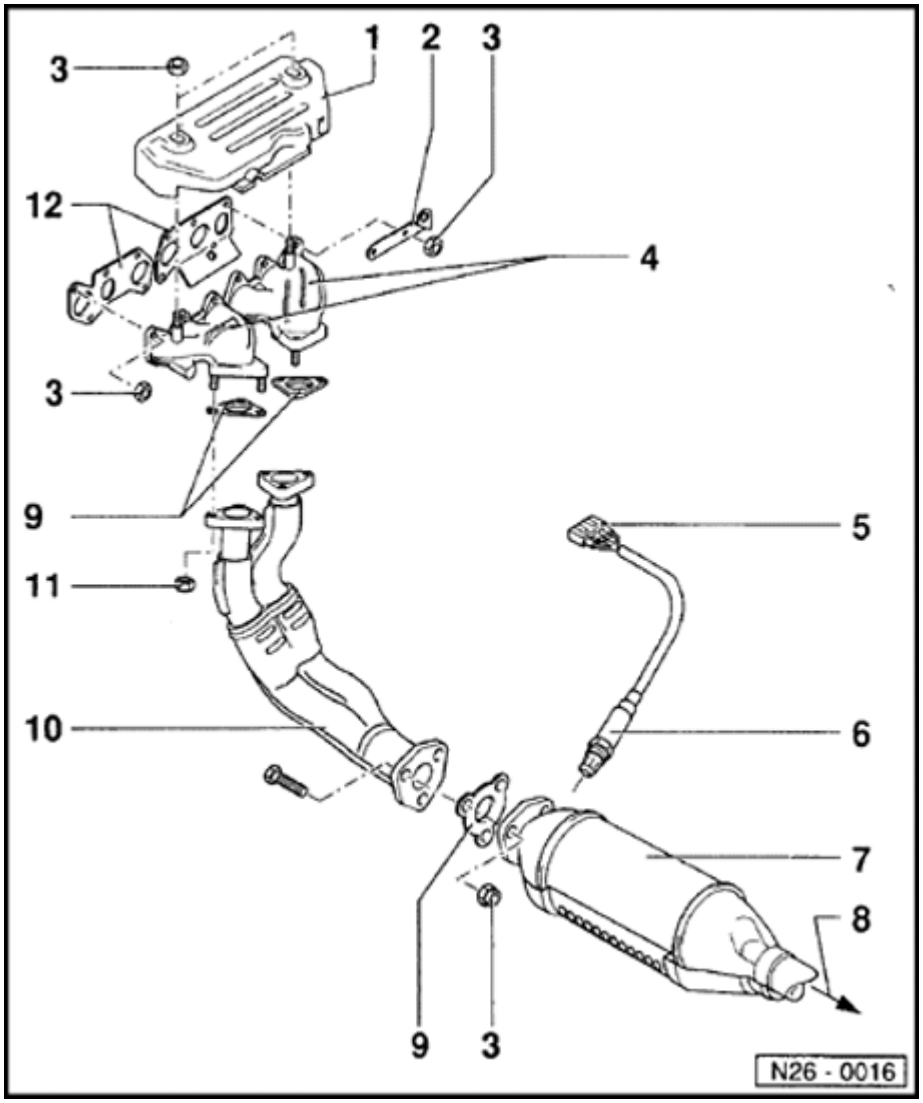

Exhaust manifold, front exhaust pipe and three-way catalyst assembly, component layout

1 - Heat shield

2 - Lifting eye

3 - 25 Nm (18 ft lb)

4 - Exhaust manifold

♦ 2 part

26-3

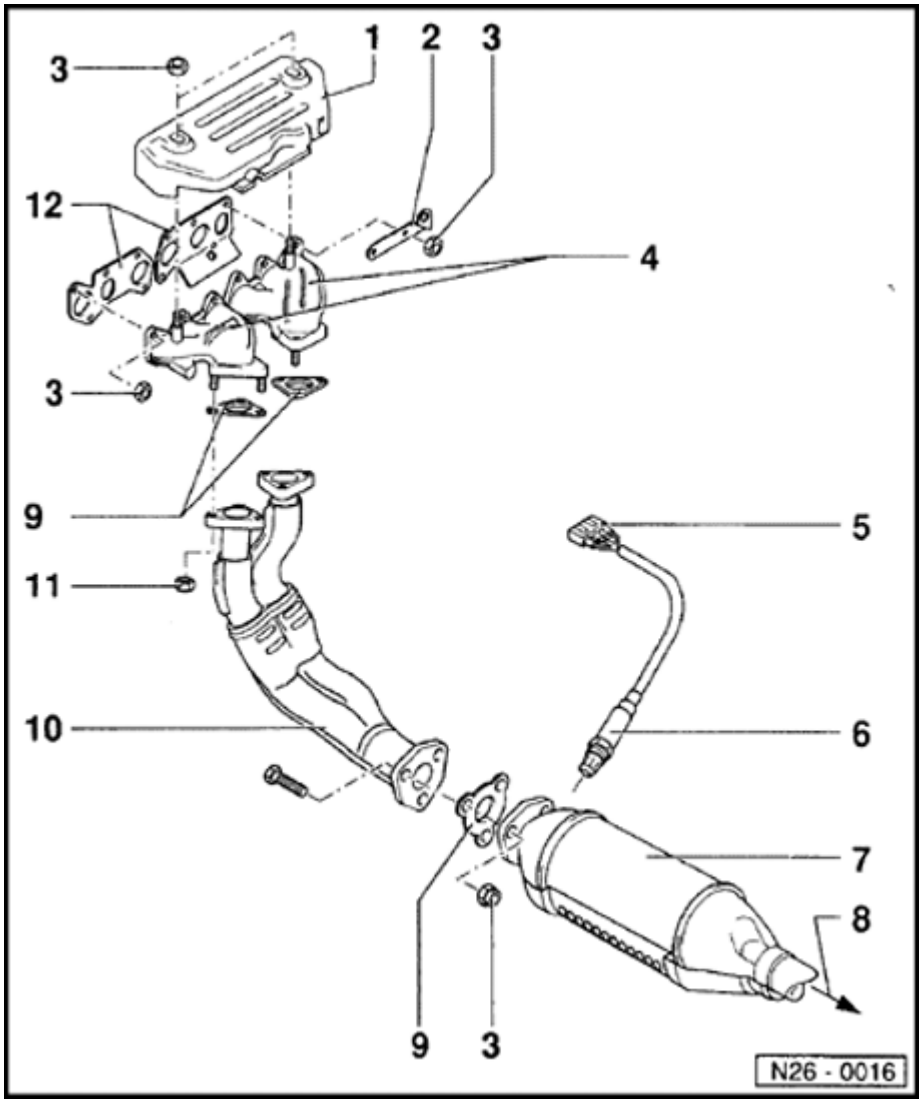

5 - Connector

- 4 pin
- For Heated Oxygen sensor and Oxygen sensor heater
- Secured to the right rear engine and trans mount
- Check Heated Oxygen sensor basic heater Voltage

⇒ *Repair Manual, 2.8 Liter VR6 2V Fuel Injection & Ignition, Repair Group 01; Oxygen sensor heating, voltage supply checking*

26-4

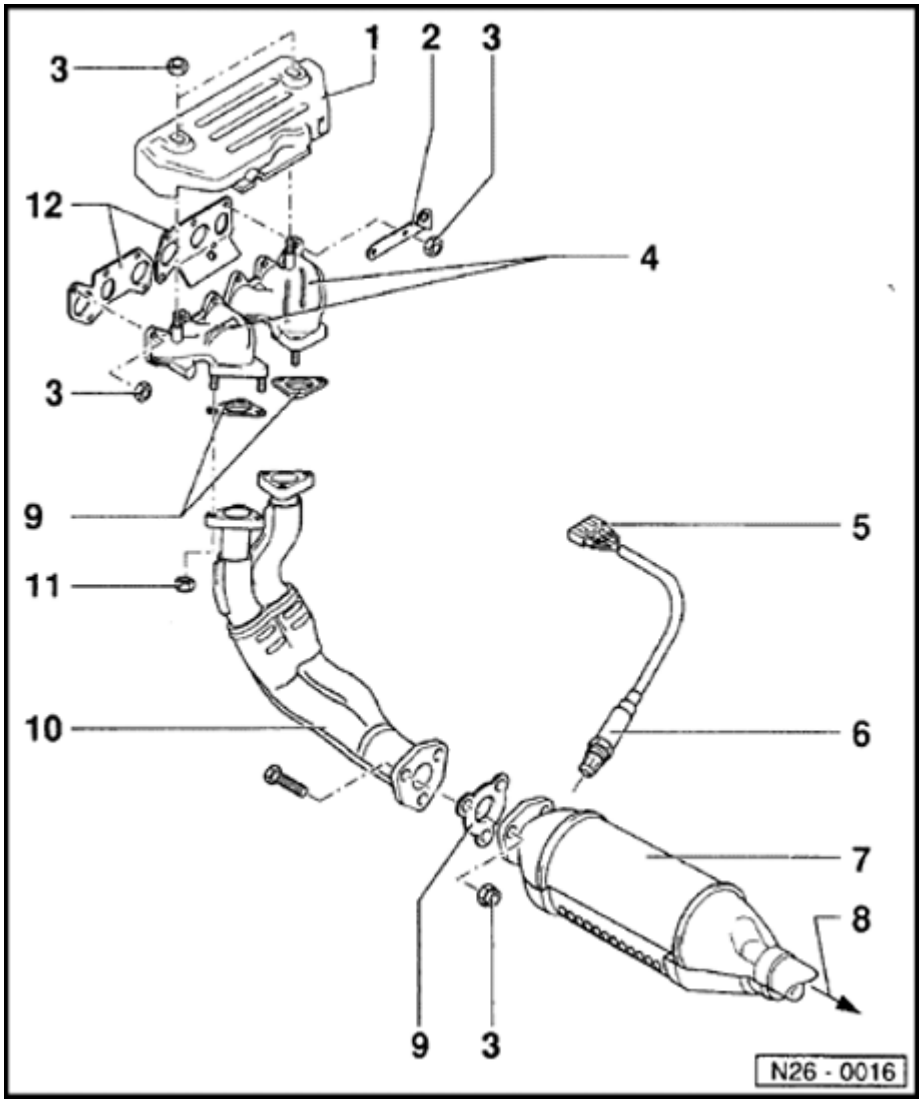

6 - Heated Oxygen sensor - G39-

- 50 Nm (37 ft lb)
- Only grease threads with "G5"; do NOT allow "G5" to get into the slots on the sensor
- Checking

7 - Three-way catalyst

8 - To front muffler

- ⇒ Page 26-8 , item 19

9 - Gasket

- Always replace

10 - Front exhaust pipe

11 - 40 Nm (30 ft lb)

12 - Gasket

- 2 part
- Always replace

26-5

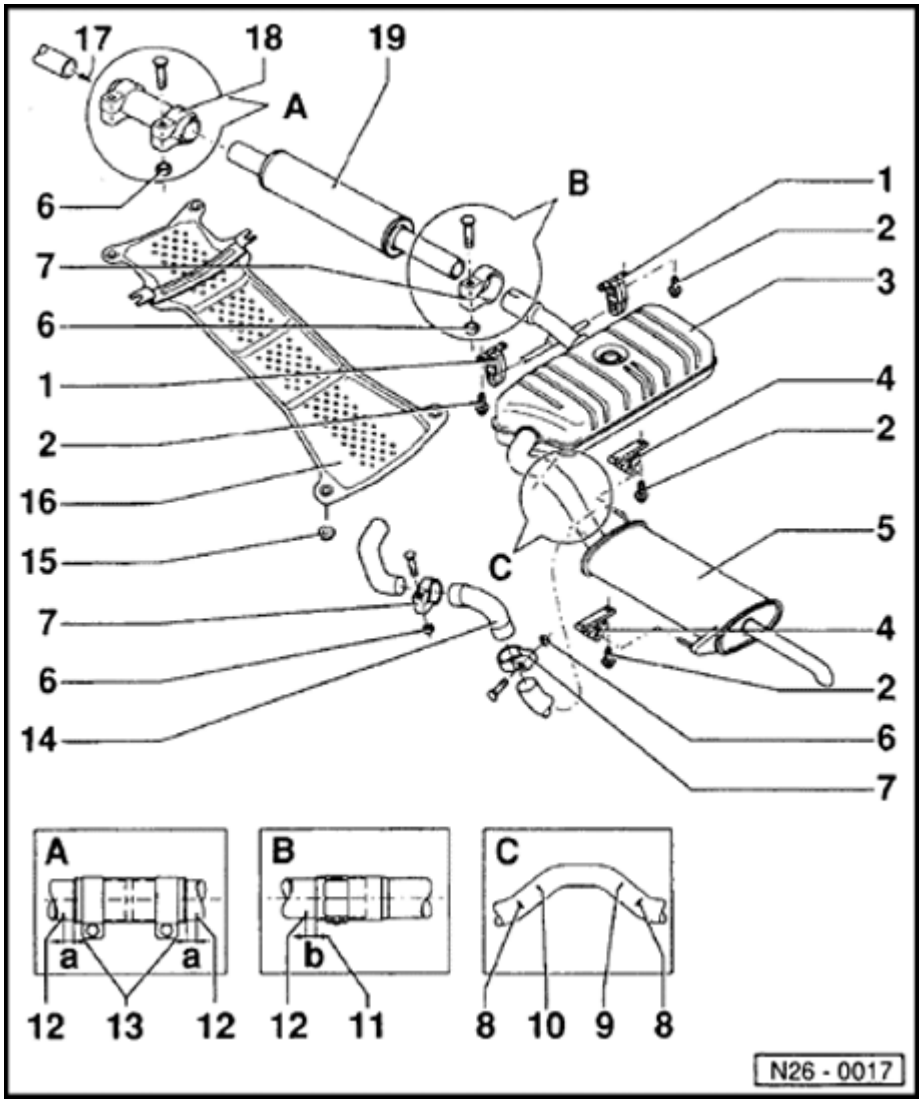

Muffler system and mountings, component layout

Note:

Align the exhaust system longitudinally so that the dimensions -a- and -b- are maintained.

1 - Mount

- Note installation position

2 - 25 Nm(18 ft lb)

3 - Center muffler

4 - Mount

5 - Rear muffler

6 - 40 Nm (30 ft lb)

7 - Clamp

26-6

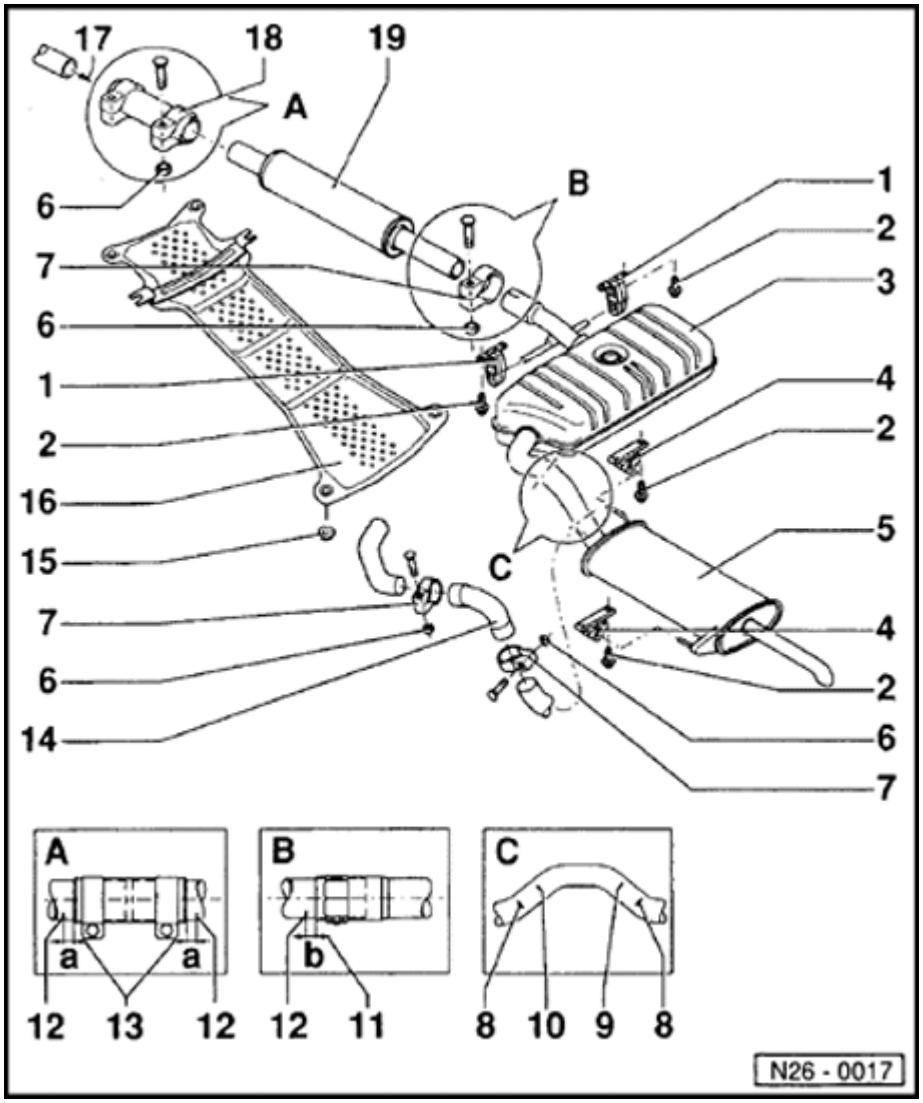

8 - Marking

- For clamp

- Three times on circumference
- Distance clamp/marking ⇒ item 11

9 - Separating point

- To allow individual exhaust component replacements
  - When replacing the center muffler item 3
- Marked by three impressions on circumference of connecting pipe
  - In production, the center and rear muffler are one part. In cases of repair the center and rear mufflers are

supplied separately. To make the connection, a repair connecting pipe item 14 and two clamps are supplied.

- Cut through the connecting pipe with a hacksaw at right angles at the separating point.

26-7

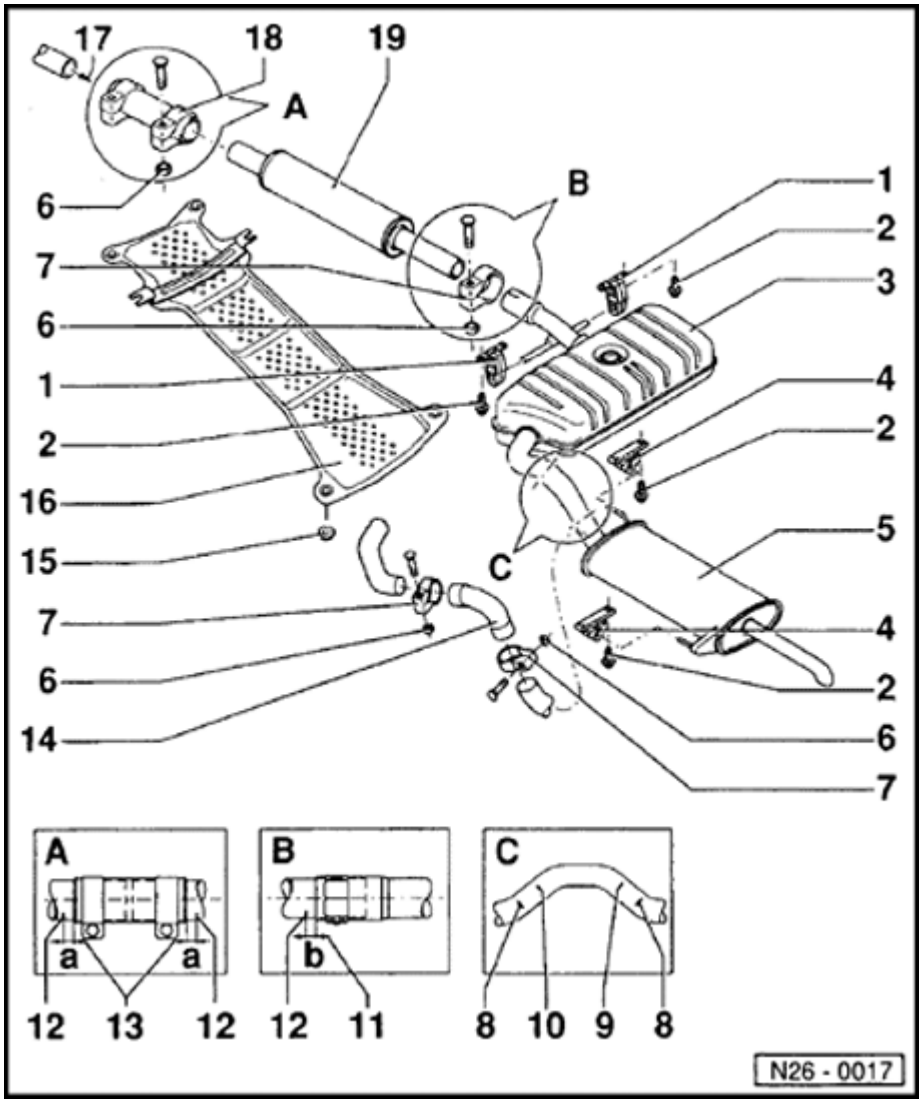

10 - Separating point

- To allow individual exhaust component replacements
  - When replacing the rear muffler item 5
- Marked by three impressions on circumference of connecting pipe
  - In production, the center and rear muffler are one part. In cases of repair the center and rear mufflers are supplied separately. To make the connection, a repair connecting pipe item 14 and two clamps are supplied
  - Cut

through the connecting pipe with a hacksaw at right angles at the separating point.

11 - Dimension -b- = approx. 5 mm

12 - Marking

- Three times on circumference

26-8

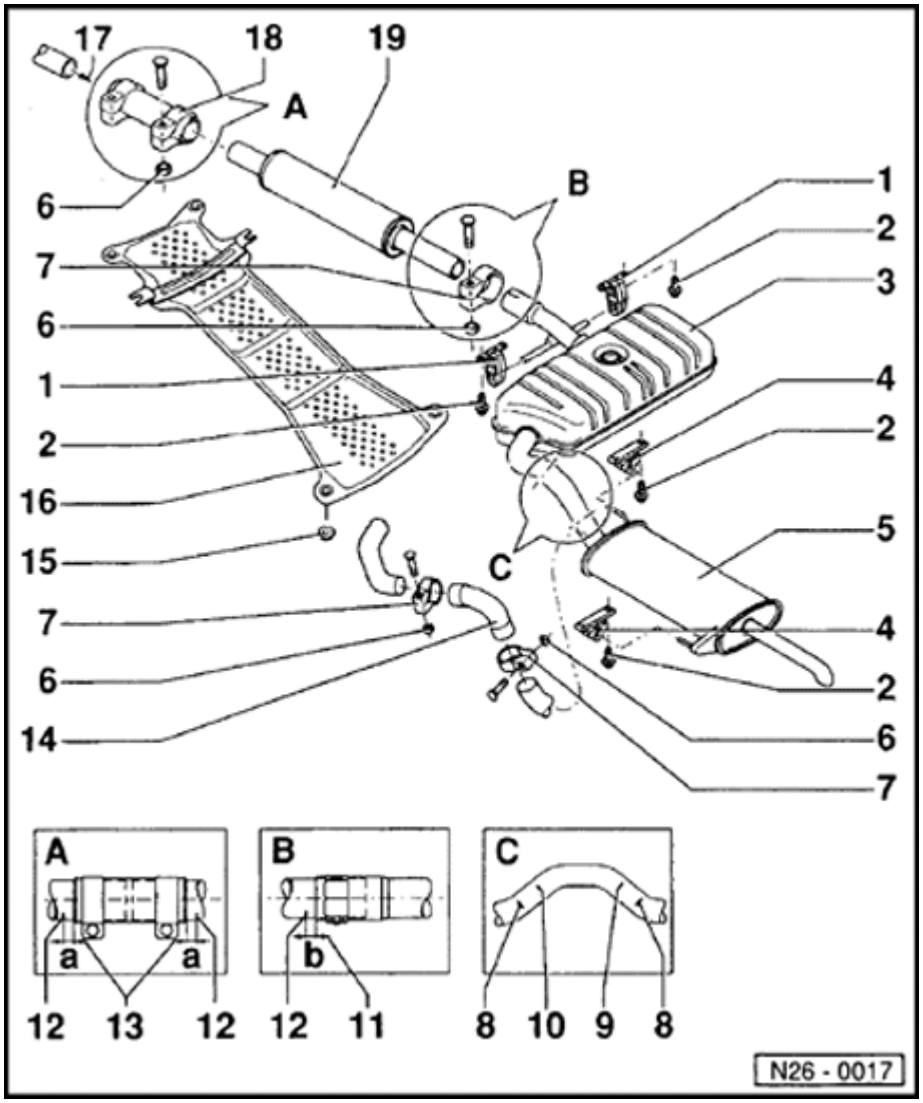

13 - 14Dim. -a- = approx. 5 mm

15 - Repair connecting pipe

16 - Sheet metal nut

- Must be screwed-on/off

17 - Heat shield

18 - From three-way catalyst

- ⇒ Page 26-4 , item 7

19 - Double clamp

20 - Front muffler

26-9

Exhaust gas recirculation system

Notes:

- *The function and control of the Exhaust Gas Recirculation (EGR) system is checked by the On Board Diagnostic system of the Motronic Engine Control Module (ECM) -J220-.*

*⇒ Repair Manual, 2.8 Liter VR6 2V Fuel Injection & Ignition, Repair Group 01; Components marked with an * are checked via On Board Diagnostic.*

*⇒ Repair Manual, 2.8 Liter VR6 2V Fuel Injection & Ignition, Repair Group 01; Components marked with ** are checked via the Output Diagnostic Test Mode (DTM).*

- *Always replace sealing rings and gaskets when assembling.*

- *Vacuum lines and hose connections must be free of leaks.*

- *Vacuum lines must not be blocked or kinked.*

26-10

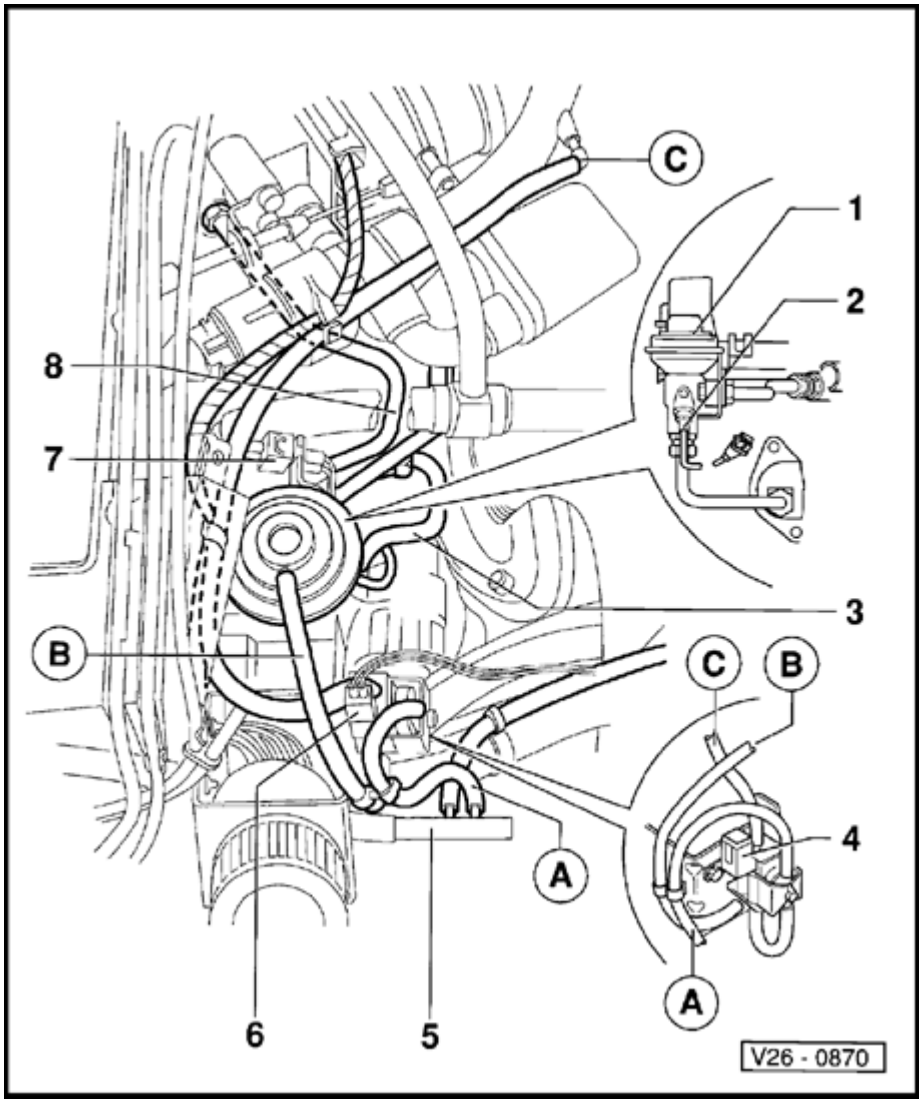

1 - EGR valve

- Checking ⇒ Page 26-12

2 - EGR Temperature sensor - G98-*

- 20 Nm (15 ft lb)
- Checking ⇒ Page 26-12

3 - Pipe

- For exhaust gas inlet

4 - EGR valve -N18-*/**

- Two-way valve

5 - Collective connection

- For intake manifold vacuum

6 - Connector

- 2-pin
- For EGR valve - N18-

26-11

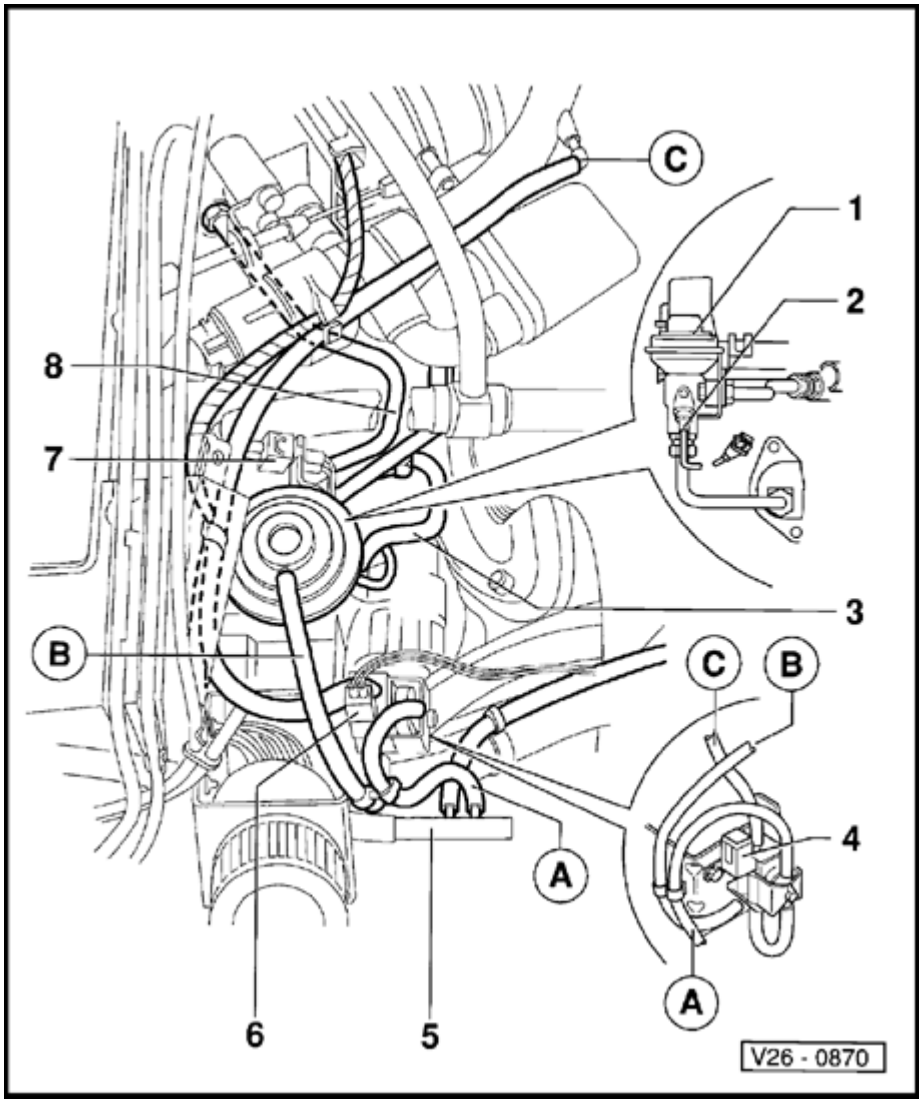

7 - Connector

- 2-pin

- For EGR Temperature sensor - G98-

8 - Pipe For exhaust gas outlet

26-12

Exhaust Gas Recirculation (EGR) valve, checking

Note:

Check using VAG 1551 Scan Tool in "Read measuring value block" function, perform check during idle.

- Vacuum lines and hose connections free of leaks.
- Vacuum lines not blocked or kinked.
- Engine oil temperature 50 °C (122 °F) minimum

⇒ *Repair Manual, 2.8 Liter VR6 2V Fuel Injection & Ignition, Repair Group 01; Connect VAG 1551 Scan Tool and select address word 01; perform selection during idle*

Rapid data transfer **HELP**
Select function XX

Display will appear as shown:

- Input 08 for "Read measuring value block" function and confirm with Q.

Read measuring value block **HELP**
Input display group number XX

Display will appear as shown:

- Input 02 for "Display group number" and confirm with Q.

26-13

Read measuring value block 2 →

1 2 3 4

Display will appear as shown: (1...4 = Display zones)

Note:

If the display remains blank, see Scan Tool operating instructions

- Pull vacuum hose off EGR valve.

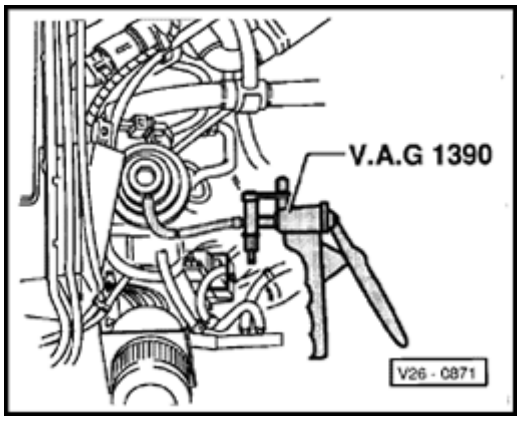

- Connect hand vacuum pump US 8026 to EGR valve using a piece of auxiliary hose.
- Operate pump. Idling characteristics must reduce.

If the idle does not reduce:

- Check lines and connections for blocking, clean, if necessary replace EGR valve.

If the idle reduces:

- Observe temperature value for EGR valve in display zone 4. The temperature value must increase uniformly without interruption.
- As soon as 200 °C is attained in display zone 4, disconnect hand vacuum pump.
- Press → button.

26-14

- Input 06 for "End output" and confirm with Q.

If the temperature value does not change:

⇒ *Repair Manual, 2.8 Liter VR6 2V Fuel Injection & Ignition, Repair Group 01; Check activation of EGR valve -N18-*

EGR valve must click during the electrical check:

- Replace EGR Temperature sensor -G98-.

⇒ *Repair Manual, 2.8 Liter VR6 2V Fuel Injection & Ignition, Repair Group 01; Read Diagnostic Test Mode (DTM) memory*

26-15

Secondary Air Injection system, function

The Secondary Air Injection system blows in air behind the exhaust valve for 65 seconds during the cold start (+15 °C ... +35 °C engine coolant temperature). This produces an Oxygen rich exhaust gas, causes afterburning and reduces the heat-up time for the three-way catalyst.

Activation is initiated by the Motronic Engine Control Module (ECM) -J220- via the First or Third Speed Coolant Fan Control Cut-Off relay -J229- to Secondary Air Injection solenoid valve -N112- and Combi-valve.

After each subsequent engine start (up to max. 85 °C engine temperature) the Secondary Air Injection system will (after a 20 second delay) switch in for 5 seconds during idle.

The Secondary Air Injection system is monitored by the On Board Diagnostic system.

26-16

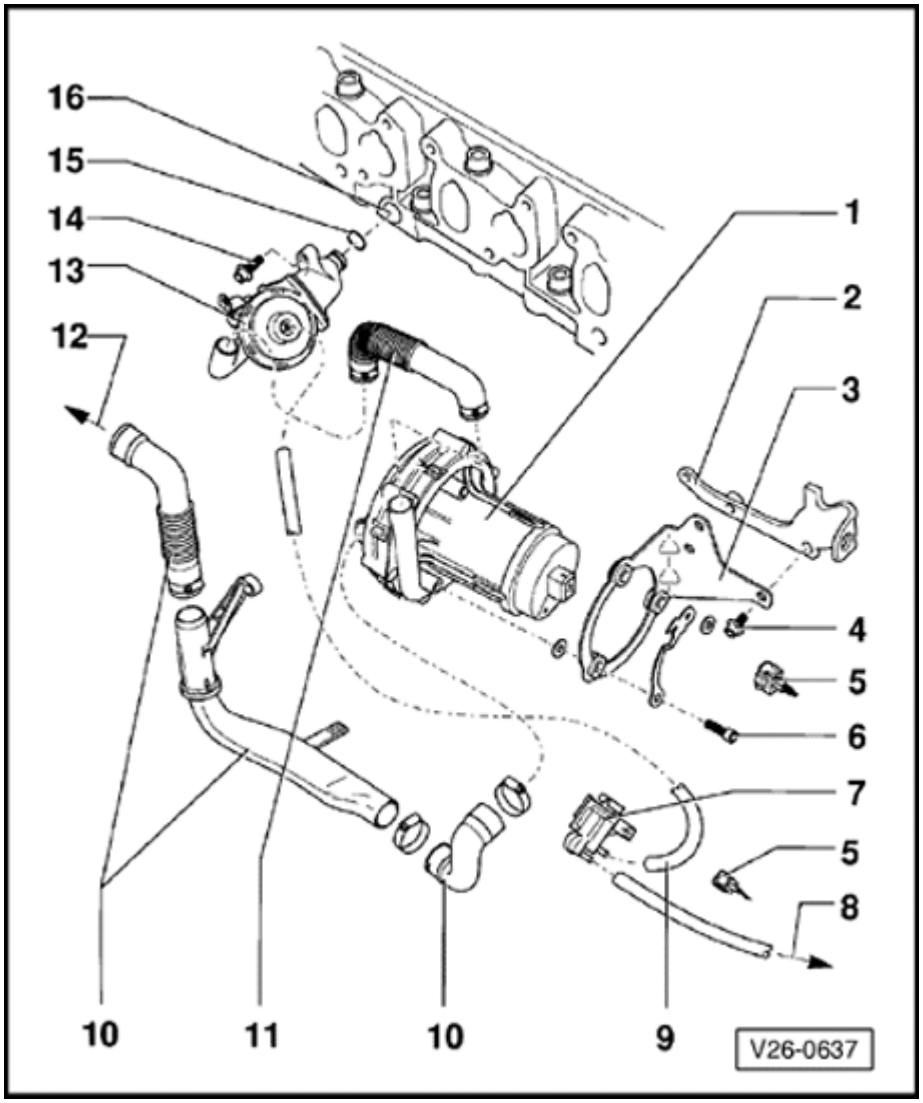

Secondary Air Injection system components, removing and installing

Notes:

- *Secondary Air Injection pump relay - J299- * ⇒ Page 26-20 , ⇒ Fig. 1*

*⇒ Repair Manual, 2.8 Liter VR6 2V Fuel Injection & Ignition, Repair Group 01; Components marked with an * are checked via On Board Diagnostic. ⇒ Repair Manual, 2.8 Liter VR6 2V Fuel Injection & Ignition, Repair Group 01; Components marked with ** are checked via the Output Diagnostic Test Mode (DTM).*

1 - Secondary Air Injection pump motor - V101-*/**

- Checking ⇒ Page 26-21

- Removing and installing ⇒ Page 26-24

2 - Lifting eye

- On left side of cylinder head

26-17

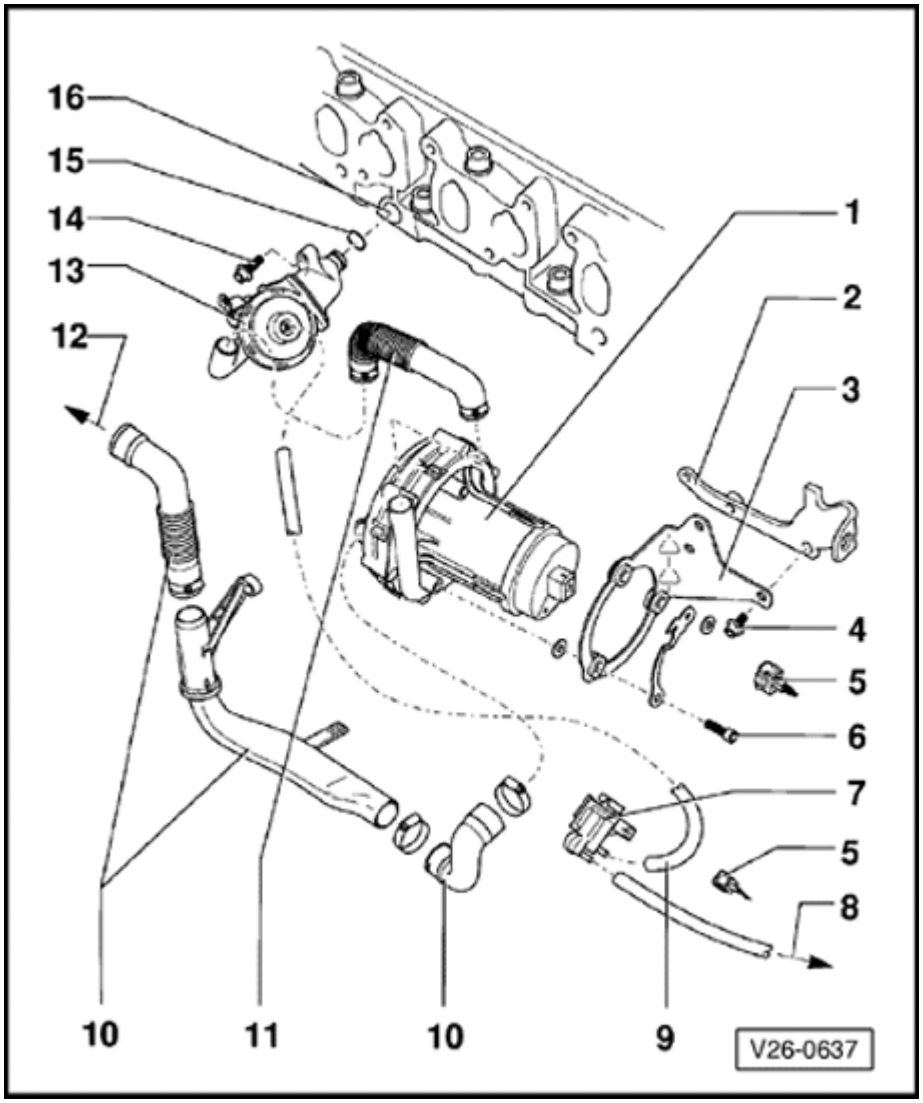

3 - Bracket

- For Secondary Air Injection pump motor item 1 and Secondary Air Injection solenoid valve item 7

4 - 25 Nm(18 ft lb)

5 - Connector

- 2-pin

6 - 10 Nm (7 ft ;lb)

7 - Secondary Air Injection solenoid valve - N112-*/**

- Secured to bracket, item 3
- Checking ⇒ Page 26-22
- Removing and installing ⇒ Page 26-24

8 - Vacuum hose

- To intake manifold upper section or manifold connector

26-18

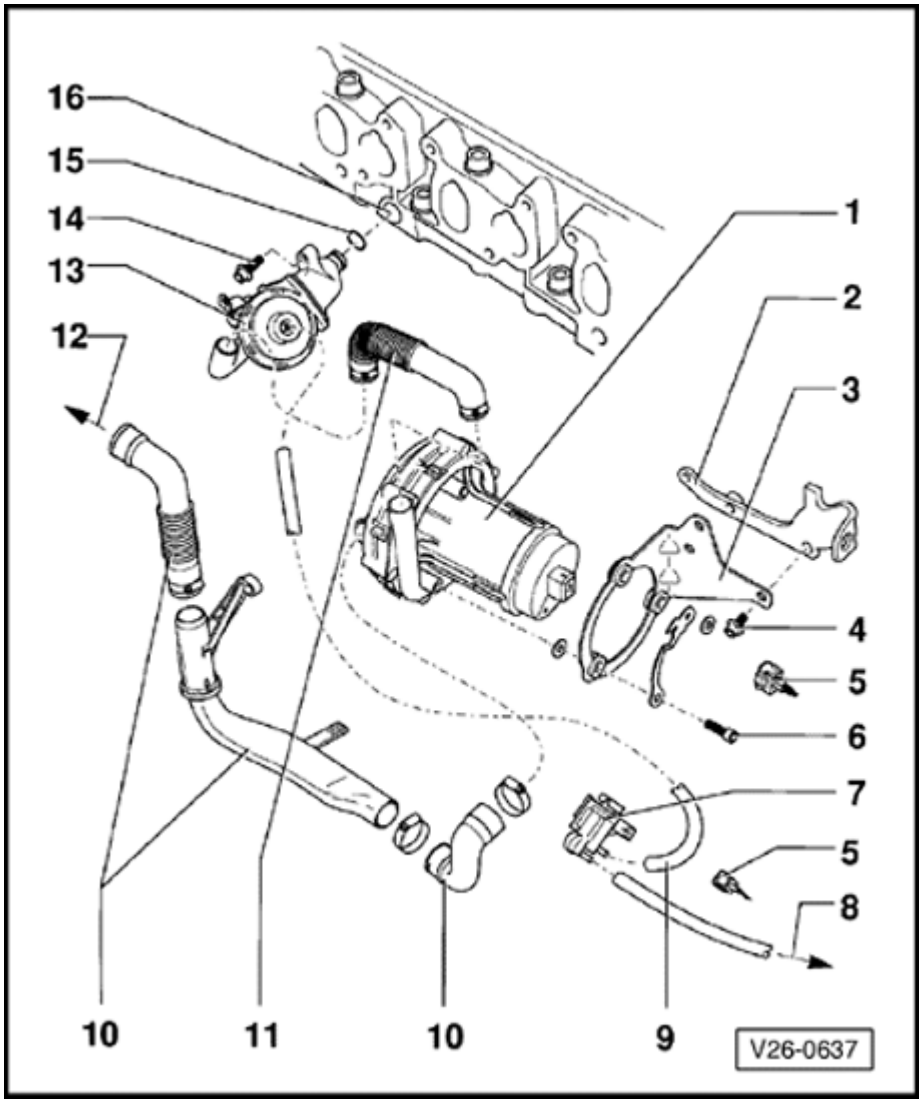

9 - Vacuum hose

- From Secondary Air Injection solenoid valve, (item 7) to Combi-valve, (item 13)

10 - Intake hose

11 - Pressure hose

- Make sure tight (leak-free) connection

12 - To Air Cleaner

13 - Combi-valve

- Checking ⇒ Page 26-20
- Removing and installing ⇒ Page 26-24

14 - 15 Nm (11 ft lb)

15 - O-Ring

- Always replace

16 - Secondary Air

Injection port

- In cylinder head

26-19

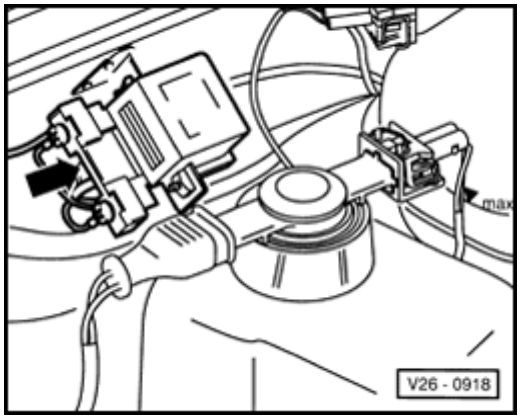

Fig. 1 Secondary Air Injection pump relay -J299-

- with fuse -arrow-

26-20

Combi-valve, checking

- Remove pressure hose from combi-valve.

- Pull vacuum hose off Secondary Air Injectior solenoid valve -N112-.

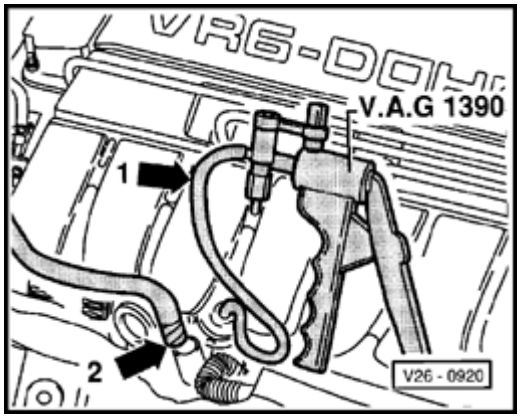

- Connect hand vacuum pump US 8026 to vacuum hose -1- to combi-valve.

Note:

Do not use compressed air during the following check!

- Connect auxiliary hose to connection -2- for pressure hose and blow into it.

  Combi-valve must be closed.

- Operate hand vacuum pump.

  Combi valve must open.

26-21

Secondary Air Injection pump motor, checking

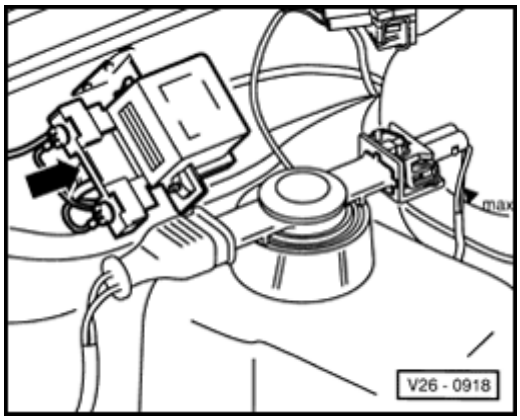

- Fuse -arrow- on Secondary Air Injection pump relay -J299- OK.
- Engine oil temperature 15 ... 85 °C

- Remove pressure hose from combi-valve and route upward.
- Start engine and let idle. After approx. 20. seconds, the Secondary Air Injection pump motor runs for approx. 5 seconds, and Secondary Air must exit from the pressure hose.

If the Secondary Air Injection pump motor does not run:

- Switch off ignition.
- Disconnect 2-pin harness connector from Secondary Air Injection pump motor -V101-.
- Connect VAG 1527B LED tester between terminals of harness connector using jumper wires from VW 1594 adaptor kit.
- Start engine and let idle. After approx. 20 seconds, the LED must light up for approx. 5 seconds.

LED lights up (voltage supply OK):

26-22

- Replace Secondary Air Injection pump motor -V101-.

If LED does not light up:

- Reconnect 2-pin harness connector.

⇒ *Repair Manual, 2.8 Liter VR6 2V Fuel Injection & Ignition, Repair Group 01; Check activation of Secondary Air Injection pump motor. Output Diagnostic Test Mode (DTM).*

If the Secondary Air Injection pump motor does not run during the Output DTM:

- Check DTC memory for Secondary Air Injection pump relay -J299- stored code, also reference the wiring diagram.

⇒ *Repair Manual, 2.8 Liter VR6 2V Fuel Injection & Ignition, Repair Group 01; Read DTC memory*

26-23

Secondary Air Injection solenoid valve, checking

- Engine oil temperature 15 ... 85 °C

- Pull vacuum hose off combi-valve and route upward.

- Start engine and let idle. After approx. 20 seconds the Secondary Air Injection pump motor runs for approx. 5 seconds and manifold absolute pressure must be perceptible at vacuum hose.

If no manifold pressure is perceptible:

- Switch off ignition.

- Disconnect 2-pin harness connector from Secondary Air Injection solenoid valve.

- Connect VAG 1527B LED tester between terminals of harness connector using jumper wires from VW 1594 adaptor kit.

- Start engine and let idle.

- After approx. 20 seconds, the LED must light up for approx. 5 seconds.

LED lights up (voltage supply OK):

- Replace Secondary Air Injection solenoid valve .

LED does not light up:

- Reconnect 2-pin harness connector.

26-24

⇒ *Repair Manual, 2.8 Liter VR6 2V Fuel Injection & Ignition, Repair Group 01; Check Secondary Air Injection solenoid valve activation. Electrical checks.*

Secondary Air Injection solenoid valve cannot be observed to switch during the electrical check:

- Check DTC memory for Secondary Air Injection pump relay -J299- stored code, also reference the wiring diagram.

⇒ *Repair Manual, 2.8 Liter VR6 2V Fuel Injection & Ignition, Repair Group 01; Read DTC memory*

26-25

Combi-valve and Secondary Air Injection pump motor, removing and installing

Removing

- Switch off ignition.

- Disconnect battery ground cable.

Note:

Obtain radio anti-theft code from customer before disconnecting the battery.

Vehicles with A/C

- Remove retaining clamp(s) from refrigerant lines.

CAUTION

The A/C refrigerant circuit must not be opened.

26-26

Notes:

- *The opening of the refrigerant circuit can only be carried out in workshops, which have trained personnel and the necessary range of tools and workshop equipment.*

- *To prevent damage to the condenser and refrigerant lines and hoses, make sure that the lines and hoses are not stretched, kinked or bent.*

All vehicles

- Remove intake hose between Air Cleaner and Secondary Air Injection pump motor.

- Remove pressure hose between combi-valve and Secondary Air Injection pump motor.

- Pull vacuum hose off Combi-valve.

- Remove dipstick guide tube from intake manifold lower section.

- Unbolt Combi-valve from cylinder head and remove.

- Disconnect 2-pin harness connectors from Secondary Air Injection pump motor and Secondary Air Injection solenoid valve.

- Unbolt Secondary Air Injection pump motor from lifting eye and carefully pull out between engine coolant radiator and intake manifold lower section.

Installing

Installation is the reverse of the removal procedure.

Volkswagen Passat

Official Factory Repair Manual

1995
Gasoline, Turbo Diesel, TDI
4-cylinder and VR6, including wagon

Robert Bentley

PASSAT '95 - '97

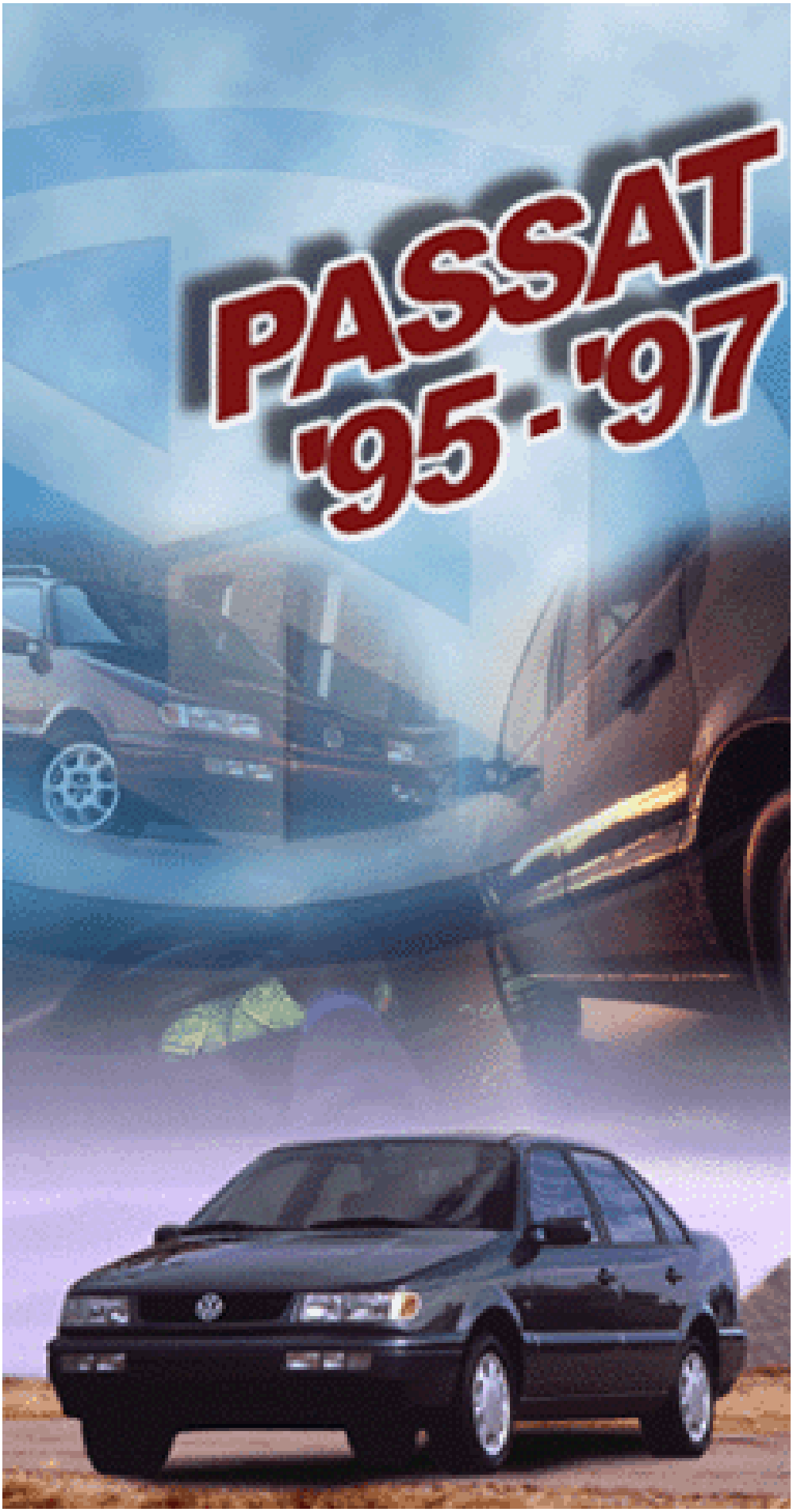

2.0 Liter 4-Cyl. 2V Fuel Injection & Ignition, Engine Code(s): ABA m.y. 1995

01 - On Board Diagnostic (OBD)

On Board Diagnostic
Function
Technical data
VAG 1551 Scan Tool (ST), connecting and selecting function
Engine Control Module (ECM) coding, checking
Diagnostic Trouble Code (DTC) memory, checking ((VAG 1551 function 02)
Diagnostic Trouble Code (DTC) table
Diagnostic Trouble Code (DTC) memory, erasing ((VAG 1551 function 05)
Output Diagnostic Test Mode (DTM) (VAG 1551 function 03)
Read measuring value block (VAG 1551 function 04)

24 - Multiport Fuel Injection (MFI)

Motronic fuel injection and ignition system
Component overview

Motronic fuel injection system, servicing
Components, removing and installing
Intake manifold, upper, disassembling and assembling
Intake manifold, lower, disassembling and assembling
Air cleaner, disassembling and assembling
Safety precautions
Rules for cleanliness
Technical data
Idle check
Idle air control, checking
Heated Oxygen Sensor (HO2S) and oxygen sensor control, checking
Oxygen sensor heating, checking
Engine operating mode, checking
Mass Air Flow (MAF) sensor, checking
Throttle Position (TP) sensor, checking
Transmission Control Module (TCM) and Throttle Position (TP) sensor, matching
Engine Coolant Temperature (ECT) sensor, checking
Intake Air Temperature (IAT) sensor, checking
Engine Speed (RPM) sensor, checking
Vehicle speed signal, checking
Engine Control Module (ECM) voltage supply, checking
Air conditioning compressor signal, checking
Fuel injectors, checking
Fuel injector spray pattern and leakage, checking
Fuel pressure regulator and residual pressure, checking

Intake air system, checking for leaks (outside air)
Intake air preheating, checking

28 - Ignition/Glow plug system

Motronic fuel injection and ignition system

Motronic ignition system, servicing

Safety precautions
Technical data, spark plugs
Distributor, removing and installing
Ignition timing control, checking
Camshaft Position (CMP) sensor, checking
Knock sensor, checking
Ignition coil, checking
Ignition coil power output stage, checking

On Board Diagnostic

Function

The Motronic Engine Control Module (ECM) J220 is equipped with Diagnostic Trouble Code (DTC) memory.

Malfunctions in monitored sensors or components are stored in DTC memory along with an indication of the type of malfunction. Check DTC memory and display stored Diagnostic Trouble Codes (DTC) by initiating the On Board Diagnostic (OBD) program using the VAG 1551 Scan Tool (ST) ⇒ page 01-9 .

The DTC memory must be erased after the malfunction has been repaired ⇒ page 01-37 .

A malfunction that affects oxygen sensor control can only be read accurately after the car has been driven for at least 10 minutes.

Malfunctions that can be attributed to a temporary open circuit in the wiring, or a loose terminal, will also be stored. These malfunctions will be displayed as sporadic malfunctions "SP" and are automatically cancelled if they are not repeated after 40 engine starts.

Note:

The Malfunction Indicator Lamp (MIL) in the instrument panel must light up when the ignition is switched on and go off when the engine is started (running). As long as malfunctions occur in the monitored sensors or components and the monitoring conditions are met, the Malfunction Indicator Lamp lights up even with the engine running.

Technical data

Equipped with:

- DTC memory: Non-volatile memory and volatile memory1
- Rapid data transfer

1) Will be cancelled after 40th engine start if malfunction has not occurred again.

Engine Control Module (ECM) identification

⇒ Page 01-4

01-3

Engine Control Module (ECM) functions

Note:

The Motronic ECM is equipped with various functions. Some functions can be carried out with ignition switched on or with engine running. The following table details the prerequisites for carrying out the individual functions.

Function	Ignition switched on	Engine idling
02 Check DTC Memory	x	x
03 Output Diagnostic Test Mode (DTM)	x	-
04 Basic Setting1)	-	x
05 Erase DTC Memory	-	x
06 End Output	x	x
08 Read Measuring Value Block	x	x

1) The Malfunction Indicator Lamp (MIL) in the instrument cluster lights up in the "Basic Setting" function.

01-4

VAG 1551 Scan Tool (ST), connecting and selecting function

Special tools, testers and auxiliary items

- VAG 1551 scan tool with cable VAG 1551/3

Note:

The VAG 1552 vehicle system tester can be used instead of the VAG 1551 scan tool, however a print-out is not possible.

Test conditions

- Fuse 21 OK
- Battery positive voltage (B+) at least 11 volts
- Ground connections on engine and transmission OK (Engine ground connection: ⇒ page 24-4 , item 22)

Work sequence

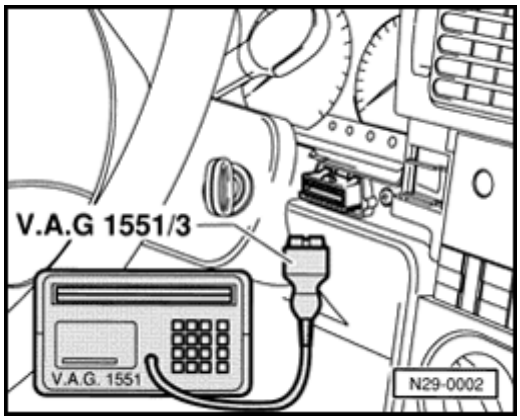

- Remove cover for Data Link Connector (DLC).
- Connect VAG 1551 scan tool with VAG 1551/3 adapter cable.

01-5

Depending upon the desired function:

- Switch ignition on

  or

- Start engine.

⇒ Engine Control Module (ECM) functions table, page 01-3

Note:

- *If the display is not as indicated in the work sequence:*

⇒ *VAG 1551 scan tool operating instructions*

- *If due to an input malfunction "Error in communication link" is displayed, disconnect wire from VAG 1551 scan tool, reconnect and repeat work step.*

- Operate VAG 1551 scan tool taking into account information on the display:

- Press button -1- to select "Rapid data transfer" operating mode.

- Press buttons -0- and -1- to insert "Engine Electronics" address word 01.

- Press -Q- button to confirm input.

01-6

037 906 258K Engine 20Q 400101-S →

Coding 2 AG

ECM identification and coding indicated on display, e.g.:

- 037 906 258K = ECM Part No. (for latest version see parts catalog microfiche)
- Engine 20Q = 2.0 liter cross-flow engine
- 400101-S = Program level number and version
- Coding 2 AG = Coding variants

ECM coding:

Coding	For vehicles with
1 HS	Manual transmission with EGR and secondary air system
2 AG	Automatic transmission with EGR and secondary air system

Note:

Correct ECM identification and coding are shown only at idle.

If the coding differs from the vehicle version, then:

- Check ECM coding ⇒ page 01-7 .
- Press → button.

Rapid data transfer **HELP**

Select function XX

Indicated on display:

- Further measures see repair procedures.

01-7

Engine Control Module (ECM) coding, checking

Special tools, testers and auxiliary items

- VAG 1598 test box
- Hand multimeter VAG 1526 or multimeter V 1715
- VW 1594 connector test kit
- Wiring diagram

Work sequence

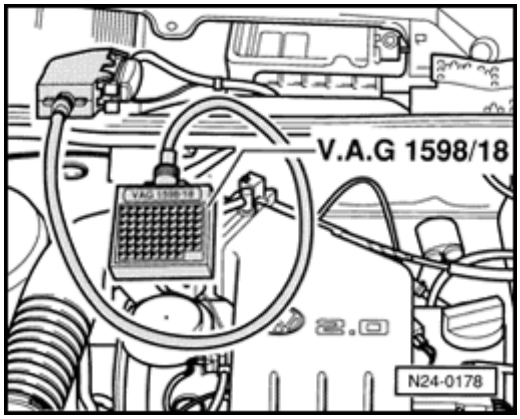

- Connect VAG 1598 test box to engine contro module wiring harness.
- Check wiring between test box sockets 56 a 58 for open circuit according to wiring diagra

Resistance:

- Vehicles with automatic transmission: Max. Ω
- Vehicles with manual transmission: ∞ Ω

01-8

If the specifications are not attained:

- Locate and repair open circuit using wiring diagram.

Note:

Incorrect coding leads to:

- *Engine running malfunctions*
- *Increased fuel consumption*
- *Increased emissions*
- *Malfunctions stored in DTC memory that are not actually present*
- *Reduced transmission life*

01-9

Diagnostic Trouble Code (DTC) memory, checking ((VAG 1551 function 02)

- Connect VAG 1551 scan tool and insert "Engine Electronics" address word 01; selection is carried out with engine idling ⇒ page 01-4 .

If engine does not start:

- Operate starter for approx. 6 seconds, then do not switch ignition off.

- Switch printer on with the PRINT button (warning lamp in button lights up).

Rapid data transfer **Select function XX**	**HELP**	⮜	Indicated on display - Press buttons -0- and -2- to select "Check DTC Memory" function 02. - Press -Q- button to confirm input.
X DTC recognized		⮜	The number of malfunctions stored or "No DTC recognized" will be displayed.

Note:

If something different is indicated on the display:

⇒ *VAG 1551 scan tool operating instructions*

01-10

If one or more DTCs are stored:

The malfunctions stored will be displayed and printed out one after the other.

Rapid data transfer **Select function XX**	**HELP**	⮜	Indicated on display

If no DTC is stored:

- Press → button.
- Press buttons -0- and -6- to select "End Output" function 06.
- Press -Q- button to confirm input.
- Locate and eliminate malfunctions printed out according to DTC table ⇒ page 01-11 .

Erasing DTC memory ⇒ page 01-37 .

01-11

Diagnostic Trouble Code (DTC) table

Note:

- *The DTC table is listed according to the 5-digit diagnostic trouble code on the left.*
- *Before replacing components indicated as malfunctioning, check the wiring and connectors to these components as well as the ground connections using the wiring diagrams. This is particularly relevant if malfunctions are output as "occurring sporadically" (SP).*

VAG 1551 print-out	Possible cause	Possible effect	Corrective action
No DTC recognized	If no malfunction has been detected: malfunction not recognized by On Board Diagnostic program		
00281 Vehicle speed sensor-G68 Incorrect signal	♦ No signal from speedometer G21 or vehicle speed sender G68	♦ Speedometer not indicating correctly ♦ Governed speed reduced to 5000 RPM. ♦ Increased idle speed ♦ Engine running problems	- Check signal from G21 and/or G68 ⇒ page 24-67

VAG 1551 print-out	Possible cause	Possible effect	Corrective action
00513 Engine Speed Sensor-G28 Incorrect signal	♦ Gap between speed sensor and sender wheel too large ♦ Metal particles on G28 or retaining base loose	♦ Engine will not start	- Check G28 for tight fit, metal particles ⇒ page 24-11 , item 28
	♦ Sender wheel loose		- Check sender wheel for tight fit: ⇒ *Repair Group 13*
	♦ Wiring open circuit or short circuit ♦ Loose terminal		- Check G28 ⇒ page 24-64
	♦ G28 faulty		- Replace G28 ⇒ page 24-11 , item 28

VAG 1551 print-out	Possible cause	Possible effect	Corrective action
00515 Camshaft Pos. Sensor-G40 Open/Short circuit to B+	♦ Camshaft Position (CMP) sensor G40 faulty	♦ High fuel consumption	- Check G40 ⇒ page 28-15
Short to Ground	♦ Wiring open circuit	♦ Reduced output	- Check distributor position ⇒ page 28-8
	♦ Wire has short to positive (B+) ♦ Loose terminal ♦ Wire has short to ground	♦ Poor starting	

VAG 1551 print-out	Possible cause	Possible effect	Corrective action
00518 Throttle Pos. Sensor-G69			
Short to Ground	♦ Wiring open circuit ♦ Wire has short to ground ♦ Throttle position sensor G69 faulty	♦ Hard load change	- Check G69 ⇒ page 24-46
Open/Short circuit to B+	♦ Wiring open circuit in ground wire ♦ Wire has short to positive ♦ Throttle position sensor G69 faulty		
Incorrect signal	♦ Loose terminal ♦ Throttle position sensor G69 faulty		

01-16

VAG 1551 print-out	Possible cause	Possible effect	Corrective action
00522 Engine Coolant Temp.Sensor-G62			
Short to Ground	♦ Wire has short to ground ♦ Engine Coolant Temperature (ECT) sensor G62 faulty	♦ Poor cold starting ♦ Poor hot starting	- Check G62 ⇒ page 24-54
Open/Short circuit to B+	♦ Wiring open circuit ♦ Wire has short to positive ♦ ECT sensor G62 faulty	♦ Coolant temperature on VAG 1551 remains constant at approx. 80 °C	
incorrect signal	♦ ECT sensor G62 faulty		

VAG 1551 print-out	Possible cause	Possible effect	Corrective action
00524 Knock Sensor 1-G61 Open/short circuit to Ground	♦ Wiring open circuit or short to ground	♦ Reduced performance ♦ Increased fuel consumption	- Check G61 ⇒ page 28-17
	♦ Knock sensor G61 faulty		- Replace G61 ⇒ page 28-3 , item 10
	♦ No knock recognition from Motronic ECM J220		- If necessary replace ECM J220 ⇒ page 24-9 , item 16

VAG 1551 print-out	Possible cause	Possible effect	Corrective action
00525 Heated Oxygen Sensor-G39 No signal	♦ Wiring open circuit ♦ Oxygen sensor heating faulty ♦ Heated Oxygen Sensor (HO2S) G39 faulty	♦ No oxygen sensor control ♦ Fuel smell	- Check oxygen sensor probe and oxygen sensor control ⇒ page 24-30 - Check oxygen sensor heating ⇒ page 24-36
Short to Ground	♦ Wiring open circuit or short to ground ♦ HO2S G39 faulty		
Short circuit to B+	♦ Wiring open circuit or short to positive ♦ HO2S G39 faulty		

VAG 1551 print-out	Possible cause	Possible effect	Corrective action
00527 Intake Air Temp.Sensor-G72			
Short to Ground	♦ Wire has short to ground ♦ Intake Air Temperature (IAT) sensor G72 faulty	♦ Poor hot starting	- Check G72 ⇒ page 24-59
Open/Short circuit to B+	♦ Wiring open circuit or short to positive ♦ IAT sensor G72 faulty	♦ Intake manifold temperature on VAG 1551 remains constant at approx. 20 °C	

VAG 1551 print-out	Possible cause	Possible effect	Corrective action
00532 Supply Voltage (B+) Signal too high	♦ Battery positive voltage (B+) exceeds 16.0 V	♦ Engine will not start	- Check generator: ⇒ *Wiring diagrams, Electrical Wiring Diagrams, Troubleshooting and Component Locations binder*
Signal too low	♦ Battery positive voltage (B+) less than 10.0 V	♦ Engine running problems	- Check battery
00533 Idle Air Control Regulation Adaption limit exceeded	♦ Idle Air Control (IAC) valve N71 sticking or dirty	♦ Rough idle	- Check N71 ⇒ page 24-27
Adaption limit not reached	♦ Unmetered air between Mass Air Flow (MAF) sensor G70 and engine		- Check intake air system for leaks (unmetered air) ⇒ page 24-85

VAG 1551 print-out	Possible cause	Possible effect	Corrective action
00537 Oxygen Sensor Control Control limit exceeded	♦ Short to ground	♦ No oxygen sensor control (control at limit) ♦ Engine running problems	- Check HO2S and oxygen sensor control ⇒ page 24-30
Control limit not reached	♦ Heated Oxygen Sensor (HO2S) G39 faulty		
	♦ Intake air system leaking		- Check intake air system for leaks (unmetered air) ⇒ page 24-85
	♦ Exhaust system leaking between cylinder head and Three Way Catalytic Converter (TWC)		- Check exhaust system: ⇒ *Repair Manual, 2.0 Liter General, Engine, Repair Group 26*
	♦ Evaporative Emission (EVAP) canister purge regulator valve N80 sticking (always open)		- Check N80 using output Diagnostic Test Mode (DTM) ⇒ page 01-39
	♦ Fuel pressure not OK		- Check fuel pressure regulator ⇒ page 24-82
	♦ Fuel injectors faulty		- Check fuel injectors ⇒ page 24-77

VAG 1551 print-out	Possible cause	Possible effect	Corrective action
00543 RPM upper Limit exceeded Signal too high	♦ The governed speed of the engine has been reached (wrong gear selected, engine speed exceeded 6800 RPM)	♦ Governed speed reduced to 5000 RPM	- Erase DTC memory ⇒ page 01-37
	♦ Signal from engine speed sensor G28 impaired		- Check G28 ⇒ page 24-64

VAG 1551 print-out	Possible cause	Possible effect	Corrective action
00545 Engine/Trans.Electrical Connection Short to Ground	♦ Malfunction in automatic transmission ♦ Wiring open circuit or short to ground	♦ Hard gear changes	- Check wiring to transmission: ⇒ *Wiring diagrams, Electrical Wiring Diagrams, Troubleshooting and Component Locations binder*
Short circuit to B+	♦ Wiring open circuit or short to positive		- Check Transmission Control Module DTC memory: Repair Manual, Automatic Transmission 096, Repair Group 01

VAG 1551 print-out	Possible cause	Possible effect	Corrective action
00549 Consumption Signal Short circuit to B+	♦ Wire 51 from Motronic ECM J220 to instrument cluster has open circuit or short to positive	♦ Multi-function indicator display is incorrect	- Locate and eliminate open/short circuit using wiring diagram: ⇒ *Wiring diagrams, Electrical Wiring Diagrams, Troubleshooting and Component Locations binder*
00553 Mass Air Flow Sensor-G70 Open/Short circuit to B+	♦ Wiring open circuit or short to positive ♦ Mass Air Flow (MAF) sensor G70 faulty	♦ Engine running problems	- Check MAF sensor G70 ⇒ page 24-41
Short to Ground	♦ Short to ground ♦ MAF sensor G70 faulty		

VAG 1551 print-out	Possible cause	Possible effect	Corrective action
00561 Mixture Adjustment Adaption limit not reached	♦ Oxygen sensor control faulty	♦ Engine running problems	- Check HO2S and oxygen sensor control ⇒ page 24-30
Adaption limit exceeded	♦ Fuel pressure not OK	♦ No oxygen sensor control	- Check fuel pressure regulator ⇒ page 24-82
	♦ Misfiring	♦ Oxygen sensor control learned values at limit	- Check ignition system ⇒ page 28-1
	♦ Intake air system leaking		- Check intake air system for leaks (unmetered air) ⇒ page 24-85
	♦ Exhaust system leaking between cylinder head and Three Way Catalytic Converter (TWC)		- Check exhaust system: ⇒ *Repair Manual, 2.0 Liter General, Engine, Repair Group 26*
	♦ Evaporative Emission (EVAP) canister purge regulator valve N80 sticking (always open)		- Check N80 using output Diagnostic Test Mode ⇒ page 01-39
	♦ Fuel injectors faulty		- Check injectors ⇒ page 24-77
	♦ Idle air control valve N71 sticking or dirty		- Check N71 ⇒ page 24-27

VAG 1551 print-out	Possible cause	Possible effect	Corrective action
00585 EGR Temp.Sensor -G98 Short to Ground	♦ Wire to temperature sensor has connection to vehicle ground	♦ Rough idle	- Check G98: ⇒ *Repair Manual, 2.0 Liter General, Engine, Repair Group 26*
00586 EGR System Control Incorrect signal	♦ Evaporative Emission (EVAP) canister purge regulator valve N80 sticking (always open)	♦ Rough idle	- Check N18: ⇒ *Repair Manual, 2.0 Liter General, Engine, Repair Group 26* - Check exhaust gas recirculation system: ⇒ *Repair Manual, 2.0 Liter General, Engine, Repair Group 26*
00609 Ignition Output 1 Short circuit to B+	♦ Ignition coil N152 or ignition coil power output stage N157 faulty	♦ Engine will not start	- Check N152 ⇒ page 28-19 - Check N157 ⇒ page 28-20

VAG 1551 print-out	Possible cause	Possible effect	Corrective action
00638 Engine/Trans.Electrical Connection 2 Short to Ground	♦ Wiring open circuit or short to ground	♦ Hard gear changes	- Check wiring to automatic transmission: ⇒ *Wiring diagrams, Electrical Wiring Diagrams, Troubleshooting and Component Locations binder*
	♦ Malfunction in automatic transmission or Throttle Position (TP) sensor for automatic transmission		
Short circuit to B+			- Check Transmission Control Module DTC memory: Repair Manual, Automatic Transmission 096, Repair Group 01
	♦ Wiring open circuit or short to positive		

VAG 1551 print-out	Possible cause	Possible effect	Corrective action
00640 Heated Oxygen Sensor Relay-J278			
Short circuit to B+	♦ Wire has short circuit to positive	♦ No oxygen sensor control	- Check J278 using output Diagnostic Test Mode ⇒ page 01-39
Open/short circuit to Ground	♦ Wiring open circuit/short to ground		- Check oxygen sensor heating ⇒ page 24-36
00758 Secondary Air Injection System (AIR)			
Short circuit to B+	♦ Wire has short circuit to positive ♦ Secondary Air Injection (AIR) pump motor V101 faulty	♦ None	- Check V101 using output Diagnostic Test Mode ⇒ page 01-39 - Check secondary air injection system: ⇒ *Repair Manual, 2.0 Liter General, Engine, Repair Group 26*

VAG 1551 print-out	Possible cause	Possible effect	Corrective action
01025 Malfunction Indicator Lamp Faulty			
Short circuit to B+	♦ Wire has short circuit to positive	♦ None	- Check wiring to MIL using wiring diagram: ⇒ *Wiring diagrams, Electrical Wiring Diagrams, Troubleshooting and Component Locations binder*
Open/short circuit to Ground	♦ Malfunction Indicator Lamp (MIL) faulty		
	♦ Wiring open circuit/short to ground		- If necessary replace lamp

VAG 1551 print-out	Possible cause	Possible effect	Corrective action
01235 Secondary Air Inject.Solenoid Valve-N112 Short circuit to B+	♦ Wire has short circuit to positive	♦ None	- Check N112 using output Diagnostic Test Mode ⇒ page 01-39 - Check secondary air injection system: ⇒ *Repair Manual, 2.0 Liter General, Engine, Repair Group 26*
	♦ N112 faulty		
Open/short circuit to Ground	♦ Wiring open circuit/short to ground		

VAG 1551 print-out	Possible cause	Possible effect	Corrective action
01242 Final Stage in Control Module No fault type recognized	♦ Loose terminal to the final control elements or Motronic ECM faulty	♦ Engine will not start	- Initiate output Diagnostic Test Mode (DTM) ⇒ page 01-39 - Check wiring to the final controls using wiring diagram, if necessary replace ECM ⇒ page 24-9 , item 16
01247 EVAP Canister Purge Regulator Valve-N80 Short to Ground	♦ Wiring has short to ground ♦ N80 faulty	♦ Rough idle ♦ Fuel smell	- Check N80 using output Diagnostic Test Mode (DTM) ⇒ page 01-39
Open/Short circuit to B+	♦ Wiring open circuit/short circuit to B+ ♦ N80 faulty		

- , Final control diagnosis

VAG 1551 print-out	Possible cause	Possible effect	Corrective action
01249 Injector, Cyl.1-N30 Open/short circuit to Ground	♦ Wiring open circuit or short to ground ♦ Fuel injector N30 malfunctioning	♦ Poor starting ♦ Engine running problems ♦ Engine will not start	- Check fuel injectors N30-N33 ⇒ page 24-77
Short circuit to B+	♦ Short to positive ♦ Fuel injector N30 malfunctioning		
01250 Injector, Cyl.2-N31 Open/Short circuit to B+	⇒ *Injector Cyl.1 DTC 01249*	⇒ *Injector Cyl.1 DTC 01249*	⇒ *Injector Cyl.1 DTC 01249*
Short to Ground			

VAG 1551 print-out	Possible cause	Possible effect	Corrective action
01251 Injector, Cyl.3-N32 Open/Short circuit to B+ Short to Ground	⇒ *Injector Cyl.1 DTC 01249*	⇒ *Injector Cyl.1 DTC 01249*	⇒ *Injector Cyl.1 DTC 01249*
01252 Injector, Cyl.4-N33 Open/Short circuit to B+ Short to Ground	⇒ *Injector Cyl.1 DTC 01249*	⇒ *Injector Cyl.1 DTC 01249*	⇒ *Injector Cyl.1 DTC 01249*

VAG 1551 print-out	Possible cause	Possible effect	Corrective action
01257 Idle Air Control Valve-N71 Short circuit to B+	♦ Wire has short circuit to positive ♦ Idle Air Control (IAC) valve N71 faulty	♦ Rough idle	- Check N71 using output Diagnostic Test Mode (DTM) ⇒ page 01-39
Open/short circuit to Ground	♦ Wiring open circuit/short to ground ♦ IAC valve N71 faulty		
01259 Fuel Pump Relay-J17 Short circuit to B+	♦ Short circuit to positive	♦ Engine will not start	- Check J17 using output Diagnostic Test Mode (DTM) ⇒ page 01-39

VAG 1551 print-out	Possible cause	Possible effect	Corrective action
01264 Secondary Air Injection Pump Relay-J299 Short circuit to B+	♦ Wire has short circuit to positive	♦ None	- Check J299 using output Diagnostic Test Mode (DTM) ⇒ page 01-39 - Check secondary air injection system: ⇒ *Repair Manual, 2.0 Liter General, Engine, Repair Group 26*
	♦ Relay J299 faulty		
Open/short circuit to Ground	♦ Wiring open circuit/short to ground		

VAG 1551 print-out	Possible cause	Possible effect	Corrective action
01265 EGR Vacuum Regulator Solenoid Valve-N18			
Open/short circuit to Ground	♦ Wiring open circuit/short to ground ♦ N18 faulty	♦ Rough idle	- Check N18 using output Diagnostic Test Mode (DTM) ⇒ page 01-39
Short circuit to B+	♦ Wire has short to positive ♦ N18 faulty		
65535 Control Module Malfunctioning	♦ Engine Control Module (ECM) internally malfunctioning	♦ Engine running problems ♦ Engine will not start	- Replace J361 if necessary ⇒ page 24-9 , item 16

Diagnostic Trouble Code (DTC) memory, erasing ((VAG 1551 function 05)

Test conditions

- Malfunction(s) eliminated

Work sequence

- Carry out road test of at least 10 minutes duration. When doing this
  - Make sure that engine coolant temperature reaches at least 80 °C (176 °F)
  - Briefly depress accelerator pedal fully when engine speed is above 4600 RPM.
  - Accelerate in 4th gear from approx. 50 km/h (30 mph) for approx. 4 seconds using half throttle.
- Connect VAG 1551 scan tool and, with engine idling, insert "Engine Electronics" address word 01 ⇒ page 01-4 .

Rapid data transfer **Select function XX**	**HELP**	≺	Indicated on display

- Press buttons -0- and -2- to select "Check DTC Memory" function 02.
- Press -Q- button to confirm input.

01-38

Rapid data transfer **Select function XX**	**HELP**	⮜	- Press → button until all malfunctions still stored have been displayed and the display reads as shown. - Press buttons -0- and -5- to select "Erase DTC Memory" function 05. - Press -Q- button to confirm input.
Rapid data transfer **DTC Memory is erased**	→	⮜	Indicated on display - Press → button.
Rapid data transfer **Select function XX**	**HELP**	⮜	Indicated on display - Press buttons -0- and -6- to select "End Output" function 06. - Press -Q- button to confirm input. - Carry out a further road test and check DTC memory again. • No malfunctions should be shown

Output Diagnostic Test Mode (DTM) (VAG 1551 function 03)

The output DTM actuates the following components in the stated sequence:

1 - Injector, Cyl. 1 N30

2 - Injector, Cyl. 2 N31

3 - Injector, Cyl. 3 N32

4 - Injector, Cyl. 4 N33

5 - Idle air control valve N71

6 - EVAP canister purge regulator valve N80

7 - Heated Oxygen Sensor (HO2S) relay

8 - EGR vacuum regulator solenoid valve N18

9 - Secondary Air Injection (AIR) relay J299

Special tools, testers and auxiliary items

- VAG 1551 scan tool with VAG 1551/3 adapter cable
- VAG 1598 test box
- VW 1594 connector test kit
- VAG 1527B voltage tester

Test conditions

- Throttle Position (TP) sensor G69 OK
- Fuse 18 OK

Test sequence

- Connect VAG 1551 scan tool.
  - Ignition switched on
- Press buttons -0- and -1- to insert "Engine Electronics" address word 01 ⇒ page 01-4 .
- Press -Q- button to confirm input.

Rapid data transfer **Select function XX**	**HELP**	⮜	Indicated on display - Operate VAG 1551 scan tool taking into account the information on the display: - Press buttons -0- and -3- to insert "Output Diagnostic Test Mode" function 03.
Rapid data transfer **03 - Output Diagnostic Test Mode**	**Q**	⮜	Indicated on display ***Note:*** *If something different is indicated on the display:* ⇒ *VAG 1551 scan tool operating instructions* Activate Cyl. 1 fuel injector N30: - Press -Q- button to confirm input.

01-41

Output Diagnostic Test Mode →

Injector, Cyl.1-N30

Indicated on display

If something different is displayed:

- Press → button repeatedly until "Select function XX" is displayed.
- Again select "Output Diagnostic Test Mode" function 03 and confirm with -Q- button.
- Open throttle valve fully and close again.

• Cyl. 1 fuel injector must click

Note:

All fuel injectors click extremely quietly!

To activate fuel injectors for Cyl. 2 through Cyl. 4, in each case:

- Open throttle valve fully again and close.

To skip individual tests:

- Press → button.

If one or more fuel injectors do not click:

- Continue output diagnostic test mode to the end.
- Switch ignition off.

Checking fuel injector actuation (resistance and current supply) ⇒ page 24-77 .

01-42

Activate idle air control valve N71:

- Press → button.

Output Diagnostic Test Mode →

Idle Air Control valve-N71

Indicated on display

- Idle air control valve must click, until switching to next component test by pressing → button.

If idle air control valve does not click:

- Disconnect harness connector from valve.
- Connect diode test lamp VAG 1527 to terminals 1 and 2 of detached connector, using adapter cables from VW 1594 test kit.

If LED flashes:

- Replace idle air control valve.

If LED does not flash:

- Switch ignition off.

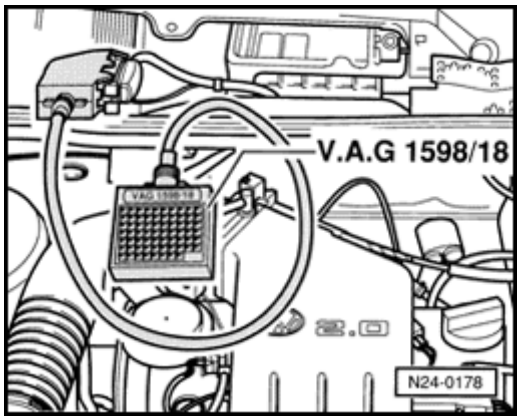

- Connect VAG 1598 test box to ECM wiring harness.
- Check wiring between test box and 2-pin connector for open circuit according to wiring diagram.
  - Connector terminal 1 to socket 27
  - Connector terminal 2 to socket 53
  - Wire resistance: Max. 1.5 Ω

01-43

- Check wiring between ECM connector and 2-pin connector terminal 2 for short to terminal 1 and/or chassis ground, according to wiring diagram.

  - Connector terminal 2 to socket 27

  - Specification: ∞ Ω (no continuity)

- Also check wiring for short to battery positive voltage (B+).

  - Specification: ∞ Ω (no continuity)

If no malfunction in wire is detected:

- Reconnect harness connector to valve.

- Replace Motronic ECM J220.

Activate EVAP canister purge regulator valve N80:

- Press → button.

Output Diagnostic Test Mode → <

EVAP Canister Purge Regulator Valve-N80

Indicated on display

- EVAP canister purge regulator valve N80 must click, until switching to next component test by pressing → button.

- Disconnect hose from valve N80 (from EVAP canister).

- Connect auxiliary hose.

- During test, blow into hose (in direction of throttle housing).

- Valve must open and close

01-44

If valve does not open and close:

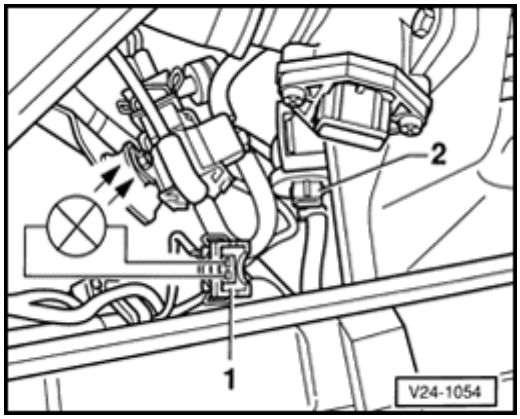

- Disconnect 2-pin connector from valve and connect diode test lamp VAG 1527 to disconnected connector, using adapter cables from VW 1594 test kit.
  - LED must flash

If LED flashes:

- Replace EVAP canister purge regulator valve N80.

If LED does not flash:

- Switch ignition off.

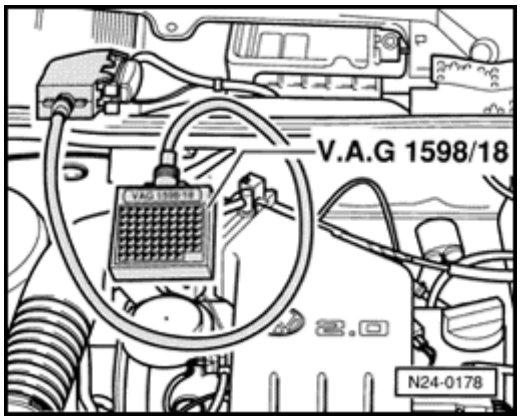

- Connect VAG 1598 test box to ECM wiring harness.
- Check wiring for open circuit between test box and 2-pin connector, according to wiring diagram.
  - Terminal 1 to socket 31
  - Specification: ∞ Ω (no continuity)

01-45

- Check wiring for open circuit between 2-pin connector terminal 2 and central electrics, according to wiring diagram.

  - Wire resistance: Max. 1.5 Ω

- Check wiring between ECM connector and 2-pin connector terminal 1 for short to terminal 2 and/or chassis ground, according to wiring diagram.

  - Connector terminal 2 to socket 31

  - Specification: ∞ Ω (no continuity)

- Also check wiring for short to battery positive voltage (B+).

  - Specification: ∞ Ω (no continuity)

If no malfunction in wire is detected:

- Reconnect connector to valve.

- Replace Motronic ECM J220.

Activate Heated Oxygen Sensor (HO2S) relay J278:

- Press → button.

Output Diagnostic Test Mode → <

Heated Oxygen Sensor Relay-J278

Indicated on display

- The oxygen sensor heating relay (on auxiliary relay panel) must click, until switching to next component test by pressing → button.

01-46

If relay does not click:

- Switch ignition off.

- Check HO2S relay J278 according to wiring diagram:

⇒ *Electrical Wiring Diagrams, Troubleshooting and Component Locations binder*

If an open circuit cannot be located:

- Replace HO2S relay J278 or Motronic ECM J220 as necessary.

Activate EGR vacuum regulator solenoid valve N18:

- Press → button.

Output Diagnostic Test Mode →

EGR Vac. Regulator Solenoid Valve-N18

Indicated on display

- EGR vacuum regulator solenoid valve N18 (two-way valve) must click.

If valve does not click:

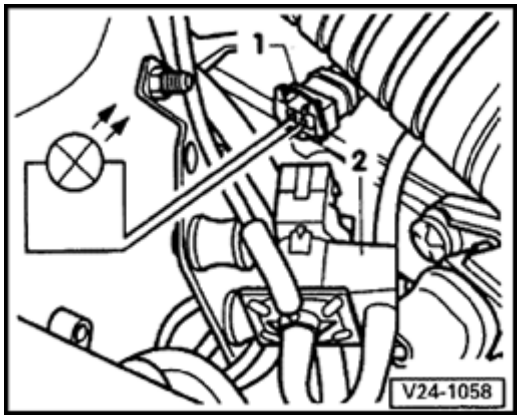

- Disconnect 2-pin connector from valve and connect diode test lamp VAG 1527 to disconnected connector, using adapter cable from VW 1594 test kit.

If LED flashes:

- Replace EGR vacuum regulator solenoid val N18.

01-47

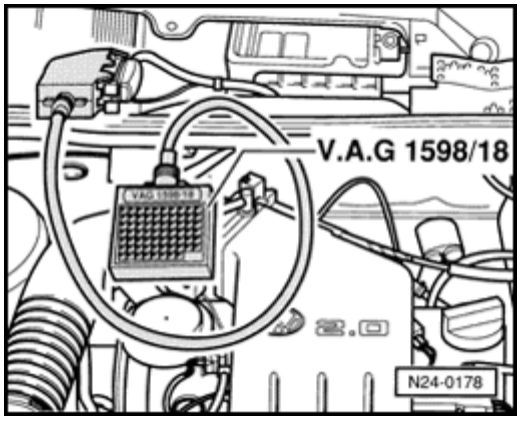

If LED does not flash:

- Switch ignition off.

- Connect VAG 1598 test box to ECM wiring harness.
- Check wiring for open circuit between test box and 2-pin connector terminal 2, according to wiring diagram.
  - Connector terminal 2 to socket 30
  - Wire resistance: Max. 1.5 Ω
- Check wiring for open circuit between 2-pin connector terminal 1 and central electrics, according to wiring diagram.
  - Wire resistance: Max. 1.5 Ω
- Check wiring between ECM connector and 2-pin connector terminal 2 for short to terminal 1 and/or chassis ground, according to wiring diagram.
  - Connector terminal 1 to socket 30
  - Specification: ∞ Ω (no continuity)
- Also check wiring for short to battery positive voltage (B+).
  - Specification: ∞ Ω (no continuity)

01-48

If no malfunction in wire is detected:

- Reconnect connector to valve.
- Replace Motronic ECM J220.
- Press → button.

Output Diagnostic Test Mode →

Intake Manifold Change-over Valve-N156

Indicated on display

- Ignore display.

Activate Secondary Air Injection (AIR) pump relay J299:

- Press → button.

Output Diagnostic Test Mode →

Secondary Air Injection Pump Relay-J299

Indicated on display

The AIR pump relay J299 activates the AIR solenoid valve N112 and the AIR pump motor V101.

If the motor does not run:

- Disconnect 2-pin harness connector from AIR pump motor V101.
- Connect diode test lamp VAG 1527 to disconnected harness connector, using adapter cables from VW 1594 test kit.

• LED must light up

If LED lights up (voltage supply OK):

- Replace AIR pump motor V101.

01-49

If LED does not light up:

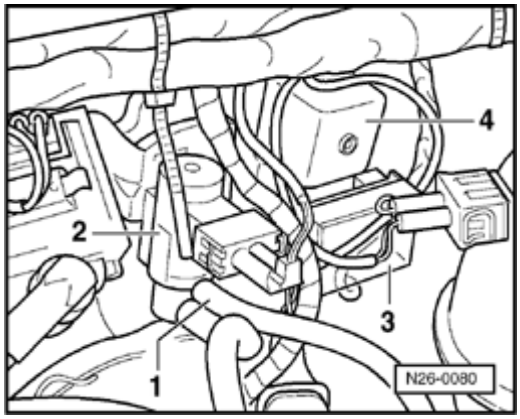

- Check fuse -3- on secondary air injection pump relay.

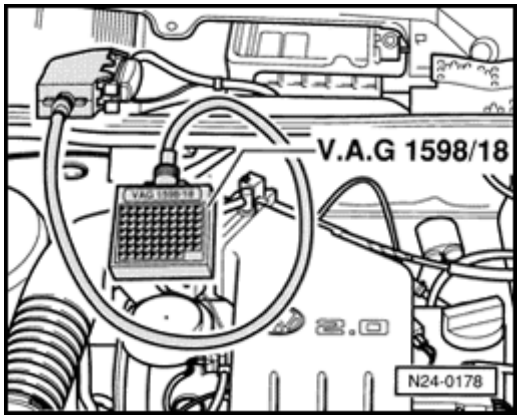

- Connect VAG 1598 test box to ECM wiring harness.
- Check wiring for open circuit between test box socket 50 and central electrics, according to wiring diagram.
  - Wire resistance: Max. 1.5 Ω
- Check AIR pump relay J299.

⇒ *Electrical Wiring Diagrams, Troubleshooting and Component Locations binder*

- Check wiring to AIR pump motor V101 according to wiring diagram.

If AIR solenoid valve does not switch:

- Disconnect 2-pin connector from AIR solenoid valve N112.

- Connect diode test lamp VAG 1527 to disconnected harness connector, using adapter cables from VW 1594 test kit.

  - LED must light up

If LED lights up (voltage supply OK):

- Replace AIR solenoid valve N112.

If LED does not light up:

- Check wiring to AIR solenoid valve N112 according to wiring diagram.

- Check AIR pump relay J299.

⇒ *Electrical Wiring Diagrams, Troubleshooting and Component Locations binder*

- Press → button.

- Press buttons -0- and -6- to select "End Output" function 06.

- Press -Q- button to confirm input.

Note:

The secondary air injection pump continues to run until 06 is entered to select the "End Output" function.

- Switch ignition off.

01-51

Read measuring value block (VAG 1551 function 04)

Note:

To change to another display group within function 04, proceed as follows:

Display group	VAG 1551	VAG 1552
Higher	Press key 3	Press ↑ key
Lower	Press key 1	Press ↓ key

Test conditions

- Control unit in "Basic Setting" function 04
- Vehicle stationary, engine idling
- Engine oil temperature min. 80 °C (176 °F)
- Electrical consumers switched off (radiator coolant fan must not run during the check)
- Air conditioner switched off

01-52

Display group overview

Display group 000 (decimal displayed value)												
• Engine running at idle speed, engine control module in "Basic Setting" function 04												
Display fields											**Specification**	**Corresponds to**
1	2	3	4	5	6	7	8	9	10	Ignition angle	93-76	2.25-15 ∠°
								Not relevant			---	---
							Air correction value				114-154	2.8-5.2 kg/h
						Learning value for full load adaption					92-164	0.7-1.3
					Learning value for part load adaption						---1)	---1)
				Learning value for idle adaption							83-241	0.87-1.22
			Oxygen sensor factor								92-164	0.7-1.3
		Engine speed (RPM)									80-88	800-880 RPM
	Engine load signal										26-44	1.3-2.2 ms
Engine coolant temperature											182-224	80°-110°C

1) Specification range not yet determined, will be published in a Technical Service Bulletin.

	Display fields			
	1	2	3	4
Display group 001				
Display	xxxx RPM	xxx °C	x.x	x.x ∠°
Indicated	Engine speed	Engine coolant temperature	Oxygen sensor factor	Ignition timing
Specification	800-880 RPM	80-110 °C	0.7-1.3	2.25-15 ∠°
Display group 002				
Display	xxxx RPM	xx.xx ms	xx.xx V	xxx.x °C1)
Indicated	Engine speed	Fuel injection period	Battery positive voltage (B+)	Exhaust temperature
Specification	800-880 RPM	2.8-5.2 ms	12.5-15 V	127.4 °C1)
Display group 003				
Display	xxxx RPM	xxx %	xx.xx ∠°	xx °C
Indicated	Engine speed	Engine load signal	Throttle valve angle	Intake manifold temperature
Specification	800-880 RPM	0-5 %	5-19 ∠°	Approx. ambient temperature

1) 127.4 °C will be displayed as the lowest figure.

	Display zones			
	1	2	3	4
Display group 004				
Display	xxxx RPM	xxx %	xxx Km/h	xxxxx
Indicated	Engine speed	Engine load signal	Road speed signal	Operating mode1)
Specification	800-880 RPM	0-5 %	0 Km/h	Relevance ⇒ page 01-55
Display group 005				
Display	xxxx RPM	xxx kg/h	xx %	xxxxx
Indicated	Engine speed	Learning value for idle stabilization	Idle air control valve duty cycle	Adjustment conditions1)
Specification	800-880 RPM	2.8-5.2 kg/h	50-60 %	Relevance ⇒ page 01-55
Display group 006				
Display	x.x	x.x	x.x	x.x
Indicated	Oxygen sensor factor	Learning value for idle adaption	Learning value for part load adaption	Learning value for full load adaption
Specification	0.7-1.3	0.87-1.22	---2)	0.7-1.3

1) Significance of figures in 5-digit number block ⇒ page 01-55 .

2) Specification range not yet determined, will be published in a Technical Service Bulletin.

01-55

Relevance of figures in 5-digit number block

Relevance when displayed digit = 1						
x	x	x	x	x	Adjustment condition (display group 005)	Operating mode (display group 04)
				1	Not relevant	Overrun
			1		Signal from automatic transmission	Idle
		1			Not relevant	Part load
	1				Air conditioner standby	Full load
1					Air conditioner compressor switched on	Acceleration

Additional measures see Repair procedures:

- Press → button to end "Read Measuring Value Block" function 04.

- After ending function 04, select "End Output" function 06 and press -Q- button to confirm.

24-1

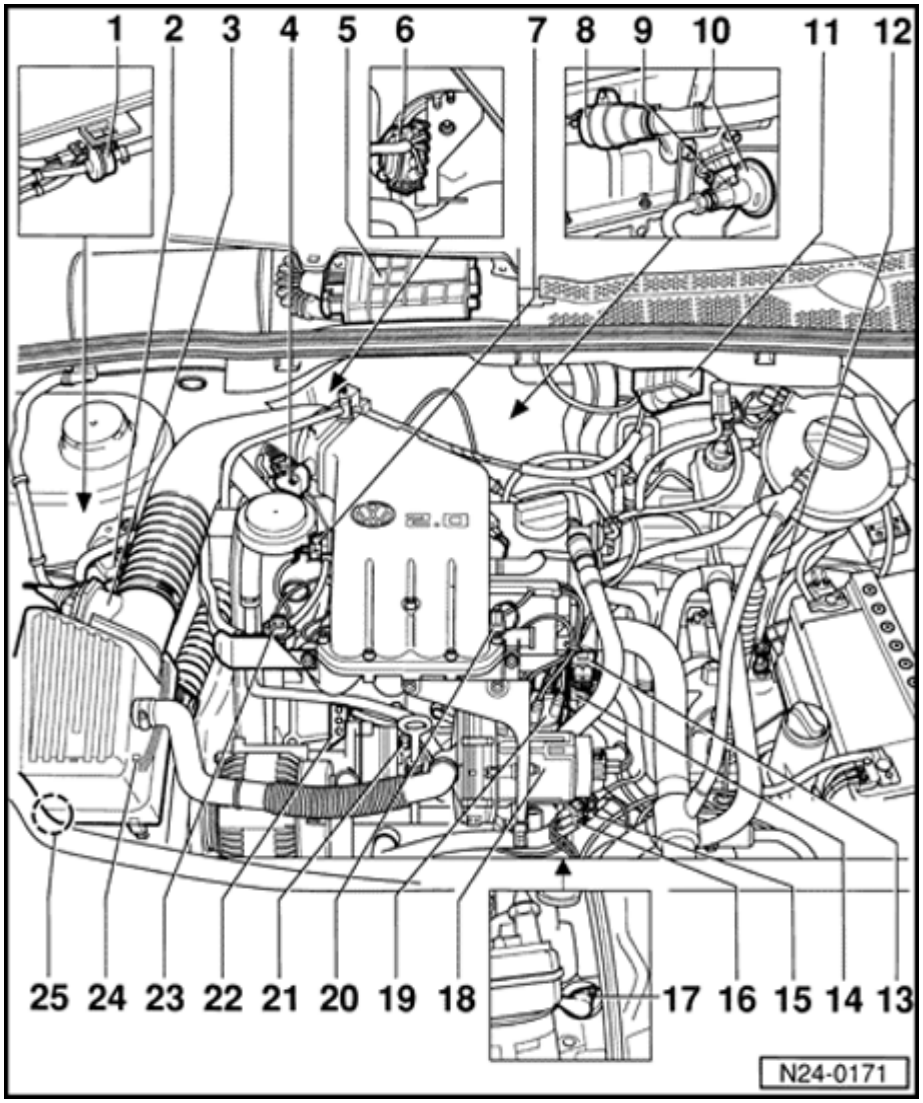

Motronic fuel injection and ignition system

Component overview

1 - Evaporative Emission (EVAP) canister purge regulator valve -N80-

- Activated charcoal filter system

Repair Manual, 2.0 Liter General, Engine, Repair Group 20

2 - EGR vacuum regulator solenoid valve - N18-

- Exhaust Gas Recirculation (EGR) system

⇒ *Repair Manual, 2.0 Liter General, Engine, Repair Group 26*

3 - Mass Air Flow (MAF) sensor - G70-

4 - Throttle Position (TP) sensor - G69-

5 - Motronic Engine Control Module (ECM) - J220-

6 - Harness connector

- 4-pin
- For Heated Oxygen Sensor (HO2S) and Oxygen Sensor (O2S) heater

24-2

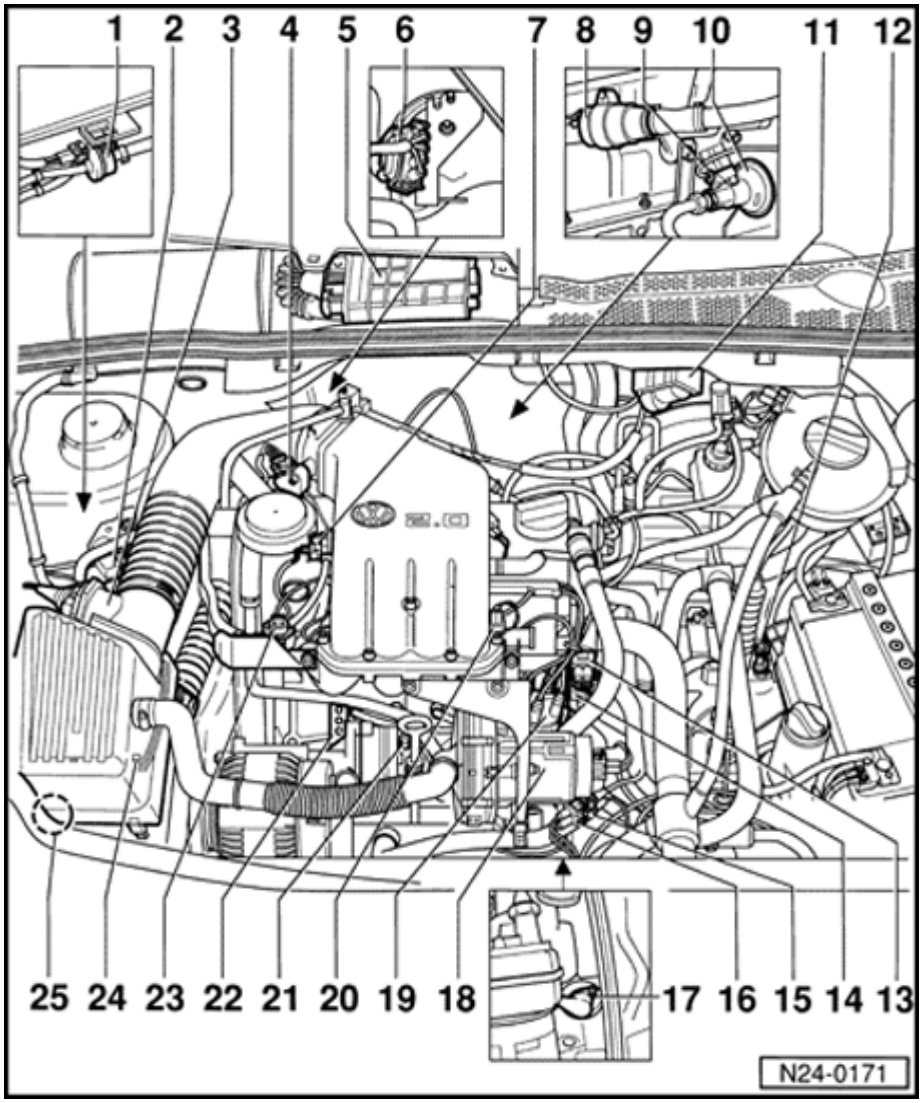

7 - Intake Air Temperature (IAT) sensor -G72-

8 - Idle Air Control (IAC) valve -N71-

9 - EGR temperature sensor - G98-

- Exhaust Gas Recirculation (EGR) system

⇒ *Repair Manual, 2.0 Liter General, Engine, Repair Group 26*

10 - EGR valve

- Exhaust Gas Recirculation (EGR) system

⇒ *Repair Manual, 2.0 Liter General, Engine, Repair Group 26*

11 - Ignition coil -N152-

- ⇒ page 28-4 , item 17

12 - Vehicle Speed Sensor

(VSS) -
G22-

24-3

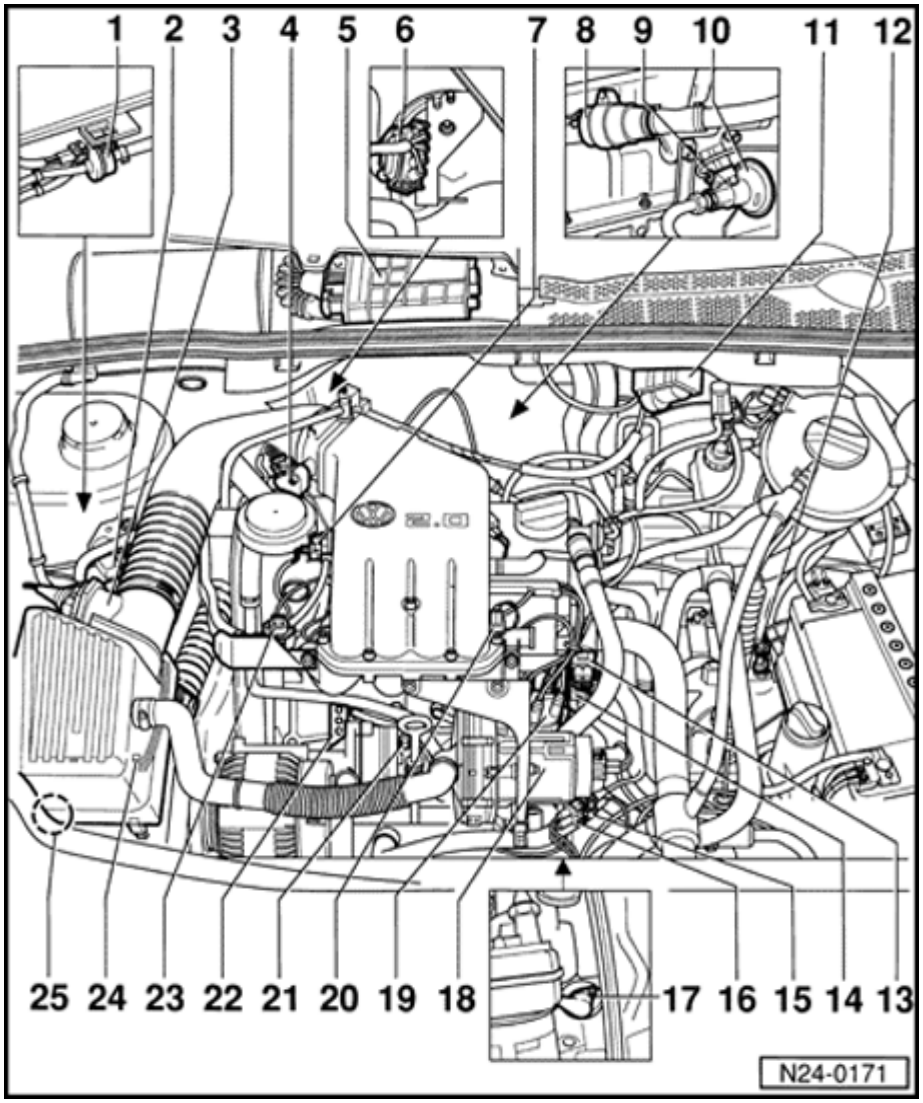

13 Engine - Coolant Temperature (ECT) sensor - G62-

- Color: black
- With ECT sensor - G2- for gauge

14 - Central connector

15 - 3-pin harness connector

- For knock sensor
- Color: blue

16 - 3-pin harness connector

- For RPM sensor G28

17 - Engine Speed (RPM) sensor - G28-

24-4

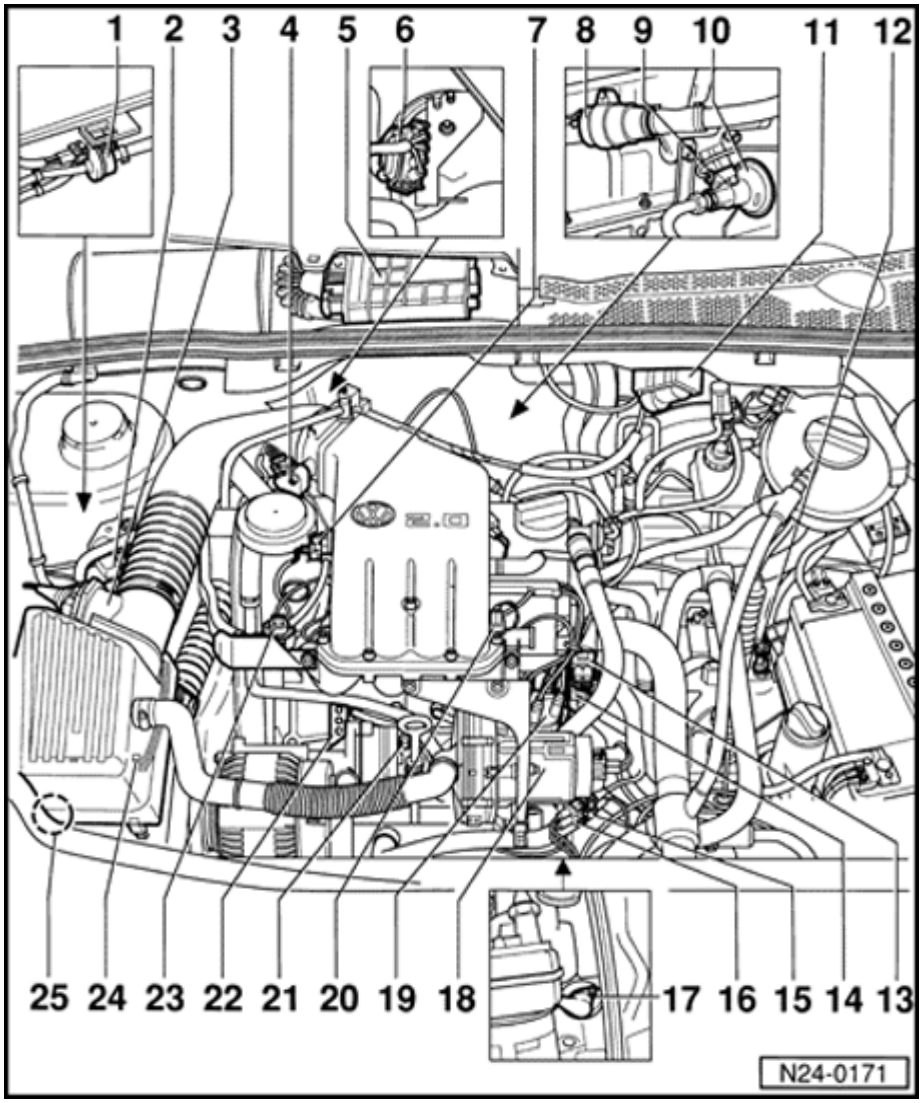

18 - Secondary Air Injection (AIR) pump motor - V101-

- Exhaust Gas Recirculation (EGR) system

⇒ *Repair Manual, 2.0 Liter General, Engine, Repair Group 26*

19 - Distributor with Camshaft Position (CMP) sensor - G40-

- ⇒ page 28-4

20 - Fuel injectors - N30-, - N31-, - N32-, - N33-

21 - Knock Sensor (KS) 1 - G61-

- ⇒ page 28-3 , item 10

22 - Ground (GND) connection

23 - Fuel pressure regulator

24 Temperature - regulator

- For intake air preheating

25 Evaporative - Emissions (EVAP) canister

- Activated charcoal filter
- Below air cleaner

⇒ *Repair Manual, 2.0 Liter General, Engine, Repair Group 20*

24-5

Motronic fuel injection system, servicing

Servicing ignition system ⇒ Repair Group 28

Note:

- *Fuel hoses in engine compartment must only be secured with spring type clips. The use of clamp or screw type clips is not permissible.*
- *The Engine Control Module (ECM) for the fuel injection and ignition system is equipped with Diagnostic Trouble Code (DTC) memory. Before carrying out troubleshooting, repairs or adjustment work, DTC memory must be checked for stored codes that indicate malfunctions, and the vacuum connections must be checked (intake air leaks).*
- *Components marked with an asterisk (*) are checked via the On Board Diagnostic program. Checking DTC memory ⇒ page 01-9 .*
- *Components marked with a double asterisk (**) are checked using the output Diagnostic Test Mode (DTM) ⇒ page 01-39 .*
- *For trouble-free operation of the electrical components, a battery positive voltage (B+) of at least 11.5 volts is necessary.*
- *Do not use sealants containing silicone. Particles of silicone drawn into the engine will not be burned in the engine and may damage the Heated Oxygen Sensor (HO2S) probe.*
- *Do not use contact sprays or similar agents in the area of the connector for HO2S probes. To function correctly, the HO2S probes require reference air, which they receive via the cable. If contact spray gets into the probe via this path*

it will lead to damage or sensor malfunctions.

24-6

- *During some checks the ECM will recognize test conditions as a problem and store a malfunction. Therefore, after completing all checks and repairs, the DTC memory must be checked and, if necessary, erased.* ⇒ *page 01-9* .

Safety precautions ⇒ page 24-19

Rules of cleanliness ⇒ page 24-21

Technical data ⇒ page 24-22

Checking engine operation ⇒ page 24-38

24-7

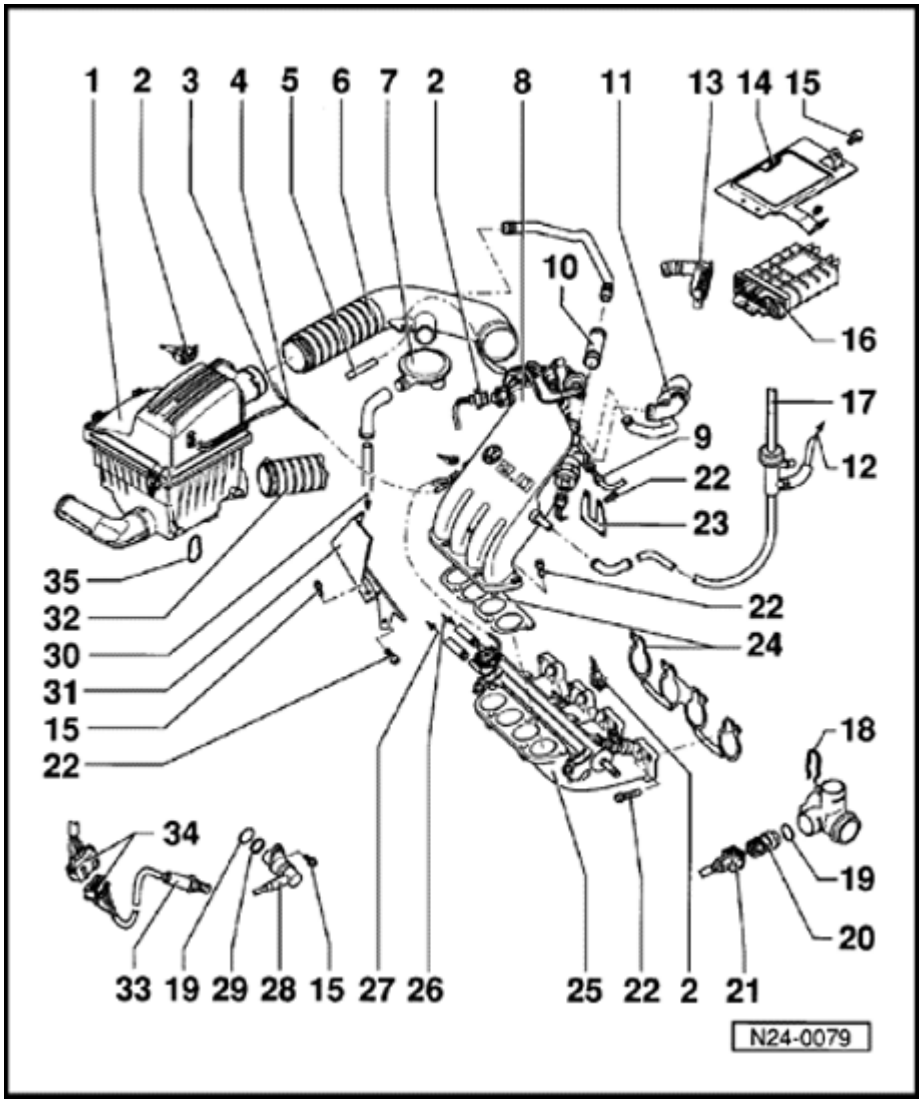

Components, removing and installing

1 - Air cleaner

- Disassembling and assembling ⇒ page 24-16

2 - Harness connector

- 4-pin
- For Mass Air Flow (MAF) sensor G70

3 - Vacuum pipe

- To EGR vacuum regulator solenoid valve N18 ⇒ page 24-1 , item 16

4 - Junction piece

5 - To EVAP canister purge regulator valve N80*/**

- Activated charcoal filter system

⇒ *Repair Manual, 2.0 Liter General, Engine, Repair Group 20*

6 - Intake air duct

7 - Crankcase breather pressure regulating valve

24-8

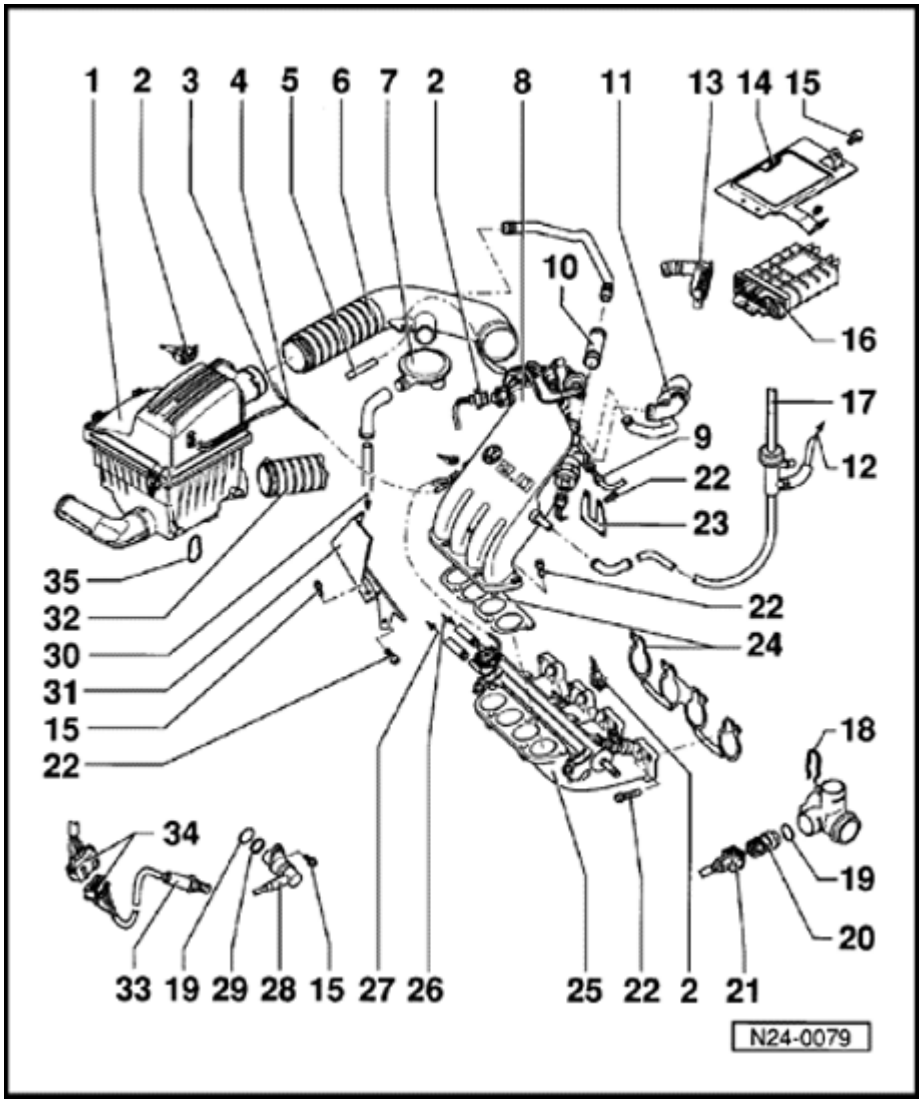

8 - Intake manifold, upper

- First attach and tighten to lower intake manifold, then to both rear supports - 23 -

- Disassembling and assembling ⇒ page 24-16

9 - 30 Nm (22 ft lb)

- EGR system

⇒ *Repair Manual, 2.0 Liter General, Engine, Repair Group 26*

10 - Connecting hose

11 - Silencer

- For idle air control valve

12 - To air conditioner

24-9

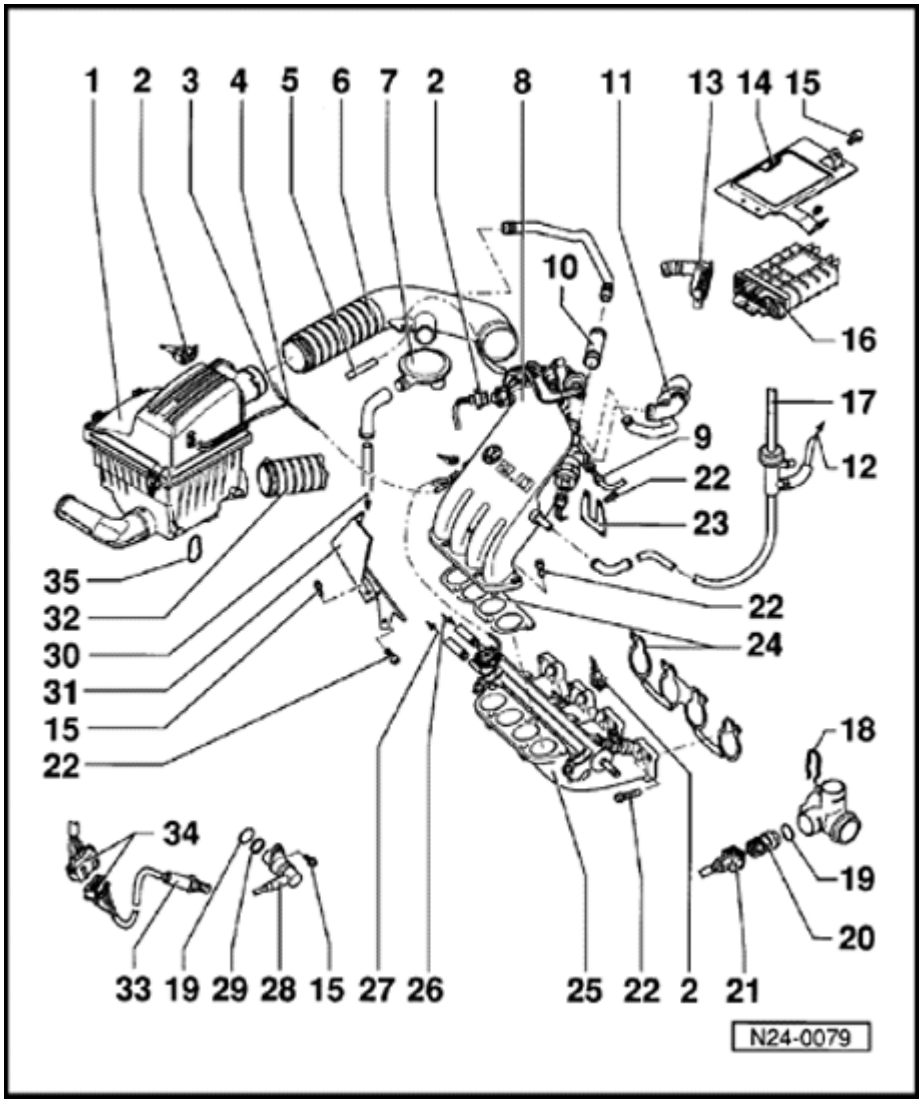

13 - Harness connector

- Only disconnect or connect with ignition switched off

14 - Mounting plate

- For Motronic ECM J220

15 - 10 Nm (7 ft lb)

16 - Motronic Engine Control Module (ECM) J220*

- Location: in plenum chamber, right

- For fuel injection system, Oxygen Sensor (O2S) control, EVAP canister purge regulator valve, speed governing

via fuel pump relay, idle air control, ignition and On Board Diagnostic (OBD)

- Check ECM coding ⇒ page 01-7

17 - To vacuum brake booster

24-10

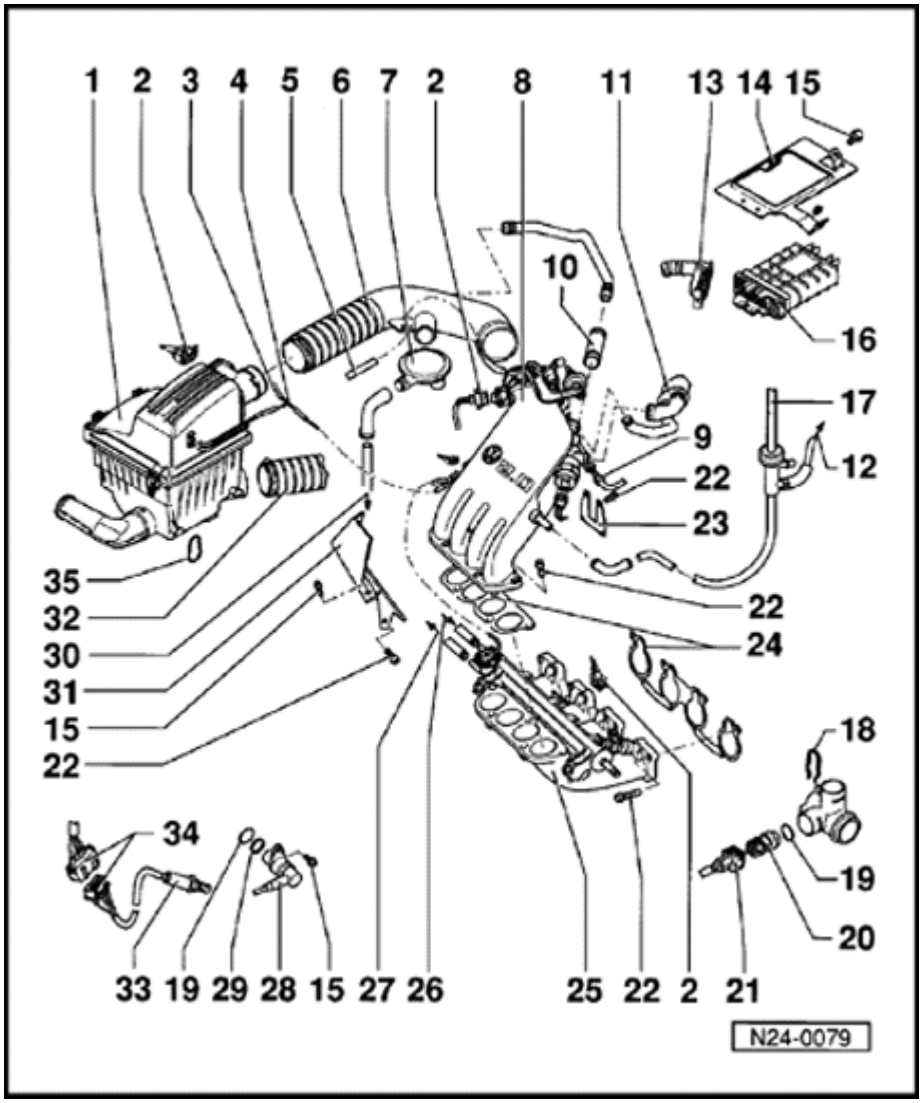

18 - Retaining clip

- Check that it is seated securely

19 - O-ring

- Replace if damaged

20 Engine - Coolant Temperature (ECT) sensor - G62-*

- Color: black
- With ECT sensor G2 for gauge
- For Motronic
- Checking ⇒ page 24-54
- Carefully relieve cooling system pressure before removing

21 - Harness connector

- 4-pin
- Terminals

1 and 3 for ECT sensor G62

22 - 20 Nm (15 ft lb)

23 - Support

- Between upper intake manifold and cylinder head
- Tighten only after tightening upper intake manifold to lower intake manifold

24 - Gasket

- Always replace

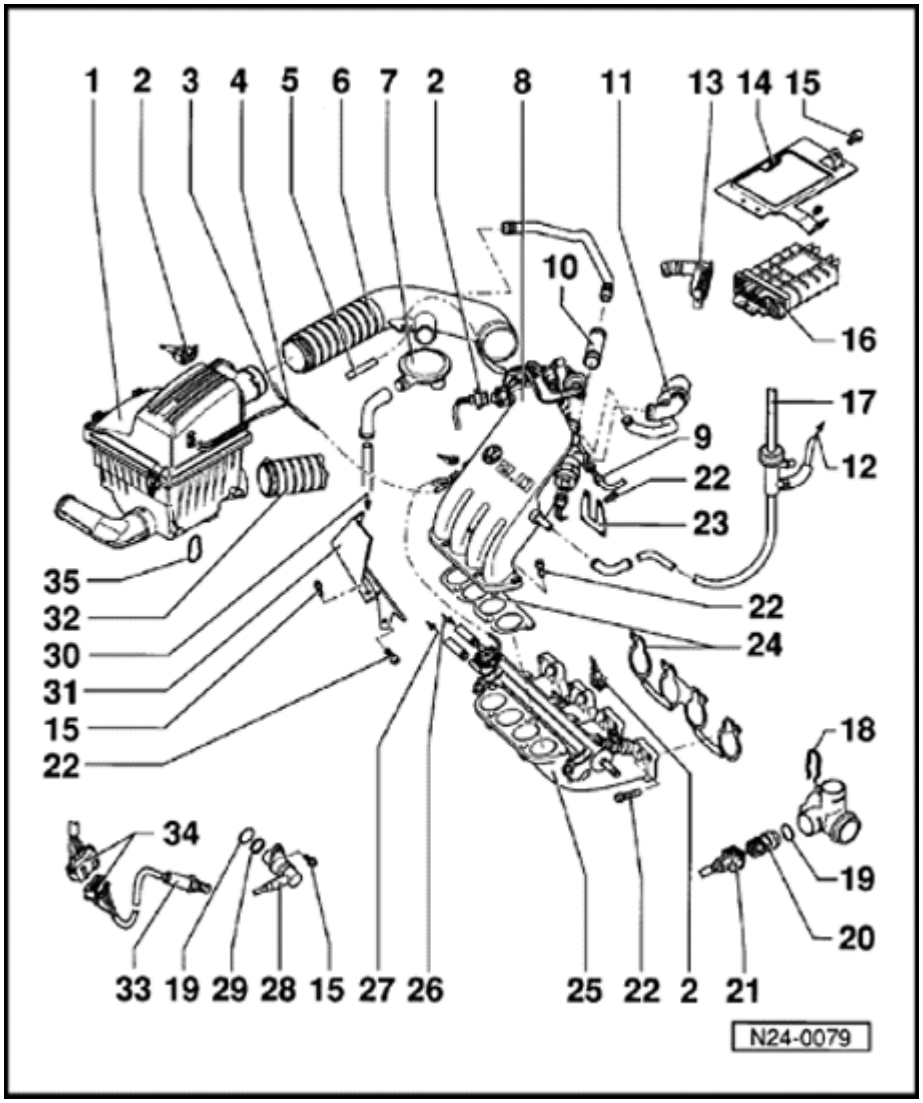

25 - Intake manifold, lower

- Disassembling and assembling ⇒ page 24-15

26 - Fuel supply hose

- White arrow
- Secure with spring-type clips
- From fuel pump module in fuel tank

27 - Return hose

- Blue arrow
- Secure with spring-type clips
- To fuel tank

28 - Engine Speed (RPM) sensor - G28-*

29 - Spacer

30 - To cylinder block

31 - Deflector

32 - Hose

- To warm air collection plate on exhaust manifold

⇒ *Repair Manual, 2.0 Liter General, Engine, Repair Group 26*

24-12

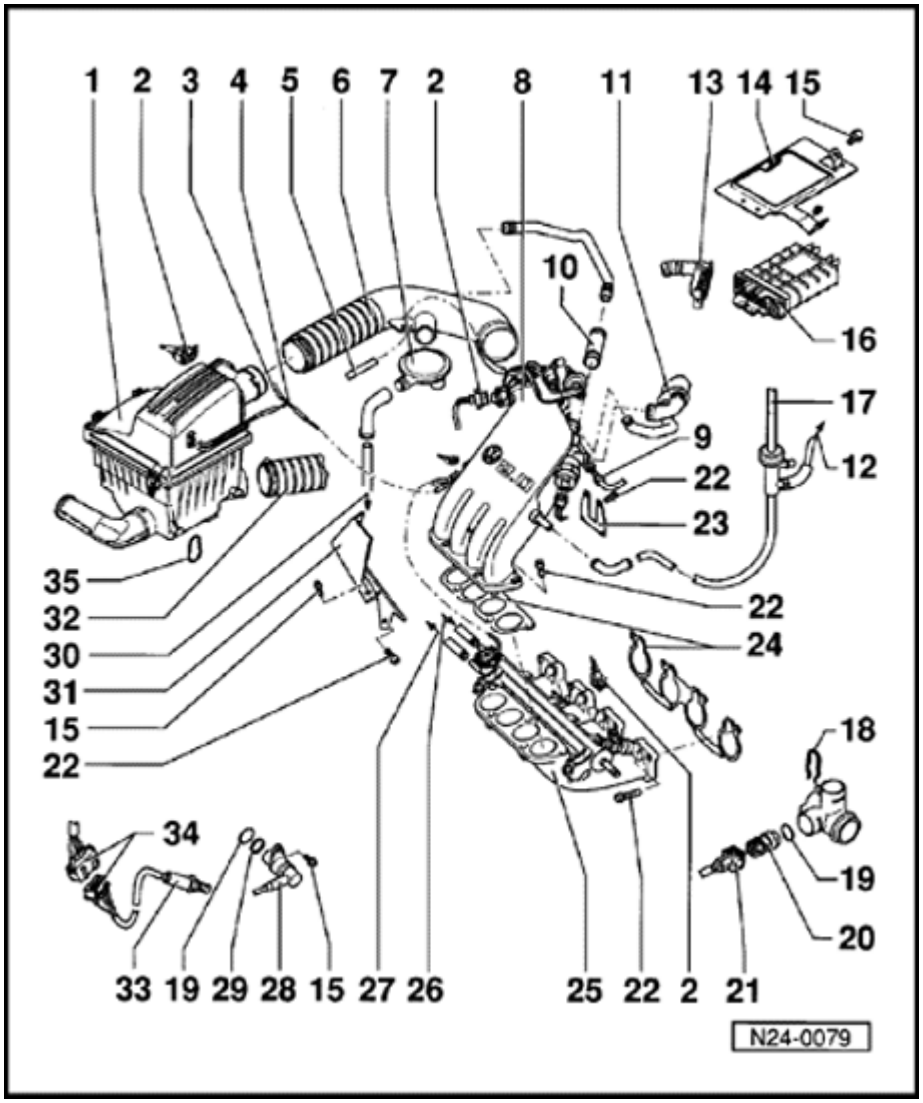

33 - Heated Oxygen Sensor (HO2S) - G39-*

- Tightening torque: 50 Nm (37 ft lb)
- Location: Three Way Catalytic Converter (TWC)
- Only lubricate threads with "G5"
- Lubricant must not get into slots on probe body
- Check heating voltage supply via Heated Oxygen Sensor (HO2S) relay J278
- Checking HO2S and oxygen sensor control ⇒

page 24-30

- Checking oxygen sensor heating ⇒ page 24-36

34 - Harness connector

- 4-pin
- For HO2S probe and heating circuit
- Mounted to rear engine mount on right, in direction of travel

35 - Retaining ring

24-13

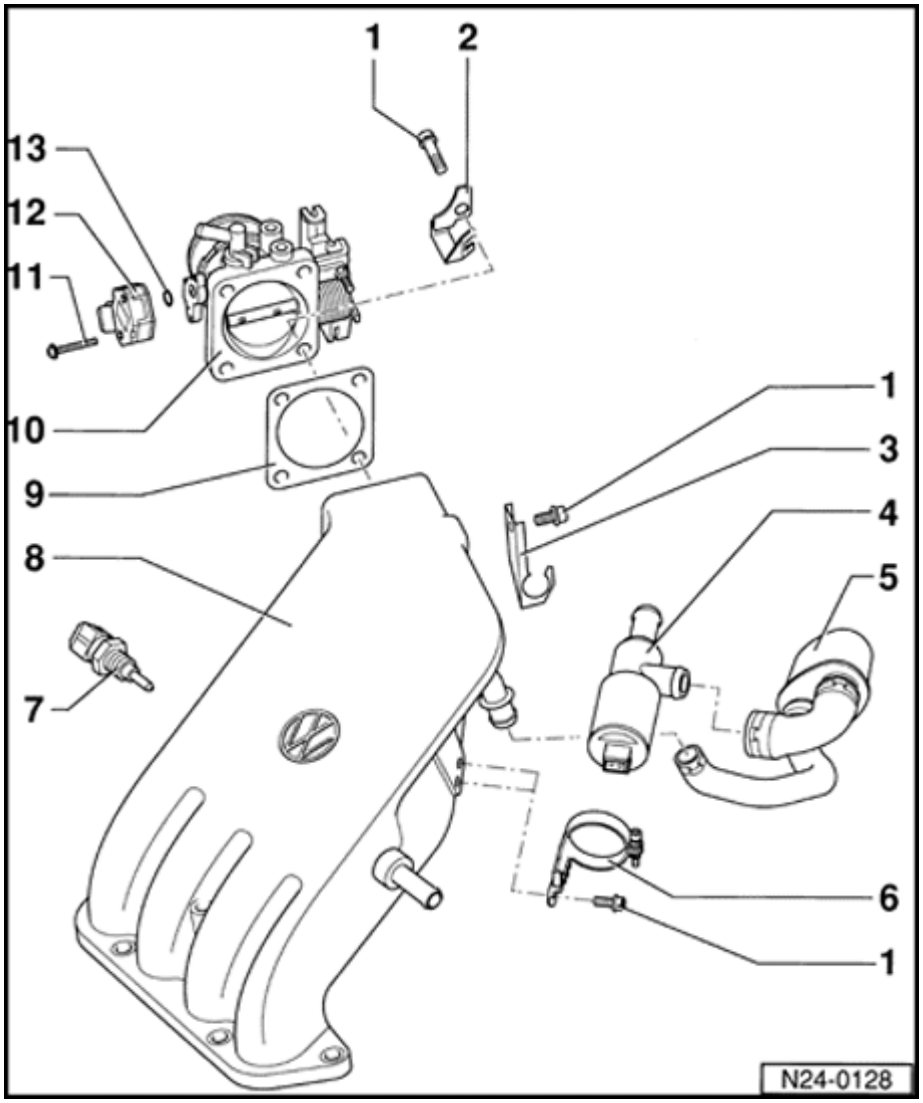

Intake manifold, upper, disassembling and assembling

1 - M6: 10 Nm (7 ft lb)M8: 20 Nm (15 ft lb)

2 - Retainer

- For wiring to EGR valve

3 - Support bracket

- For accelerator pedal cable
- Adjusting ⇒ Repair Manual, 2.0 Liter General, Engine, Repair Group 20

4 - Idle Air Control (IAC) valve -N71-*/**

- Resistance: 7-10 Ω

5 - Silencer

- For idle air control

valve

6 - Retaining ring

7 - Intake Air Temperature (IAT) sensor -G72-*

- Tightening torque: 10 Nm (7 ft lb)
- Checking ⇒ page 24-59

24-14

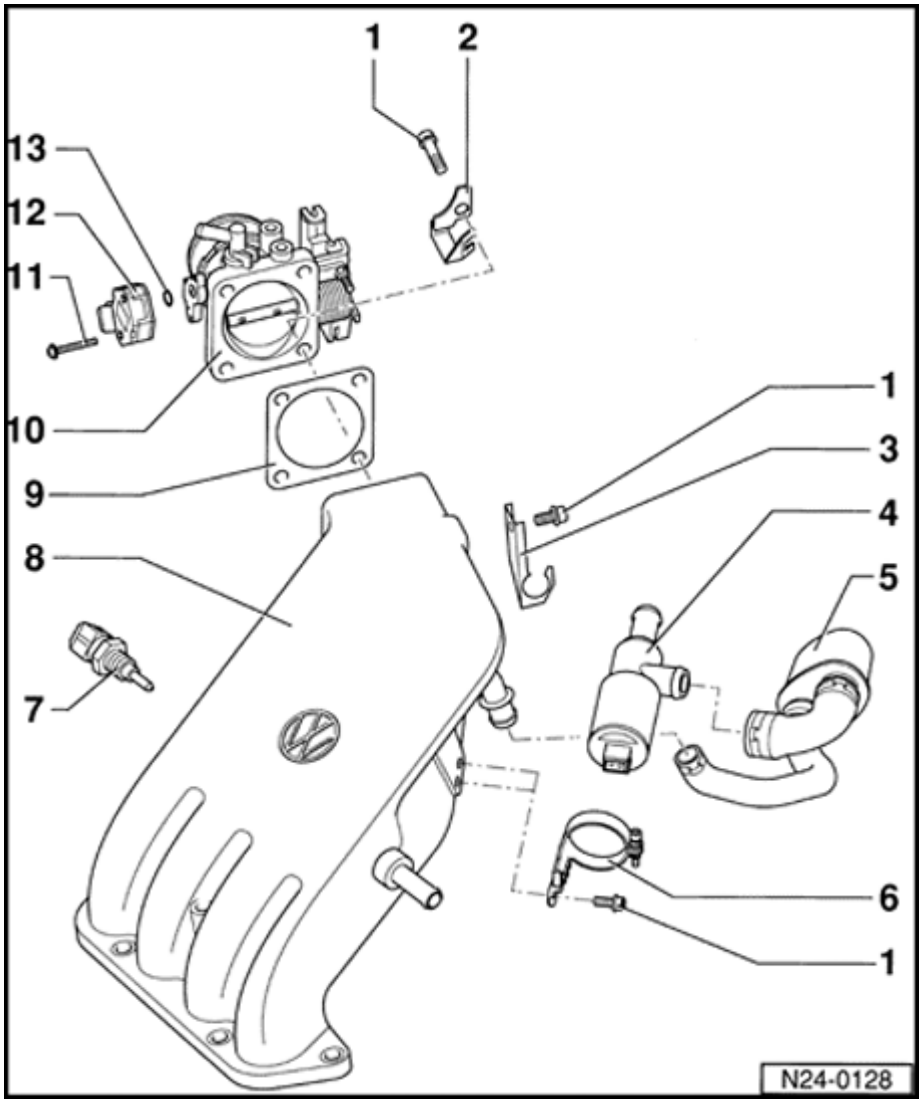

8 - Intake manifold, upper

9 - Gasket

- Always replace

10 - Throttle valve housing

- If throttle valve basic setting stop screw has been altered, replace throttle valve housing

11 - 3 Nm (27 in lb)

12 - Throttle Position (TP) sensor - G69-*

- 3-pin for Motronic

- 4-pin additional with automatic transmission, for Transmission Control Module (TCM) -J217-

Checking

- ⇒ page 24-46

- Automatic transmission only: after removing and installing TP sensor, TCM J217 and TP sensor G69 must be matched to one another ⇒ page 24-53

13 - O-ring

- Replace if damaged

24-15

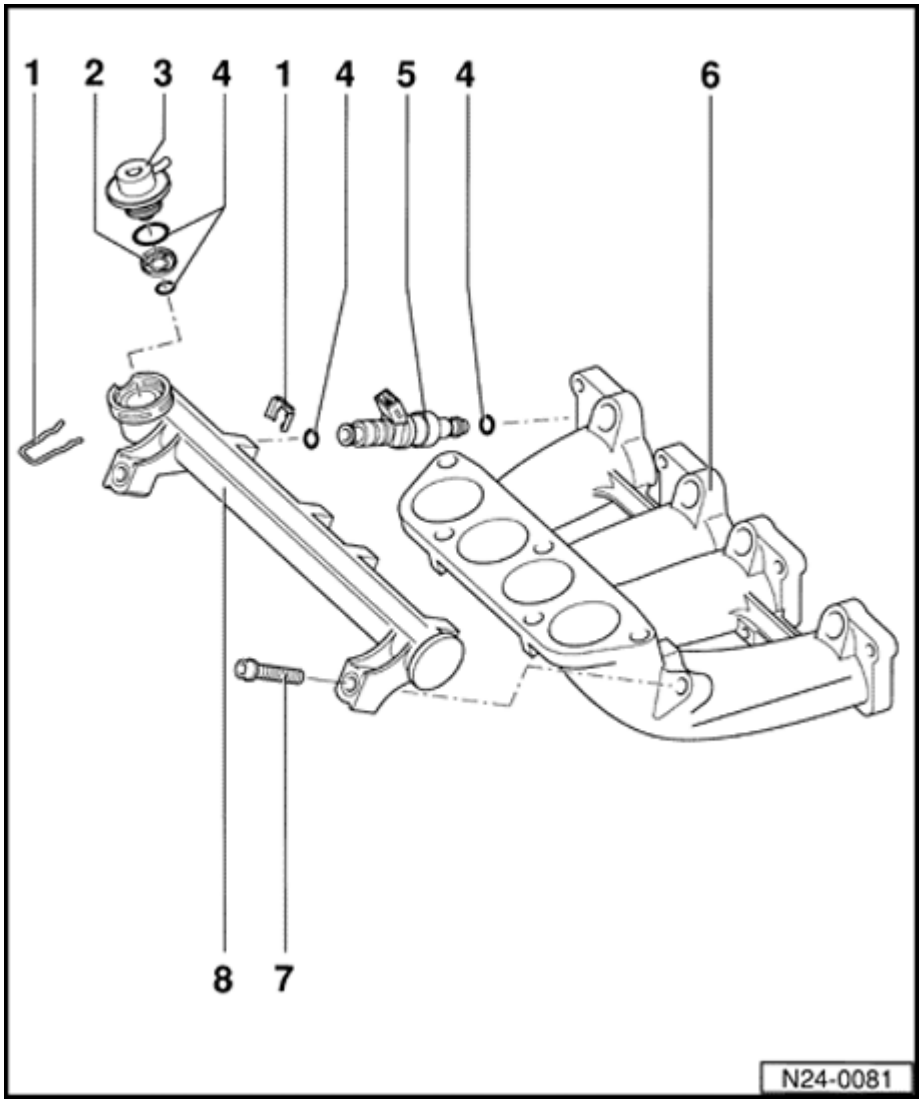

Intake manifold, lower, disassembling and assembling

1 - Retaining clip

- Check that it is securely seated

2 - Strainer

3 - Fuel pressure regulator

- Checking ⇒ page 24-82

4 - O-ring

- Replace if damaged

5 - Fuel injectors - N30-, - N31-, - N32- and - N33-*/**

- Checking ⇒ page 24-77

6 - Intake manifold, lower

7 - 10 Nm (7 ft lb)

8 - Fuel rail

24-16

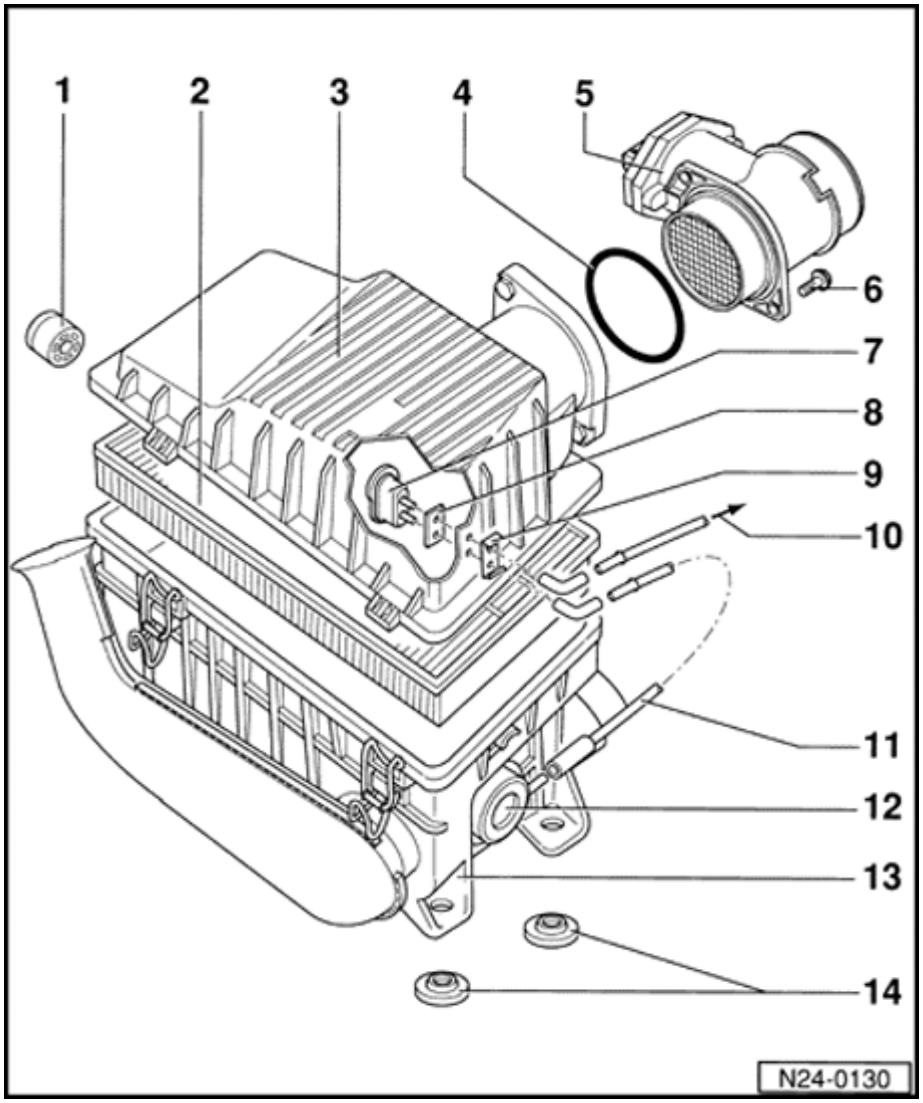

Air cleaner, disassembling and assembling

1 - Rubber mount

2 - Air cleaner element

3 - Air cleaner housing, upper

4 - O-ring

- Replace if damaged

5 - Mass Air Flow (MAF) sensor - G70-*

6 - 10 Nm (7 ft lb)

7 - Temperature regulator

- For intake air preheating
- Metal connecting pipe or with notch to regulating flap
- Checking intake air preheating ⇒ page 24-87

8 - Gasket

- Replace if damaged

9 - Mounting plate

24-17

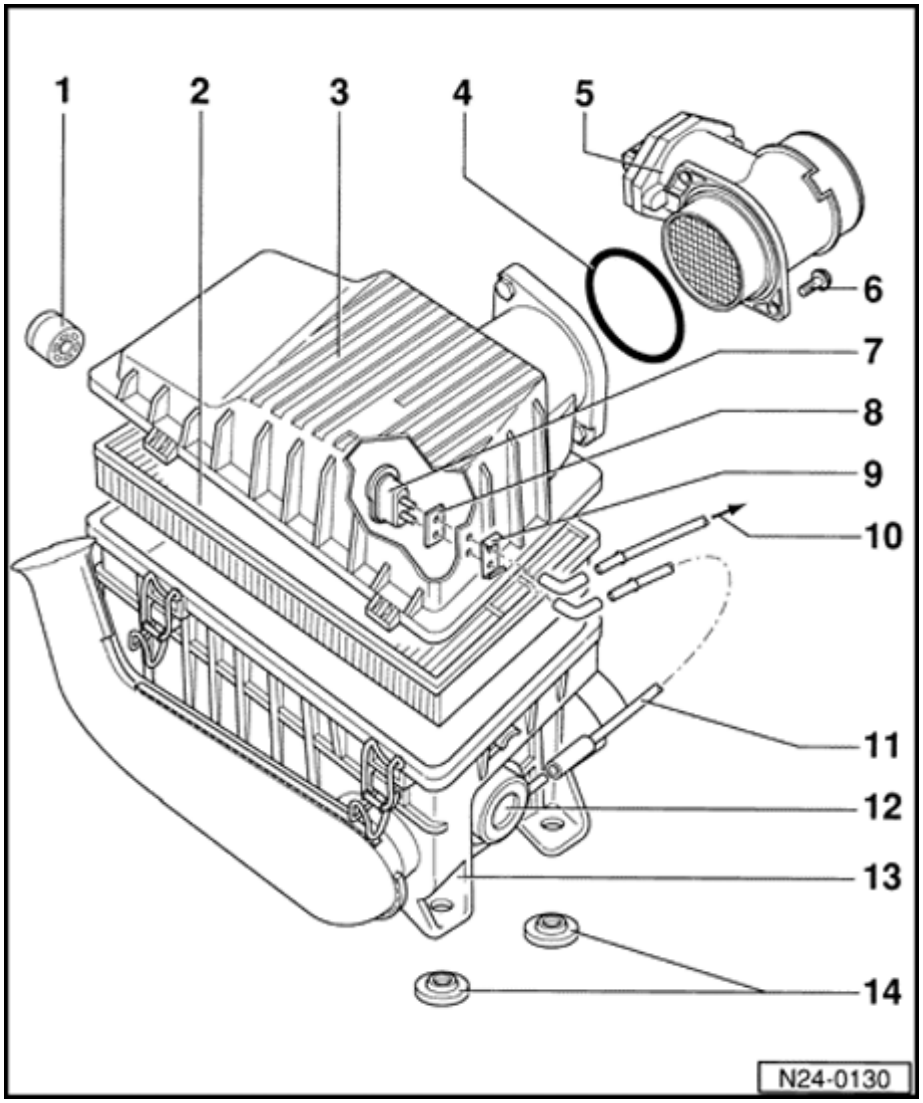

10 - To intake air duct

11 - Vacuum line

12 - Vacuum unit

13 - Air cleaner housing, lower

14 - Bushing

24-18

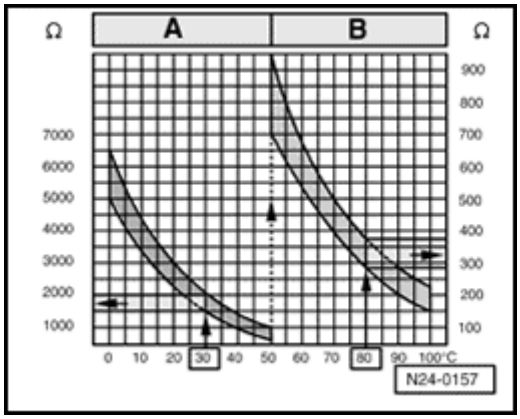

Fig. 1 Temperature sensor resistance

The diagram is valid for engine coolant temperature sensor G62 and intake air temperature sensor G72.

A - resistance values for the temperature range 0 °-50 °C (32 °-122 °F)

B - resistance values for the temperature range 50 °-100 °C (122 °-212 °F)

Examples:

- 30 °C corresponds to a resistance value of 1500-2000 Ω
- 80 °C corresponds to a resistance value of 275-375 Ω

Safety precautions

WARNING!

Be alert when working on or near the engine. High ignition secondary voltage can cause serious personal injury and damage vehicle components.

- ***DO NOT touch or disconnect ignition system wires when the engine is running or being cranked at starting RPM.***
- ***DO NOT operate the starter if the fuel injectors have been removed.***

Be sure the ignition is switched OFF, when:

- ***Disconnecting ignition wires***
- ***Disconnecting fuel injection system wiring***
- ***Connecting or disconnecting test equipment leads***
- ***Disconnecting the battery***
- ***Washing the engine or engine compartment.***

BEFORE cranking the engine at starting RPM (such as for compression testing) disable the ignition and fuel injection systems:

- ***Disconnect the ignition coil power output stage.***
- ***Disconnect harness connectors from all fuel injectors.***

- ***After the work is completed, erase Diagnostic Trouble Code (DTC) memory.***

24-20

CAUTION!

BEFORE disconnecting the battery:

- ***Stop the engine.***
- ***Be sure the ignition is switched OFF (also applies when connecting the battery). Failure to do so may damage the Engine Control Module (ECM).***
- ***Be sure of the proper radio code (for vehicles equipped with coded anti-theft radio).***

Be sure the battery negative (-) cable is disconnected, when:

- ***Working on the electrical system***
- ***Resistance (spot) welding or electric arc welding anywhere on the vehicle.***

When connecting and disconnecting electrical test equipment (LED voltage tester, multimeter, etc.):

- ***Be sure the ignition is switched OFF.***
- ***Use correct adapters from the VW 1594 connector test kit.***

For any work affecting the Engine Control Module (ECM):

- ***BEFORE disconnecting the ECM harness connector, switch the ignition OFF and WAIT at least 20 seconds. Failure to do so may damage the ECM.***
- ***DO NOT connect any outside voltage source to stimulate an output signal at the ECM.***

24-21

Rules for cleanliness

CAUTION!

Whenever carrying out work on the fuel supply and fuel injection systems, carefully observe the following five rules of cleanliness.

1 - Thoroughly clean fuel system line and hose connections and the surrounding area before disconnecting.

2 - Place removed components on a clean surface and cover. Use plastic sheeting or paper. Do not use fluffy rags that could leave lint!

3 - Carefully cover over or seal any components that have been opened if repairs are not carried out immediately.

4 - Install only clean parts:

Do not remove replacement parts from the packaging until immediately before they are to be installed.

Do not use parts that have been stored without packaging (e.g. in toolboxes, etc.).

5 - When the fuel system is opened:

Avoid working with compressed air whenever possible.

Avoid moving the vehicle if possible.

Technical data

Engine code		ABA
Idle check 1)		
Idle speed 2)	RPM	800-880 2)
Oxygen sensor factor		1.00 ± 0.25 2)3)
Motronic Engine Control Module (ECM)4)		
Part number		⇒ Parts catalog microfiche
Governed engine speed	RPM	5800-6000

1) Observe test conditions ⇒ page 24-23

2) Not adjustable

3) Display fluctuates

4) If replaced carry out idle check ⇒ page 24-23

24-23

Idle check

- *Idle speed, ignition timing and oxygen sensor factor (CO content) are not adjustable.*
- *The idle speed is held to specification by altering the ignition timing, Digital Idle Stabilization (DIS) function.*
- *The position of the distributor housing has no influence on ignition timing.*
- *CO content is regulated by oxygen sensor control. Malfunctions in oxygen sensor control are detected by the On Board Diagnostic program and stored in Diagnostic Trouble Code (DTC) memory.*

Special tools, testers and auxiliary items

- VAG 1551 Scan Tool (ST) with VAG 1551/3 adapter cable

Test conditions

- Engine oil temperature 80 °C (176 °F) minimum
- Electrical consumers switched off (radiator coolant fan must not run during the check)
- Air conditioner switched off
- Exhaust system must be free of leaks
- No malfunctions stored in DTC memory ⇒ page 01-9
- VAG 1551 Scan Tool (ST) connected

24-24

Test sequence

- Start engine and run at idle speed.
- Operate VAG 1551 scan tool taking into account the information on the display
- Press button -1- to select "Rapid data transfer" operating mode.
- Press buttons -0- and -1- to insert "Engine Electronics" address word 01.
- Press -Q- button to confirm input.
- Press → button.
- Press buttons -0- and -4- to select "Basic Setting" function 04.
- Press -Q- button to confirm input.

Basic setting **HELP** ⮜

Input display group number XXX

Indicated on display

- Press -0-, -0- and -1- to input display group number 001.
- Press -Q- button to confirm input.

Basic setting 1 → ⮜

1 2 3 4

Indicated on display (1, 2, 3 and 4 = Display fields)

Note:

In the "Basic Setting" function the EVAP canister purge regulator valve N80 is closed and the Malfunction Indicator Lamp (MIL) in the instrument cluster lights up.

24-25

CAUTION!

Do not continue with the check until engine coolant temperature exceeds 80 ° C (display field 2).

- Briefly increase engine speed (RPM) by pressing on accelerator pedal, then allow engine to run at idle speed for 2 minutes.

- Read values displayed for RPM, oxygen sensor factor and ignition timing.

Display field	Description	Specification
1	Engine speed (RPM)	800-880
2	Engine coolant temperature	at least 80 ° C
3	Oxygen sensor factor	1.00 ± 0.3 fluctuating
4	Ignition timing	2.25-15 ∠ ° before TDC

- Press → button.

- Press buttons -0- and -6- to select "End Output" function 06.

- Press -Q- button to confirm input.

24-26

If RPM specifications are not attained:

- Switch ignition off.
- Check accelerator pedal mechanism for ease of operation.
- Disconnect harness connector from Motronic ECM, then reconnect.
- Carry out test drive, check DTC memory, and check idle speed again.

24-27

Idle air control, checking

Functional check

- Functional check ⇒ Output Diagnostic Test Mode (DTM), page 01-39 .

Special tools, testers and auxiliary items

- VAG 1551 Scan Tool (ST) with VAG 1551/3 adapter cable

Test sequence

- Start engine and run at idle speed.

- Connect VAG 1551 scan tool and select "Rapid data transfer" operating mode.

- Press buttons -0- and -1- to insert "Engine Electronics" address word 01. Carry out selection at idle ⇒ page 01-4 .

Rapid data transfer **HELP** ⮜ Indicated on display

Select function XX

- Press buttons -0- and -8- to select "Read Measuring Value Block" function 08.

- Press -Q- button to confirm input.

Read measuring value block **HELP** ⮜ Indicated on display

Input display group number XXX

24-28

- Press -0-, -0- and -1- to input display group number 001.

- Press -Q- button to confirm input.

Read measuring value block 1 →

1 2 3 4

Indicated on display (1, 2, 3 and 4 = Display fields)

Note:

If something different is indicated on the display:

⇒ *VAG 1551 scan tool operating instructions*

CAUTION!

Do not continue with the check until engine coolant temperature exceeds 80 ° C (display field 2).

- Briefly increase engine speed (RPM) by pressing on accelerator pedal, then allow engine to run at idle speed for 2 minutes.
- Press -C- button.
- Press -0-, -0- and -5- to input display group number 005.
- Press -Q- button to confirm input.

Read measuring value block 5 →

1 2 3 4

Indicated on display (1, 2, 3 and 4 = Display fields)

- Read and record duty cycle in display field 3.

24-29

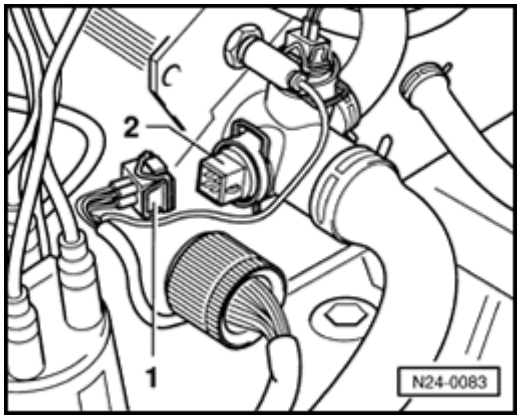

- Disconnect harness connector -1- from engine coolant temperature sensor -2-.

  - Duty cycle must increase, then drop again to original value.

Note:

Test can only be repeated after the DTC memory has been erased.

- Reconnect engine coolant temperature sensor connector.
- Press → button.
- Press buttons -0- and -2- to select "Check DTC Memory" function 02.
- Press -Q- button to confirm input.
- Press → button until all malfunctions still stored have been displayed.

Rapid data transfer	**HELP**
Select function XX	

- Indicated on display
- Press buttons -0- and -5- to select "Erase DTC Memory" function 05.
- Press -Q- button to confirm input.
- Press → button.
- Press buttons -0- and -6- to select "End Output" function 06.
- Press -Q- button to confirm input.

24-30

Heated Oxygen Sensor (HO2S) and oxygen sensor control, checking

Special tools, testers and auxiliary items

- VAG 1551 Scan Tool (ST) or vehicle system tester VAG 1552 with VAG 1551/3 adapter cable
- VAG 1598/18 test box
- Multimeter (Fluke 83 or equivalent)
- VW 1594 connector test kit
- Wiring diagram

Checking conditions

- Coolant temperature at least 80 °C (176 °F)
- Exhaust system free of leaks between cylinder head and Three Way Catalytic Converter (TWC)

Functional check

- Connect VAG 1551 scan tool ((VAG 1552) and select "Rapid data transfer" operating mode.
- Press buttons -0- and -1- to insert "Engine Electronics" address word 01. Carry out selection at idle ⇒ page 01-4 .

24-31

Rapid data transfer **Select function XX**	**HELP**	⮜	Indicated on display - Press buttons -0- and -8- to select "Read Measuring Value Block" function 08. - Press -Q- button to confirm input.
Read measuring value block **Input display group number XXX**	**HELP**	⮜	Indicated on display ***Note:*** *If something different is indicated on the display:* ⇒ *Scan tool operating instructions* - Press -0-, -0- and -1- to input display group number 001. - Press -Q- button to confirm input.
Read measured value block 1 **1 2 3 4**	→	⮜	Indicated on display (1, 2, 3 and 4 = Display fields) - Read oxygen sensor factor in display field 3. Specification: display fluctuates around 1 If oxygen sensor factor does not fluctuate: - Carry out road test to clean HO2S probe, then repeat check. If the oxygen sensor factor specification is not attained: - Check oxygen sensor heating ⇒ page 24-36 .

24-32

If the displayed value remains constant:

- Press → button.
- Press buttons -0- and -6- to select "End Output" function 06.
- Press -Q- button to confirm input.
- Switch ignition off.
- Continue check according to following table.

Display	Cause	Continuation of check
approx. 1.60 V	Open circuit	Check basic voltage ⇒ page 24-33
approx. 2.51 V	Short circuit to positive (B+)	Check HO2S wiring ⇒ page 24-33
approx. 1.29 V	Short circuit to ground	
fluctuating between 0.7 V and 1.3 V	Control OK	---

24-33

Checking basic voltage

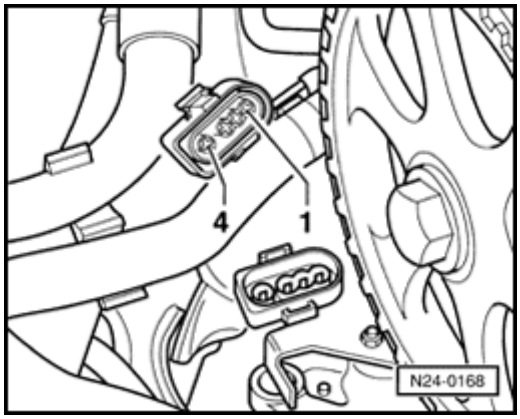

- Separate 4-pin HO2S harness connector.
- Start engine and run at idle speed.
- Connect multimeter to measure voltage at connector terminals 3 and 4 of connector.

  Specification: Approx. 0.45 volts
- Switch ignition off.

If the specification is not attained:

- Check HO2S wiring.

Checking HO2S wiring

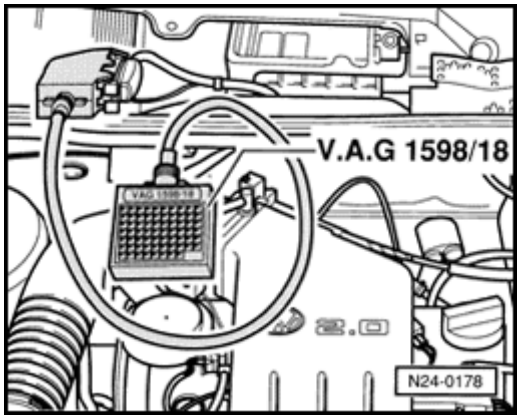

- Connect VAG 1598/18 test box to ECM wiring harness.

24-34

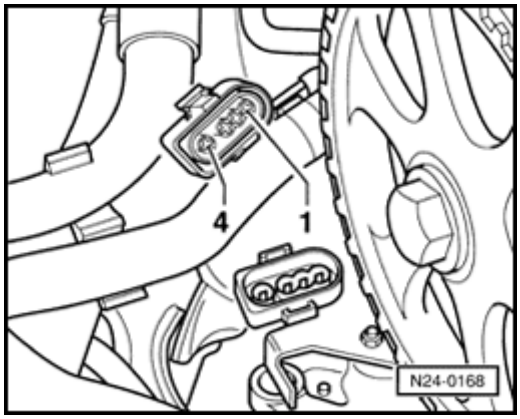

- Separate 4-pin HO2S harness connector.
- Check wiring for open circuits between test box and 4-pin connector, according to wiring diagram.
  - Terminal 3+socket 42
  - Terminal 4+socket 20
  - Wire resistance: Max. 1.5 Ω

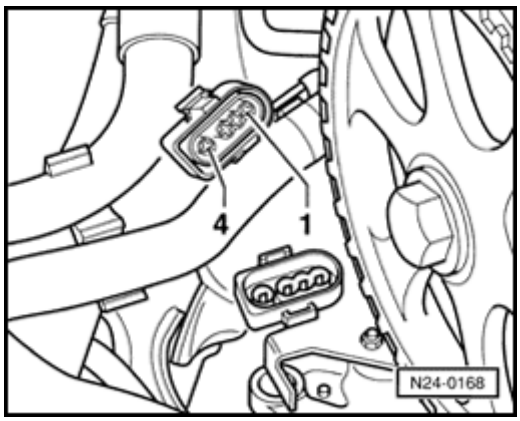

- Check wires at 4-pin connector for shorts to one another.
  - Terminal 1 and test box socket 20
  - Terminal 1 and socket 42
  - Terminal 2 and test box socket 42
  - Terminal 2 and socket 20
  - Terminal 3 and test box socket 20
  - Specification: ∞ Ω

24-35

- Check shielding for short to HO2S wiring according to wiring diagram.

  - Terminal 3 and test box socket 56
  - Terminal 4 and test box socket 56
  - Specification: $\infty\ \Omega$

If the specifications are not attained:

- Check wiring according to wiring diagram.

If no wiring malfunction is detected:

- Replace heated oxygen sensor G39.

24-36

Oxygen sensor heating, checking

Special tools, testers and auxiliary items

- VAG 1598/18 test box
- Multimeter (Fluke 83 or equivalent)
- VW 1594 connector test kit
- Wiring diagram

Test conditions

- HO2S relay OK
- Engine coolant temperature at least 80 °C (176 °F)

Test sequence

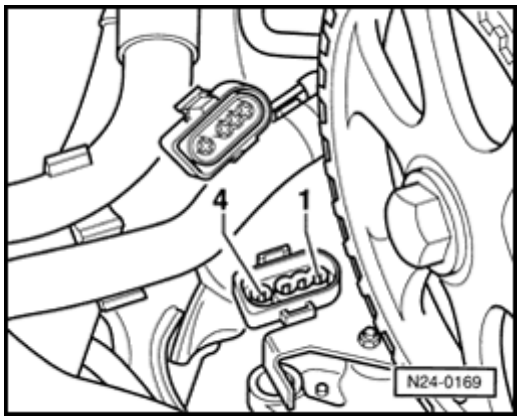

- Separate 4-pin HO2S harness connector.
- Check resistance of heating circuit at HO2S connector terminals 1 and 2.

  Specification: max. 22 Ω

If the specification is not attained:

- Replace HO2S G39.

24-37

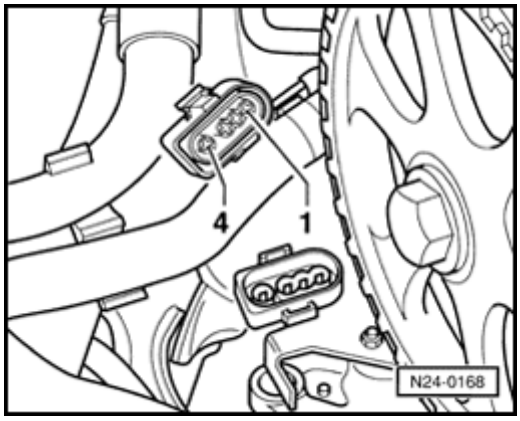

If the specification is attained:

- Start engine and run at idle speed.

- Connect multimeter to measure voltage at HO2S connector terminals 1 and 2.

  Specification: approx. battery positive voltage (B+)

- Switch ignition off.

If no voltage is present:

- Check wiring from HO2S connector terminals 1 and 2 to relay panel according to wiring diagram.

24-38

Engine operating mode, checking

Note:

This check establishes whether the Motronic ECM J220 recognizes the engine operating condition.

Special tools, testers and auxiliary items

- VAG 1551 Scan Tool (ST) or vehicle system tester VAG 1552 with VAG 1551/3 adapter cable

Test conditions

- Engine oil temperature min. 80 °C (176 °F)

Test sequence

- Connect VAG 1551 scan tool ((VAG 1552) and insert "Engine Electronics" address word 01. Carry out selection at idle ⇒ page 01-4 .

Rapid data transfer **HELP**
Select function XX

Indicated on display

- Press buttons -0- and -8- to select "Read Measuring Value Block" function 08.
- Press -Q- button to confirm input.

Read measuring value block **HELP**
Input display group number XXX

Indicated on display

- Press -0-, -0- and -4- to input display group number 004.
- Press -Q- button to confirm input.

24-39

Read measuring value block 4 →

1 2 3 4

Indicated on display (1, 2, 3 and 4 = Display fields)

Note:

If something different is indicated on the display:

⇒ *Scan tool operating instructions*

Display for operating modes:

Overrun mode:

- Increase engine speed to above 3000 RPM.
- Close throttle abruptly.

As long as engine speed is above 1500 RPM:

- 5th position from left must display 1; Display: 00001

Note:

Below 1500 RPM, idle speed will be recognized.

Idle (closed throttle position):

- 4th position from left must display 1; Display: 00010

Part throttle:

- Rev up evenly.
- 3rd position from left must display 1; Display: 00100

Wide open throttle:

- Floor accelerator pedal and release.

  - 2nd position from left must briefly display 1; Display: 01000

Acceleration enrichment:

- Floor accelerator (rev-up to above 3000 RPM).

  - 1st position from left must display 1; Display: 10000

- Press → button.

- Press buttons -0- and -6- to select "End Output" function 06.

- Press -Q- button to confirm input.

If the specifications are not attained:

- Check and erase DTC memory, and eliminate malfunctions if necessary ⇒ page 01-9 .

- Check accelerator pedal mechanism for ease of operation.

- Check throttle position sensor ⇒ page 24-46 .

24-41

Mass Air Flow (MAF) sensor, checking

Special tools, testers and auxiliary items

- VAG 1551 Scan Tool (ST) or vehicle system tester VAG 1552 with VAG 1551/3 adapter cable
- VAG 1598/18 test box
- Multimeter (Fluke 83 or equivalent)
- VW 1594 connector test kit
- Wiring diagram

Test conditions

- Electrical consumers switched off (radiator coolant fan must not run during the check)
- Air conditioner switched off

Test sequence

- Start engine and run at idle speed.
- Connect VAG 1551 scan tool ((VAG 1552) and insert "Engine Electronics" address word 01. Carry out selection at idle ⇒ page 01-4

Rapid data transfer **Select function XX**	**HELP**	≺	Indicated on display

24-42

- Press buttons -0- and -8- to select "Read Measuring Value Block" function 08.

- Press -Q- button to confirm input.

Read measuring value block HELP

Input display group number XXX

Indicated on display

- Press -0-, -0- and -1- to input display group number 001.
- Press -Q- button to confirm input.

Read measuring value block 1 →

1 2 3 4

Indicated on display (1, 2, 3 and 4 = Display fields)

Note:

If something different is indicated on the display:

⇒ *Scan tool operating instructions*

CAUTION!

Do not continue with the check until engine coolant temperature exceeds 80 ° C (display field 2).

- Press -C- button.
- Press -0-, -0- and -3- to input display group number 003.
- Press -Q- button to confirm input.

Read measuring value block 3 →

1 2 3 4

Indicated on display (1, 2, 3 and 4 = Display fields)

- Check engine load signal in display field 2.

  Specification: 0-5%

24-43

If the specification is not attained or the value remains constant when revving-up:

- Continue check according to following table.

Display	Cause	Continuation of check
0%	Open circuit in wire 4	Check wiring ⇒ page 24-44
	Short circuit to ground in wire 4	
	Open circuit in wire 3	Check battery positive voltage (B+) supply ⇒ Page 24-44
4%	Short circuit to positive in wire 4	Check wiring ⇒ page 24-44
37-38%	Open circuit in wire 1	Check battery positive voltage (B+) supply ⇒ Page 24-44

24-44

Checking voltage supply

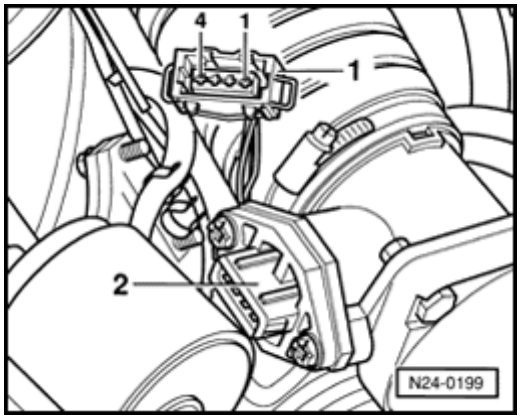

- Separate 4-pin connector to MAF sensor.
- Connect multimeter to measure voltage at connector terminals 1 and 3.
- Switch ignition on.

  Specification: Min. 9 volts
- Switch ignition off.
- Reconnect MAF sensor harness connector.

If no voltage is present:

- Check wiring according to wiring diagram.

Checking wiring

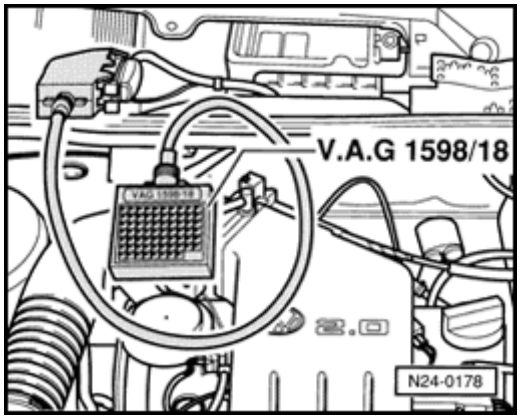

- Connect VAG 1598/18 test box to ECM wiring harness.

24-45

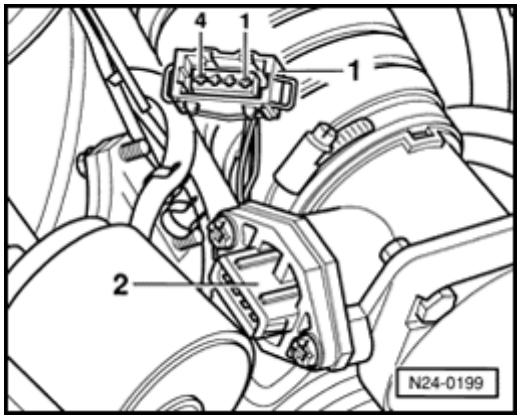

- Check wiring for open circuits between test box and 4-pin connector, according to wiring diagram.
  - Terminal 2 and test box socket 16
  - Terminal 4 and test box socket 17
  - Wire resistance: Max. 1.5 Ω
- Check wires at 4-pin connector for shorts to one another.
  - Terminal 2 and test box socket 17
  - Specification: ∞ Ω (no continuity)
- Check wiring at 4-pin connector terminals 2 and 4 for short circuit to battery positive voltage (B+) according to wiring diagram.

If no wiring malfunction is detected:

- Replace MAF sensor G70.

24-46

Throttle Position (TP) sensor, checking

Special tools, testers and auxiliary items

- VAG 1551 Scan Tool (ST) or vehicle system tester VAG 1552 with VAG 1551/3 adapter cable
- VAG 1598/18 test box
- Multimeter (Fluke 83 or equivalent)
- VW 1594 connector test kit
- Wiring diagram

Functional check

- Connect VAG 1551 scan tool ((VAG 1552) and insert "Engine Electronics" address word 01. Carry out selection with ignition switched on. ⇒ page 01-4

Rapid data transfer **Select function XX**	**HELP**	≺	Indicated on display - Press buttons -0- and -8- to select "Read Measuring Value Block" function 08. - Press -Q- button to confirm input.
Read measuring value block **Input display group number XXX**	**HELP**	≺	Indicated on display - Press -0-, -0- and -3- to input display group number 003. - Press -Q- button to confirm input.

24-47

Read measuring value block 3 →

1 2 3 4

Indicated on display (1, 2, 3 and 4 = Display fields)

Note:

If something different is indicated on the display:

⇒ *Scan tool operating instructions*

- Check throttle valve angle at closed throttle position in display field 3.

  Specification: 5-19 ∠°

- Slowly open throttle valve fully and observe angle displayed in display field 3.

  - Value must increase uniformly over the complete range

- Check throttle valve angle at wide open throttle position in display field 3.

  Specification: 85-101 ∠°

- Press → button.
- Press buttons -0- and -6- to select "End Output" function 06.
- Press -Q- button to confirm input.
- Switch ignition off.

Note:

The displayed value is dependent on the tolerances of the throttle position sensor and does not correspond to the actual opening angle.

24-48

If the value does not increase uniformly:

- Replace throttle position sensor.

If the value remains constant:

- Continue check according to following table.

Display	Cause	Continuation of check
106 ∠ °	Open circuit in wire 2	Check wiring ⇒ page 24-50
	Short circuit to positive in wire 2	
	Open circuit in wire 3	Check battery positive voltage (B+) supply ⇒ page 24-49
0 ∠ °	Open circuit in wire 1	
	Short circuit to ground in wire 2	Check wiring ⇒ page 24-50

24-49

Checking voltage supply

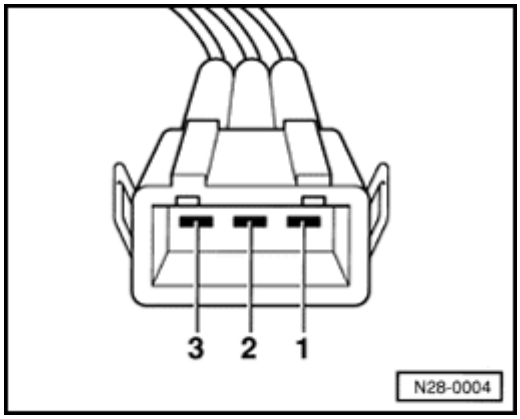

- Separate 3-pin connector from throttle position sensor.
- Connect multimeter to measure voltage at connector terminals 1 and 3.
- Switch ignition on.

  Specification: min. 4.5 V
- Switch ignition off.

If the specification is not attained:

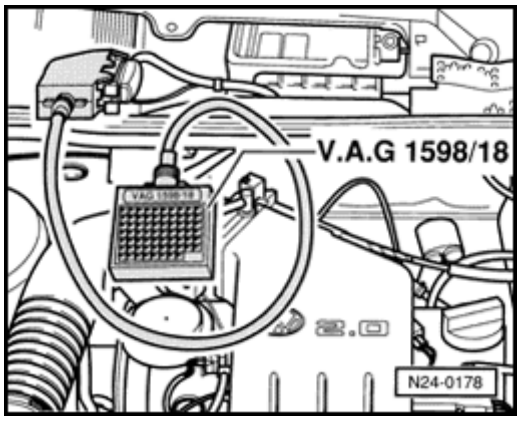

- Connect VAG 1598/18 test box to ECM wiring harness.

24-50

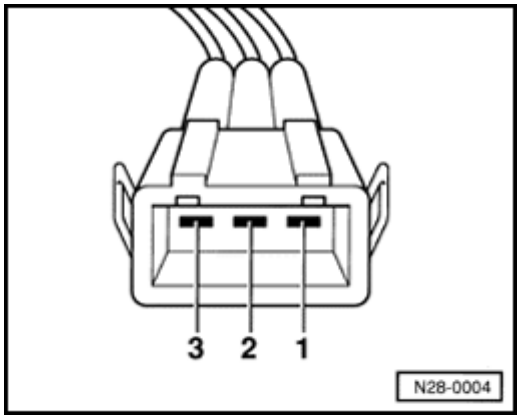

- Check wiring for open circuits between test box and 3-pin connector, according to wiring diagram.
  - Terminal 1 and test box socket 41
  - Terminal 3 and test box socket 33
  - Wire resistance: Max. 1.5 Ω
- Check wires at 3-pin connector for shorts to one another.
  - Terminal 1 and test box socket 33
  - Specification: ∞ Ω (no continuity)

If no wiring malfunction is detected:

- Replace Motronic ECM J220 ⇒ page 24-9 , item 16 .

Checking wiring

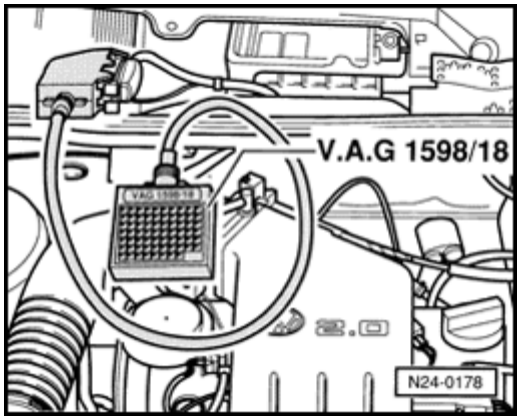

- Connect VAG 1598/18 test box to ECM wiring harness.

If the display shows constant 0 ∠ °:

- Check wire for short circuit to ground.
  - test box sockets 1 and 40
  - Specification: ∞ Ω (no continuity)

24-51

If the display shows constant 106 ∠°:

- Switch ignition on.
- Check wire for short circuit to positive.
  - Connect multimeter to measure voltage at box sockets 1 and 40
    - ♦ Specification: 0 volts
- Switch ignition off

Continuation if voltage is present:

If voltage of about 5 volts was present:

- Separate 3-pin connector to throttle position sensor.
- Switch ignition on.

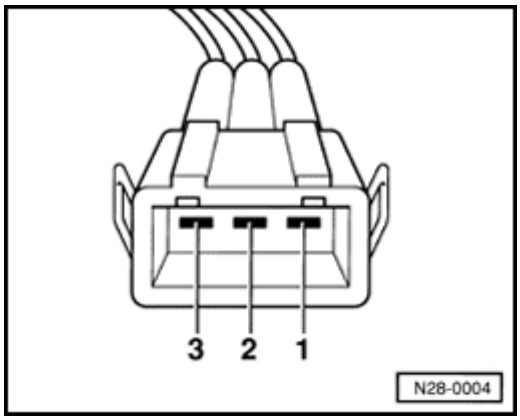

- Check wiring at 3-pin connector terminals 1 a 2 for short circuit to one another according to wiring diagram.

  Specification: ∞ Ω

If the voltage was approx. battery positive volta (B+):

- Check wire at 3-pin connector terminal 1 for short circuit to B+ according to wiring diagra

24-52

Continuation if no voltage is present:

- Separate 3-pin connector to throttle position sensor.

- Check wiring for open circuits between test box and 3-pin connector, according to wiring diagram.

  - Terminal 2 and test box socket 40

  - Wire resistance: Max. 1.5 Ω

If no wiring malfunction is detected:

- Replace throttle position sensor.

24-53

Transmission Control Module (TCM) and Throttle Position (TP) sensor, matching

Note:

On automatic transmission vehicles, the TCM J217 and the TP sensor G69 must be matched to one another after the following work has been completed:

- *Replacement of TCM*
- *Removal and installation of throttle position sensor*
- *Replacement of throttle valve housing (throttle body)*

Special tools, testers and auxiliary items

- VAG 1551 Scan Tool (ST) with VAG 1551/3 adapter cable

Matching

- Use VAG 1551 scan tool to bring system to basic setting (function 04).

⇒ *Repair Manual, Automatic Transmission 096, Repair Group 01*

24-54

Engine Coolant Temperature (ECT) sensor, checking

Special tools, testers and auxiliary items

- VAG 1551 Scan Tool (ST) or vehicle system tester VAG 1552 with VAG 1551/3 adapter cable
- VAG 1598/18 test box
- Multimeter (Fluke 83 or equivalent)
- VW 1594 connector test kit
- Wiring diagram

Test conditions

- Engine cold

Test sequence

- Start engine and run at idle speed.
- Connect VAG 1551 scan tool ((VAG 1552) and insert "Engine Electronics" address word 01. Carry out selection at idle. ⇒ page 01-4 .

Rapid data transfer **Select function XX**	**HELP**	<	Indicated on display

- Press buttons -0- and -8- to select "Read Measuring Value Block" function 08.
- Press -Q- button to confirm input.

Indicated on display

24-55

Read measuring value block HELP **Input display group number XXX**	⮜	- Press -0-, -0- and -1- to input display group number 001. - Press -Q- button to confirm input.
Read measuring value block 1 → **1 2 3 4**	⮜	Indicated on display (1, 2, 3 and 4 = Display fields) ***Note:*** *If something different is indicated on the display:* ⇒ *Scan tool operating instructions*

Functional check of sensor

Display	Cause	Continuation of check
77.7 ° C	Open circuit or short to positive	⇒ page 24-57
	Short to ground	
Temperature value increases uniformly1)	OK	

1) If the temperature that is displayed deviates greatly from the ambient temperature of the sensor, check sensor wiring for transfer resistance.

Note:

- *Depending upon the temperature level, the display on VAG 1551 scan tool will jump by 2-5 ° C.*
- *If irregular engine running occurs in certain temperature ranges and the temperature value does not increase without interruption, the temperature signal is temporarily interrupted and the sensor must be replaced.*

- Press → button.
- Press buttons -0- and -6- to select "End Output" function 06.
- Press -Q- button to confirm input.
- Switch ignition off

24-57

Continuation of check when display = 77.7 ° C

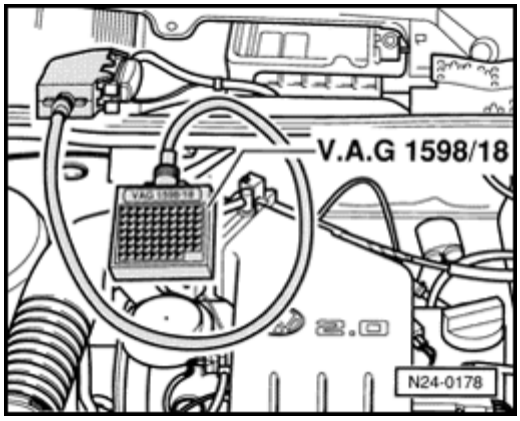

- Connect VAG 1598/18 test box to ECM wiring harness.

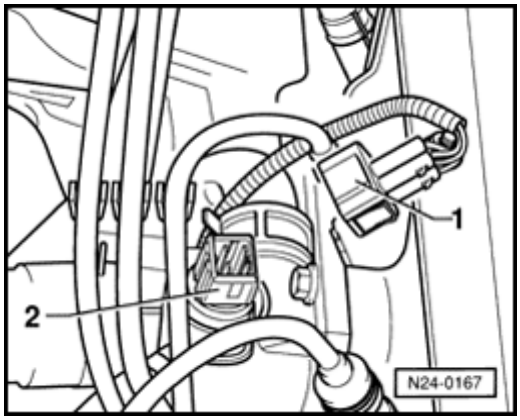

- Disconnect 4-pin harness connector -1- from engine coolant temperature sensor G62 -2-.

24-58

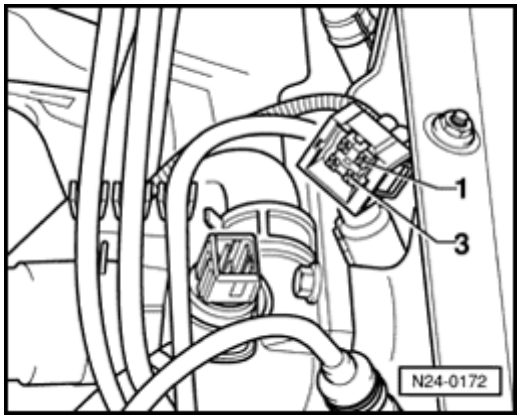

- Check wiring for open circuits between test box and 4-pin connector, according to wiring diagram.
  - Terminal 1 and test box socket 14
  - Terminal 3 and test box socket 33
  - Wire resistance: Max. 1.5 Ω
- Check wiring between ECM connector and 4-pin connector terminal 3 for short circuit to terminal 1 and/or chassis ground, according to wiring diagram.

  Specification: ∞ Ω (no continuity)
- Additionally check wires for short to battery positive (B+).

  Specification: ∞ Ω (no continuity)

If no wiring malfunction is detected:

- Measure resistance at engine coolant temperature sensor G62 terminals 1 and 3.

Resistance specifications ⇒ page 24-18 , ⇒ Fig. 1

If the specification is not attained:

- Replace engine coolant temperature sensor G62.

24-59

Intake Air Temperature (IAT) sensor, checking

Special tools, testers and auxiliary items

- VAG 1551 Scan Tool (ST) or vehicle system tester VAG 1552 with VAG 1551/3 adapter cable
- VAG 1598/18 test box
- Multimeter (Fluke 83 or equivalent)
- VW 1594 connector test kit
- Wiring diagram
- Chilling spray (commercially available)

Test sequence

- Connect VAG 1551 scan tool ((VAG 1552) and insert "Engine Electronics" address word 01. Carry out selection with ignition switched on. ⇒ page 01-4

Rapid data transfer **Select function XX**	**HELP**	≺	Indicated on display - Press buttons -0- and -8- to select "Read Measuring Value Block" function 08. - Press -Q- button to confirm input.
Read measuring value block **Input display group number XXX**	**HELP**	≺	Indicated on display

24-60

- Press -0-, -0- and -3- to input display group number 003.

- Press -Q- button to confirm input.

Reading measured value block 3 →

1 2 3 4

Indicated on display (1, 2, 3 and 4 = Display fields)

Note:

If something different is indicated on the display:

⇒ *Scan tool operating instructions*

Functional check

- Read intake air temperature value in display field 4.

Display	Cause	Continuation of check
19.6 °C	Open circuit or short to positive	⇒ page 24-61
	Short to ground	
Approx. ambient temperature1)	---	⇒ page 24-63

1) If the temperature that is displayed deviates greatly from the ambient temperature of the sensor, check sensor wiring for transfer resistance.

24-61

Continuation of check when display = 19.6 ° C

- Switch ignition off.

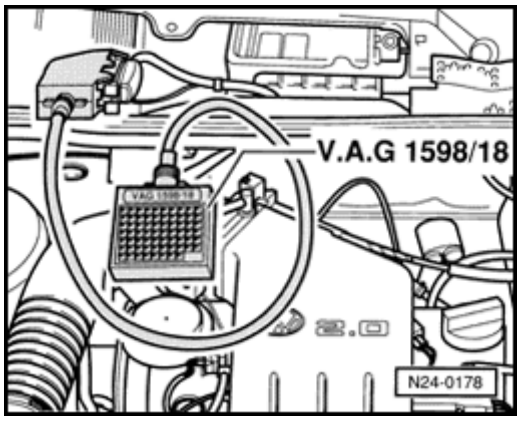

- Connect VAG 1598/18 test box to ECM wiring harness.

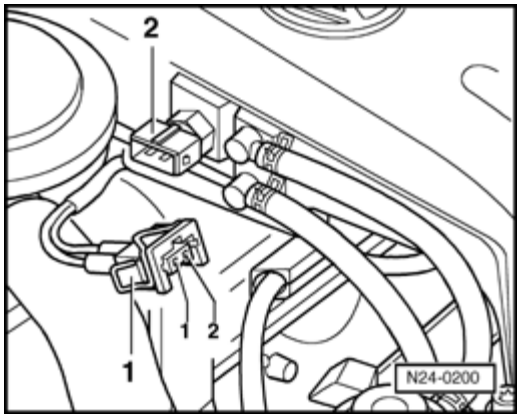

- Disconnect 2-pin harness connector -1- from intake air temperature sensor G72 -2-.

24-62

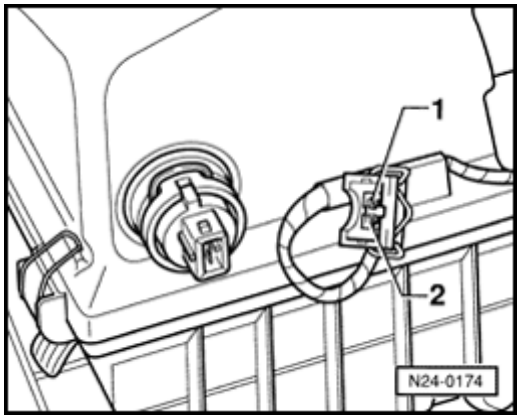

- Check wiring for open circuits between test box and 2-pin connector, according to wiring diagram.
  - Terminal 1 and test box socket 36
  - Terminal 2 and test box socket 33
  - Wire resistance: Max. 1.5 Ω
- Check wiring between ECM connector and 2-pin connector terminal 2 for short circuit to terminal 1 and/or chassis ground, according to wiring diagram.
  - Terminal 2 and test box socket 36
  - Specification: ∞ Ω (no continuity)
- Additionally check wiring for short to battery positive (B+).
  - Specification: ∞ Ω (no continuity)

If no wiring malfunction is detected:

- Measure resistance on intake air temperature sensor G72 terminals 1 and 2.

Resistance specifications ⇒ page 24-18 , ⇒ Fig. 1

If the specification is not attained:

- Replace intake air temperature sensor G72.

24-63

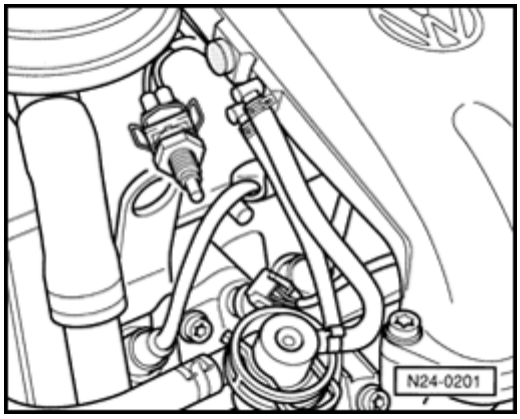

Continuation of check when display = ambient temperature

- Remove intake air temperature sensor G72 (harness connector remains connected).
- Note intake air temperature value in display field 4.
- Spray sensor with chilling spray (commercially available) while observing temperature display.
  - Temperature value must decrease.
- Press → button.
- Press buttons -0- and -6- to select "End Output" function 06.
- Press -Q- button to confirm input.

24-64

Engine Speed (RPM) sensor, checking

Special tools, testers and auxiliary items

- VAG 1598/18 test box
- Multimeter (Fluke 83 or equivalent)
- VW 1594 connector test kit
- Wiring diagram

Test sequence

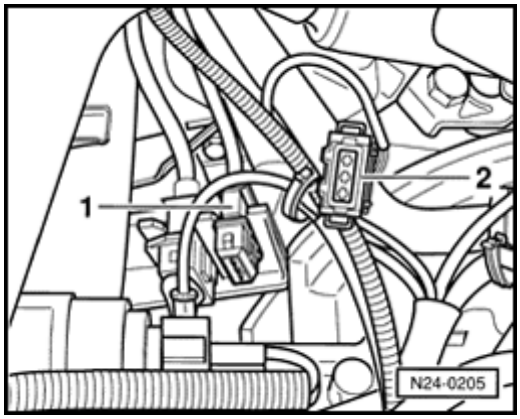

- Disconnect 3-pin harness connector from sensor -1-.

24-65

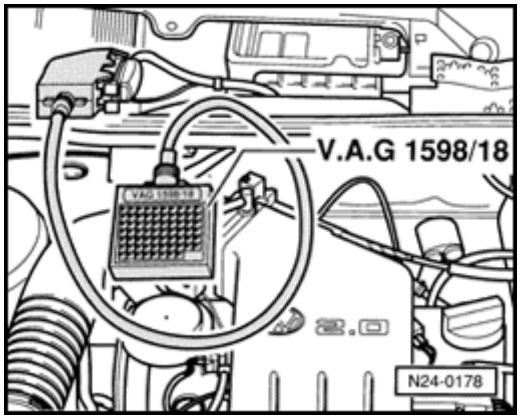

- Connect VAG 1598/18 test box to ECM wiring harness.

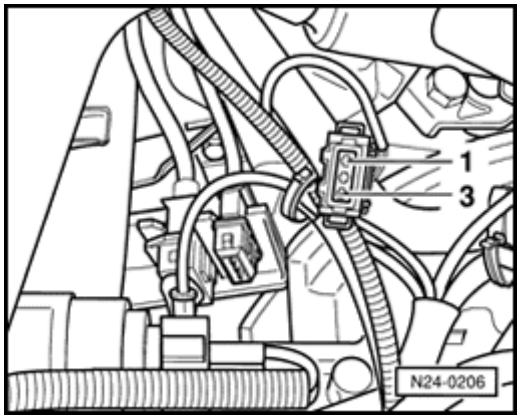

- Check wiring for open circuits between test box and 3-pin connector -1-, according to wiring diagram.
  - Terminal 1 and test box socket 67
  - Terminal 2 and test box socket 68
  - Terminal 3 and test box socket 56
  - Wire resistance: Max. 1.5 Ω

- Additionally check wires for short to one another.
  - Terminal 1 and test box socket 68
  - Terminal 1 and test box socket 56
  - Terminal 2 and test box socket 56
  - Specification: ∞ Ω (no continuity)

If no wiring malfunction is detected:

- Replace engine speed sensor G28.

24-67

Vehicle speed signal, checking

Special tools, testers and auxiliary items

- VAG 1551 Scan Tool (ST) or vehicle system tester VAG 1552 with VAG 1551/3 adapter cable
- Multimeter (Fluke 83 or equivalent)
- VW 1594 connector test kit
- Wiring diagram

Test conditions

- Speedometer OK

⇒ *Repair Manual, Electrical Equipment, Repair Group 90*

WARNING!

The vehicle speed signal must be checked while driving the vehicle. To do this safely, a second person is required.

Test sequence

- Connect VAG 1551 scan tool ((VAG 1552) and insert "Engine Electronics" address word 01. Carry out selection at idle. ⇒ page 01-4 .

Rapid data transfer **HELP** Indicated on display

Select function XX

- Press buttons -0- and -8- to select "Read Measuring Value Block" function 08.

24-68

- Press -Q- button to confirm input.

Read measuring value block HELP

Input display group number XXX

Indicated on display

- Press -0-, -0- and -4- to input display group number 004.
- Press -Q- button to confirm input.

Read measuring value block 4 →

1 2 3 4

Indicated on display (1, 2, 3 and 4 = Display fields)

Notes:

- *If something different is indicated on display:*

⇒ *Scan tool operating instructions*

- *If an incorrect input causes "Error in communication link" to be displayed, disconnect cable from VAG 1551 scan tool, then reconnect and repeat work steps.*

- Carry out test drive and, with 2nd person, observe display in display field 3.

  Specification: approx. vehicle road speed

- Press → button.
- Press buttons -0- and -6- to select "End Output" function 06.
- Press -Q- button to confirm input.

24-69

If no speed is indicated:

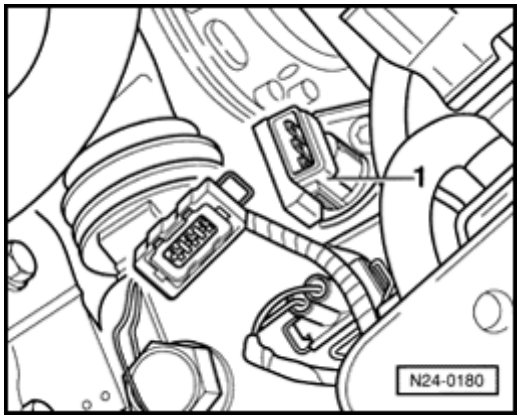

- Disconnect 3-pin harness connector from sensor -1-.
- Switch ignition on.

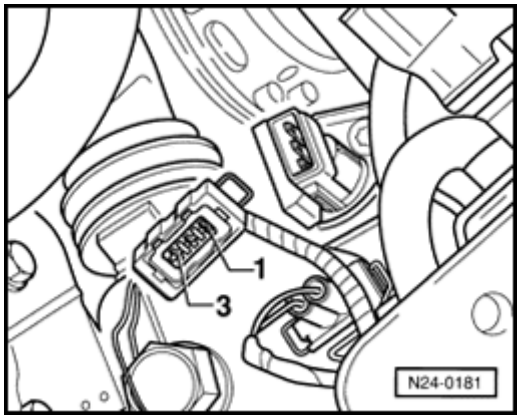

- Check voltage between connector terminals 1 and 3.

  Specification: Min. 9 volts
- Switch ignition off.
- Reconnect harness connector.

If no voltage was present:

- Check wiring according to wiring diagram.

24-70

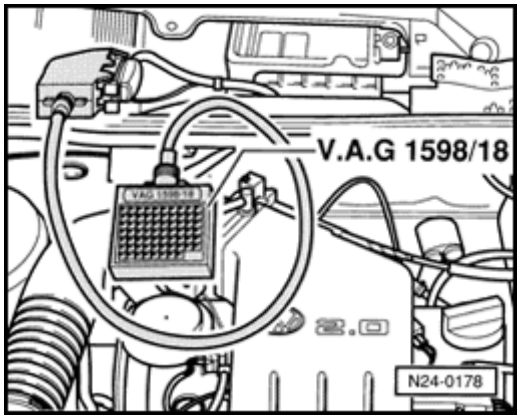

If voltage was min. 9 volts:

- Connect VAG 1598/18 test box to ECM wiring harness.
- Check wire for open circuit between single connector (behind central electrics) and test box socket 65, according to wiring diagram.

  Wire resistance: Max. 1.5 Ω
- Connect multimeter to measure voltage at test box sockets 56 and 65.
- Switch ignition on.
- Raise and rotate left front wheel, or push vehicle.
  - Voltage must fluctuate between 0 volts and at least 4 volts

If no wiring malfunction is detected and voltage was present between terminals 1 and 3 (⇒ Page 24-69):

- Replace speedometer vehicle speed sensor G22.

24-71

Engine Control Module (ECM) voltage supply, checking

Special tools, testers and auxiliary items

- VAG 1551 Scan Tool (ST) or vehicle system tester VAG 1552 with VAG 1551/3 adapter cable
- VAG 1598/18 test box
- Multimeter (Fluke 83 or equivalent)
- VW 1594 connector test kit
- Wiring diagram

Check conditions

- Battery positive voltage (B+) at least 11 volts
- Generator OK

Checking voltage supply via power supply relay J363

- Connect VAG 1551 scan tool ((VAG 1552) and insert "Engine Electronics" address word 01. Carry out selection at idle. ⇒ page 01-4

Rapid data transfer **Select function XX**	**HELP**	<	Indicated on display

- Press buttons -0- and -8- to select "Read Measuring Value Block" function 08.

24-72

- Press -Q- button to confirm input.

Read measuring value block HELP

Input display group number XXX

Indicated on display

- Press -0-, -0- and -2- to input display group number 002.
- Press -Q- button to confirm input.

Read measuring value block 2 →

1 2 3 4

Indicated on display (1, 2, 3 and 4 = Display fields)

Note:

If something different is indicated on the display:

⇒ *Scan tool operating instructions*

- Read value displayed in display field 3.

  Specification: approx. battery positive voltage (B+) constant
- Press → button.
- Press buttons -0- and -6- to select "End Output" function 06.
- Press -Q- button to confirm input.

24-73

If the displayed value fluctuates or the battery voltage is not attained:

- Switch ignition off.

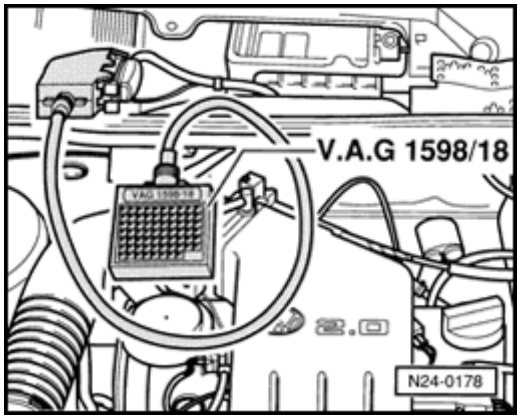

- Connect VAG 1598/18 test box to ECM wiring harness.
- Switch ignition on.
- Bridge sockets 1 and 9 with adapter cables from VW 1594 connector test kit.
- Check voltage with multimeter between test box sockets 1 and 23 using adapter cables from VW 1594 test kit.

  Specification: Min. 9 volts

If the specifications are not attained:

- Replace power supply relay J363.

Checking battery positive voltage (B+) supply (terminal 30)

- Check voltage with multimeter between test box sockets 1 and 54 using adapter cables from VW 1594 test kit.

  Specification: Min. 9 volts

If the specification is not attained:

- Check wiring according to wiring diagram.

24-74

Checking voltage supply terminal 15

- Check voltage with multimeter between test box sockets 1 and 38 using adapter cables from VW 1594 test kit.

  Specification: Min. 9 volts

If the specification is not attained:

- Check wiring according to wiring diagram.

24-75

Air conditioning compressor signal, checking

Special tools, testers and auxiliary items

- VAG 1551 Scan Tool (ST) or vehicle system tester VAG 1552 with VAG 1551/3 adapter cable
- VAG 1598/18 test box
- Multimeter (Fluke 83 or equivalent)
- VW 1594 connector test kit
- Wiring diagram

Check conditions

- Air conditioning OK
- Air conditioning switched off
- Vehicle interior ambient temperature above 15 ° C (59 ° F)
- No malfunctions stored in Diagnostic Trouble Code (DTC) memory ⇒ page 01-9

Test sequence

- Connect VAG 1551 scan tool ((VAG 1552) and insert "Engine Electronics" address word 01. Carry out selection at idle. ⇒ page 01-4

Rapid data transfer	**HELP**	≺	Indicated on display
Select function XX			

24-76

- Press buttons -0- and -8- to select "Read Measuring Value Block" function 08.

- Press -Q- button to confirm input.

Read measuring value block HELP

Input display group number XXX

Indicated on display

- Press -0-, -0- and -5- to input display group number 005.
- Press -Q- button to confirm input.

Read measuring value block 5 →

1 2 3 4

Indicated on display (1, 2, 3 and 4 = Display fie

- Observe 5-digit block in display field 4.
  - 1st and 2nd positions from left must display zero

  Display __00
- Switch on air conditioner (lowest temperatur and highest blower speed).
  - 1st and 2nd positions from left must now display 1

  Display __00

If the display is not as described:

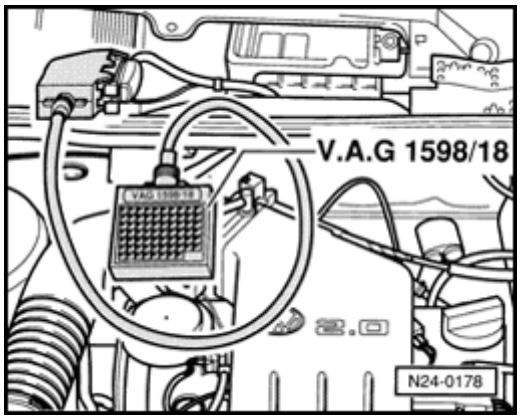

- Connect VAG 1598/18 test box to ECM wirir harness.
- Check wiring for open circuit between test bo sockets 37/39 and air conditioner, according wiring diagram.

  Wire resistance: Max. 1.5 Ω

24-77

Fuel injectors, checking

Special tools, testers and auxiliary items

- VAG 1598/18 test box
- Multimeter (Fluke 83 or equivalent)
- VAG 1527B voltage tester
- VW 1594 connector test kit
- Wiring diagram

Check conditions

- Engine speed sender OK.
- Fuel pump relay OK

Checking activation

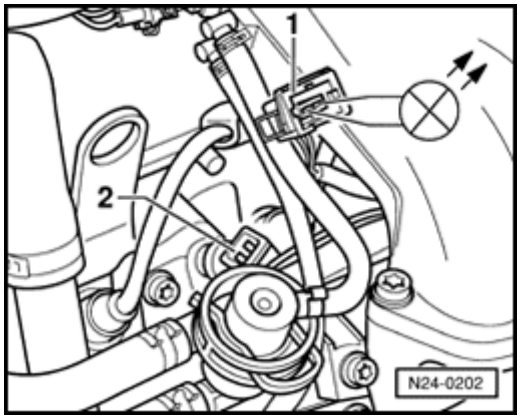

- Disconnect harness connector -1- from connector -2- and connect VAG 1527B voltage tester to connector -1- using adapter cables from VW 1594 test kit.
- Operate starter and check fuel injector voltage supply.
  - LED must flicker
- Repeat check on fuel injectors 2, 3 and 4.

24-78

If LED does not flicker:

- Switch ignition off.

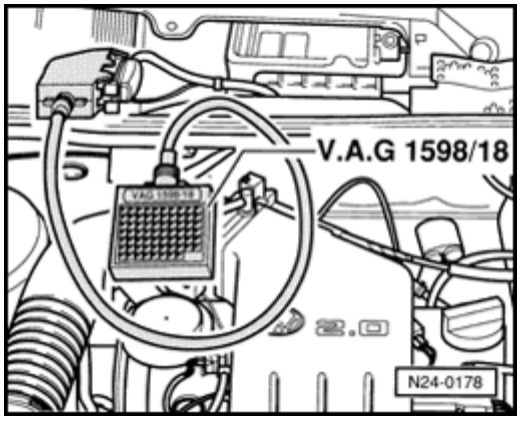

- Connect VAG 1598/18 test box to ECM wiring harness.

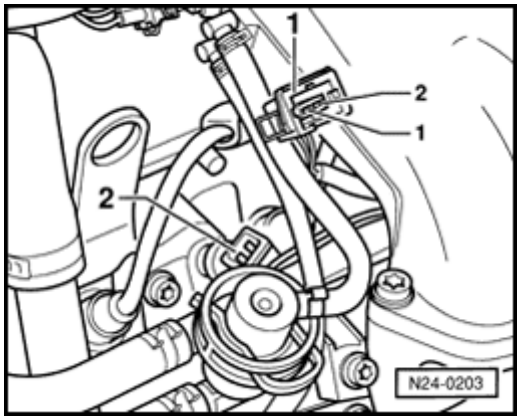

- Check wiring for open circuits between test box and connector, according to wiring diagram.
  - Cyl. 1 fuel injector: terminal 2 and test box socket 24
  - Cyl. 2 fuel injector: terminal 2 and test box socket 2
  - Cyl. 3 fuel injector: terminal 2 and test box socket 25
  - Cyl. 4 fuel injector: terminal 2 and test box socket 26
  - Wire resistance: Max.1.5 Ω

24-79

- Check wiring for open circuit between fuel injector connector terminal 1 and relay panel according to wiring diagram.

  Wire resistance: Max. 1.5 Ω

- Additionally check wires for short to one another.

  Specification: ∞ Ω (no continuity)

Checking fuel injector resistance

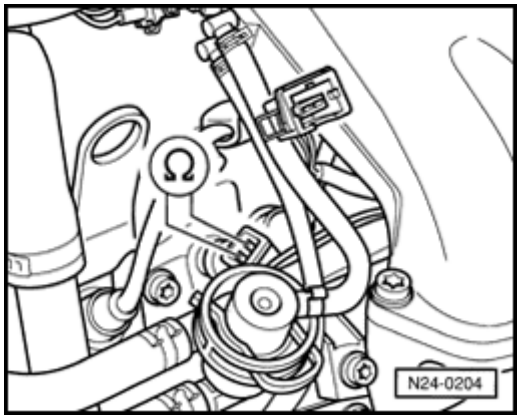

- Check resistance of fuel injectors individually

  Specification: 15...20 Ω

If the specification is not attained, replace fuel injector(s) as necessary.

Fuel injector spray pattern and leakage checking

WARNING!

The fuel system is pressurized! Before loosening hose connections or opening the test connection, wrap a cloth around the connection. Then release pressure by carefully loosening and disconnecting the hose or fitting.

Special tools, testers and auxiliary items

- VW 1594 connector test kit
- VAG 1630 digital potentiometer
- VAG 1602 measuring unit

Test sequence

- Remove toothed belt guard, upper part.
- Remove fuel rail complete with fuel injectors page 24-15 .
- Hold fuel injectors in VAG 1602 measuring u

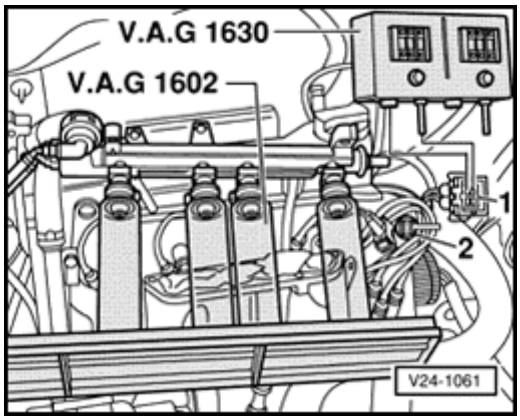

24-81

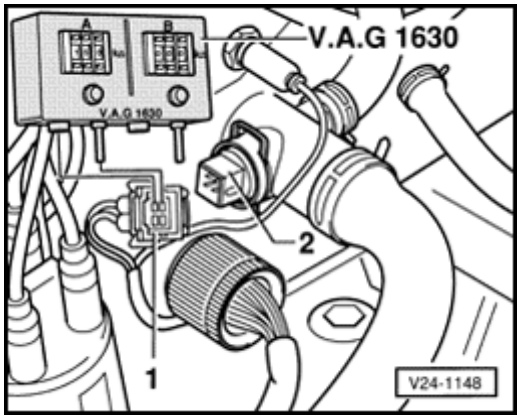

- Disconnect harness connector from engine coolant temperature sensor G62.
- Set VAG 1630 digital potentiometer scale A to 15k Ω and connect to connector terminals 1 and 3 using adapter cables from VW 1594 test kit.
- Disconnect harness connector from ignition coil.
- Operate starter (2nd person required).
  - Fuel injectors must pulsate and discharge fuel in accordance with cylinder firing order.
- Switch ignition off and check injectors for leaks.

  Specification: No more than 2 drops/min. may leak from each fuel injector.

Note:

When installing the fuel injectors, make sure that the O-rings are not damaged.

24-82

Fuel pressure regulator and residual pressure, checking

The fuel pressure regulator controls the fuel pressure dependent upon intake manifold pressure.

Special tools, testers and auxiliary items

- VAG 1318 pressure gauge
- VAG 1318/10 adapter
- VAG 1318/11 adapter
- VAG 1318/16 adapter

Test conditions

- Fuel pump delivery rate OK.

⇒ *Repair Manual, 2.0 Liter General, Engine, Repair Group 20*

WARNING!

The fuel system is pressurized! Before loosening hose connections or opening the test connection, wrap a cloth around the connection. Then release pressure by carefully loosening and disconnecting the hose or fitting.

24-83

Test sequence

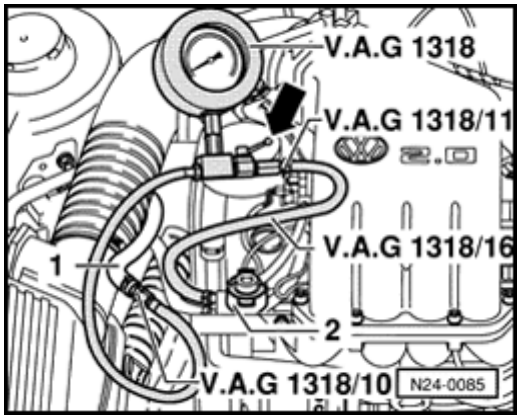

- Disconnect fuel supply hose -1- from fuel rail -2- and connect to VAG 1318 pressure gauge using VAG 1318/10 adapter.
- Connect VAG 1318 pressure gauge to fuel rail -2- using VAG 1318/11 and VAG 1318/16 adapters.
- Open gauge valve; handle in direction of flow (arrow).
- Start engine and run at idle speed.
- Check fuel pressure.

  Specification: Approx. 2.5 bar (36 psi)

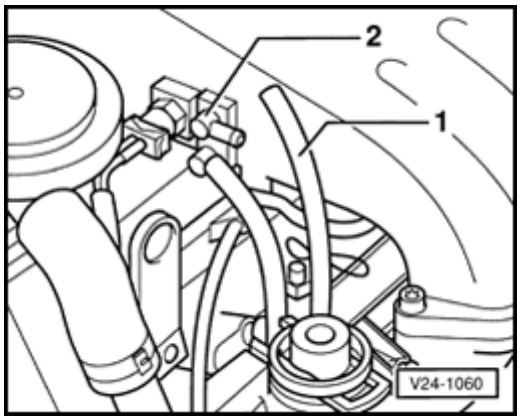

- Disconnect vacuum hose -1- from connection -2-.
  - Fuel pressure must rise to approx. 3.0 bar (44 psi)
- Switch ignition off.
- Check for leaks and residual pressure by watching pressure drop on gauge.
  - After 10 minutes residual pressure must be at least 2 bar (29 psi).

If the residual pressure drops below 2 bar:

- Start engine and run at idle speed.

24-84

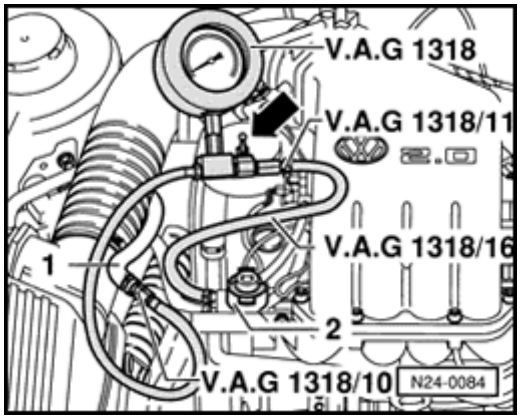

- After pressure has built up switch ignition off and at the same time close gauge valve; handle 90 ° to flow (arrow).
- Watch pressure drop on gauge.

If the pressure drops again:

- Check fuel pump check valve.

⇒ *Repair Manual, 2.0 Liter General, Engine, Repair Group 20*

If the pressure does not drop:

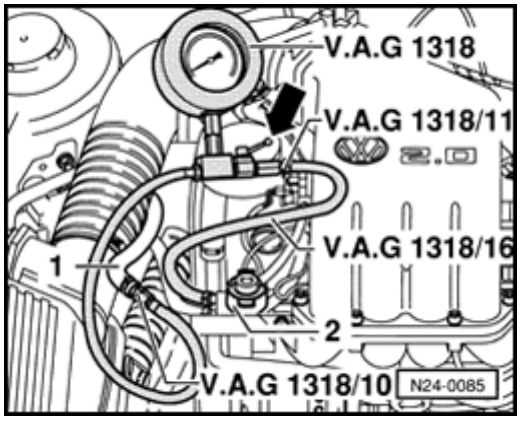

- Open pressure gauge valve (arrow).
- Start engine and run at idle speed.
- After pressure has built up switch ignition off and at the same time clamp-off the return hose at fuel rail (blue arrow).

If the pressure does not drop:

- Replace fuel pressure regulator.

If the pressure continues to drop:

- Check VAG 1318 gauge, connections, fuel rail O-rings and fuel injectors for leaks.

24-85

Intake air system, checking for leaks (outside air)

Special tools, testers and auxiliary items

- VAG 1551 Scan Tool (ST) or vehicle system tester VAG 1552 with VAG 1551/3 adapter cable
- Engine leak detector spray G 001 800 A1

WARNING!

The safety precautions listed on the leak detector spray container must be followed.

Note:

- *The vacuum in the intake system will cause the leak detector spray to be drawn in with outside air.*
- *The leak detector spray reduces the flammability of the mixture. This leads to a drop in engine speed (idle RPM) and to a significant increase in CO content.*

Test sequence

- Start engine and run at idle speed.
- Connect VAG 1551 scan tool ((VAG 1552) and insert "Engine Electronics" address word 01. Carry out selection at idle. ⇒ page 01-4

Rapid data transfer **Select function XX**	**HELP**	≺	Indicated on display

24-86

- Press buttons -0- and -8- to select "Read Measuring Value Block" function 08.

- Press -Q- button to confirm input.

Read measuring value block HELP

Input display group number XXX

Indicated on display

- Press -0-, -0- and -1- to input display group number 001.
- Press -Q- button to confirm input.

Read measuring value block 1 →

1 2 3 4

Indicated on display (1, 2, 3 and 4 = Display fields)

Note:

If something different is indicated on the display:

⇒ *Scan tool operating instructions*

- Read and record oxygen sensor factor in display field 3.
- Systematically spray parts of intake air system with engine leak detector spray.

If the engine speed drops or if oxygen sensor factor in display field 3 changes:

- Check for intake air system leaks in sprayed area and eliminate leak.

24-87

Intake air preheating, checking

Special tools, testers and auxiliary items

- VAG 1390 hand vacuum pump

Checking regulating flap

- Regulating flap vacuum unit must not be leaking

- Remove upper air cleaner housing and remc air cleaner element.

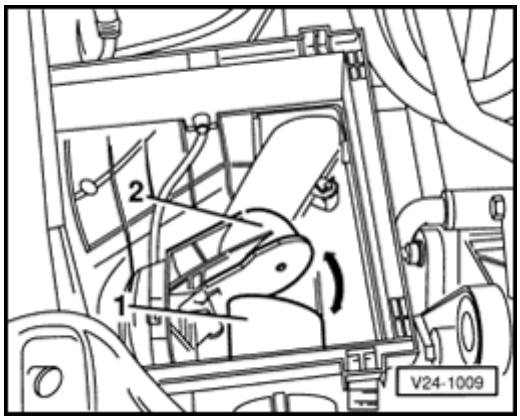

- Position upper air cleaner housing so that regulating flap in the lower air cleaner housir visible.
- Disconnect vacuum line from temperature regulator vacuum unit.
- Connect vacuum line to VAG 1390 hand vacuum pump.
- Operate pump to apply vacuum and check freedom of movement of regulating flap and function of vacuum unit.
  - Regulating flap must close off cold air intak 1-.

24-88

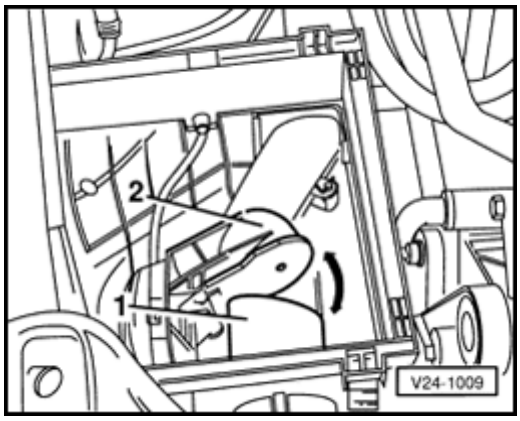

Checking temperature regulator

- Connect vacuum line to temperature regulat
  (brass connecting pipe or with notch).

- Start engine and run at idle speed.

- Check position of regulating flap after max. 2
  seconds.

Temperature of temperature regulator	Regulating flap position
below 20 ° C (68 ° F)	Cold air inlet -1- closed
above 30 ° C (86 ° F)	Warm air inlet -2 closed
Between 20 ° and 30 ° C (68 ° and 86 ° F)	Between cold ar warm air inlet

28-1

Motronic fuel injection and ignition system

Note:

- *Only the components that specifically relate to the ignition system are dealt with in this Repair Group. For the other components of the fuel injection and ignition system ⇒ Repair Group 24.*
- *The fuel injection and ignition system Engine Control Module (ECM) is equipped with On Board Diagnostic (OBD) capability and Diagnostic Trouble Code (DTC) memory.*
- *Components marked with an asterisk (*) are checked by the On Board Diagnostic program.*
- *Check DTC memory before carrying out troubleshooting and repairs ⇒ page 01-9 .*

Safety precautions ⇒ page 24-19

Technical data, spark plugs ⇒ page 28-7

28-2

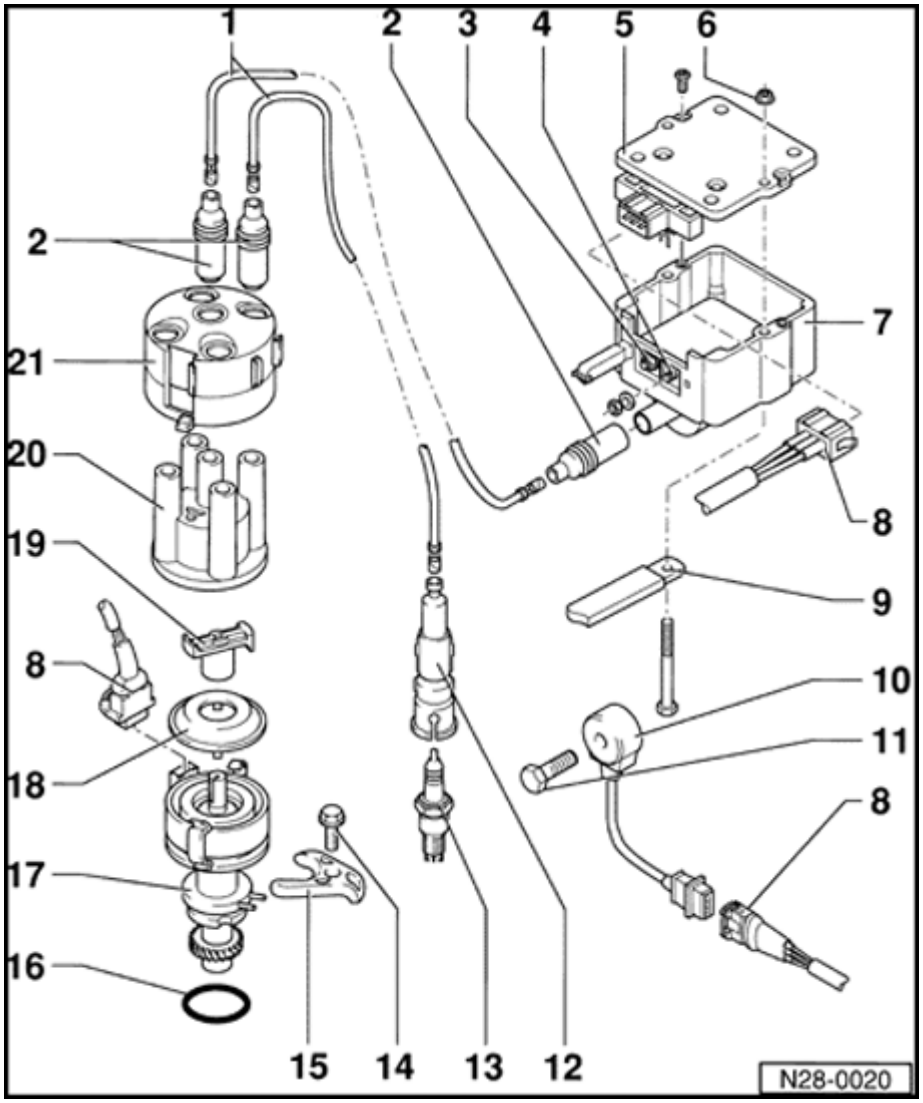

Motronic ignition system, servicing

Note:

Motronic Engine Control Module (ECM) J220 with connector ⇒ page 24-9 , item 16 .*

1 - High-voltage ignition cable

- Ignition secondary circuit
- Check for continuity

2 - Suppressor

- Resistance: 0.6-1.4 kΩ

3 - Ignition coil terminal 1

4 - Ignition coil terminal 15

5 - Ignition coil power output stage - N157-*

- Checking

⇒ page 28-20

6 - 10 Nm (7 ft lb)

7 - Ignition coil -N152-

- Checking ⇒ page 28-19

28-3

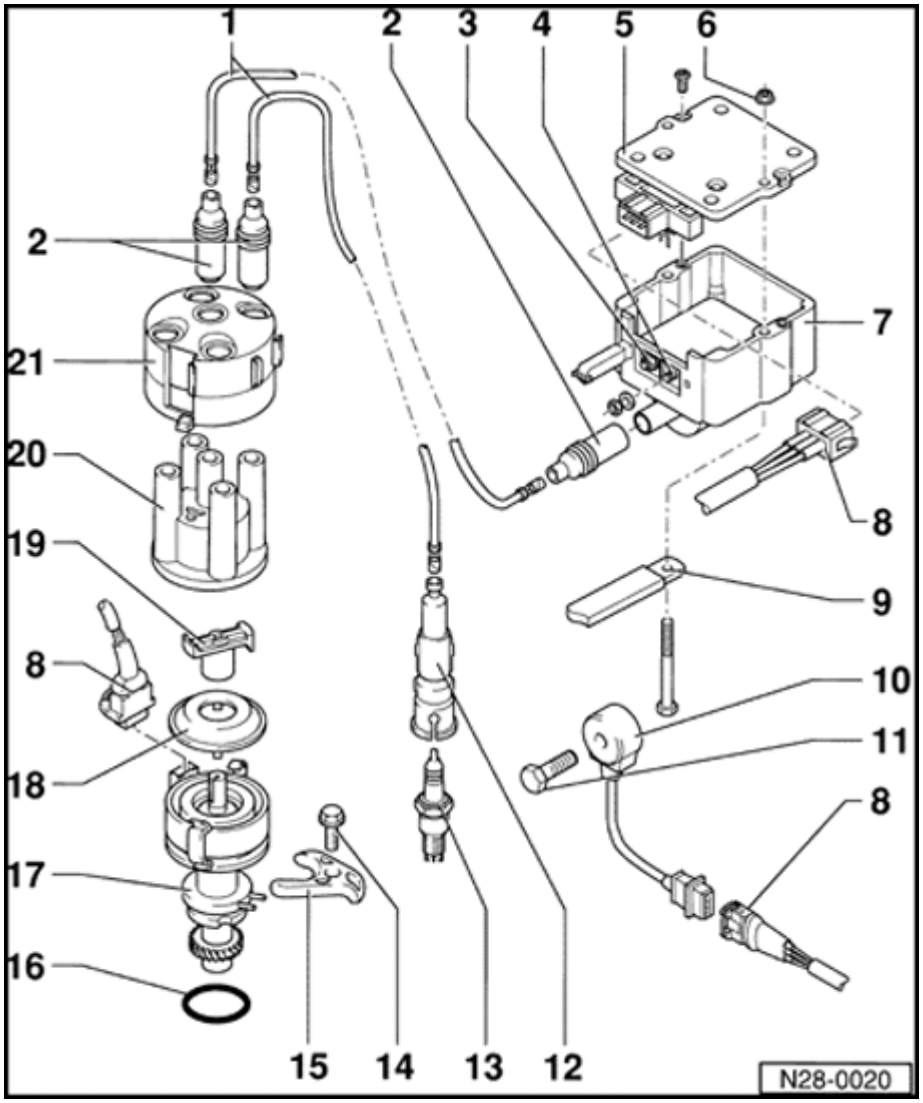

8 - Harness connector

- 3-pin

9 - Ground (GND) strap

10 - Knock Sensor (KS) 1 - G61-*

11 - 20 Nm (15 ft lb)

- Tightening torque influences knock sensor function

12 - Spark plug connector

- Use 3277 when pulling off and pushing on

- Resistance: 4-6 kΩ

13 - Spark plug

- Tightening torque: 30 Nm (22 ft lb)

- Remove and install with 3122B

- Spark plug type and electrode gap ⇒ page 28-7

14 - 25 Nm (18 ft lb)

15 - Clamp

28-4

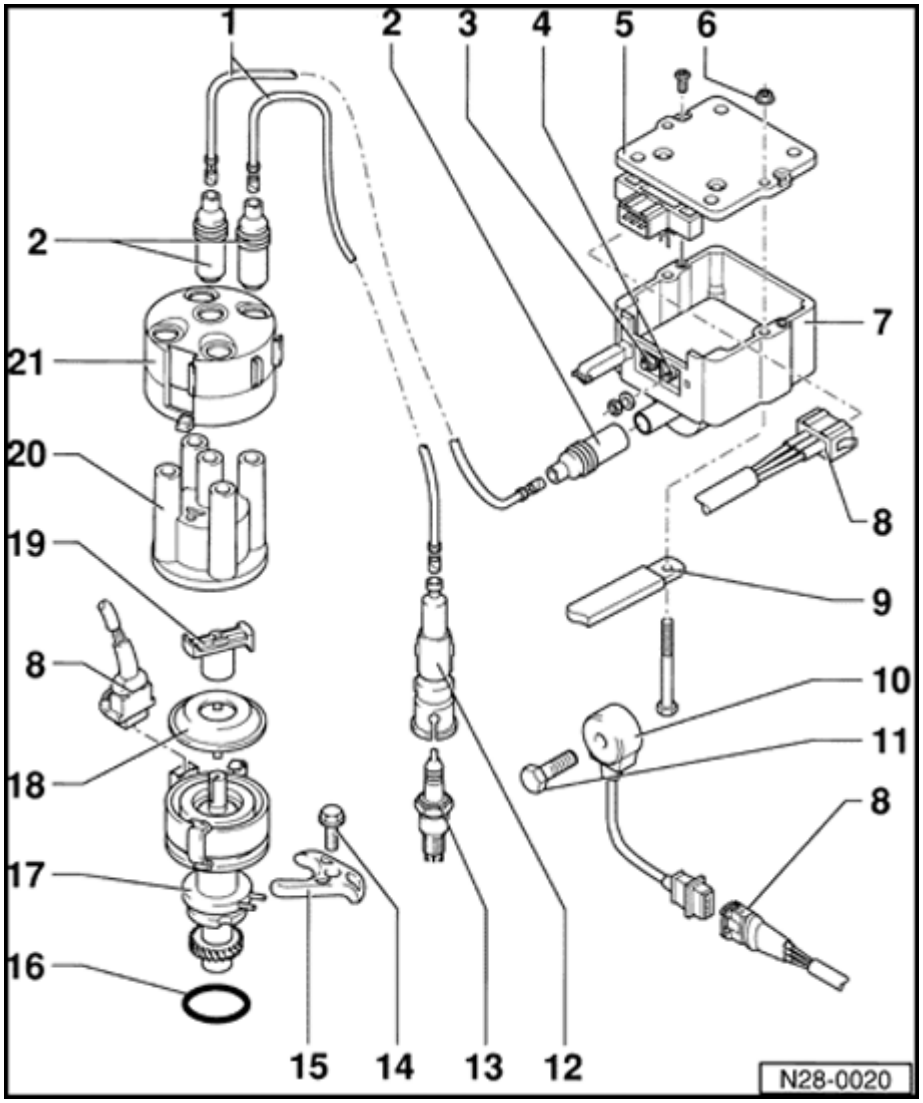

16 - O-ring

- Replace if damaged

17 - Distributor with Camshaft Position (CMP) sensor - G40-*

- Installing ⇒ page 28-8
- Checking CMP sensor ⇒ page 28-15

18 - Dust cap

19 - Rotor arm

- Marking: R1
- Resistance: 0.6-1.4 kΩ

20 - Distributor cap

- Check for cracks and signs of tracking
- Check contact wear
- Clean before fitting

- Check carbon brush for wear and freedom of movement

21 - Shielding cap

28-5

Safety precautions

WARNING!

Be alert when working on or near the engine. High ignition secondary voltage can cause serious personal injury and damage vehicle components.

- ***DO NOT touch or disconnect ignition system wires when the engine is running or being cranked at starting RPM.***
- ***DO NOT operate the starter if the fuel injectors have been removed.***

Be sure the ignition is switched OFF, when:

- ***Disconnecting ignition wires***
- ***Disconnecting fuel injection system wiring***
- ***Connecting or disconnecting test equipment leads***
- ***Disconnecting the battery***
- ***Washing the engine or engine compartment.***

BEFORE cranking the engine at starting RPM (such as for compression testing) disable the ignition and fuel injection systems:

- ***Disconnect the ignition coil power output stage.***
- ***Disconnect harness connectors from all fuel injectors.***

- ***After the work is completed, erase Diagnostic Trouble Code (DTC) memory.***

28-6

CAUTION!

BEFORE disconnecting the battery:

- ***Stop the engine.***
- ***Be sure the ignition is switched OFF (also applies when connecting the battery). Failure to do so may damage the Engine Control Module (ECM).***
- ***Be sure of the proper radio code (for vehicles equipped with coded anti-theft radio).***

Be sure the battery negative (-) cable is disconnected, when:

- ***Working on the electrical system***
- ***Resistance (spot) welding or electric arc welding anywhere on the vehicle.***

When connecting and disconnecting electrical test equipment (LED voltage tester, multimeter, etc.):

- ***Be sure the ignition is switched OFF.***
- ***Use correct adapters from the VW 1594 connector test kit.***

For any work affecting the Engine Control Module (ECM):

- ***BEFORE disconnecting the ECM harness connector, switch the ignition OFF and WAIT at least 20 seconds. Failure to do so may damage the ECM.***
- ***DO NOT connect any outside voltage source to stimulate an output signal at the ECM.***

28-7

Technical data, spark plugs

Engine code	ABA
Ignition timing1)	
Checking	⇒ page 24-23
Firing order	1-3-4-2
Spark plugs1)	
VW/Audi	101 000 044 AA
Manufacturer's designation	FR 8 DS
Electrode gap 2)	0.8 mm (0.031 in.)
Tightening torque	30 Nm (22 ft lb)

1) Not adjustable

2) Gap between ground electrodes and center electrode insulation

28-8

Distributor, removing and installing

Special tools, testers and auxiliary items

- Pin wrench Matra V159
- Torque wrench VAG 1331 (5-50 Nm)

Note:

The Motronic Engine Control Module (ECM) requires the Cyl. 1 TDC signal from the camshaft position sensor in the distributor in order to allocate the fuel injection and knock sensor systems according to the firing order.

Checking Cyl.1 Top Dead Center (TDC) markings

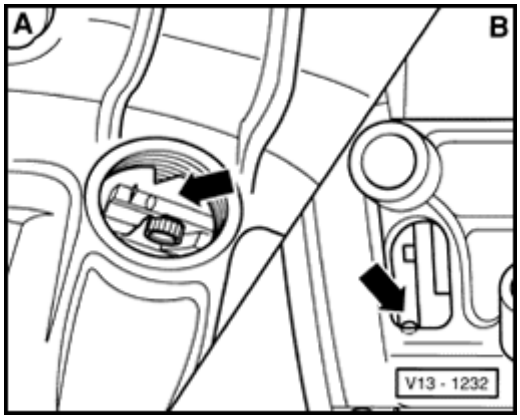

- Set flywheel -A- or automatic transmission drive plate -B- to align marks for Cyl.1 TDC.

28-9

Engine removed

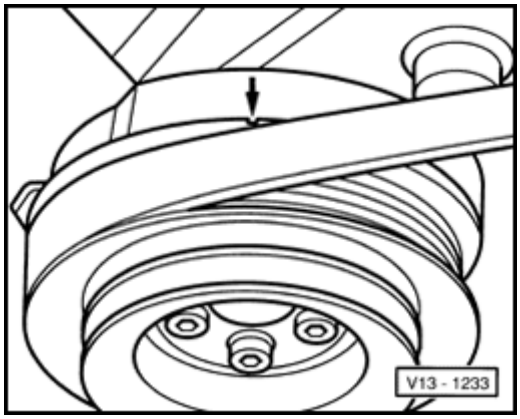

➢ Set vibration damper (V-belt pulley) to mark for Cyl.1 TDC.

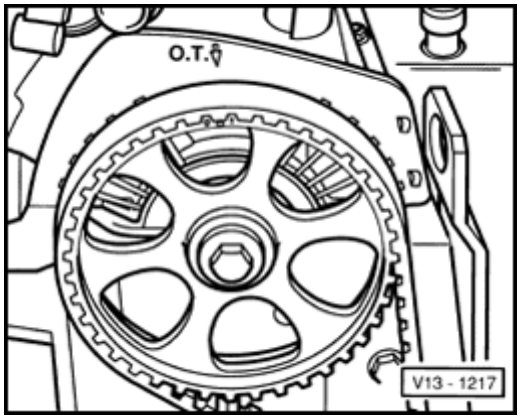

➢

- Mark on camshaft sprocket must align with arrow on cylinder head cover.

28-10

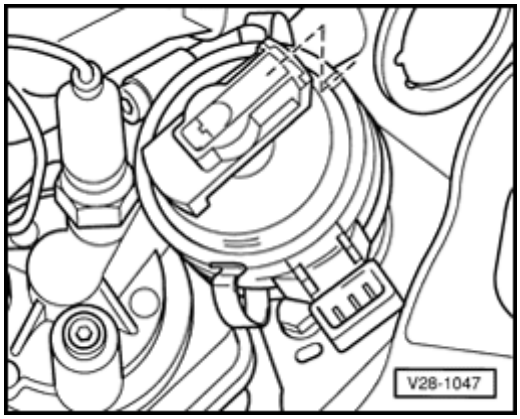

- Mark on distributor housing must align with mark on rotor arm or camshaft position sensor cover.

Removing

- Crankshaft and camshaft in Cyl.1 TDC position

- Remove distributor.

Installing

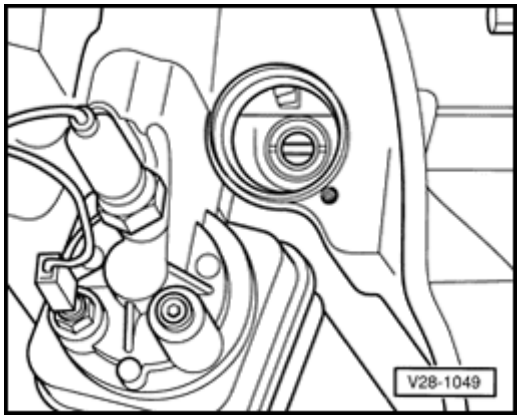

- Align oil pump shaft drive lug parallel to crankshaft.

28-11

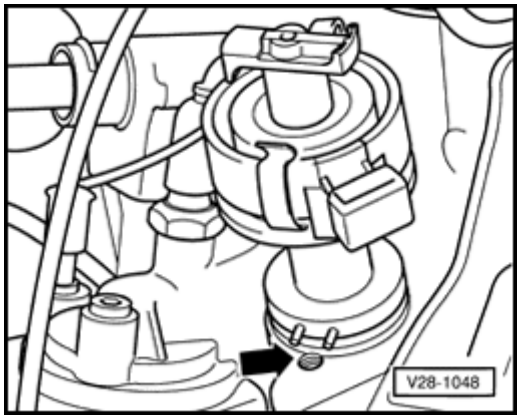

- Install distributor.
  - Pins on distributor must point toward mounting bolt threaded hole (arrow).

Note:

When installing, turn the rotor arm slightly the the right of the distributor marking (clockwise). When inserting the distributor and meshing the drive gears, the rotor arm will turn back toward the marking.

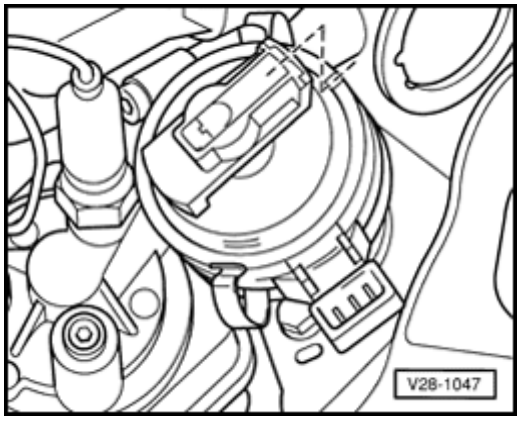

- Mark on distributor housing must align with mark on rotor arm or camshaft position sensor cover.

- Tighten distributor securing bolt.

  Tightening torque: 25 Nm (18 ft lb)

If the markings cannot be aligned correctly:

- Loosen toothed drive belt tensioner roller and remove toothed belt from camshaft sprocket.

28-12

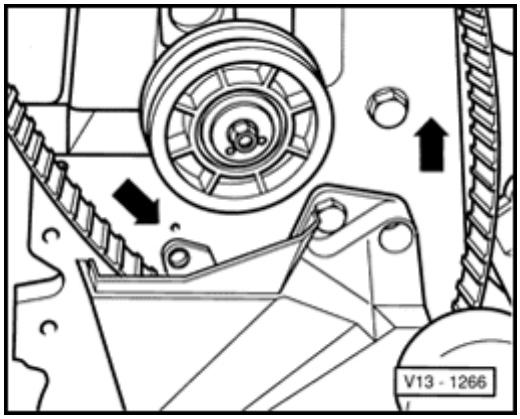

- Turn intermediate shaft sprocket with toothed drive belt (in direction of arrows) until rotor arm aligns with markings for Cyl.1 on distributor housing.

  (Toothed belt slides over crankshaft sprocket.)

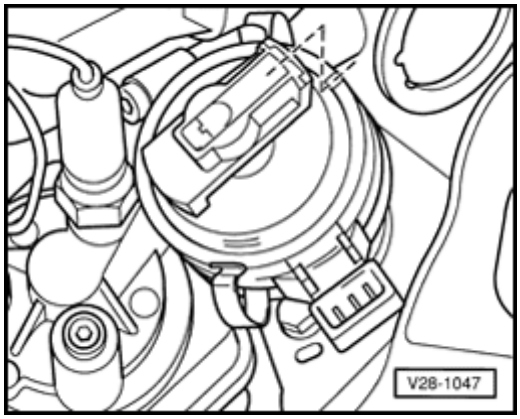

- Mark on distributor housing must align with mark on rotor arm or camshaft position sensor cover.

- Position toothed drive belt onto tensioner roller and camshaft sprocket.

Note:

For easier installation of the toothed belt, loosen the tensioner roller lock nut by only approx. one thread.

28-13

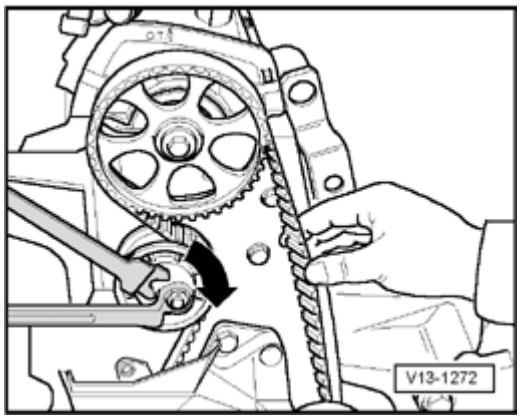

- Turn tensioner with pin wrench (e.g. Matra V159) in direction of arrow to adjust toothed drive belt tension.
  - It must be just possible to turn the toothed belt through 90 ° with the thumb and forefinger in the center between camshaft and intermediate shaft sprockets.
- Tighten tensioner lock nut.

  Tightening torque: 45 Nm (33 ft lb)
- Rotate crankshaft two full turns and check adjustment.
- Check distributor housing and rotor arm markings.
- Install upper toothed drive belt cover.
- Before installing, clean distributor cap, check for cracks and signs of tracking, and replace if necessary.

28-14

Ignition timing control, checking

Special tools, testers and auxiliary items

- VAG 1767 ignition tester, or VAG 1367 ignition tester with VAG 1367/8 HT pick-up clamp

Check conditions

- Engine oil temperature at least 80 °C (176 °F)

Test sequence

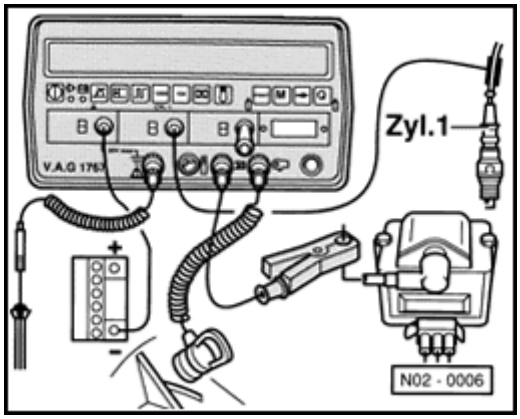

- Connect VAG 1767 ignition tester, or VAG 1367 ignition tester with VAG 1367/8 HT pick-up clamp.
- Start engine and run at idle speed.
- Set ignition tester to 3000 RPM.
- Slowly increase engine speed to slightly above 3000 RPM until the ignition timing (advance figure) is indicated.

  Specification: 29 °-34 ° before TDC

If the specification is not attained:

- Replace Motronic Engine Control Module (ECM) J220 ⇒ page 24-9 , item 16 .

28-15

Camshaft Position (CMP) sensor, checking

Special tools, testers and auxiliary items

- VAG 1598/18 test box
- Multimeter (Fluke 83 or equivalent)
- VW 1594 connector test kit
- Wiring diagram

Test sequence

- Disconnect harness connector from sensor (distributor).

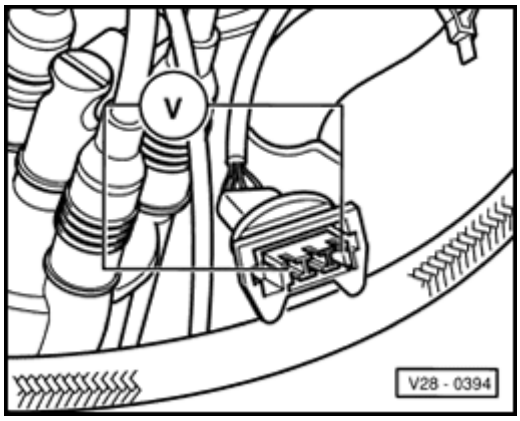

- Connect multimeter to measure voltage at ou connector terminals using adapter cables fro VW 1594.
- Switch ignition on.

  Specification: min. 4.5 volts
- Switch ignition off.

If the specification is not attained:

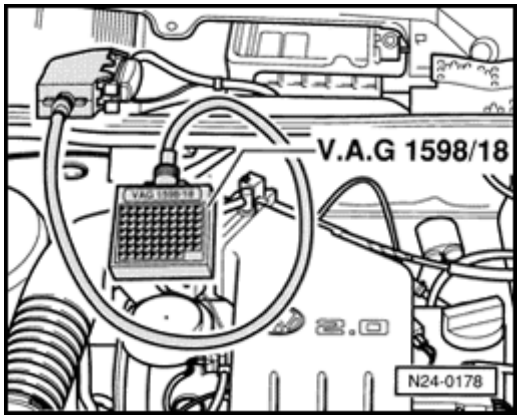

- Connect VAG 1598/18 test box to ECM wirir harness.

28-16

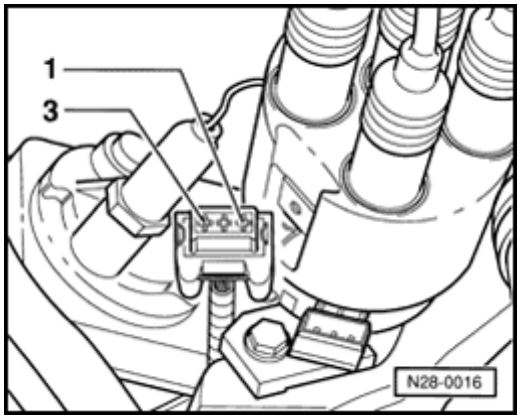

- Check wiring for open circuits between test box and 3-pin connector, according to wiring diagram.
  - Terminal 1 and test box socket 56
  - Terminal 2 and test box socket 44
  - Terminal 3 and test box socket 41
  - Wire resistance: Max. 1.5 Ω
- Additionally check wires for short circuits to one another.
  - Terminal 3 and test box socket 44
  - Terminal 3 and test box socket 56
  - Terminal 2 and test box socket 56
  - Specification: ∞ Ω (no continuity)

If no wiring malfunction is detected and voltage was present between terminals 1 and 3:

- Replace distributor with CMP sensor ⇒ page 28-4 , item 17 .

If no wiring malfunction is detected and no voltage was present between terminals 1 and 3:

- Replace Motronic Engine Control Module (ECM) J220 ⇒ page 24-9 , item 16 .

28-17

Knock sensor, checking

Special tools, testers and auxiliary items

- VAG 1598/18 test box
- Multimeter (Fluke 83 or equivalent)
- VW 1594 connector test kit
- Wiring diagram

Test sequence

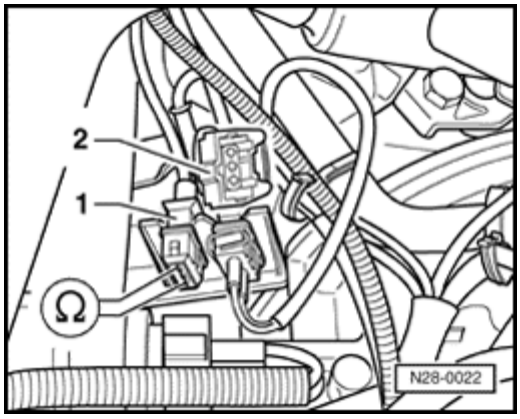

- Disconnect brown 3-pin harness connector -2- from knock sensor 1 G61 socket -1-.
- Measure resistance between terminals 1 and 2, 1 and 3 and 2 and 3 at knock sensor connector socket.

  Specification: ∞ Ω (no continuity)

If the specification is attained:

- Connect VAG 1598/18 test box to ECM wiring harness.

28-18

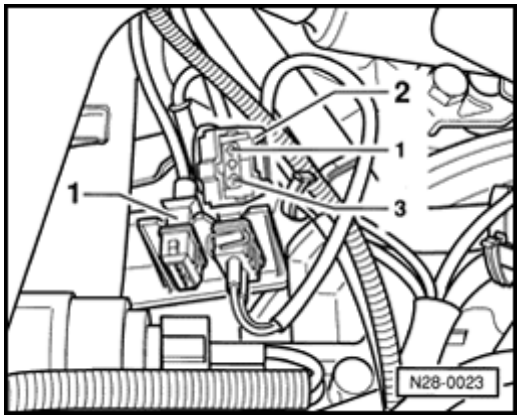

- Check wiring between test box and 3-pin connector for open circuit according to wiring diagram.
  - Terminal 1 and test box socket 34
  - Terminal 2 and test box socket 33
  - Terminal 3 and test box socket 56
  - Wire resistance: Max. 1.5 Ω
- Additionally check wires for short to one another.
  - Terminal 3 and test box socket 34
  - Terminal 3 and test box socket 33
  - Terminal 2 and test box socket 34
  - Specification: ∞ Ω (no continuity)

If no wiring malfunction is detected:

- Loosen knock sensor and tighten again to 20 Nm (15 ft lb).

If the malfunction is still present (stored again in DTC memory):

- Replace knock sensor.

28-19

Ignition coil, checking

Special tools, testers and auxiliary items

- Multimeter (Fluke 83 or equivalent)
- VW 1594 connector test kit

Test sequence

- Disconnect harness connector and high-volt cable from ignition coil N152.

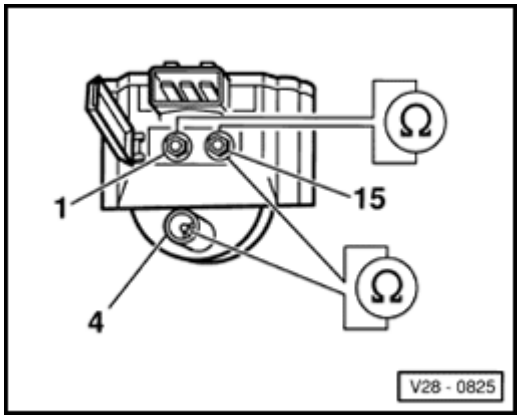

- Check primary resistance with between terminals 1 and 15 with multimeter.

  Specification: 0.5-1.2 Ω

- Check secondary resistance between termin 4 and 15 with multimeter.

  Specification: 3-4 k Ω

If the specifications are not attained:

- Replace ignition coil N152.

28-20

Ignition coil power output stage, checking

Special tools, testers and auxiliary items

- VAG 1598/18 test box
- Multimeter (Fluke 83 or equivalent)
- VAG 1527B voltage tester
- VW 1594 connector test kit
- Wiring diagram

Checking voltage supply

- Disconnect 3-pin harness connector from ignition coil.

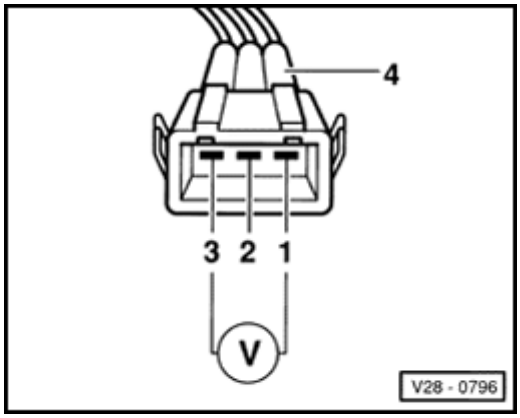

- Connect multimeter to measure voltage betw connector terminals 1 and 3 using adapter cables from VW 1594 test kit.
- Switch ignition on.

  Specification: Min. 9 volts

If no voltage is present:

- Switch ignition off.
- Check wire for open circuit between 3-pin connector terminal 1 and ground, according wiring diagram.

  Wire resistance: Max. 1.5 Ω

28-21

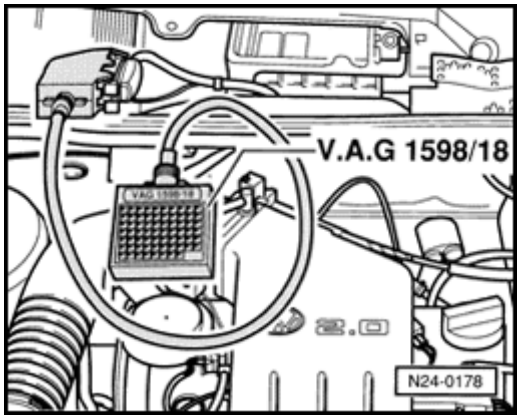

- Connect VAG 1598/18 test box to ECM wiring harness.
- Check wire for open circuit between test box socket 38 and 3-pin connector terminal 3, according to wiring diagram.

  Wire resistance: Max. 1.5 Ω

Checking activation

- Disconnect harness connector for fuel injectors 1 and 4, and remove fuse 18.

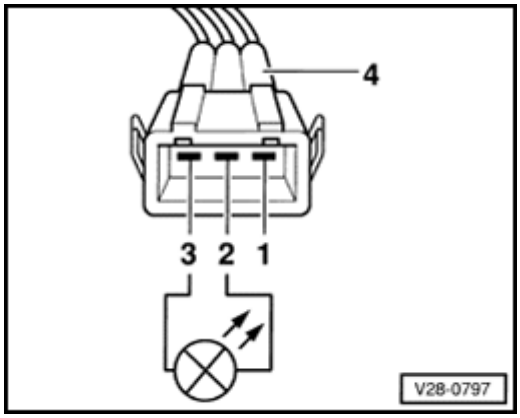

- Connect VAG 1527B voltage tester to connector terminals 2 and 3 using adapter cables from VW 1594 and VW 1594/15 adapter.
- Operate starter and check ignition signal from Motronic ECM.
  - LED must flicker
- Switch ignition off.

If LED does not flicker:

28-22

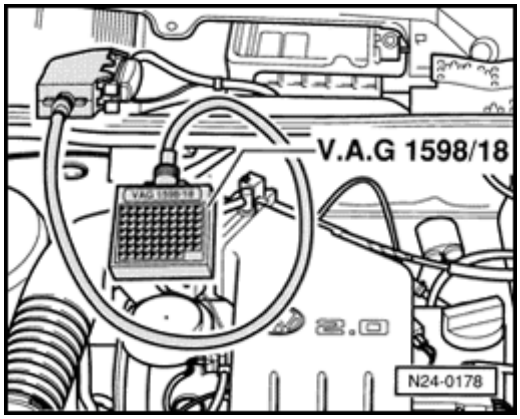

- Connect VAG 1598/18 test box to ECM wiring harness.
- Check wire for open circuit between test box socket 8 and 3-pin connector terminal 2, according to wiring diagram.

  Wire resistance: Max. 1.5 Ω
- Additionally check wires for short to one another.

  Specification: ∞ Ω (no continuity)

If no wiring malfunction is detected and voltage was present between terminals 1 and 3:

- Replace Motronic ECM J220 ⇒ page 24-9 , item 16 .

If the voltage supply and activation is OK:

- Re-connect 3-pin connector and high-voltage cable to coil.

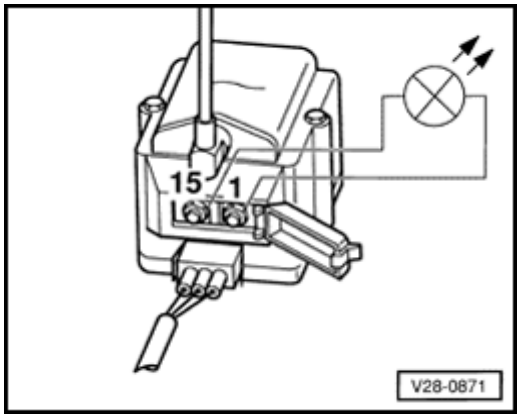

- Connect VAG 1527B voltage tester to coil terminals 1 and 15.

WARNING!

During the test, DO NOT touch the ignition coil terminals or the high-voltage cables.

- Operate starter.
  - LED must flicker
- If necessary replace ignition coil power output stage N157.

Volkswagen Passat

Official Factory Repair Manual

1996, 1997
Gasoline, Turbo Diesel, TDI
4-cylinder and VR6, including wagon

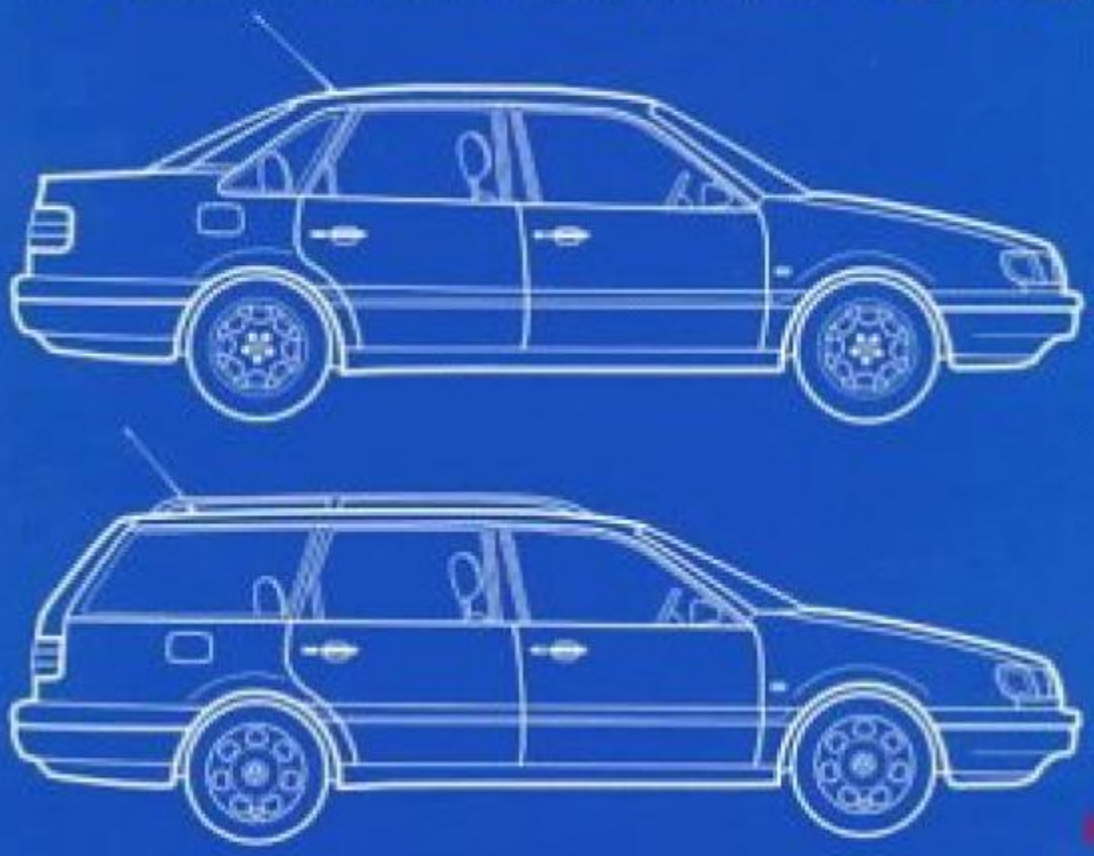

Robert Bentley

PASSAT '95 - '97

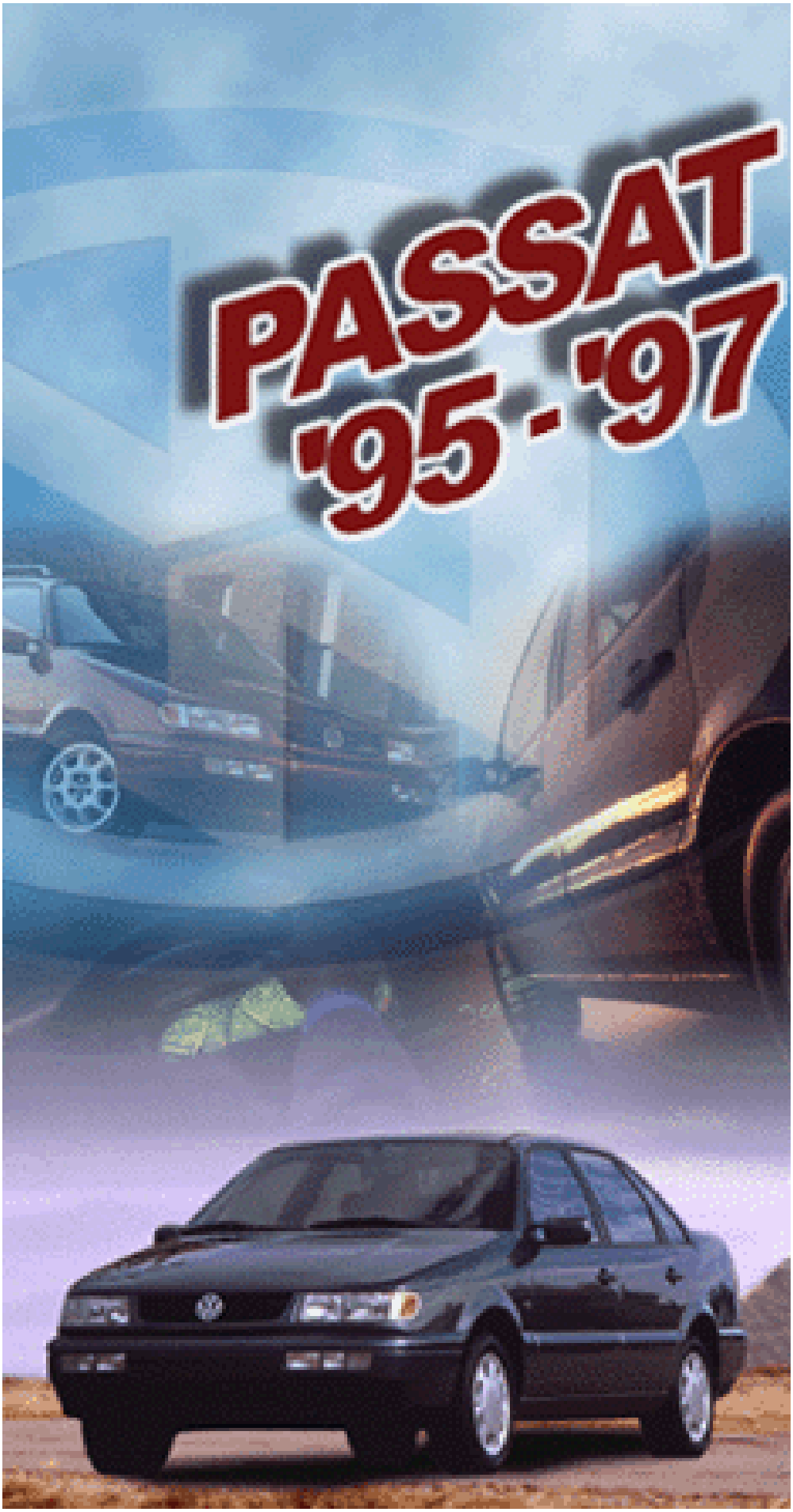

2.0 Liter 4-Cyl. 2V Fuel Injection & Ignition, Engine Code(s): ABA m.y. 1996-1997

01 - On Board Diagnostic (OBD)

On Board Diagnostic (OBD)
Malfunction Indicator Lamp (MIL), significance
On Board Diagnostic (OBD) technical data

VAG 1551 Scan Tool (ST), connecting and selecting "Engine Electronics" address word 01
Control module, coding (function 07)
Diagnostic Trouble Code (DTC) memory, checking (function 02)
Diagnostic Trouble Code (DTC) table
Diagnostic Trouble Code (DTC) memory, erasing (function 05)
Readiness code, reading (function 15)
Readiness code, creating
Output Diagnostic Test Mode (DTM) (function 03)
Measuring value block, reading (function 08)
Display group overview

VAG 1551 Scan Tool (ST), connecting and selecting "CARB/OBD II" address word 33
Current data, mode 1
Freeze frame data, mode 2
DTC memory, mode 3
Clear DTC memory, mode 4
Oxygen sensor signal (B1-S1), mode 5

24 - Multiport Fuel Injection (MFI)

Multiport fuel injection and ignition system
Component locations, overview
General information
Fuel injection system, components
Intake manifold, upper, removing and installing
Intake manifold, lower, removing and installing
Air Cleaner (ACL), removing and installing
Safety precautions
Rules for cleanliness
Technical data
Idle speed, checking
Heated Oxygen Sensor (HO2S) and Oxygen Sensor (O2S) control, checking (before three way catalytic converter)
Oxygen Sensor (O2S) heating, checking (before three way catalytic converter)
Heated Oxygen Sensor (HO2S) 2 and Oxygen Sensor (O2S) control, checking (after three way catalytic converter)

Oxygen Sensor (O2S) heating, checking (after three way catalytic converter)
Oxygen Sensor (O2S) aging, checking (before three way catalytic converter)
Engine operation, checking
Mass Air Flow (MAF) sensor, checking
Throttle valve control module -J338-, checking
Basic setting, initiating
Engine Coolant Temperature (ECT) sensor -G62-, checking
Intake Air Temperature (IAT) sensor -G72-, checking
Engine speed (RPM) sensor -G28-, checking
Speedometer Vehicle Speed Sensor (VSS) -G22- signal, checking
Engine Control Module (ECM) voltage supply, checking
Signal from automatic transmission, checking
Signal from A/C compressor, checking
Fuel injectors, checking
Fuel pressure regulator and residual pressure, checking
Intake air system, checking for leaks (outside air)
Intake air preheating, checking

28 - Ignition/Glow plug system

Multiport fuel injection and ignition system
Ignition system, servicing
Safety precautions
Technical data, spark plugs
Distributor, removing and installing
Ignition timing, checking
Misfire detection, checking
Ignition timing control, checking
Camshaft Position (CMP) sensor, checking
Knock Sensor (KS) and knock control, checking
Ignition coil, checking
Ignition coil power output stage, checking

On Board Diagnostic (OBD)

Function

The Engine Control Module (ECM) -J220- for the fuel injection and ignition system is e uipped with a Diagnostic Trouble Code (DTC) memory

If malfunctions occur in the sensors and components being monitored, they will be stored in the DTC memory together with an indication of the type of malfunction

Malfunctions which only occur sporadically will be indicated on the display by the addition /SP The cause of sporadic malfunctions can be e g a loose contact or a brief open circuit If a sporadic malfunction does not occur again within 40 engine starts, it will be erased from DTC memory

The stored malfunctions are output after initiating the malfunction display ⇒ Page 01-12

After malfunctions have been eliminated, DTC memory must be erased (⇒ Page 01-31) and the repair must be verified via the appropriate display group ⇒ Page 01-35 , Readiness code, creating

The readiness code must be created each time the DTC memory is erased and when the voltage supply to ECM -J220- is interrupted ⇒ Page 01-35

Malfunction Indicator Lamp (MIL), significance

If malfunctions are recognized and verified by the engine control module, they will be indicated by switching on the malfunction indicator lamp

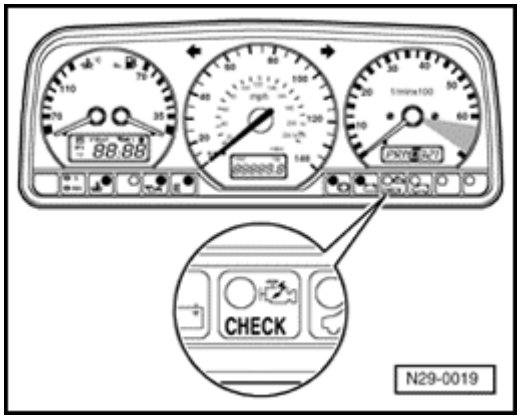

Location of malfunction indicator lamp (MIL)

Note:

The MIL can be switched on in the flashing or permanently on mode. The Diagnostic Trouble Code (DTC) memory must be checked in every case ⇒ *Page 01-12* .

- *Flashing: There is a malfunction that can damage the Three Way Catalytic Converter (TWC) if driven in this condition. In this case, the vehicle must not be driven using wide open throttle, but with partial throttle only, during which the MIL is continuously illuminated rather than flashing.*
- *Permanently on: There is a malfunction which will increase exhaust emissions. Check engine and/or automatic transmission control modules.*
- *If the MIL does not light up: If there is an engine running problem, or a customer complaint of one, perform a functional check of the MIL. Then DTC memory must be checked because malfunctions that do not switch on the MIL immediately can also be stored.*

Functional c ec :

- Switch ignition on

  - MIL must light-up

If the MIL does not light-up with ignition switched on

- Check wiring to MIL as follows

Cause	Remedy
MIL is not activated or does not light-up due to open circuit	- Switch ignition off - Connect test box VAG 15 8/18 - Bridge test box sockets 1 and 3 - Switch ignition on • MIL must light-up If the MIL does not light-up - Switch ignition off - Check bulb in the MIL If bulb is OK - Locate and eliminate short or wiring open circuit from Engine Control Module (ECM) to MIL using wiring diagram
Malfunction cause ▶	If no malfunction can be detected in the wiring to MIL ECM -J220- faulty - Replace ECM, erase Diagnostic Trouble Code (DTC) memory

If the MIL lights-up with ignition switched on, continue check as follows

- Start engine and run at idle speed

• MIL must go out after a few seconds

If the MIL does not go out

- Check DTC memory ⇒ Page 01-12

If no malfunction is stored

Cause	Remedy
MIL is permanently activated by short circuit to Ground (G D)	- Switch ignition off - Connect test box VAG 15 8/18 - Check resistance between test box socket 3 and vehicle Ground (G D), specification ∞ ohms (Ω) If the specification is not attained ♦ Short circuit to (G D) in the activation wire from Engine Control Module (ECM) -J220- to MIL - Locate and eliminate this malfunction using wiring diagram
Malfunction cause ▶	If the specification ∞ ohms (Ω) is attained and no short circuit to (G D) can be found ECM -J220- faulty - Replace ECM, erase Diagnostic Trouble Code (DTC) memory

On Board Diagnostic (OBD) tec nical data

E uipped wit

- Diagnostic Trouble Code (DTC) memory
- Rapid data transfer

Engine control module identification

⇒ Page 01-7 VAG 1551 Scan Tool (ST), connecting and selecting Engine Electronics address word 01

Engine Control Module (ECM) functions

Note:

The ECM is equipped with various functions. Some functions can be carried out with ignition switched on or with engine running. The following table details the requirements for performing the individual functions.

Function performa le wit		Ignition switc ed on	Engine idling
02	Check DTC Memory	es	es
03	Output Diagnostic Test Mode	es	o
04	Basic Setting	es[1)]	es[2)3)]
05	Erase DTC Memory	es	es
06	End Output	es	es
07	Code Control Module	es	o
08	Read Measuring Value Block	es	es

[1)] Must be performed after the following work replacement of Engine Control Module (ECM), throttle valve control module or engine

[2)] Only possible when coolant temperature is above 80 °C (176 °F) Prior to this, function is blocked

[3)] Must be performed when checking idle speed

VAG 1551 Scan Tool (ST), connecting and selecting "Engine Electronics" address word 01

Special tools, testers and au iliary items

- VAG 1551/1552 scan tool with VAG 1551/3 adapter cable

Note:

The VAG 1552 scan tool can be used instead o the VAG 1551 scan tool, however a print-out is not possible.

Test conditions

- Fuse 22 OK
- Battery voltage at least 11 volts
- Ground (G D) connections on engine and transmission OK (engine G D connection ⇒ Page 24-3 , item 1)

or se uence

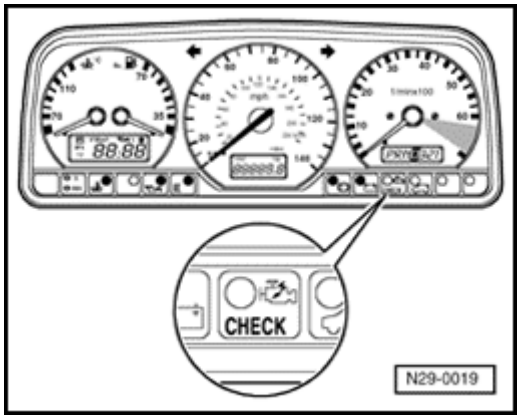

- Open cover for Data Link Connector (DLC)
- Connect VAG 1551/1552 scan tool with VAG 1551/3 adapter cable

Depending upon desired function

- Switch ignition on or start engine ⇒ Page 01 Engine Control Module (ECM) functions tabl

Note:

- *If the display does not show as indicated in the work sequence:*

⇒ *VAG 1551 scan tool operating instructions*

- *If due to an input malfunction "Error in communication link" is displayed, disconnect wire from VAG 1551/1552 scan tool, reconnect and repeat work step.*

V.A.G - On Board Diagnostic (OBD) EL
1 - Rapid data transfer
2 - Blin code output

Indicated on display[1)]

[1)] Operating modes 1 and 2 are displayed alternately

Operate VAG 1551/1552 scan tool taking into account the information on the display

- Press -1- button to select Rapid data transfer operating mode 1
- Press buttons -0- and -1- to select Engine Electronics address word 01 and press - - button to confirm

037 906 259B MOTRO IC M5 .9 AT V02 →
Coding 0006 SC

The VAG 1551 scan tool display will show the ECM identification, e g

- 037 06 25 B Part no of the ECM (for latest control module version ⇒ parts catalog)
- MOTRO IC M5 Injection and ignition system
- AT V02 Automatic transmission with Motronic system version 02

- HS V02 Manual transmission with Motronic system version 02

- Coding 00006 Coding variants

- SC orkshop code

Coding ariants:

Coding	Application
00006	Passat with manual transmission
00007	Passat with automatic transmission

Note:

Correct control module number details and coding are only given at idle speed.

If the coding differs from the vehicle version, then

- Check control module coding ⇒ Page 01-10

- Press → button

Rapid data transfer **EL** ⮜ Indicated on display

Select function

- For additional steps see repair procedures

Control module, coding (function 07)

If the appropriate code for the vehicle is not displayed or if the control module has been replaced, the control module must be coded as follows

Special tools, testers and au iliary items

- VAG 1551/1552 scan tool with VAG 1551/3 adapter cable

or se uence

- Connect VAG 1551/1552 scan tool and with ignition switched on, select Engine Electronics address word 01 and press - - button to confirm input ⇒ Page 01-7

Rapid data transfer **Select function**	**EL**	⮜	Indicated on display - Press buttons -1- and -1- to select Log-in Procedure function 11 and press - - button to confirm input
Log-in rocedure **Input code num er**	**EL**	⮜	Indicated on display - Press buttons -0-, -1-, -2-, -8- and -3- to input log-in code 01283 and press - - button to confirm input
Rapid data transfer **Select function**	**EL**	⮜	Indicated on display - Press buttons -0- and -7- to select Code Control Module function 07 and press - - button to confirm input

Code Control Module EL

Input code num er (0-32000)

Indicated on display

- Input appropriate code number for this vehicle and press - - button to confirm input

Coding	Application
00006	Passat with manual transmission
00007	Passat with automatic transmission

037 906 259B MOTRO IC M5.9 AT V02 →

Coding 0006 SC

The VAG 1551 scan tool display will show the control module identification, e g

- Press → button

Rapid data transfer EL

Select function

Indicated on display

- Press buttons -0- and -6- to select End Output function 06 and press - - button to confirm input

Note:

The code entered and shown on the display will not be used by the Engine Control Module (ECM) until the ignition has been switched off once. An incorrect coding leads to:

- *Engine running malfunctions*
- *Increased fuel consumption*
- *Increased emissions*
- *Malfunctions stored in Diagnostic Trouble Code (DTC) memory which are not actually present*
- *Reduced transmission life*

Diagnostic Trou le Code (DTC) memory, c ec ing (function 02)

Special tools, testers and au iliary items

- VAG 1551/1552 scan tool with VAG 1551/3 adapter cable

or se uence

- Connect VAG 1551/1552 scan tool and select Engine Electronics address word 01 ⇒ Page 01-7 Engine must be running at idle

Note:

If engine does not start, operate starter for approx. 6 seconds and then do not switch ignition off.

- Switch printer on with PRI T button (warning lamp in button lights up)

Rapid data transfer **EL** ⮜ Indicated on display

Select function

- Press buttons -0- and -2- to select Check DTC Memory function 02 and press - - button to confirm input

DTC recogni ed → ⮜ The number of malfunctions stored or o DTC recognized will be shown on the display

Note:

If something different is indicated on the display:

⇒ *VAG 1551 scan tool operating instructions.*

If one or more malfunctions are stored, the malfunctions stored will be displayed and printed out one after the other

If no malfunction is stored

- Press → button

Rapid data transfer **EL**

Select function

Then display will show

- Press buttons -0- and -6- to select End Output function 06 and press - - button to confirm input
- Locate and eliminate malfunctions printed out as per Diagnostic Trouble Code (DTC) table ⇒ Page 01-14
- Erase DTC memory ⇒ Page 01-31

Note:

If a malfunction is present which is not recognized by the On Board Diagnostic (OBD), perform further troubleshooting using the information in:

⇒ Electrical Wiring Diagrams, Troubleshooting & Component Locations

Diagnostic Trou le Code (DTC) ta le

Note:

- *The DTC overview is listed according to SAE or VAG codes.*

- *After repairing malfunctions, DTC memory must be erased (⇒ Page 01-31) and the repair verified via the appropriate display group ⇒ Page 01-35 , Readiness code, creating.*

DTC		Malfunction te t	Malfunction elimination
SAE	**VAG**		
---	00524	Knock Sensor 1 -G61 Signal too low	- Check knock sensor and knock control ⇒ Page 28-25
---	00532	Supply Voltage (B) Signal too high	- Check generator Electrical iring Diagrams, Troubleshooting Component Locations
---	00543	RPM upper Limit exceeded	- Erase DTC memory ⇒ Page 01-31
---	00545	Engine/Trans Electrical Connection	- Locate and correct malfunction in wiring to automatic transmission per wiring diagram Electrical iring Diagrams, Troubleshooting Component Locations

DTC		Malfunction te t	Malfunction elimination
SAE	VAG		
---	00577	Knock Sensor Control Cyl 1 Control limit exceeded	- Check knock sensor and knock control ⇒ Page 28-25 - Correct abnormal engine running noises (auxilliary assemblies loose, bracket/bolts sheared) - Check connectors and wiring per wiring diagram Electrical iring Diagrams, Troubleshooting Component Locations - Change grade of fuel - Loosen knock sensor and tighten again to 20 m (15 ft lb)
---	00578	Knock Sensor Control Cyl 2 Control limit exceeded	
---	0057	Knock Sensor Control Cyl 3 Control limit exceeded	
---	00580	Knock Sensor Control Cyl 4 Control limit exceeded	
---	00652	Transmission Range Controller Open/Short circuit to B	- Locate and repair faulty wiring to automatic transmission using wiring diagram Electrical iring Diagrams, Troubleshooting Component Locations
		Open/Short circuit to Ground	

DTC		Malfunction te t	Malfunction elimination
SAE	VAG		
---	00668	Battery Positive Voltage (B) Term 30 signal too high	- Check generator Electrical iring Diagrams, Troubleshooting Component Locations - Check battery - Check connectors and wiring per wiring diagram Electrical iring Diagrams- Troubleshooting Component Locations
		Battery Positive Voltage (B) Term 30 Signal too low	
		Battery Positive Voltage (B) Term 30 Interrupted	
		Battery Positive Voltage (B) Term 30 Implausible signal	
---	00750	Malfunction Indicator Lamp (MIL) Faulty	- Check MIL LED Electrical iring Diagrams, Troubleshooting Component Locations
---	01165	Throttle body control module -J338	- Check throttle valve control module ⇒ Page 24-6
---	01177	Engine Control Module Faulty	- Replace engine control module ⇒ Page 24-1 , item 4

Diagnostic code (DTC)		Malfunction te t	Malfunction elimination
SAE	VAG		
P0102	16486	Mass or Volume Air Flow Circuit Low Input	- Check Mass Air Flow (MAF) sensor ⇒ Page 24-63
P0103	16487	Mass or Volume Air Flow Circuit High Input	
P0112	164 6	Intake Air Temperature Circuit Low Input	- Check intake air temperature sensor ⇒ Page 24- 5
P0113	164 7	Intake Air Temperature Circuit High Input	
P0116	16500	Engine Coolant Temperature Circuit Range/Performance	- Check Engine Coolant Temperature (ECT) sensor ⇒ Page 24-8
P0117	16501	Engine Coolant Temperature Circuit Low Input	
P0118	16502	Engine Coolant Temperature Circuit High Input	

Diagnostic code (DTC)		Malfunction te t	Malfunction elimination
SAE	VAG		
P0120	16504	Throttle Position Sensor A Circuit Malfunction	- Check throttle valve control module ⇒ Page 24-6 - Check MAF sensor ⇒ Page 24-63
P0121	16505	Throttle Position Sensor A Circuit Range/Performance Problem	
P0122	16506	Throttle Position Sensor A Circuit Low Input	
P0125	1650	Insufficient Coolant Temperature for Closed Loop Fuel Control	- Check ECT sensor ⇒ Page 24-8 - Check thermostat ⇒ *Repair Manual, 2.0 Liter 4-Cyl. 2V Engine Mechanical, Engine Code(s): ABA m.y. 1995 - 1997, Repair Group 19*
P0131	16515	02 Sensor Circuit Low Voltage (Bank 1, Sensor 1)	- Check Heated Oxygen Sensor (HO2S) and Oxygen Sensor (O2S) control (before three way catalytic converter) ⇒ Page 24-26 - Check O2S aging (before three way catalytic converter) ⇒ Page 24-57
P0132	16516	02 Sensor Circuit High Voltage (Bank 1, Sensor 1)	
P0133	16517	02 Sensor Circuit Slow Response (Bank 1, Sensor 1)	
P0134	16518	02 Sensor Circuit o Activity Detected (Bank 1, Sensor 1)	
P0135	1651	02 Sensor Heater Circuit Malfunction (Bank 1, Sensor 1)	- Check O2S heating (before three way catalytic converter) ⇒ Page 24-36

Diagnostic code (DTC)		Malfunction te t	Malfunction elimination
SAE	VAG		
P0137	16521	02 Sensor Circuit Low Voltage (Bank 1, Sensor 2)	- Check HO2S 2 and O2S control (after three way catalytic converter) ⇒ Page 24-43
P0138	16522	02 Sensor Circuit High Voltage (Bank 1, Sensor 2)	
P0140	16524	02 Sensor Circuit o Activity Detected (Bank 1, Sensor 2)	
P0141	16525	02 Sensor Heater Circuit Malfunction (Bank 1, Sensor 2)	- Check O2S heating (after three way catalytic converter) ⇒ Page 24-50

Diagnostic code (DTC)		Malfunction te t	Malfunction elimination
SAE	VAG		
P0171	16555	System too Lean (Bank 1)	- Check intake air system for leaks ⇒ Page 24-125
			- Check HO2S and O2S control (before three way catalytic converter) ⇒ Page 24-26
			- Check secondary air injection system ⇒ Page 01-72 , output Diagnostic Test Mode (DTM) and ⇒ *Repair Manual, 2.0 Liter 4-Cyl. 2V Engine Mechanical, Engine Code(s): ABA m.y. 1995 - 1997, Repair Group 26*
			- Check MAF sensor ⇒ Page 24-63
			- Check fuel pump ⇒ *Repair Manual,2.0 Liter 4-Cyl. 2V Engine Mechanical, Engine Code(s): ABA m.y. 1995 - 1997, Repair Group 20*
			- Check fuel injectors ⇒ Page 01-72 , output Diagnostic Test Mode (DTM) and ⇒ Page 24-116

Diagnostic code (DTC)		Malfunction te t	Malfunction elimination
SAE	VAG		
P0172	16556	System too Rich (Bank 1)	- Check HO2S and O2S control (before three way catalytic converter) ⇒ Page 24-26
			- Check fuel pressure regulator ⇒ Page 24-121
			- Check exhaust system for leaks ⇒ *Repair Manual, 2.0 Liter 4-Cyl. 2V Engine Mechanical, Engine Code(s): ABA m.y. 1995 - 1997, Repair Group 26*
P0300	16684	Random Misfire Detected	- Check components of ignition system ⇒ Page 28-1
			- Check misfiring detection ⇒ Page 28-16
			- Check ignition coil ⇒ Page 28-30
			- Check engine speed (RPM) sensor ⇒ Page 24-100
			- Change type of fuel

Diagnostic code (DTC)		Malfunction te t	Malfunction elimination
SAE	VAG		
P0301	16685	Cylinder 1 Misfire Detected	- Check fuel injectors ⇒ Page 01-72 , (output DTM) and ⇒ Page 24-116 - Check ignition coil ⇒ Page 28-30 - Check ignition coil power output stage ⇒ Page 28-31 - Check misfiring detection ⇒ Page 28-16
P0302	16686	Cylinder 2 Misfire Detected	
P0303	16687	Cylinder 3 Misfire Detected	
P0304	16688	Cylinder 4 Misfire Detected	
P0321	16705	Ign /Distributor Eng Speed Inp Circ Range/Performance	- Check engine speed (RPM) sensor ⇒ Page 24-100
P0322	16706	Ign /Distributor Eng Speed Inp Circ o Signal	
P0327[1)]	16711	Knock Sensor 1 Circuit Low Input	- Check Knock Sensor (KS) 1 and knock control ⇒ Page 28-25
P0341	16725	Camshaft Position Sensor Circuit Range/Performance	- Check Camshaft Position (CMP) sensor ⇒ Page 28-22
P0411	167 5	Sec Air Inj Sys Incorrect Flow Detected	- Check secondary air injection system ⇒ Page 01-72 , output Diagnostic Test Mode (DTM) and ⇒ *Repair Manual, 2.0 Liter 4-Cyl. 2V Engine Mechanical, Engine Code(s): ABA m.y. 1995 - 1997, Repair Group 26*

[1)] M 7 ➤ the SAE Diagnostic Trouble Code (DTC) is not displayed

Diagnostic code (DTC)		Malfunction te t	Malfunction elimination
SAE	VAG		
P0422	16806	Main Catalyst Efficiency Below Threshold (Bank 1)	- Check HO2S and O2S control (before three way catalytic converter) ⇒ Page 24-26 - Check O2S aging (before three way catalytic converter) ⇒ Page 24-57
P0440	16824	Evaporative Emission Control System Malfunction	- Check EVAP canister purge regulator valve ⇒ Page 01-72 , output Diagnostic Test Mode (DTM)
P0501	16885	Vehicle Speed Sensor Range/Performance	- Check vehicle speed sensor signal ⇒ Page 24-102
P0506	168 0	Idle Control System RPM Lower than Expected	- Check fuel pressure regulator and residual pressure ⇒ Page 24-121 - Check ignition timing ⇒ Page 28-14 - Check engine speed (RPM) sensor ⇒ Page 24-100 - Check battery voltage (B) - Check idle speed ⇒ Page 24-23
P0507	168 1	Idle Control System RPM Higher than Expected	
P0510	168 4	Closed Throttle Position Switch Malfunction	- Check throttle valve control module ⇒ Page 24-6
P0605	16 8	Internal Control Module Read Only Memory (ROM) Error	- Replace Engine Control Module (ECM) ⇒ Page 24-1 , item 4

Diagnostic code (DTC)		Malfunction te t	Malfunction elimination
SAE	VAG		
P1127	17535	Long Term Fuel Trim mul (B1) System too Rich	- Check MAF sensor ⇒ Page 24-63
			- Check HO2S and O2S control (before three way catalytic converter) ⇒ Page 24-26
			- Check HO2S 2 and O2S control (after three way catalytic converter) ⇒ Page 24-43
			- Check fuel pump ⇒ *Repair Manual, 2.0 Liter 4-Cyl. 2V Engine Mechanical, Engine Code(s): ABA m.y. 1995 - 1997, Repair Group 20*
			- Check Secondary Air Injection (AIR) system ⇒ Page 01-72 , output Diagnostic Test Mode (DTM) and ⇒ *Repair Manual, 2.0 Liter 4-Cyl. 2V Engine Mechanical, Engine Code(s): ABA m.y. 1995 - 1997, Repair Group 26*
			- Check fuel injectors ⇒ Page 01-72 , output Diagnostic Test Mode (DTM) and ⇒ Page 24-116

Diagnostic code (DTC)		Malfunction te t	Malfunction elimination
SAE	VAG		
P1128	17536	Long Term Fuel Trim mul (B1) System too Lean	- Check HO2S and O2S control (before three way catalytic converter) ⇒ Page 24-26
			- Check HO2S 2 and O2S control (after three way catalytic converter) ⇒ Page 24-43
			- Check fuel pump ⇒ *Repair Manual, 2.0 Liter 4-Cyl. 2V Engine Mechanical, Engine Code(s): ABA m.y. 1995 - 1997, Repair Group 20*
			- Check fuel injectors ⇒ Page 01-72 , output Diagnostic Test Mode (DTM) and ⇒ Page 24-116
			- Check EVAP canister purge regulator valve ⇒ Page 01-72 , output Diagnostic Test Mode (DTM)

Diagnostic code (DTC)		Malfunction te t	Malfunction elimination
SAE	VAG		
P1213	17621	Cyl 1-Fuel Injector Circ Short to B	- Check fuel injectors ⇒ Page 01-72 , output Diagnostic Test Mode (DTM) and ⇒ Page 24-116
P1214	17622	Cyl 2-Fuel Injector Circ Short to B	
P1215	17623	Cyl 3-Fuel Injector Circ Short to B	
P1216	17624	Cyl 4-Fuel Injector Circ Short to B	
P1225	17633	Cyl 1-Injector Circ Short to Ground	- Check fuel injectors ⇒ Page 01-72 , output Diagnostic Test Mode (DTM) and ⇒ Page 24-116
P1226	17634	Cyl 2-Injector Circ Short to Ground	
P1227	17635	Cyl 3-Injector Circ Short to Ground	
P1228	17636	Cyl 4-Injector Circ Short to Ground	
P1237	17645	Cyl 1-Injector Circ Open Circuit	- Check fuel injectors ⇒ Page 01-72 , output Diagnostic Test Mode (DTM) and ⇒ Page 24-116
P1238	17646	Cyl 2-Injector Circ Open Circuit	
P123	17647	Cyl 3-Injector Circ Open Circuit	
P1240	17648	Cyl 4-Injector Circ Open Circuit	

Diagnostic code (DTC)		Malfunction te t	Malfunction elimination
SAE	VAG		
P1300	17708	Misfire detected Reason Fuel level too low	- Fill vehicle fuel tank
P1340	17748	Camshaft/Crankshaft Pos Sens Signals Out of Se uence	- Check engine speed (RPM) sensor ⇒ Page 24-100
P1410	17818	Tank Ventilation Valve Short to B	- Check EVAP canister purge regulator valve ⇒ Page 01-72 , output Diagnostic Test Mode (DTM)
P1420	17828	Sec Air Inj Control Module Electrical Malfunction	- Check Secondary Air Injection (AIR) system ⇒ Page 01-72 , output Diagnostic Test Mode (DTM) and ⇒ *Repair Manual, 2.0 Liter 4-Cyl. 2V Engine Mechanical, Engine Code(s): ABA m.y. 1995 - 1997, Repair Group 26*
P1421	1782	Sec Air Inj Valve Circ Short to Ground	
P1422	17830	Sec Air Inj Sys Control Valve Circ Short to B	
P1425	17833	Tank Vent Valve Short to Ground	- Check EVAP canister purge regulator valve ⇒ Page 01-72 , output Diagnostic Test Mode (DTM)
P1426	17834	Tank Vent Valve Open	

Diagnostic code (DTC)		Malfunction te t	Malfunction elimination
SAE	VAG		
P1450	17858	Sec Air Inj Sys Circ Short to B	- Check Secondary Air Injection (AIR) pump relay -J2 - ⇒ Page 01-72 , output Diagnostic Test Mode (DTM) and ⇒ *Repair Manual, 2.0 Liter 4-Cyl. 2V Engine Mechanical, Engine Code(s): ABA m.y. 1995 - 1997, Repair Group 26*
P1451	1785	Sec Air Inj Sys Circ Short to Ground	
P1452	17860	Sec Air Inj Sys Open Circuit	
P1500	17 08	Fuel Pump Relay Circ Electrical Malfunction	- Check fuel pump relay ⇒ *Electrical Wiring Diagrams, Troubleshooting & Component Locations*
P1502	17 10	Fuel Pump Relay Circ Short to B	- Check fuel pump ⇒ *Repair Manual, 2.0 Liter 4-Cyl. 2V Engine Mechanical, Engine Code(s): ABA m.y. 1995 - 1997, Repair Group 20*

Diagnostic code (DTC)		Malfunction te t	Malfunction elimination
SAE	VAG		
P1543	17 51	Throttle Actuation Potentiometer Signal too Low	- Check throttle valve control module ⇒ Page 24-6
P1544	17 52	Throttle Actuation Potentiometer Signal too High	
P1565	17 73	Idle Speed Control Throttle Position Lower limit not attained	- Check throttle valve for damage/soiling - Check throttle valve control module ⇒ Page 24-6
P1580	17 88	Throttle Actuator (B1) Malfunction	
P1582	17 0	Idle Adaptation at Limit	- Check throttle valve control module ⇒ Page 24-6
			- Check intake air system for leaks ⇒ Page 24-125
			- Check exhaust system for leaks ⇒ *Repair Manual, 2.0 Liter 4-Cyl. 2V Engine Mechanical, Engine Code(s): ABA m.y. 1995 - 1997, Repair Group 26*
			- Check fuel pressure regulator ⇒ Page 24-121
			- Check EVAP canister purge regulator valve ⇒ Page 01-72 , output Diagnostic Test Mode (DTM)

Diagnostic code (DTC)		Malfunction te t	Malfunction elimination
SAE	VAG		
P1611	1801	MIL Call-up Circ /Transm Control Module Short to Ground	- Check wiring between Transmission Control Module (TCM) and ECM ⇒ *Electrical Wiring Diagrams, Troubleshooting & Component Locations*
P1613	18021	MIL Call-up Circ Open Short to B	- Check MIL LED ⇒ *Electrical Wiring Diagrams, Troubleshooting & Component Locations*
P1686	180 4	Contr nit Error Programming Error	- Replace control module ⇒ Page 24-1 , item 4

Diagnostic Trou le Code (DTC) memory, erasing (function 05)

Special tools, testers and au iliary items

- VAG 1551/1552 scan tool with VAG 1551/3 adapter cable

Test conditions

- Malfunctions eliminated
- Engine coolant temperature must reach at least 80 °C (176 °F)

Note:

If DTC memory is erased, the repair must be verified via the appropriate display group ⇒ *Page 01-35* .

- Connect VAG 1551/1552 scan tool and select Engine Electronics address word 01 ⇒ Page 01-7 Engine must be running at idle

Rapid data transfer **Select function**	**EL**	⮜	Indicated on display - Press buttons -0- and -2- to select Check DTC Memory function 02 and press - - button to confirm input
Rapid data transfer **Select function**	**EL**	⮜	- Press → button until all malfunctions still stored have appeared and display reads - Press buttons -0- and -5- to select Erase DTC Memory function 05 and press - - button to confirm input

Rapid data transfer **DTC memory is erased**	→	⮜	Indicated on display - Press → button
Rapid data transfer **Select function**	**EL**	⮜	Indicated on display - Allow engine to idle for at least 1 minute and check DTC memory again If no malfunction is displayed - Press buttons -0- and -6- to select End Output function 06 and press -- button to confirm input - Road test vehicle for at least 10 minutes **Road test procedure** • Engine coolant temperature must reach at least 80 °C (176 °F) - Briefly depress accelerator pedal to wide open throttle when engine speed is above 4600 RPM - Accelerate from approx 50 km/h (30 mph), for approx 4 seconds, using half throttle ♦ Automatic transmission Drive range 3 ♦ Manual transmission 4th gear - Check DTC memory again, no malfunctions should be shown - Create readiness code ⇒ Page 01-35

Readiness code, reading (function 15)

Special tools, testers and au iliary items

- VAG 1551/1552 scan tool with VAG 1551/3 adapter cable

or se uence

- Connect VAG 1551/1552 scan tool and, with ignition switched on, select Engine Electronics address word 01 ⇒ Page 01-7

Rapid data transfer **EL**

Select function

Indicated on display

- Press buttons -1- and -5- to select Readiness Code function 15 and press - - button to confirm input
  - Must appear on display when all diagnosis functions have been successfully completed

Readiness Code

00000000 - Test complete

Indicated on display

- Press → button
- Press buttons -0- and -6- to select End Output function 06 and press - - button to confirm input

Readiness Code

01101101 - Test not complete

Indicated on display (possible example)

If one of the diagnostic checks has not run through successfully

- Press → button

- Create readiness code ⇒ Page 01-35

- Read readiness code ⇒ Page 01-33 If DTC memory has been erased, repair must be verified via appropriate display group ⇒ Page 01-35 , Readiness code, creating

Rele ance of 8-digit num er loc for readiness code

The readiness code is created only when all display fields show 0								
1	2	3	4	5	6	7	8	Diagnostic function
							0	Three way catalytic converter
						0		Three way catalytic converter heating (not available)
					0			Fuel tank venting system
				0				Secondary air injection system
			0					Air conditioner (no diagnostic capability)
		0						Heated oxygen sensor
	0							Oxygen sensor heating
0								Exhaust gas recirculation system (not available)

Readiness code, creating

Special tools, testers and au iliary items

- VAG 1551/1552 scan tool with VAG 1551/3 adapter cable

Note:

- *During test sequence the ignition must not be switched off.*
- *If the specifications are obtained before the time specified in the table, you can proceed to the next work step.*
- *On vehicles up to m.y. 96 the function bits in the readiness code are set to 0 together, when the last diagnosis has been successfully completed.*
- *On vehicles from m.y. 97 the function bits in the readiness code are set to 0 individually, for each successfully completed diagnosis.*

Test se uence

WARNING!

When driving or riding in an airbag-equipped vehicle:

- ***Never hold test equipment in your hands or lap while the vehicle is in motion. Objects between you and the airbag can increase the risk of injury in an accident.***
- ***Secure tools or test equipment on passenger side floor where it can be safely read by the second technician.***

or step: 1

- Connect VAG 1551/1552 scan tool and select Engine Electronics address word 01 ⇒ Page 01-7

hen doing this, the ignition must be switched on

Rele ance of 8-digit num er loc in display field 4								
1	2	3	4	5	6	7	8	Diagnostic status
							1	Diagnostic Trouble Code (DTC) memory 1 Malfunction in system 0 o DTCs recognized
						1		ERROR bit(specific to display group being viewed) 1 Malfunction detected 0 o malfunction detected
					1			C CLE bit 1 Diagnosis complete 0 Diagnosis not performed yet
				1				ACTIVE bit1 Diagnosis active 0 Diagnosis inactive
			x					Function bit [1)]
		x						Function bit [1)]
	x							Function bit [1)]
x								Function bit [1)]

[1)] The relevance of the Function Bit varies depending upon the work step

Note:

- *There must not be any malfunctions stored in DTC memory or detected during this diagnostic test.*
- *If the CYCLE bit has a 1, the diagnosis is completed and the test sequence can be implemented.*
- *The specifications for the function bits must only be satisfied during the diagnostic phase (ACTIVE bit = 1).*
- *An "x" shown in the diagnostic status table means the display can show either "0" or "1".*

or step: 2

Rapid data transfer **Select function**	**EL**	⮜	Indicated on display - Press buttons -0- and -2- to select Check DTC Memory function 02 and press - - button to confirm input
DTC recogni ed	→	⮜	The number of malfunctions stored or o DTC recognized will be shown on the display - Locate and eliminate malfunctions printed out as per DTC table ⇒ Page 01-14 - Press → button

or step: 3

Rapid data transfer **Select function**	**EL**	⮜	Indicated on display - Press buttons -0- and -5- to select Erase DTC Memory function 05 and press - - button to confirm input
Rapid data transfer **DTC Memory is erased**	→	⮜	Indicated on display - Press → button

or step: 4

- Start engine and run at idle speed

or step: 5

Rapid data transfer **Select function**	**EL**	⮜	Indicated on display - Press buttons -0- and -8- to select Read Measuring Value Block function 08 and press - - button to confirm input
Read Measuring Value Bloc **Input display group num er**	**EL**	⮜	Indicated on display - Press buttons -1-, -0- and -3- to input display group 103 and press - - button to confirm input
Read Measuring Value Bloc **1 2 3 4**	**103** →	⮜	Indicated on display (1-4 display fields) - Increase engine speed to 3000-3500 RPM and check specifications after 60 seconds

	Display fields			
	1	2	3	4
Display group 103				
Display	xx xx ms	**. °C**	**. °C**	
Indicated	Engine load	**Engine coolant temperature**	**T ree way catalytic con erter temperature**	**Diagnosis conditions**
Specification	---	**At least 40 °C**	**At least 360 °C**	**1 00**
orking range	1 4 2 4 ms	-46 5 141 0 °C	0 0 °C	x ot relevant

Rele ance of 8 digit num er loc in display field 4								
1	2	3	4	5	6	7	8	Specifications of diagnosis conditions
		1						Oxygen Sensor (O2S) control active
						0		Diagnosis malfunction free
							0	DTC memory malfunction free

- Press → key

or step: 6

Diagnosis Secondary Air Injection (AIR) system

Test conditions

- Vehicle stationary, engine at idle

- Press buttons -0- and -4- to select Basic Setting function 04 and press - - button to confirm input

Basic Setting **EL** ⮜ Indicated on display

Input display group num er

- Press buttons -1-, -6- and -0- to input display group 160 and press - - button to confirm input

System in Basic Setting 160 → ⮜ Indicated on display (1-4 display fields)

1 2 3 4

- Start engine and run at idle speed and check specifications after 20 seconds

	Display fields			
	1	2	3	4
Display group160				
Display	**. °C**	**.**	**.**	xxxx xxxx
Indicated	**Engine coolant temperature**	**Secondary air injection al e open**	**Secondary air injection pump running**	Diagnosis conditions
Specification	**At least 60 °C**	**At least 0.7**	**At least 25**	xx11 x100
		Secondary air injection valve causes deviations in Oxygen Sensor (O2S) control	Secondary air injection valve causes deviations in O2S control	x ot relevant
orking range	-46 5 141 0 °C			

Rele ance of 8 digit num er loc in display field 4								
1	2	3	4	5	6	7	8	Specifications of diagnosis conditions
		1						Engine running at idling speed
			1					Vehicle stationary
					1			C CLE Bit Diagnosis completed
						0		Diagnosis malfunction free
							0	DTC memory malfunction free

- Press → button

or step: 7

Rapid data transfer **Select function**	**EL**	⮜	Indicated on display - Press buttons -0- and -8- to select Read Measuring Value Block function 08 and press - - button to confirm input
Read Measuring Value Bloc **Input display group num er**	**EL**	⮜	Indicated on display - Press buttons -1-, -0- and -3- to input display group 103 and press - - button to confirm input
Read Measuring Value Bloc **1 2 3 4**	**103** →	⮜	Indicated on display (1-4 display fields) - Increase engine speed to 2200-3300 RPM and check specifications after 120 seconds

	Display fields			
	1	2	3	4
Display group 103				
Display	xx xx ms	**. °C**	**. °C**	
Indicated	Engine load	**Engine coolant temperature**	**T ree way catalytic con erter temperature**	**Diagnosis conditions**
Specification		**At least 60 °C**	**At least 360 °C**	**1 00**
	---		---	x ot relevant
orking range	1 4 2 4 ms	-46 5 141 0 °C	0 0 °C	

Rele ance of 8 digit num er loc in display field 4								
1	2	3	4	5	6	7	8	Specifications of diagnosis conditions
		1						Oxygen sensor control active
						0		Diagnosis malfunction free
							0	DTC memory malfunction free

- Press → button

or step: 8

Diagnosis Oxygen Sensor (O2S) aging (regulating fre uency extended)

Rapid data transfer **EL**

Select function

Indicated on display

- Press buttons -0- and -4- to select Basic Setting function 04 and press - - button to confirm input

Basic Setting **EL**

Input display group num er

Indicated on display

- Press buttons -1-, -3- and -1- to input display group 131 and press - - button to confirm input

System in Basic Setting **131** →

1 2 3 4

Indicated on display (1-4 display fields)

- Run engine at idle speed for at least 5 seconds and check specifications

	Display fields			
	1	2	3	4
Display group 131				
Display	**rpm**	x xxx V	**ms**	
Indicated	**Engine speed**	Voltage of HO2S after three way catalytic converter	**O2S aging**	**Diagnosis conditions**
Specification	**800...880 rpm**	0 01 1 00 V fluctuating	**-1200...1200 ms**	**100**
	---		HO2S aging TV displacement by O2S control after three way catalytic converter	x ot relevant
orking range	800 6000 rpm	0 01 1 00 V	-1200 1200 ms	

Rele ance of 8 digit num er loc in display field 4								
1	2	3	4	5	6	7	8	Specifications of diagnosis conditions
					1			C CLE Bit Diagnosis completed
						0		Diagnosis malfunction free
							0	DTC memory malfunction free

- Press -C- button

or step: 9

Diagnosis Oxygen Sensor (O2S) adaptation in partial load range

Basic Setting **EL**

Input display group num er

Indicated on display

- Press buttons -1-, -2- and -5- to input display group 125 and press - - button to confirm input

System in Basic Setting **125** →

1 2 3 4

Indicated on display (1-4 display fields)

Note:

Avoid deceleration fuel cut-off during this diagnosis, as this causes the three way catalytic converter to store oxygen, and diagnosis will be blocked for at least 10 seconds.

- Test drive with the following special re uirements
  - Automatic transmission Drive range 2
  - Manual transmission 2nd gear
  - Engine speed must be kept between 2500-3500 RPM
- Continue test drive until all specifications are attained
- Check specifications during test drive (second technician necessary) See airbag warning ⇒ Page 01-35

	Display fields			
	1	2	3	4
Display group 125				
Display	**rpm**	**.**	x x	
Indicated	**Engine speed**	**O2S adaptation at part load**	O2S adaptation at idle	**Diagnosis conditions**
Specification	**2500...3500 rpm**	**-10...10**	-12 4 12 4	**01 1 100**
	Depending upon driving condition			x ot relevant
orking range	800 6000 rpm	-23 23	-12 4 12 4	

Rele ance of 8 digit num er loc in display field 4								
1	2	3	4	5	6	7	8	Specifications of diagnosis conditions
0								Reduced correction range active
	1							Part load adaptation active
			1					O2S control before three way catalytic converter active
					1			C CLE Bit Diagnosis completed
						0		Diagnosis malfunction free
							0	DTC memory malfunction free

or step: 10

Diagnosis Oxygen Sensor (O2S) adaptation in idle range

Test conditions

- Engine coolant temperature min 60 °C (140 °F) (⇒display group 001, display field 2)
- Intake air temperature max 80 °C (176 °F) (⇒display group 003, display field 4)

System in Basic Setting **125** →

1 2 3 4

Indicated on display (1-4 display fields)

- Run engine at idle speed and check specifications after 30 seconds

	Display fields			
	1	2	3	4
Display group 125				
Display	**rpm**	x x	**.**	
Indicated	**Engine speed**	Oxygen sensor adaptation at part load	**O ygen sensor adaptation at idle**	**Diagnosis conditions**
Specification	**800...880 rpm**	-23 23	**-12.4...12.4**	**01 1 100**
				x ot relevant
orking range	800 6000 rpm	-23 23	-12 4 12 4	

Rele ance of 8 digit num er loc in display field 4								
1	2	3	4	5	6	7	8	Specifications of diagnosis conditions
0								Reduced correction range active
	1							Part load adaptation active
			1					Oxygen sensor control before three way catalytic converter active
					1			C CLE Bit Diagnosis completed
						0		Diagnosis malfunction free
							0	DTC memory malfunction free

- Press -C- button

or step: 11

Diagnosis Oxygen Sensor (O2S) aging (regulating fre uency extended)

Test conditions

- Vehicle stationary

Basic Setting **EL**

Input display group num er

Indicated on display

- Press buttons -1-, -3- and -0- to input display group 130 and press - - button to confirm input

System in Basic Setting **130** →

1 2 3 4

Indicated on display (1-4 display fields)

- Increase engine speed to 2200-2800 RPM for 20 seconds and check specifications

	Display fields			
	1	2	3	4
Display group 130				
Display	**rpm**	**s**		
Indicated	**Engine speed**	**Seconds**	**eriod counter**	**Diagnosis conditions**
Specification	**2200...2800 rpm**	**0...2.8 s**	4	**1111 100**
		Period duration of O2S control before Three ay Catalytic Converter (T C)	Heated Oxygen Sensor (HO2S) periods recognised	
orking range	**800...6000 rpm**	**0.00...15.00 s**	**0...4**	**---**

Rele ance of 8 digit num er loc in display field 4								
1	2	3	4	5	6	7	8	Specifications of diagnosis conditions
1								Oxygen sensor control before T C active
	1							Speed/load range OK
		1						T C has its minimum temperature
			1					O2S heating before T C diagnosis comp
					1			C CLE Bit Diagnosis completed
						0		Diagnosis malfunction free
							0	DTC memory malfunction free

- Press -C- button

or step: 12

Diagnosis Three ay Catalytic Converter (T C)

Basic Setting **EL**

Input display group num er

Indicated on display

- Press buttons -1-, -3- and -6- to input display group 136 and press - - button to confirm input

System in Basic Setting **136** →

1 2 3 4

Indicated on display (1-4 display fields)

- Increase engine speed to 2700-3300 RPM and check specifications after 120 seconds

	Display fields			
	1	2	3	4
Display group 136				
Display	**rpm**	**. °C**	**.**	
Indicated	**Engine speed**	**T ree way catalytic con erter temp.**	**Amplitude ratio**	**Diagnosis conditions**
Specification	**2700...3300 rpm**	**At least 360 °C**	**ma . 0.3**	**1111 100**
				x ot relevant
orking range	800 6000 rpm	0 0 °C		

Rele ance of 8 digit num er loc in display field 4								
1	2	3	4	5	6	7	8	Specifications of diagnosis conditions
1								Oxygen Sensor (O2S) control before Three ay Catalytic Converter (T C) active
	1							T C has its minimum temperature
		1						Load range OK
			1					Heated Oxygen Sensor (HO2S) after T C operationally ready
					1			C CLE Bit Diagnosis completed
						0		Diagnosis malfunction free
							0	DTC memory malfunction free

- Press -C- button

or step: 14

Diagnosis Fuel tank venting system (EVAP canister purge regulator valve)

Test conditions

- Vehicle stationary
- Electrical consumers switched off (radiator coolant fan must not run during the check)
- Air conditioner switched off

Note:

The engine must be at idle during this diagnosis because the diagnosis will be interrupted.

Basic Setting **EL**

Input display group num er

Indicated on display

- Press buttons -1-, -5- and -0- to input display group 150 and press - - button to confirm input

System in Basic Setting **150** →

1 2 3 4

Indicated on display (1-4 display fields)

- Run engine for 30 seconds at idle speed and check specifications

	Display fields			
	1	2	3	4
Display group 150				
Display		**.**	**. g/s**	
Indicated	**Opening degrees**	**O ygen Sensor (O2S) control**	**Idling control**	**Diagnosis conditions**
Specification	**0...100**	**-7.8...-23 or 7.8...23 or at least 0.20 g/s**		**1110 100**
	Minimum opening of EVAP valve	O2S control deviations during diagnosis	O2S control deviations during diagnosis	x ot relevant
orking range	0 100	-25 25		

Rele ance of 8 digit num er loc in display field 4								
1	2	3	4	5	6	7	8	Specifications of diagnosis conditions
1								O2S control before three way catalytic converter active
	1							Idling
		1						Starting temperature warmer than -5 °C
			0					Altitude up to max 2600 m above sea level
					1			C CLE Bit Diagnosis completed
						0		Diagnosis malfunction free
							0	DTC memory malfunction free

- Press → button

or step: 14

- Read readiness code ⇒ Page 01-33

- If the readiness code is not OK, perform optional work steps 15 through 21 ⇒ Page 01-56

or step: 15

Diagnosis Vehicle Speed Sensor (VSS)

Rapid data transfer **Select function**	**EL**	⮜	Indicated on display - Press buttons -0- and -4- to select Basic Setting function 04 and press - - button to confirm input
Basic Setting **Input display group num er**	**EL**	⮜	Indicated on display - Press buttons -1-, -8- and -0- to input display group 180 and press - - button to confirm input
System in Basic Setting **1 2 3 4**	**180** →	⮜	Indicated on display (1-4 display fields) - Test drive according to the following special re uirements ♦ Select drive range 2 (automatic) or 2rd gear (manual) ♦ Engine speed above 3200 and 4000 RPM for 10 seconds then release accelerator pedal for 3 seconds • After 3 seconds, vehicle speed must still be at least 20 km/h (13 mph) and have been in deceleration fuel cut-off for a minimum of 2 secs

- Check specifications during test drive (second technician necessary) See airbag warning ⇒ Page 01-35

	Display fields			
	1	2	3	4
Display group 180				
Display	**rpm**	**. °C**	**m/**	
Indicated	**Engine speed**	**Coolant temperature**	**Ve icle speed**	**Diagnosis conditions**
Specification	**10 seconds etween 3200...4000 rpm**	**At least 80 °C**	**25...50 m/**	**111 100**
				x ot relevant
orking range	800 6000 rpm	-46 5 141 0 °C		

Rele ance of 8 digit num er loc in display field 4								
1	2	3	4	5	6	7	8	Specifications of diagnosis conditions
	1							Engine speed for this check is OK
		1						Coolant temperature OK
			1					Overrun cut-off is active
					1			C CLE Bit Diagnosis completed
						0		Diagnosis malfunction free
							0	DTC memory malfunction free

- Press -C- button

or step: 16

Diagnosis Knock Sensor (KS)

Test conditions

- Vehicle stationary

Basic Setting **EL**

Input display group num er

Indicated on display

- Press buttons -1-, -4- and -5- to input display group 145 and press - - button to confirm input

System in Basic Setting **145** →

1 2 3 4

Indicated on display (1-4 display fields)

- Increase engine speed to at least 2500 RPM and check specifications after 15 seconds

	Display fields			
	1	2	3	4
Display group 145				
Display	**rpm**			
Indicated	**Engine speed**	**noc Sensor (S) 1**	**iring open circuit counter**	**Diagnosis conditions**
Specification	**At least 2500 rpm**	**ma . 7**	**0**	**1100**
		Amplification factor of knock sensor signal	iring open circuit diagnosed	x ot relevant
orking range	800 6000 rpm			

Rele ance of 8 digit num er loc in display field 4								
1	2	3	4	5	6	7	8	Specifications of diagnosis conditions
				1				Knock sensor diagnosis is active
					1			C CLE Bit Diagnosis completed
						0		Diagnosis malfunction free
							0	DTC memory malfunction free

- Press Cbutton

or step: 17

Diagnosis Heated Oxygen Sensor (HO2S)
(before three way catalytic converter)

Basic Setting **EL** ⮜ Indicated on display

Input display group num er

- Press buttons -1-, -1- and -5- to input display group 115 and press - - button to confirm input

System in Basic Setting **115** → ⮜ Indicated on display (1-4 display fields)

1 2 3 4

- Increase engine speed to 2200-2800 RPM and check the specifications

	Display fields			
	1	2	3	4
Display group 115				
Display	**. °C**	**. °C**	**. V**	
Indicated	**Engine coolant temperature**	**T ree way catalytic con erter temperature**	**eated O ygen Sensor (O2S) oltage efore t ree way catalytic con erter**	**Diagnosis conditions**
Specification	**At least 60 °C**	**Appro . 360 °C**	**Fluctuating**	**1011 100**
		---	---	x ot relevant
orking range	-46 5 141 0 °C	0 0 °C	0 1 0 V	

Rele ance of 8 digit num er loc in display field 4								
1	2	3	4	5	6	7	8	Specifications of diagnosis conditions
1								HO2S before Three ay Catalytic Converter (T C) is switched on
	0							HO2S is operationally warm
		1						HO2S before T C is operationally ready
			1					Oxygen sensor control before T C is active
					1			C CLE Bit Diagnosis completed
						0		Diagnosis malfunction free
							0	DTC memory malfunction free

- Press key 3 ((V A G 1551) or key ↑ (V A G 1552)

or step: 18

Diagnosis Heated Oxygen Sensor (HO2S) after three way catalytic converter

System in Basic Setting **116** →

1 2 3 4

Indicated on display (1-4 display fields)

- Increase engine speed to 2200-2800 RPM and check specifications after 15 seconds

	Display fields			
	1	2	3	4
Display group 116				
Display	**ms**	**. °C**	**. V**	
Indicated	**Switc ing time delay of eated O ygen Sensor (O2S) after t ree way catalytic con erter**	**T ree way catalytic con erter temperature**	**O2S oltage after t ree way catalytic con erter**	**Diagnosis conditions**
Specification	**Appro . 1200 ms**	**At least 360 °C**	**At least 0.6 V**	**1011 00**
		---	---	x ot relevant
orking range		0 0 °C	0 1 0 V	

Rele ance of 8 digit num er loc in display field 4								
1	2	3	4	5	6	7	8	Specifications of diagnosis conditions
1								Oxygen sensor heating after Three ay Catalytic Converter (T C) is switched on
	0							HO2S is operationally warm
		1						HO2S after T C operationally ready
			1					Oxygen sensor control before T C is active
					1			C CLE Bit Diagnosis completed

- Press → button

or step: 19

Diagnosis Oxygen Sensor (O2S) heating (before and after three way catalytic converter)

Basic Setting **EL**

Input display group num er

Indicated on display

- Press buttons -1-, -2- and -0- to input display group 120 and press - - button to confirm input

System in Basic Setting **120** →

1 2 3 4

Indicated on display (1-4 display fields)

- Increase engine speed to 2200-2800 RPM and check the specifications

	Display fields			
	1	2	3	4
Display group 120				
Display	**. °C**	**s**	**. Ω**	
Indicated	**T C temp.**	**Seconds**	**Resistance**	**Diagnosis conditions**
Specification	**At least 360 °C**	**Appro . 151 s**	**5.9...24.2 Ω**	**1111 100**
		Time between O2S heating switches on and begin of diagnosis	Resistance of O2S heating before three way catalytic converter	x ot relevant
orking range	0 0 °C	0 0 500 s	0 0 65 0 Ω	

Rele ance of 8 digit num er loc in display field 4								
1	2	3	4	5	6	7	8	Specifications of diagnosis conditions
1								O2S heating before T C switched on
	1							Heated Oxygen Sensor (HO2S) before T C vaporization point exceeded
		1						HO2S before T C operationally ready
			1					O2S heating beforeT C operationally ready
					1			C CLE Bit Diagnosis completed
						0		Diagnosis malfunction free
							0	DTC memory malfunction free

- Press -3- button ((VAG 1551 scan tool) or button ↑ (VAG 1552)

System in Basic Setting **121** →

1 2 3 4

Indicated on display (1-4 display fields)

- Increase engine speed to 2200-2800 RPM and check specifications

	Display fields			
	1	2	3	4
Display group 121				
Display	**. °C**	**s**	**. Ω**	
Indicated	**T ree way catalytic con erter temperature**	**Seconds**	**Resistance**	**Diagnosis conditions**
Specification	**At least 360 °C**	**Appro . 151 s**	**5.9...24.2 Ω**	**1111 100**
		Time between O2S heating switches on and beginning of diagnosis	Resistance of O2S heating after three way catalytic converter	x ot relevant
orking range	0 0 °C	0 0 500 s	0 0 65 0 Ω	

Rele ance of 8 digit num er loc in display field 4								
1	2	3	4	5	6	7	8	Specifications of diagnosis conditions
1								O2S heating after T C switched on
	1							O2S after T C vaporization point exceeded
		1						HO2S after T C operationally ready
			1					O2S heating after T C operationally ready
					1			C CLE Bit Diagnosis completed
						0		Diagnosis malfunction free
							0	DTC memory malfunction free

- Press -C- button

or step: 20

Diagnosis Throttle valve control module

Note:

There are no specifications for this diagnosis. The values in the display fields are typical for this diagnosis. If other values are shown it does not indicate a system malfunction. The diagnostic functions run in the background during the check.

- Press buttons -1-, -4- and -0- to input display group 140 and press - - button to confirm input

System in Basic Setting **140** → ⮜

1 2 3 4

Indicated on display (1-4 display fields)

- Run engine at idle speed and check specifications

	Display fields			
	1	2	3	4
Display group 140				
Display	**. ms**		**. V**	
Indicated	**Engine load**	**Idle actuator position**	**T rottle al e potentiometer oltage**	**Diagnosis conditions**
Specification	**1.4...2.4 ms**	**65...85**	**3.0...4.0 V**	**---**

- Run engine at idling speed
- Press -3- button ((VAG 1551) or button ↑ (VAG 1552)

System in Basic Setting 141 →

1 2 3 4

Indicated on display (1-4 display fields)

- Run engine at idle speed

	Display fields			
	1	2	3	4
Display group 141				
Display				
Indicated	**T rottle al e actuator**	**T rottle al e actuator**	**T rottle al e actuator**	**Diagnosis conditions**
Specification	**65...85**	**65...85**	**90...170**	**---**
	Actual position of throttle valve actuator	Throttle valve actuator specification	Throttle valve actuator integrator	

- Press -3- button ((VAG 1551 scan tool) or button ↑ (VAG 1552 scan tool)

System in Basic Setting 142 →

1 2 3 4

Indicated on display (1-4 display fields)

- Run engine at idle speed

	Display fields			
	1	2	3	4
Display group 142				
Display	.	.	.	
Indicated	**T rottle al e actuator**	**T rottle al e actuator**	**T rottle al e actuator**	**Diagnosis conditions**
Specification	**65...85**	**80...90**	**20...30**	**---**
	Throttle valve actuator emergency running cross section	Throttle valve actuator minimum stop	Throttle valve actuator maximum stop	

- Press → button

or step: 21

- Read readiness code ⇒ Page 01-33

- Press buttons -0- and -6- to select End Output function 06 and press - - button to confirm input

Output Diagnostic Test Mode (DTM) (function 03)

The output Diagnostic Test Mode (DTM) actuates the following components in the stated se uence

1 - Cylinder 1 fuel injector - 30-

2 - Cylinder 2 fuel injector - 31-

3 - Cylinder 3 fuel injector - 32-

4 - Cylinder 4 fuel injector - 33-

5 - Evaporative Emission (EVAP) canister purge regulator valve - 80-

6 - Secondary Air Injection (AIR) solenoid valve - 112-

7 - Secondary Air Injection (AIR) pump relay - J2 -

8 - Evaporative Emission (EVAP) canister purge solenoid valve - 115-

Special tools, testers and au iliary items

- VAG 1551/1552 scan tool with VAG 1551/3 adapter cable
- VAG 15 8/18 test box
- Connector test kit V 15 4
- VAG 1527B voltage tester

Test conditions

- Throttle Position (TP) sensor -G6 - OK
- Fuse 18 OK

Test se uence

- Connect VAG 1551/1552 scan tool and with ignition switched on, select Engine Electronics address word 01 ⇒ Page 01-7

Rapid data transfer **EL**
Select function

Indicated on display

- Operate VAG 1551/1552 scan tool taking into account information on display
- Press buttons -0- and -3- to select Output Diagnostic Test Mode function 03

Rapid data transfer
03 - Output Diagnostic Test Mode

Indicated on display

To activate cylinder 1 fuel injector - 30-

- Press - - button to confirm input

Output Diagnostic Test Mode (DTM) →
Cylinder 1 fuel injector - 30

Indicated on display

- Open throttle fully and close again
  - Cylinder 1 fuel injector must click

Note:

All fuel injectors click extremely quietly!

To activate fuel injectors for cylinders 2-4, in each case

- Open throttle fully again and close

Skipping individual tests

- Press → button

If one or more fuel injectors do not click

- Continue output Diagnostic Test Mode (DTM) to the end
- Switch ignition off
- Check fuel pump relay
- Checking fuel injector actuation (resistance and current supply) ⇒ Page 24-116 , checking fuel injectors

To activate Evaporative Emission (EVAP) canister purge regulator valve - 80-

- Press → button

Output Diagnostic Test Mode (DTM) →

EVA canister purge regulator al e - 80-

Indicated on display

- The EVAP canister purge regulator valve must click until the next component is activated by pressing the → button

- Disconnect hose off purge regulator valve (from EVAP canister)
- Connect auxiliary hose

- During output DTM blow into auxiliary hose (
  direction of throttle housing)

  - Valve must open and close

If the purge regulator valve does not open and close

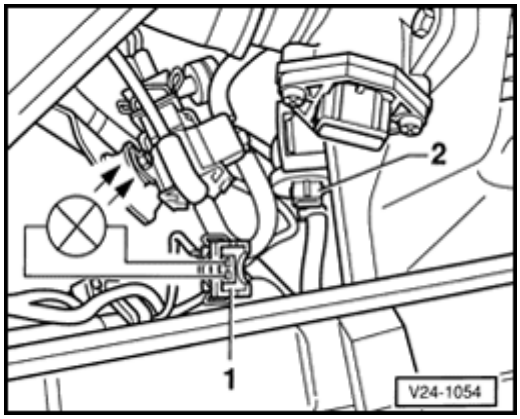

- Disconnect 2-pin connector from valve and connect VAG 1527B voltage tester with test leads from V 15 4

  - LED must flash

If LED flashes

- Replace EVAP canister purge regulator valv

If LED does not flash

- Switch ignition off

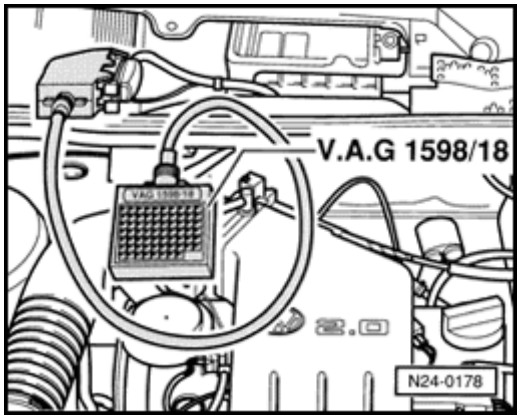

- Connect VAG 15 8/18 test box to Engine Control Module (ECM) wiring harness (arrow
- Check wiring between test box and 2-pin connector for open circuit according to wiring diagram

  Terminal 1 and test box socket 31

  Resistance max 1 5 ohms (Ω)

- Check wiring between 2-pin connector terminal 2 and central electrical panel for open circuit according to wiring diagram

  Resistance max 1 5 ohms (Ω)

- Check wiring between ECM connector and 2-pin connector terminal 1 for short circuit to terminal 2 and to vehicle Ground (G D), according to wiring diagram

  Terminal 2 and test box socket 31

  Specification ∞ ohms (Ω)

- Additionally check wiring for short circuit to positive (B)

  Specification ∞ ohms (Ω)

If no malfunction in wiring is detected

- Reconnect EVAP canister purge regulator valve connector

- Replace ECM -J220-

- Press → button

To activate Secondary Air Injection (AIR) solenoid valve - 112-

Output Diagnostic Test Mode (DTM) →

Secondary AIR solenoid al e- 112

Indicated on display

- Press → key
  - Secondary air injection solenoid valve must remain activated until the next component is activated by pressing the → key

If secondary air injection solenoid valve does not switch

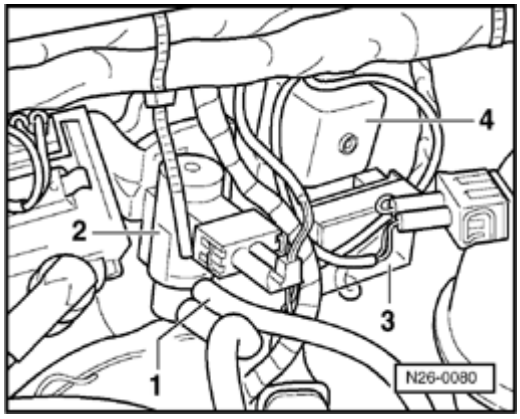

- Disconnect 2-pin connector from Secondary Air Injection (AIR) solenoid valve - 112- -2-
- Connect VAG 1527B voltage tester to 2-pin connector using test leads from V 15 4
  - LED must light up

If LED lights up (voltage supply OK)

- Replace Secondary Air Injection (AIR) solenoid valve - 112-

If LED does not light up

- Switch ignition off

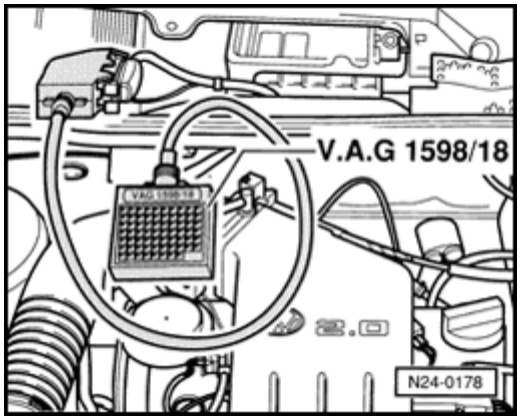

- Connect VAG 15 8/18 test box to ECM wiring harness
- Check wiring between test box and 2-pin connector terminal 2 for open circuit according to wiring diagram

  Terminal 2 and test box socket 50

  Resistance Max 1 5 ohms (Ω)
- Check wire between 2-pin connector terminal 1 and central electrical panel for open circuit according to wiring diagram

  Resistance Max 1 5 ohms (Ω)

- Check wiring between ECM connector and 2-pin connector terminal 1 for short circuit to terminal 2 and to vehicle Ground (G D), according to wiring diagram

  Terminal 1 and test box socket 50

  Specification ∞ ohms (Ω)

- Additionally, check wiring for short circuit to battery positive (B)

  Specification ∞ ohms (Ω)

If no malfunction in wiring is detected

- Reconnect secondary air injection solenoid valve

- Replace ECM -J220-

To activate Secondary Air Injection (AIR) pump relay -J2 -

- Press → key

Output Diagnostic Test Mode (DTM) →

Secondary air injection pump relay - 299

Indicated on display

- The Secondary Air Injection (AIR) pump relay -J2 - must activate the Secondary Air Injection pump motor -V101-

If the secondary air injection pump motor does not run

- Disconnect 2-pin connector from Secondary Air Injection (AIR) pump motor -V101-

- Connect VAG 1527B voltage tester to 2-pin connector using test leads from V 15 4

  - LED must light up

IF LED lights up (voltage supply OK)

- Replace Secondary Air Injection (AIR) pump motor -V101-

If LED does not light up

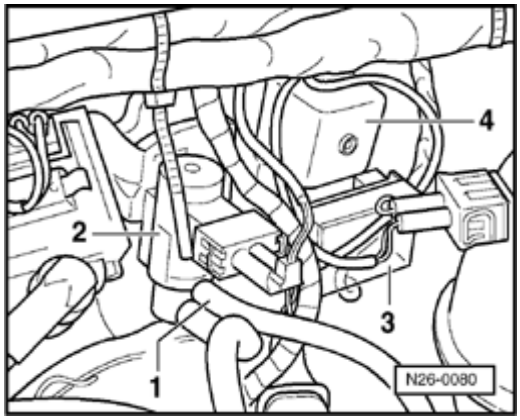

- Check fuse -3- on secondary air injection pu relay

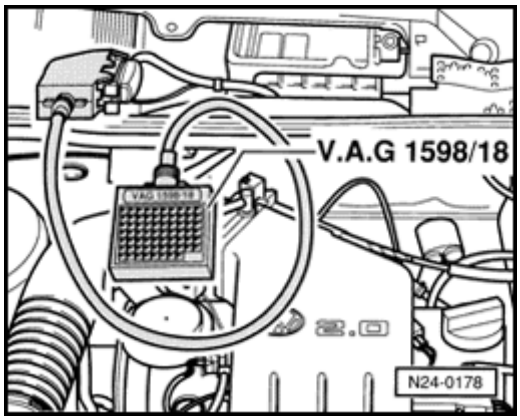

- Connect VAG 15 8/18 test box to ECM wirir harness
- Check wiring between test box socket 4 an Secondary Air Injection (AIR) pump relay -J2 for open circuit according to wiring diagram

  Resistance max 1 5 Ω
- Check Secondary Air Injection (AIR) pump r -J2 -

⇒ *Electrical Wiring Diagrams, Troubleshooting Component Locations*

- Check wiring to Secondary Air Injection (AIR pump motor -V101- according to wiring diag

- Press → key

Output Diagnostic Test Mode (DTM) →

EVA canister purge solenoid al e- 115

Indicated on display

Disregard display

- Press → key

Rapid data transfer EL

Select function

Indicated on display

- Press buttons -0- and -6- to select End Output function 06 and press - - button to confirm input

Note:

The secondary air injection pump continues to run until 06 is entered for the "End Output" function.

- Switch ignition off

Measuring alue loc , reading (function 08)

Note:

To change to another display group proceed as follows:

Display group	VAG 1551 scan tool	VAG 1552 scan tool
Higher	Press -3- button	Press ↑ button
Lower	Press -1- button	Press ↓ button
Skip	Press -C- button	Press -C- button

Test conditions

- Control module in Read measuring value block function 08
- Vehicle stationary, engine idling
- Engine oil temperature min 80 °C (176 °F)
- Electrical consumers switched off (radiator coolant fan must not run during the check)
- Air conditioner switched off

Display group o er iew

Display group 000 (decimal displayed alue)												
• Engine running at idle speed, control module in Read Measuring Value Block												
Display fields											**Specification**	**Corresponds to**
1	2	3	4	5	6	7	8		10	Partial load adaptation value for Oxygen Sensor (O2S) control (before three way catalytic converter)	118 - 138	-7 to 7
										Idle adaptation value for O2S control (before T C)	241 - 255 or 0 - 14	-10 to 10
										O2S control	6 - 160	-5 to 5
										Mass air flow adaptation value at idle	112 - 144	-5 to 5 kg/h
										Idle control (idle mass air flow)	112 - 144	-5 to 5 kg/h
										Throttle valve angle	0 - 23	0 to 10 ∠°
										Battery voltage	176 - 212	12 0 to 14 0 V
										Engine speed	80 - 88	800 to 880 RPM
										Engine load	28 - 58	1 4 to 2 4 ms
										Engine coolant temperature	170 - 204	80 to 108 °C

- If any one specification is not attained ⇒ Page 01-83 , evaluating display group 000

- For additional steps see repair procedures

Note:

- *Press → button to end "Read Measuring Value Block".*

- *After terminating "Read Measuring Value Block", press buttons -0- and -6- to input "End Output" function 06 and press -Q- button to confirm input.*

E aluating display group 000

Display field: 1	ossi le malfunction cause	Malfunction elimination
More than 204	♦ Engine Coolant Temperature (ECT) sensor	- Check ECT sensor ⇒ Page 24-8
Less than 170	♦ Engine coolant temperature sensor ♦ Thermostat faulty (open)	- Check thermostat ⇒ *Repair Manual, 2.0 Liter 4-Cyl. 2V Engine Mechanical, Engine Code(s): ABA m.y. 1995 - 1997, Repair Group 19*
Display field: 2	**ossi le malfunction cause**	**Malfunction elimination**
More than 58	♦ Electrical consumers switched on ♦ Oxygen Sensor (O2S) control at limit	- Switch off electrical consumers - Check Heated Oxygen Sensor (HO2S) and O2S control (before three way catalytic converter) ⇒ Page 24-26 - Check O2S aging (before three way catalytic converter) ⇒ Page 24-57
Less than 28	♦ nmetered outside air ♦ Fuel pressure regulator faulty and/or hose fallen off	- Check intake air system for leaks ⇒ Page 24-125 - Check fuel pressure regulator ⇒ Page 24-121

Display field: 3	ossi le malfunction cause	Malfunction elimination
Less than 80	♦ Driving range selected ♦ Throttle valve control module faulty	- Selector lever in P or position - Check throttle valve control module ⇒ Page 24-6
More than 88	♦ Closed throttle position switch open ♦ Throttle valve control module faulty ♦ nmetered outside air	- Check throttle valve control module ⇒ Page 24-6 - Check intake air system for leaks ⇒ Page 24-125
Display field: 4	**ossi le malfunction cause**	**Malfunction elimination**
Less than 176	♦ Generator faulty ♦ Battery discharged/faulty	- Check Engine Control Module (ECM) voltage supply ⇒ Page 24-106 - Check generator - Check battery
More than 212	♦ Voltage regulator faulty	- Check voltage regulator
Display field: 5	**ossi le malfunction cause**	**Malfunction elimination**
Less than 0	♦ ot possible	-
More than 23	♦ Basic setting of throttle valve control module has not been performed ♦ Throttle valve control module faulty ♦ Accelerator pedal cable adjustment	- Perform basic setting ⇒ Page 24-86 - Check throttle valve control module ⇒ Page 24-6 - Adjust accelerator pedal cable ⇒ *Repair Manual, 2.0 Liter 4-Cyl. 2V Engine Mechanical, Engine Code(s): ABA m.y. 1995 - 1997, Repair Group 20*

Display field: 6 7	ossi le malfunction cause	Malfunction elimination
Less than 112	♦ nmetered air after throttle valve	- Check intake air system for leaks ⇒ Page 24-125
More than 144	♦ Increased engine load	- Switch off consumer
Display field: 8	**ossi le malfunction cause**	**Malfunction elimination**
Less than 6	♦ Engine too rich, O2S control weakens mixture ♦ O2S control at limit ♦ Lots of fuel from EVAP canister ♦ Fuel pressure regulator faulty/hose fallen off	- Check HO2S and O2S control (before three way catalytic converter ⇒ Page 24-26) - Check fuel pressure regulator ⇒ Page 24-121
More than 160	♦ Engine too lean, O2S control enriches mixture ♦ nmetered air ♦ Fuel injectors faulty ♦ O2S control at limit ♦ Secondary Air Injection (AIR) system	- Check HO2S and O2S control (before three way catalytic converter) ⇒ Page 24-26 - Check intake air system for leaks ⇒ Page 24-125 - Check fuel injectors ⇒ Page 24-116 - Check Secondary air injection system ⇒ Page 01-72 , output Diagnostic Test Mode (DTM) and ⇒ *Repair Manual, 2.0 Liter 4-Cyl. 2V Engine Mechanical, Engine Code(s): ABA m.y. 1995 - 1997, Repair Group 26*
128	♦ Shortage of fuel ♦ O2S control blocked	- Check amount of fuel in tank - Check HO2S and O2S control (before three way catalytic converter) ⇒ Page 24-26

Display field: 9	ossi le malfunction cause	Malfunction elimination
Less than 241 or more than 14	♦ ⇒ Page 24-30 , evaluating display group 025	
Display field: 10	**ossi le malfunction cause**	**Malfunction elimination**
Less than 118 or more than 138	♦ ⇒ Page 24-30 , evaluating display group 025	

VAG 1551 Scan Tool (ST), connecting and selecting "CARB/OBD II" address worc 33

Special tools, testers and au iliary items

- VAG 1551/1552 scan tool with VAG 1551/3 adapter cable

Test conditions

- Fuses 15, 18 and 22 OK

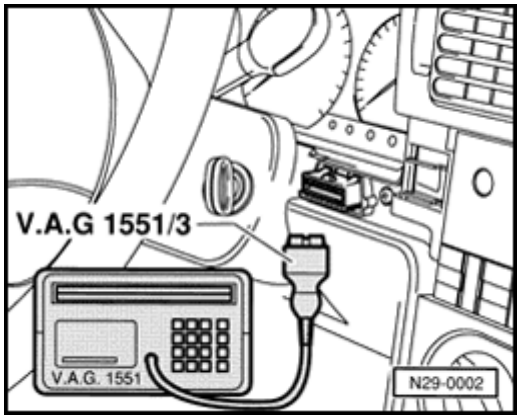

- Open cover for Data Link Connector (DLC)
- Connect VAG 1551/1552 scan tool with VAG 1551/3 adapter cable

Depending on desired function

- Switch ignition on, or start engine

Operate VAG 1551/1552 scan tool taking into account the information on the display

Selecta le functions for address word "33 CARB / OBDII"

- Press -1- button to select Rapid data transfe operating mode 1
- Press -3- button twice to select CARB / OBI address word 33

Rapid data transfer

33 - OBD II

Display will appear as shown

- Press button to confirm input

OBD II Scan Tool

Select mode 1.. 2.. 3.. 4.. 5.. 6.. 7..

Display will appear as shown

The following modes can be selected

Mode 1	Current data ⇒ Page 01-8
Mode 2	Freeze frame data ⇒ Page 01-8 or ⇒ Page 01-0
Mode 3	DTC memory ⇒ Page 01-
Mode 4	Clear DTC memory ⇒ Page 01-100
Mode 5	Oxygen sensor signal ⇒ Page 01-101
Mode 6	Transfer measured values Measured values that are not being monitoring will be output
Mode 7	Interrogate DTC memory Malfunctions which have not switched O the MIL can be interrogated

Note:

When a mode is selected, the control module replies with a 4 on the display in front of the mode selected. Example: mode 2 will be indicated in the display with mode 42.

Current data, mode 1

In mode 1 the current diagnostic data can be interrogated Additionally the readiness code can be displayed (PID1 display field 4)

Breakdown of parameter identification (PID) ⇒ Page 01- 0 diagnostic data

The On Board Diagnostic (OBD) program can be used to check whether individual parameters correspond to actual engine condition

- Press -1- button to select mode 1 current data

Mode 41 ID Module 10 →

diagnostic data

Display will appear as shown

Module 10 or 1A will be displayed alternately when

- Module 10 Engine Control Module (ECM) -J220-, or
- Module 1A Transmission Control Module (TCM) -J217- have the same parameter identifications (PID)

Example Engine Coolant Temperature is measured at the ECM and ATF at the TCM

Diagnostic data must be individually interrogated via the → button Press the Print button to obtain a printout

The MIL is said to be switched O when the engine is not idling, and only the ignition is switched O

Diagnostic data

Rele ance of figures in 8 digit num er loc

Mode 41 ID 1 Module 10 → ⮜ Display will appear as shown

00000000

Display positions 2...8 indicate num er of DTCs stored									
Display positions									**Specification**
1	2	3	4	5	6	7	8	umber of DTCs stored	0
MIL switched off [1]									0

[1] hen diagnostic data only is displayed, the specification 1

Rele ance of figures in 8 digit num er loc

Mode 41 ID 1 Module 10 → ⮜ Display will appear as shown

00000111

Display positions 1 to 5 are not re uired									
Display positions									**Specification**
1	2	3	4	5	6	7	8	Component monitoring	1
						Fuel system monitoring			1
					Misfire recognition				1
									0

Rele ance of figures in 8 digit num er loc

Mode 41 ID 1 Module 10 → ⮜ Display will appear as shown

01101101

If specification is 0, t e diagnostic capa ility is not recogni ed y ECM.									
If specification is 1, t e diagnostic capa ility is recogni ed y ECM.									
Display fields									**Specification**
1	2	3	4	5	6	7	8	Three way catalytic converter	1
								Three way catalytic converter heating (not available)	0
								Fuel tank venting system	1
								Secondary air injection (AIR) system	1
								A/C (no diagnosiscapability)	0
								Heated Oxygen Sensor (HO2S)	1
								Oxygen Sensor (O2S) heating	1
								Exhaust Gas Recirculation (EGR) system (not available)	0

Mode 41 ID 1 Module 10 → <

00000000

Display will appear as shown

If the specification is not obtained in display field 4 and a 1 is displayed, then the appropriate diagnostic se uence has not yet been performed The readiness code must still be created ⇒ Page 01-35

Rele ance of figures in 8 digit num er loc

If specification is 0, t e diagnostic program for t e readiness code as een completed.									
Display fields									**Specification**
1	2	3	4	5	6	7	8	Three way catalytic converter	0
								Three way catalytic converter heating (not available)	0
								Fuel tank venting system	0
								Secondary air injection system	0
								A/C (no diagnosis currently)	0
								Heated oxygen sensor	0
								Oxygen sensor heating	0
								Exhaust Gas Recirculation (EGR) system (not available)	0

- Press → button to display any additional diagnostic data

Mode 41 ID 3 Module 10 →

Fuel System 1

PID3 Fuel injection system status

hen the 3rd position from the right is 1, the injection status is recognized as available

- Press → button

Mode 41 ID 4 Module 10 →

Calculated load alue 2

PID4 Calculated load value

Specification at idle approx 2

- Press → button

Mode 41 ID 5 Module 10 →

Engine Coolant Temp. °C

PID5 Engine coolant temperature °C

Indicates the current engine coolant temperature

Specification for engine at normal operating temperature 80 to 105 °C (176 ° to 221 °F)

- Press → button

Mode 41 ID 5 Module 1A →

Coolant temp. °C

PID5 Coolant temperature °C

Indicates the current ATF temperature

hen the ATF specification is above 140 °C (284 °F) with engine at normal operating temperature, 80 °-105 °C (176 °-221 °F) a DTC will be stored

- Press → button

Mode 41 ID 6 Module 10 →

S ort Term Fuel Trim Ban 1

PID6 Short Term Fuel Trim, Bank 1

The oxygen sensor control integrator in is displayed here

- Press → button

Mode 41 ID 7 Module 10 →

Long Term Fuel Trim Ban 1

PID7 Long Term Fuel Trim, Bank 1

The adaptation increases the value in depending upon altitude

- Press → button

Mode 41 ID 12 Module 10 →

Engine speed **rpm**

PID12 Engine speed (RPM)

The engine speed (RPM) is displayed here

- Press → button

Mode 41 ID 12 Module 1A →

Speed **rpm**

PID12 Engine speed (RPM)

The input speed (RPM) from transmission is displayed here

- Press → button

Mode 41 ID 13 Module 1A →

Speed **m/**

PID13 Vehicle speed (mph)

Current vehicle speed display

- Press → button

Mode 41 ID 13 Module 10 →

Speed **m/**

PID13 Vehicle speed (mph)

Current vehicle speed display

- Press → button

Mode 41 ID 14 Module 10 →

Ignition Timing Ad ance **12 °**

PID14 Ignition angle °

Specification at idle 12 ° fluctuating

If the displayed ignition angle is constant and later than 12 °, then the cause can be a faulty knock sensor

- Press → button

Mode 41 ID 15 Module 10 →

Inta e Air Temp. **° C**

PID15 Intake air temperature °C

Measured at idle, slightly above ambient temperature

- Press → button

Mode 41 ID 16 Module 10 →

Air Flow Rate 4.30 g/sec

PID16 Mass air flow g/sec

Measured at idle approx 4 3 g/sec

If the value is below 2 5 g/sec unmetered (outside) air can be the cause

- Press → button

Mode 41 ID 17 Module 10 →

T rottle Val e osition 3

PID17 Throttle valve position

Specification at idle 2-4

A too large or small a value leads to DTC P1582

- Press → button

Mode 41 ID 18 Module 10 →

Command Secondary Air 1

PID18 Secondary air injection status

hen the 3rd position from right is 1, the secondary air injection system is recognized as available

- Press → button

Mode 41 ID 19 Module 10 →

O ygen Sensor Location 11

PID1 Location / heated oxygen sensor

hen the 1st and the 2nd position from right is 1, the heated oxygen sensors are recognized as available

- Press → button

Mode 41 ID 20 Module 10 →

Ban 1 Sensor 1 0.445 V

PID20 Heated oxygen sensor 1
0 445 V x

- The displayed value in volts must fluctuate between 0 and 1 0 volts

- Press → button

Mode 41 ID 21 Module 10 →

Ban 1 Sensor 2 0.445 V

PID21 Heated oxygen sensor 2
0 445 V x

- The displayed value in volts must fluctuate between 0 and 1 0 volt, however it must be at a slower rate than the HO2S (before three way catalytic converter)

- Press -C- button to exit mode 1

Free e frame data, mode 2

Note:

If a malfunction that illuminates the MIL is detected by the Engine Control Module (ECM) and is then stored, simultaneously, the operating conditions existing at the time the malfunction was stored will also be stored, and can be interrogated via mode 2.

Breakdown of the (PID) identification parameters ⇒ *Page 01-90* *diagnostic data.*

- Press -2- button to select mode 2 freeze frame data

Mode 42 0 ID 0 Module 10 →

Free e Frame Data

Display will appear as shown

- Press → button

Module 10 or 1A will be activated (alternately)

- ♦ Module 10 Engine Control Module (ECM) -J220-
- ♦ Module 1A Transmission Control Module (TCM) -J217-
- Press → button, and the operating conditions will be printed out as a block, assuming there is a DTC stored in DTC memory
- Mode 2 can be exited by pressing the -C- button

DTC memory, mode 3

- Press -3- button to select mode 3 DTC memory

Malfunction recogni ed

Module 10 →

MIL off Module 1A

Display will appear as shown

Module 10 or 1A will be activated (alternately)

- Module 10 Engine Control Module (ECM) -J220-
- Module 1A Transmission Control Module (TCM) -J217-
- MIL OFF / O MIL switched OFF or O

- Press → button, any stored DTCs will be displayed in se uence

0422

Display will appear as shown (example)

- Press → button

Note:

- *If two or more DTCs are stored, the cause of the malfunction could be attributed to the second or following malfunction. Interpreting stored DTCs ⇒ Page 01-14 , DTC table.*
- *After malfunctions have been repaired; clear DTC memory ⇒ Page 01-100 and create the readiness code again ⇒ Page 01-35 .*

- Press -C- button to exit mode 3

Clear DTC memory, mode 4

- Start engine and let idle Press -4- button to select mode 4 clear DTC memory

Note:

DTC codes (if any are stored) must first be read before they can be cleared. Pressing -4- button will not clear the data in DTC memory immediately. In case of operator error, the control module will respond:

OBD II Scan Tool

Cleared DTC Memory

Display will appear as shown

By pressing the -C- button mode 4 will be exited

OBD II Scan Tool

Select mode 1.. 2.. 3.. 4.. 5.. 6.. 7..

Display will appear as shown

By pressing the - - button DTC memory will be cleared

Mode 44 Module 10

DTC Memory is cleared

Display will appear as shown

Note:

When the -Q- button is pressed it can cause the engine to run irregularly until mode 4 is exited.

- Press -C- button to exit mode 4

After repairing malfunctions and clearing DTC memory, the readiness code must be created ⇒ Page 01-35 Then the readiness code must be interrogated via mode 41 transfer of diagnostic data ⇒ Page 01- 0

O ygen sensor signal (B1-S1), mode 5

Note:

When a Heated Oxygen Sensor (HO2S) malfunction is stored, use mode 5 to check the HO2S signal output, to see whether the HO2S before three way catalytic converter is within specification, or whether another malfunction is present, e.g. the HO2S after three way catalytic converter is causing an O2S control malfunction.

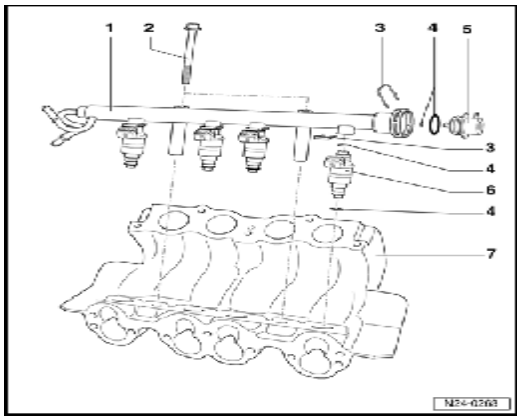

The points 01 to 0 represent

01 - Rich/lean threshold voltage (constant value)

02 - Lean/rich threshold voltage (constant value)

03 - Lower voltage for calculating switching period

04 - pper voltage for calculating switching period

05 - Calculated rich/lean switching time

06 - Calculated lean/rich switching time

07 - Minimum test voltage

08 - Maximum test voltage

0 - Time between threshold voltages

- Press -5- button to select mode 5 oxygen sensor signal (B1-S1)

Mode 45 Test ID 1 Module 10 →

B1-S1 **0.445V**

Display will appear as shown Test ID 01

Rich/lean threshold voltage constant value 0 445 volts

- Press → button

Mode 45 Test ID 2 Module 10 →

B1-S1 **0.445V**

Display will appear as shown Test ID 02

- Lean/rich threshold voltage constant value 0 445 volts
- If constant value is not obtained, the HO2S is faulty

- Press → button

For the following HO2S signals three values are always displayed

1st value	Minimum value
2nd value	Actual value
3rd value	Maximum value

Note:

The displayed Min. and Max. values are constant and do not change. The actual value is displayed as a constant. It will only change when during the test the HO2S supplies a greater or smaller signal.

Mode 45 Test ID 7 Module 10 →

B1-S1 0.148V . V **0.40V**

Display will appear as shown Test ID 07

- Minimum test voltage
- If the actual value is below 0 148 volts, there is a short circuit to ground
- hen the actual value exceeds 0 4 volts, the malfunction could be the HO2S is not at working temperature, sensor heating is faulty, wiring open circuit to HO2S or a short circuit to positive (B)

- Press → button

Mode 45 Test ID 8 Module 10 →

B1-S1 0.598V . V 1.078V

Display will appear as shown Test ID 08

- Maximum test voltage
- If the actual value is above 1 078 volts, there is a short circuit to positive (B) in the wire to HO2S
- If the actual value is below 0 5 8 volts, the malfunction could be a HO2S not reaching proper operating temperature, faulty O2S heating or an open circuit in the HO2S wiring

- Press → button

Mode 45 Test ID 9 Module 10 →

B1-S1 0.04s . s 1.20s

Display will appear as shown Test ID 0

- The display shows the time between the threshold voltages
- If the actual value is below the minimum time of 0 04 seconds, there is a short circuit
- If the actual value exceeds the maximum time of 1 20 seconds, the malfunction could be due to an aged, lazy or contaminated oxygen sensor

- Press -C- button to exit program se uence

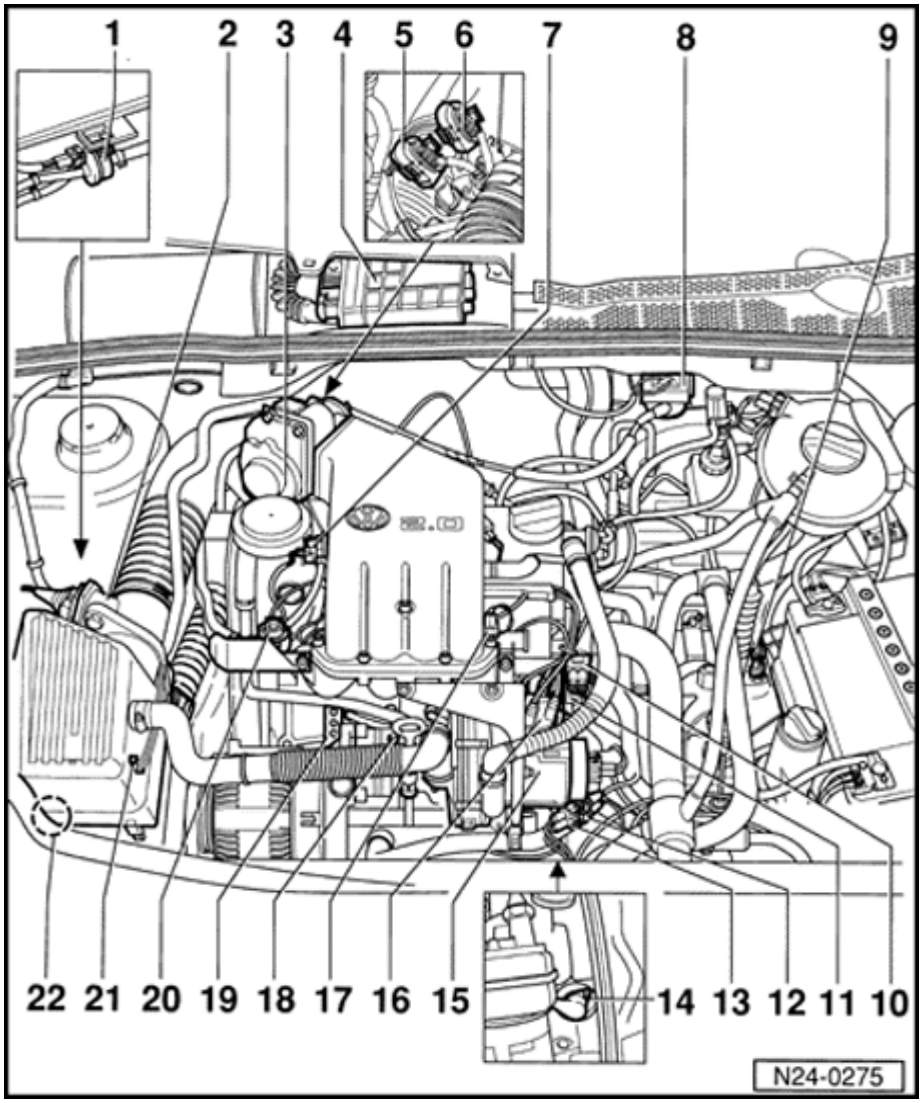

Multiport fuel injection and ignition system

Component locations, o er iew

1 - E aporati e Emission (EVA) canister purge regulator al e - 80-

- EVAP system

⇒ *Repair Manual, 2.0 Liter 4-Cyl. 2V Engine Mechanical, Engine Code(s): ABA m.y. 1995 - 1997, Repair Group 20*

2 - Mass Air Flow (MAF) sensor - G70-

3 - T rottle al e control module - 338-

4 - Engine Control Module

(ECM) - 220-

5 - Connector

- Brown, 4-pin
- For Heated Oxygen Sensor (HO2S) 2 -G108-and Oxygen Sensor (O2S) heating (after three way catalytic converter) installation position Three ay Catalytic Converter (T C)

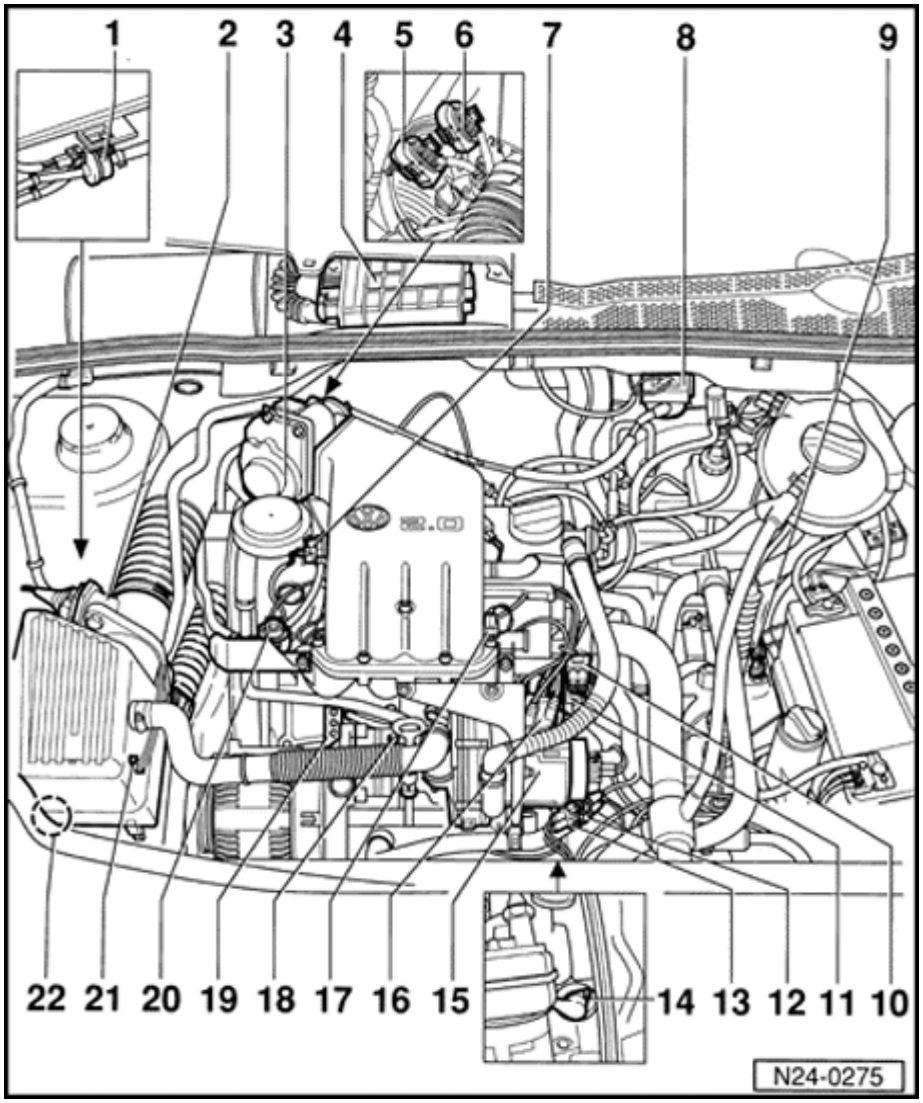

6 - Connector

- Black, 4-pin
- For Heated Oxygen Sensor (HO2S) - G3 - and Oxygen Sensor (O2S) heating (before three way catalytic converter)
- Location front exhaust pipe

7 - Inta e Air Temperature (IAT) sensor -G72-

8 - Ignition coil - 152-

- ⇒ Page 28-3 , item 17

9 Speedometer - Ve icle Speed Sensor (VSS) -G22-

10 Engine - Coolant Temperature (ECT) sensor - G62-

- Black, with Engine Coolant Temperature (ECT) sensor -G2-

11 - Center connector

12 - 3-pin connector

- For knock sensor
- Blue

13 - 3-pin connector

- For engine speed sensor

14 - Engine speed (R M) sensor - G28-

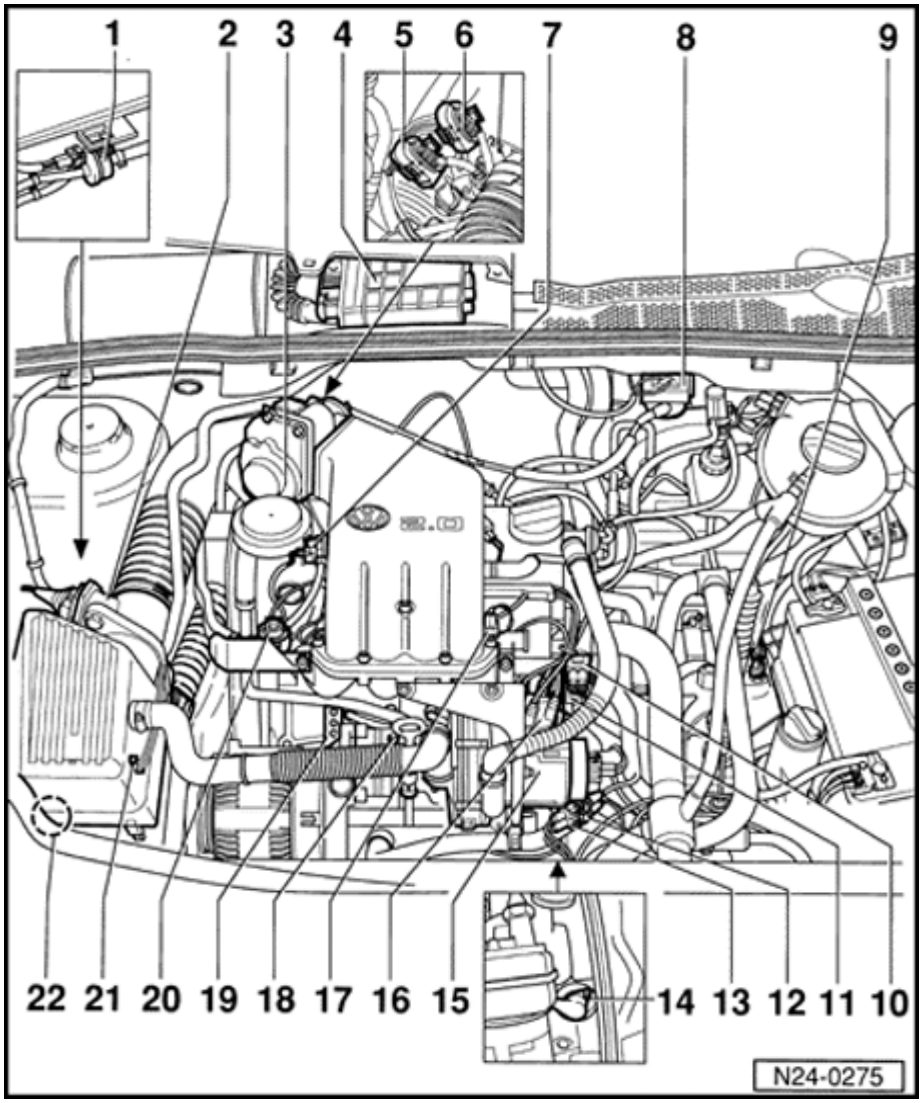

15 - Secondary Air Injection (AIR) pump motor - V101-

⇒ *Repair Manual, 2.0 Liter 4-Cyl. 2V Engine Mechanical, Engine Code(s): ABA m.y. 1995 - 1997, Repair Group 26*

16 - Distri utor

- ith Camshaft Position (CMP) sensor - G40- ⇒ Page 28-3

17 - Fuel injectors

- Cylinder 1 - 30-
- Cylinder 2 - 31-
- Cylinder 3 - 32-
- Cylinder 4 - 33-

18 - noc Sensor (S) 1 - G61-

- ⇒ Page 28-3 ,

item 10

19 - Ground (G D) connection

20 - Fuel pressure regulator

21 - Temperature regulator T ermal Vacuum Val e (TVV)

- For intake air preheating

22 - EVA canister

- Below air cleaner
- EVAP system

⇒ *Repair Manual, 2.0 Liter 4-Cyl. 2V Engine Mechanical, Engine Code(s): ABA m.y. 1995 - 1997, Repair Group 20*

General information

Fuel injection system, ser icing

- Ignition system, servicing ⇒ Repair Group 28

Note:

- *Fuel hoses in engine compartment must be secured with spring type clips. The use of clamp or screw type clips is not permissible.*

- *The control module for the fuel injection and ignition system is equipped with a Diagnostic Trouble Code (DTC) memory. Before carrying out repairs, adjustment work and troubleshooting the DTC memory must be checked and the vacuum connections checked (outside air).*

- *Components marked with an asterisk (*) are checked via the On Board Diagnostic (OBD) program ⇒ Page 01-12 checking DTC memory.*

- *Components marked with two asterisks (**) are checked via the output Diagnostic Test Mode (DTM) ⇒ Page 01-72 .*

- *For trouble-free operation of the electrical components, a voltage of at least 11.5 volts is necessary.*

- *Do not use sealants containing silicone. Traces of silicone drawn into the engine are not consumed and will damage the oxygen sensor.*

- *Do not spray anything in the area of the oxygen sensor connectors. To function correctly oxygen sensors require reference air, which they receive via the connector. If contact spray gets into the oxygen sensor via this path it will lead to*

damage/malfunctions.

- *During some checks it can happen that the ECM will recognize and store a malfunction. Therefore after completing all checks and repairs the DTC memory must be checked and if necessary erased* ⇒ *Page 01-12* *, checking DTC memory.*

- Safety precautions ⇒ Page 24-1

- Rules for cleanliness ⇒ Page 24-21

- Technical data ⇒ Page 24-22

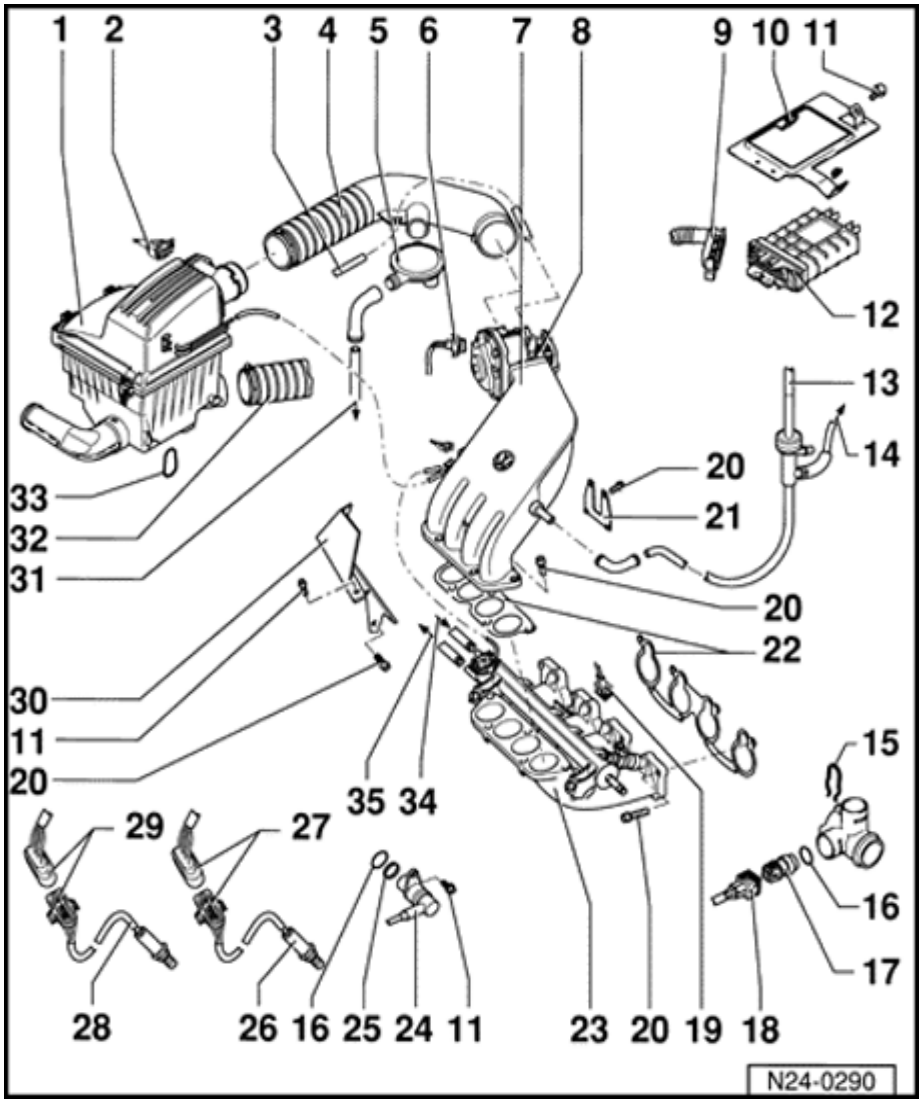

Fuel injection system, components

1 - Air Cleaner (ACL)

- Disassembling and assembling ⇒ Page 24-16

2 - Connector

- 4-pin
- Mass Air Flow (MAF) sensor - G70-

3 - E aporati e Emission (EVA) canister purge regulator al e - 80- /

- EVAP system

⇒ *Repair Manual, 2.0 Liter 4-Cyl. 2V Engine Mechanical, Engine Code(s): ABA m.y. 1995 - 1997, Repair Group 20*

4 - Inta e air duct

5 - ositi e Cran case Ventilation

(CV)
al e

6 - Connector

- 8-pin
- For throttle valve control module - J338-

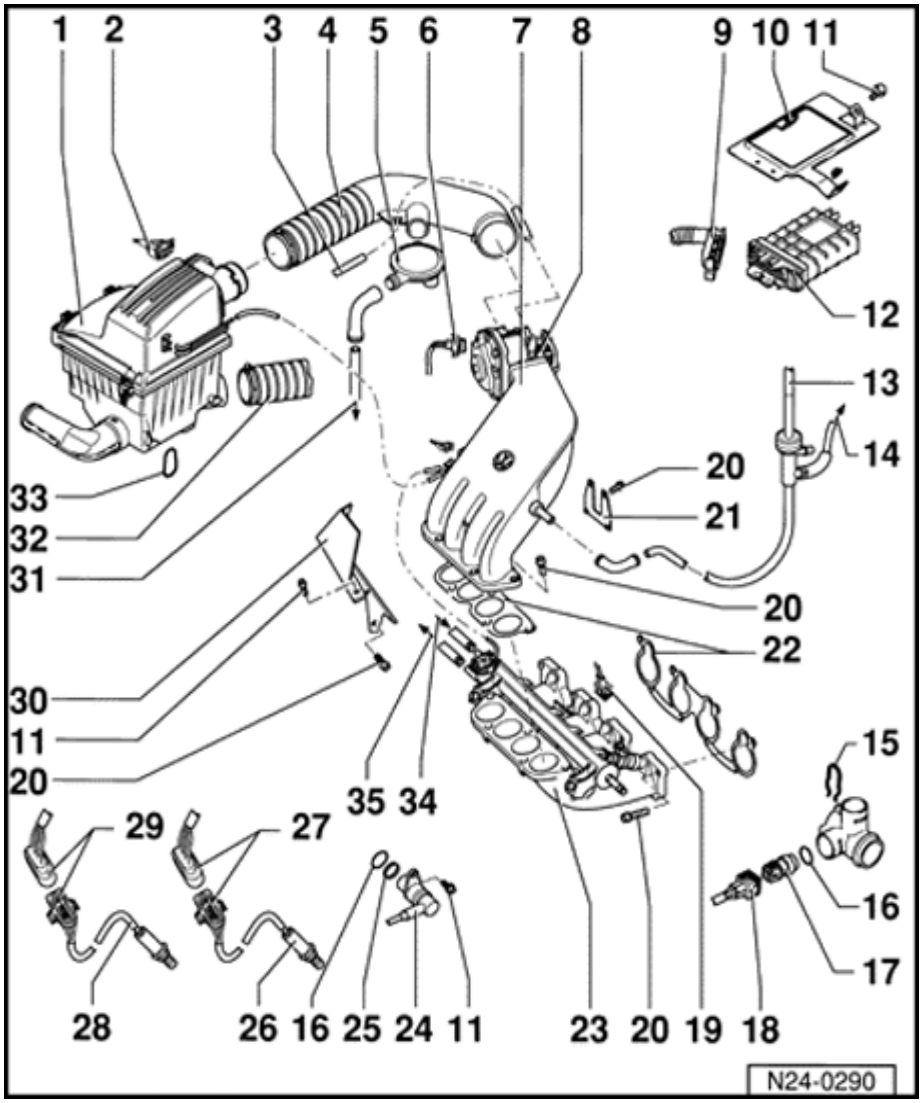

7 - Inta e manifold, upper

- First tighten to lower intake manifold and then to both rear supports - 21 - ⇒ Page 24-

- Disassembling and assembling ⇒ Page 24-16

8 - T rottle al e control module - 338-

- If replaced initiate basic setting ⇒ Page 24-86

9 - Connector

- 68-pin
- Only disconnect or connect with ignition switched off

10 - Mounting

plate

- For Engine Control Module (ECM) - J220-

11 - 10 m (7 ft l)

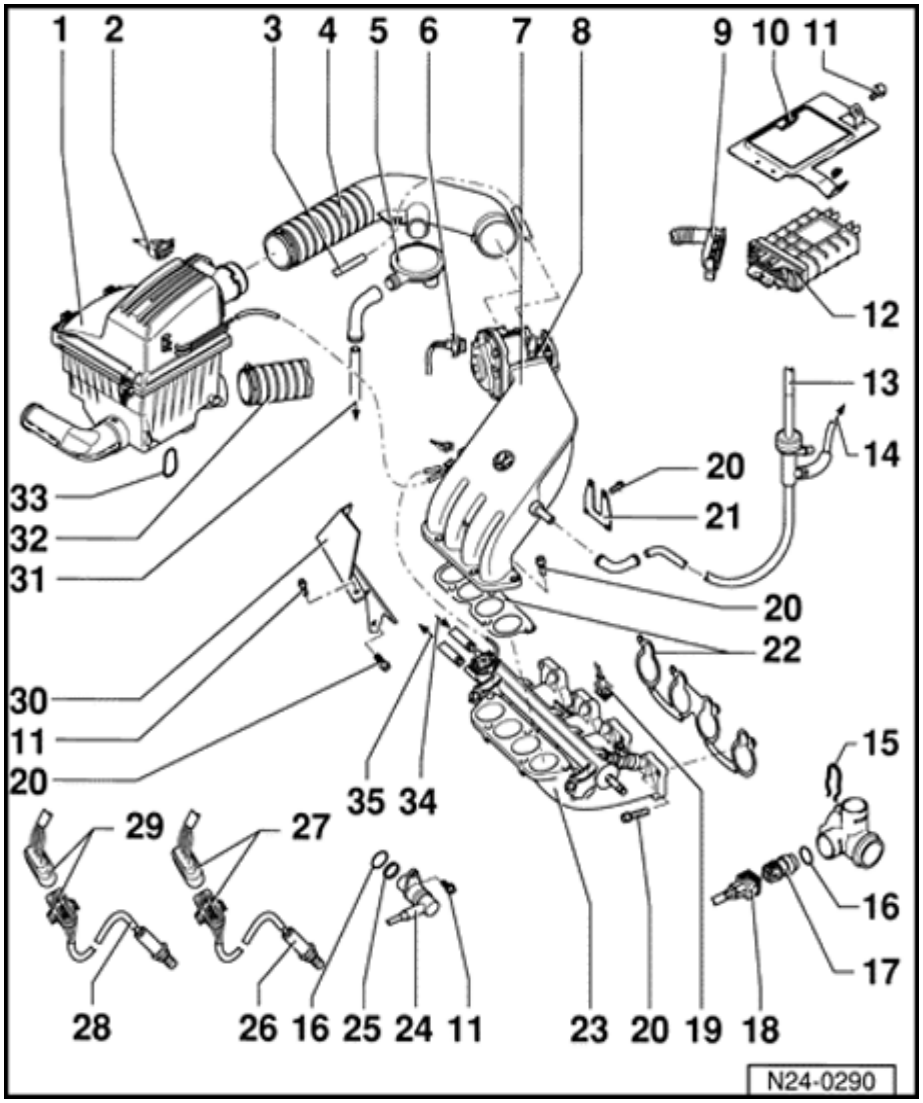

12 - Engine Control Module (ECM) - 220-

- Location in plenum chamber, right side
- For fuel injection system, Oxygen Sensor (O2S) control, Evaporative Emission (EVAP) canister purge regulator valve, speed governing via fuel pump relay, idle speed control, ignition and On Board Diagnostic (OBD)
  - Check ECM coding ⇒ Page 01-10
  - If replaced initiate basic setting ⇒

Page 24-86

13 - To ra e ooster

14 - To A/C

15 - Retaining clip

- Check seated securely

16 - O-ring

- Replace if damaged

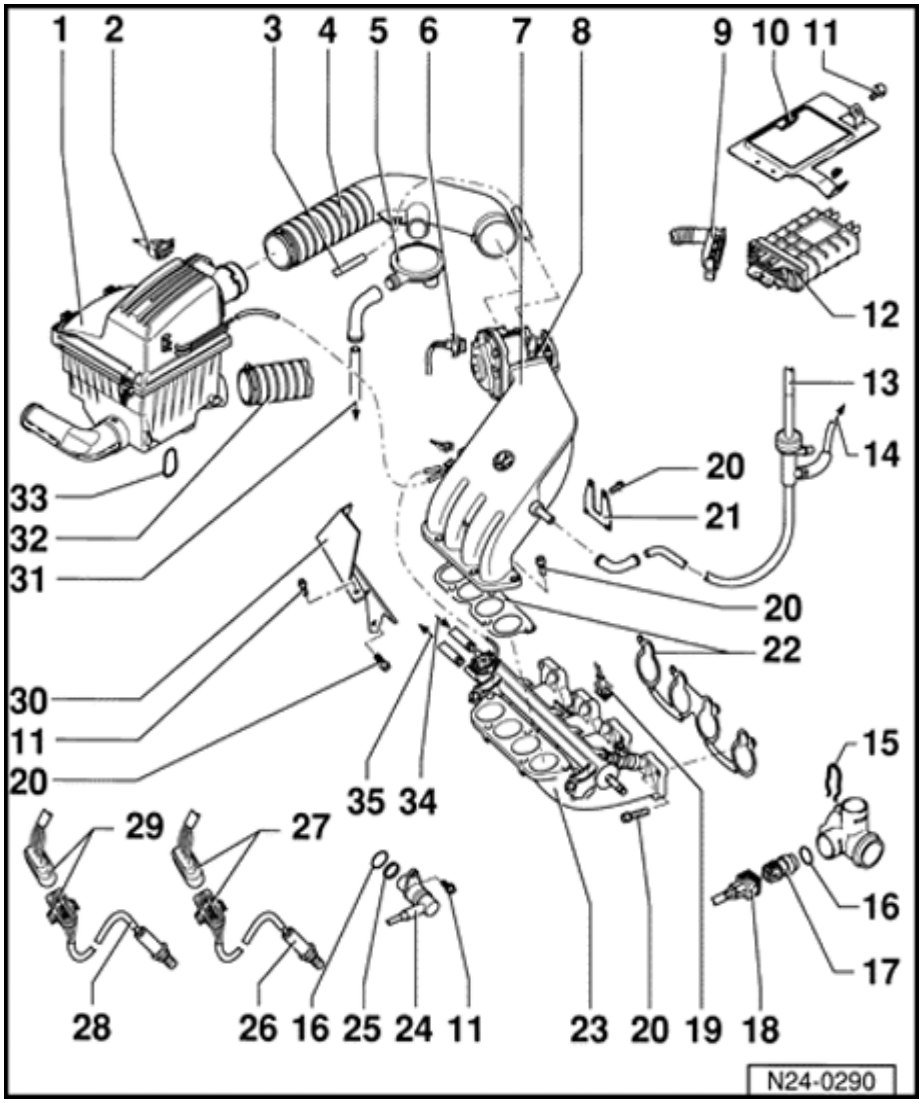

17 Engine - Coolant Temperature (ECT) sensor - G62-

- Black, Engine Coolant Temperature (ECT) sensor -G2-
  - Input to fuel injection system
  - Checking ⇒ Page 24-8
  - If necessary before removing, release pressure from cooling system

18 - Connector

- 4-pin
- Terminals 1 and 3 for -G62-

19 - Connector

20 - 20 m (15 ft l)

21 - Support

- Between intake

manifold upper section and cylinder head

22 - Gas et

- Always replace

23 - Inta e manifold, lower

- Disassembling and assembling ⇒ Page 24-15

24 - Engine speed (R M) sensor - G28-

25 - Spacer ring

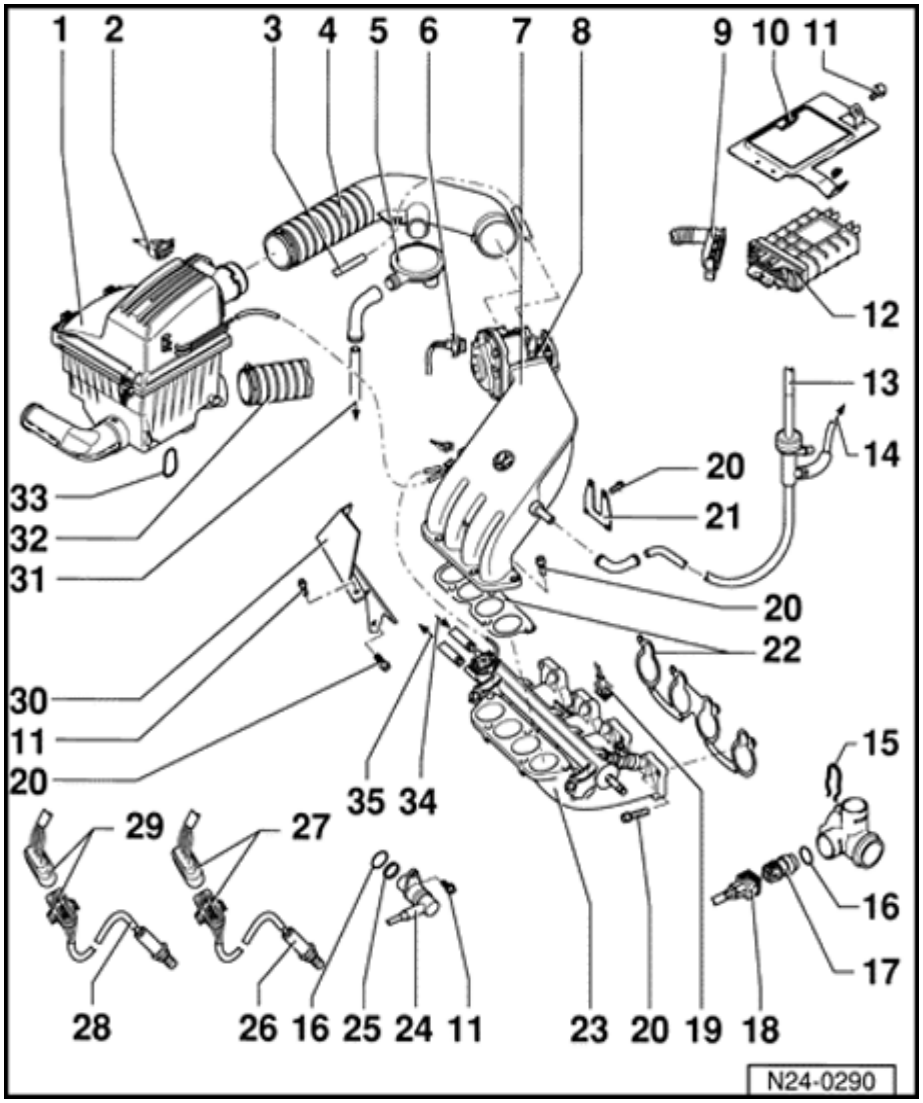

26 - eated O ygen Sensor (O2S) 2 - G108-

- 50 m (37 ft lb)
- Installation position Three ay Catalytic Converter (T C)
- Grease only threads with Part o G 052 112 A3 hot bolt paste (anti-seize compound) Grease must not get into slots of sensor body
- Checking HO2S 2 and O2S control ⇒ Page 24-43
- O2S heating voltage supply via fuel pump relay - J17-

- Checking O2S heating ⇒ Page 24-50

CAUTION!

Part numbers are for reference only. Always check with your Parts Dept. for the latest parts information.

27 - Connector

- Brown, 4-pin
- For HO2S 2 -G108- and O2S heating (after three way catalytic converter)
- Secured to rear engine mount

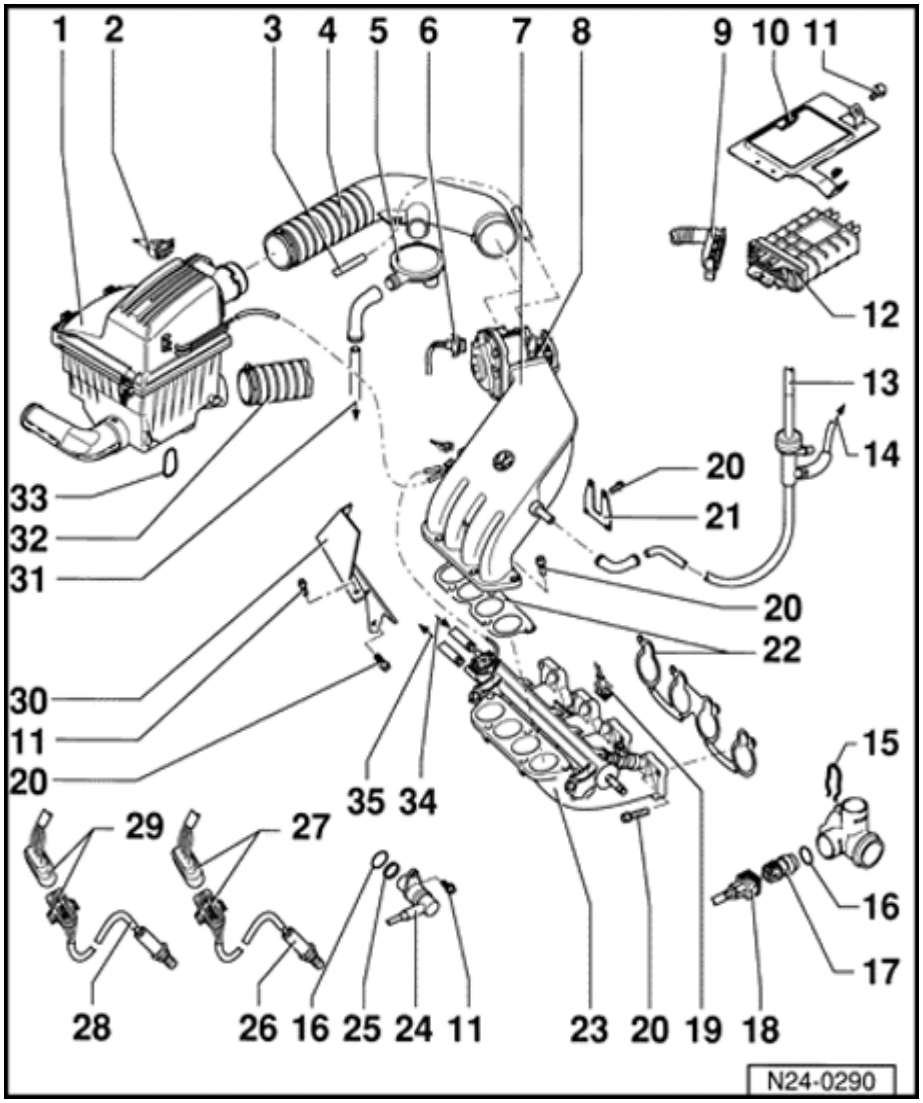

28 - eated O ygen Sensor (O2S) -G39-

- 50 m (37 ft lb)
- Installation position before Three ay Catalytic Converter (T C)

- Grease only threads with Part o G 052 112 A3 hot bolt paste (anti-seizecompound) Grease must not get into slots of sensor body
  - Checking HO2S and oxygen sensor control ⇒ Page 24-26
  - O2S heating voltage supply via fuel pump relay -J17-
  - Checking O2S heating ⇒ Page 24-36

CAUTION!

Part numbers are for reference only. Always check with your Parts Dept. for the latest parts information.

29 - Connector

- Black, 4-pin
- For HO2S and oxygen sensor heating (before three way catalytic converter)
- Secured to rear engine mount

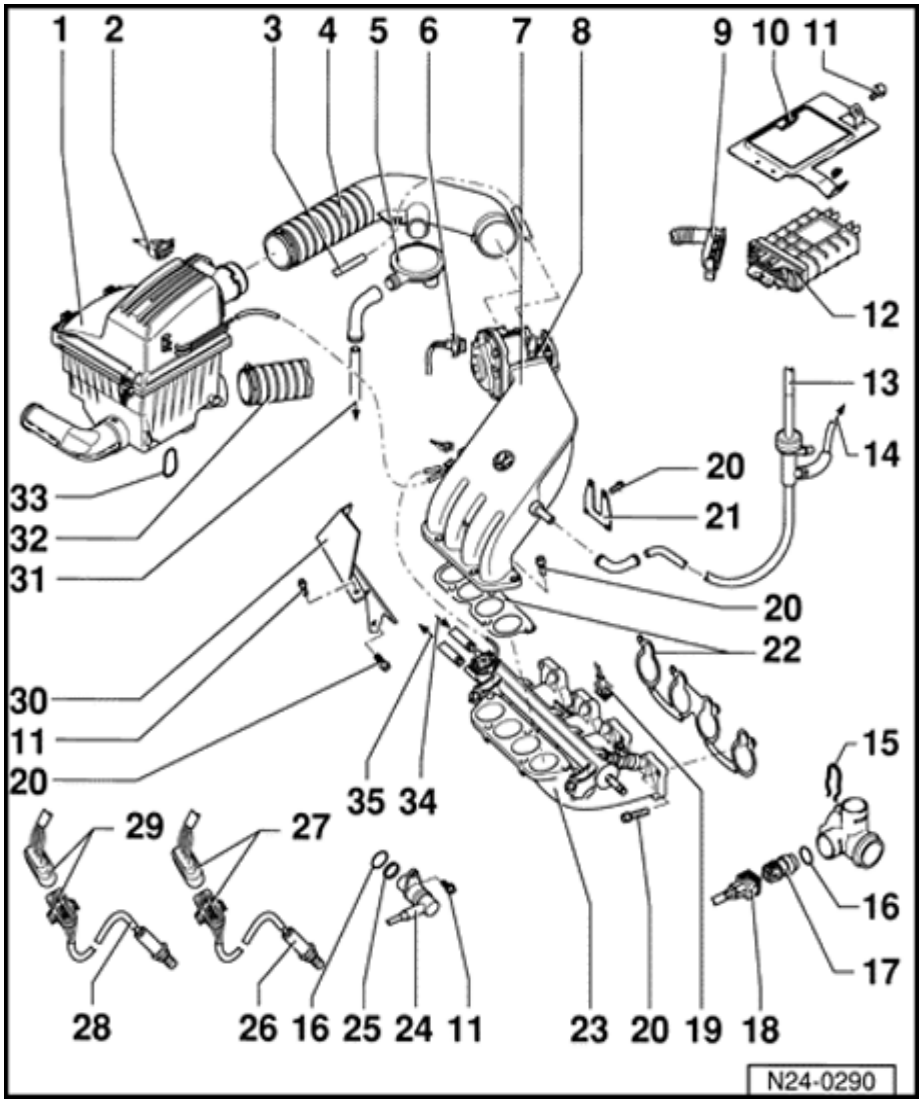

30 - Deflector

31 - To cran case

32 - ose

- To warm air deflector plate on exhaust manifold

⇒ *Repair Manual, 2.0 Liter 4-Cyl. 2V Engine Mechanical, Engine Code(s): ABA m.y. 1995 - 1997, Repair Group 26*

33 - Retaining ring

34 - Supply line

- hite arrow
- Secure with spring-type clips
- From fuel delivery unit in fuel tank

35 - Return line

- Blue arrow
- Secure with spring-

type clips

- To fuel tank

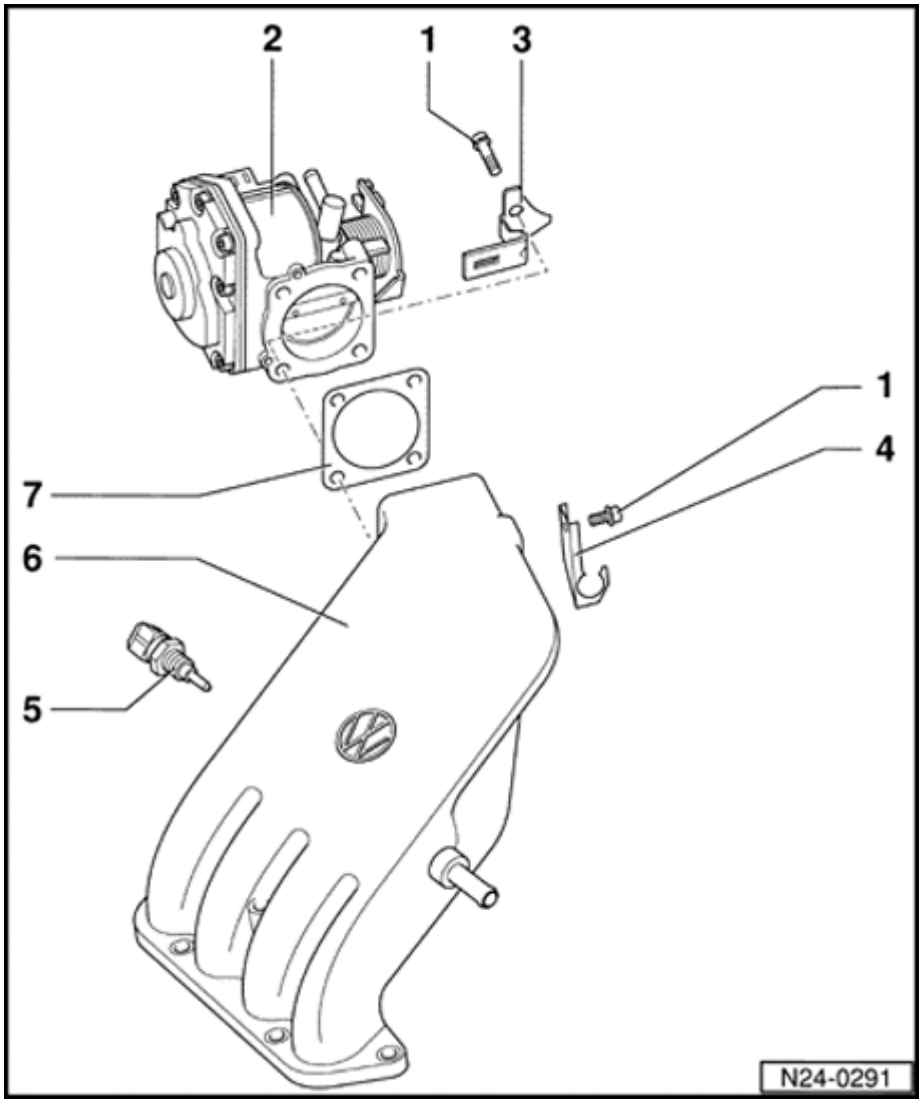

Inta e manifold, upper, remo ing and installing

1 - M6: 10 m (7 ft l)

M8 20 m (15 ft lb)

2 - T rottle al e control module - 338-

- Checking ⇒ Page 24-6
- If replaced, Basic Setting function 04 must be initiated ⇒ Page 24-86
- Throttle Position (TP) actuator - V60-
- Throttle Position (TP) sensor - G88-
- Throttle Position

(TP) sensor - G6 -

- Closed Throttle Position (CTP) switch - F60-

3 - Retainer

4 - Support rac et

- For accelerator pedal cable
- Adjusting accelerator pedal cable

⇒ *Repair Manual, 2.0 Liter 4-Cyl. 2V Engine Mechanical, Engine Code(s): ABA m.y. 1995 - 1997, Repair Group 20*

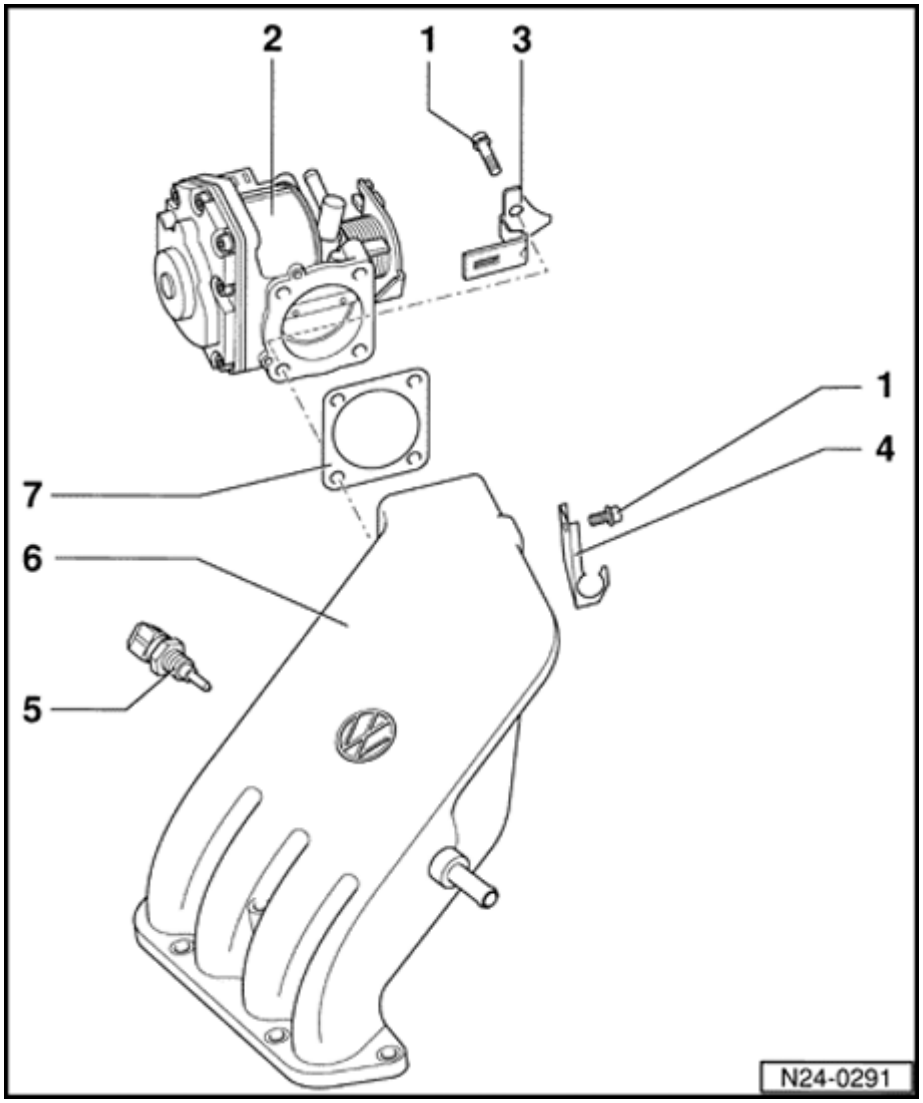

5 - Inta e Air Temperature (IAT) sensor -G72-

- 10 m (7 ft lb)
- Checking ⇒ Page 24- 5

6 - Inta e manifold, upper

7 - Gas et

- Always replace

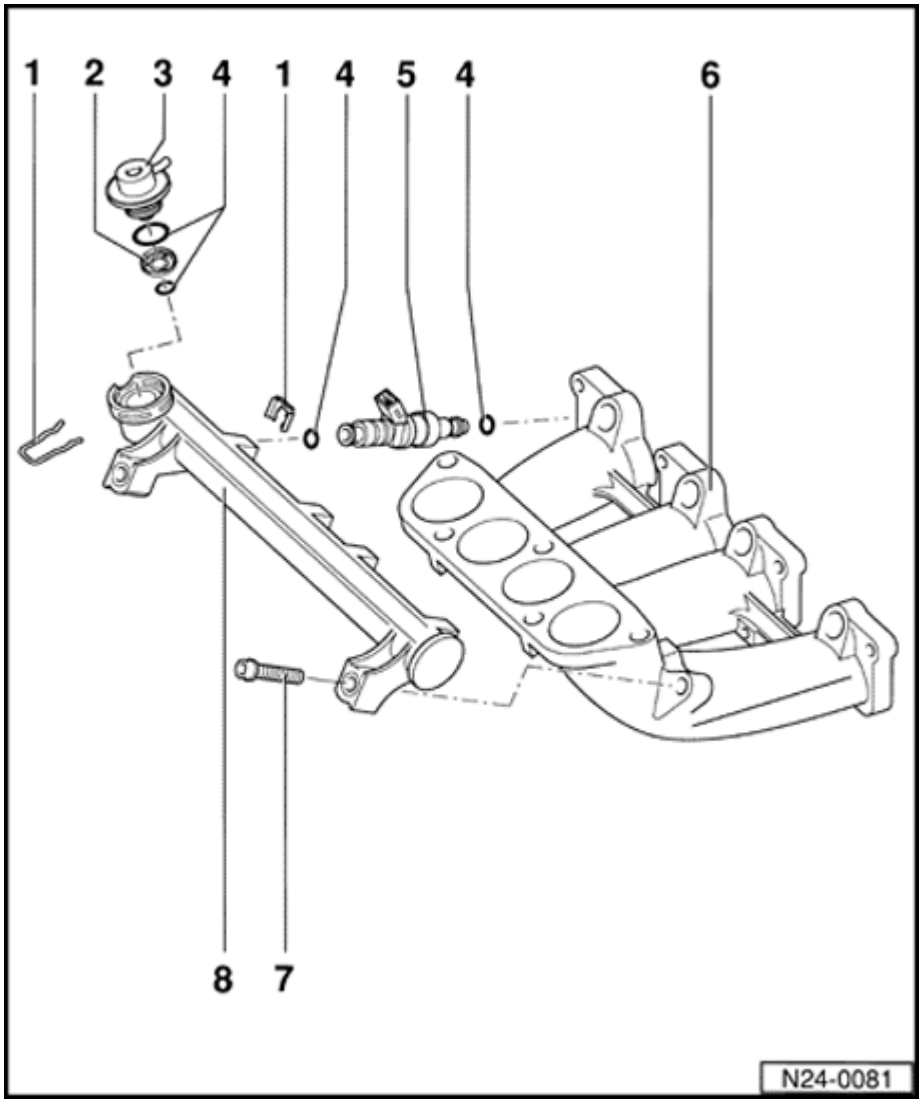

Inta e manifold, lower, remo ing and installing

1 - Retaining clip

- Check securely seated

2 - Strainer

3 - Fuel pressure regulator

- Checking ⇒ Page 24-121

4 - O-ring

- Replace if damaged

5 - Fuel Injectors /

- Cylinder 1 - 30-
- Cylinder 2 - 31-
- Cylinder 3 - 32-
- Cylinder 4 - 33-
- Checking ⇒ Page 24-116

6 - Inta e manifold, lower

7 - 10 m (7 ft l)

8 - Fuel rail

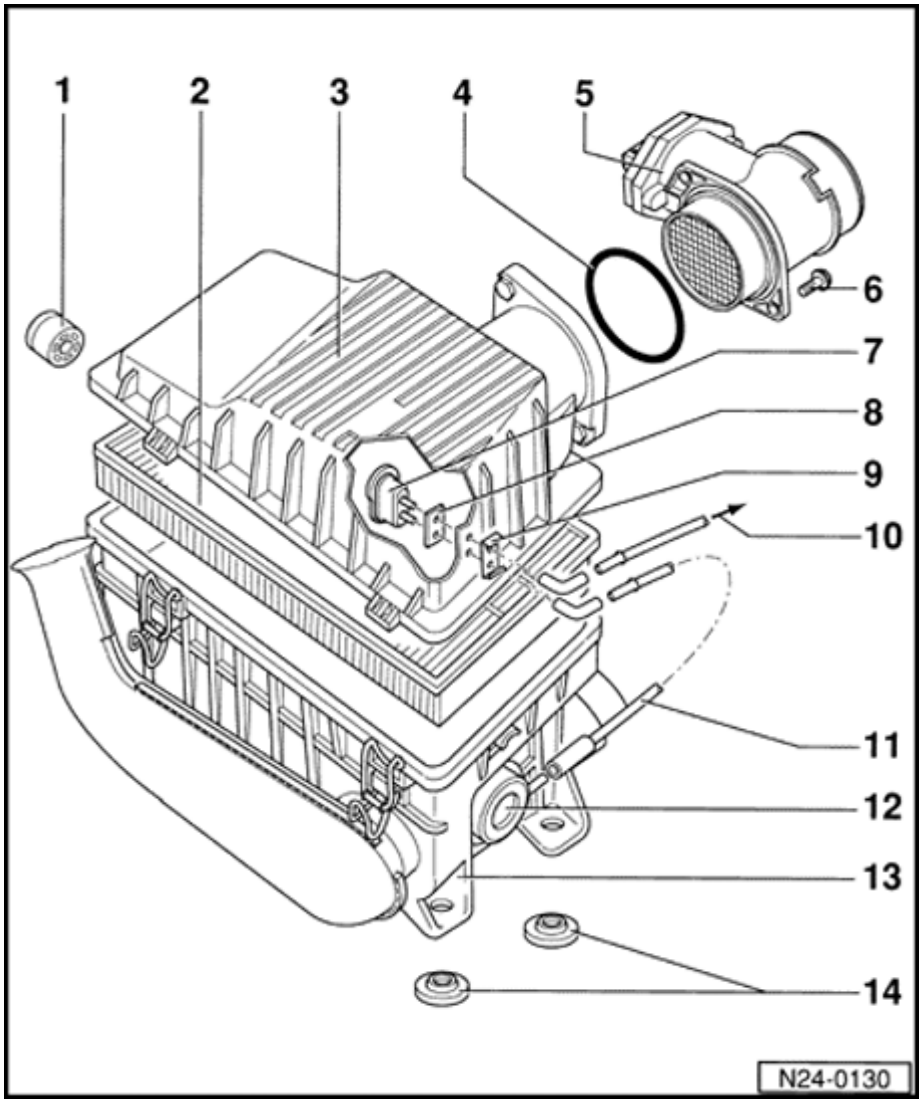

Air Cleaner (ACL), remo ing and installing

1 - Ru er grommet

2 - Air cleaner element

3 - Air cleaner ousing, upper

4 - O-ring

- Replace if damaged

5 - Mass Air Flow (MAF) sensor - G70-

- Checking ⇒ Page 24-63

6 - 10 m (7 ft l)

7 - Temperature regulator T ermal Vacuum Val e (TVV)

- For intake air preheating
- Metal connector pipe or with notch toward

regulator flap

- Intake air preheating, checking ⇒ Page 24-127

8 - Gas et

- Replace if damaged

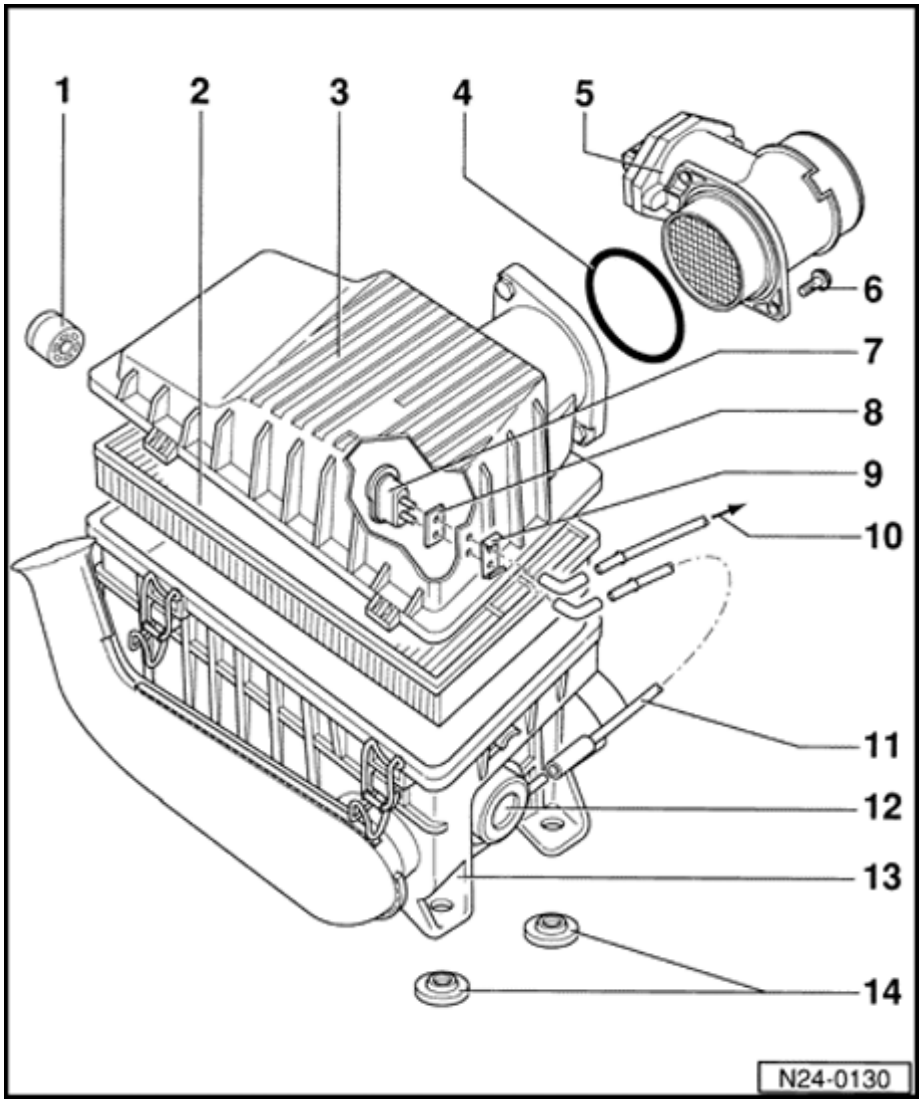

9 - Mounting plate

10 - To inta e ose

11 - Vacuum ose

12 - Vacuum unit

13 - Air cleaner ousing, lower

14 - Spacer

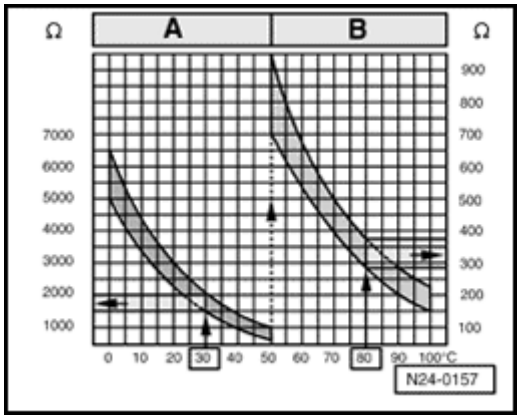

Fig. 1 Resistance grap

The diagram applies to Engine Coolant Temperature (ECT) sensor -G62- and Intake Air Temperature (IAT) sensor -G72-

Scale A shows resistance values for temperature range 0 °-50 °C (32 °-122 °F) and scale B shows the values for temperature range 50 °-100 °C (122 °-212 °F)

E amples:

- 30 °C (86 °F) corresponds to a resistance from 1500-2000 ohms (Ω)
- 80 °C (176 °F) corresponds to a resistance from 275-375 ohms (Ω)

Safety precautions

WARNING!

Fuel system is under pressure! Before opening the system place a rag around the connection. Then release pressure by slowly loosening the connection.

Be alert when working on or near the engine. High ignition secondary voltage can cause serious personal injury and damage vehicle components.

- ***DO NOT touch or disconnect ignition system wires when the engine is running or being cranked at starting RPM.***
- ***DO NOT operate the starter if the fuel injectors have been removed.***

Be sure the ignition is switched OFF, when:

- ***Disconnecting ignition wires***
- ***Disconnecting fuel injection system wiring***
- ***Connecting or disconnecting test equipment leads***
- ***Disconnecting the battery***
- ***Washing the engine or engine compartment.***

BEFORE cranking the engine at starting RPM (such as for compression testing) disable the ignition and fuel injection systems:

- ***Disconnect the ignition coil power output stage.***

- ***Disconnect harness connectors from all fuel injectors.***
- ***After the work is completed, erase DTC memory.***

CAUTION!

BEFORE disconnecting the battery:

- ***Stop the engine.***
- ***Be sure the ignition is switched OFF (also applies when connecting the battery). Failure to do so may damage the Engine Control Module (ECM).***
- ***Be sure of the proper radio code (for vehicles equipped with coded anti-theft radio).***

Be sure the battery negative (-) cable is disconnected, when:

- ***Working on the electrical system***
- ***Resistance (spot) welding or electric arc welding anywhere on the vehicle.***

When connecting and disconnecting electrical test equipment (LED voltage tester, multimeter, etc.):

- ***Be sure the ignition is switched OFF.***
- ***Use correct adapters from the VW 1594 connector test kit.***

For any work affecting the Engine Control Module (ECM):

- ***BEFORE disconnecting the ECM harness connector, switch the ignition OFF and WAIT at least 20 seconds. Failure to do so may damage the ECM.***
- ***DO NOT connect any outside voltage source to stimulate an output signal at the ECM.***

Rules for cleanliness

CAUTION!

Whenever carrying out work on the fuel supply and fuel injection systems, carefully observe the following five rules of cleanliness.

1 - Thoroughly clean fuel system line and hose connections and the surrounding area before disconnecting

2 - Place removed components on a clean surface and cover se plastic sheeting or paper Do not use fluffy rags that could leave lint

3 - Carefully cover over or seal any components that have been opened if repairs are not carried out immediately

4 - Install only clean parts

Do not remove replacement parts from the packaging until immediately before they are to be installed

Do not use parts that have been stored without packaging (e g in toolboxes, etc)

5 - hen the fuel system is opened

Avoid working with compressed air whenever possible

Avoid moving the vehicle if possible

Tec nical data

Engine code		ABA
Idle c ec [1]		
Idle speed	RPM	800 to 880 [2]
Oxygen sensor control factor		-5 0 to 5 0 [2][3]
Ignition timing		2 0 to 15 0 ∠ 5[2][3]
Engine control module (ECM) [4]		
Part number		⇒ Parts catalog
Governed engine speed	RPM	5800 to 6000

[1] Observe test conditions ⇒ Page 24-23

[2] ot adjustable

[3] Display fluctuates

[4] If replaced, initiate Basic Setting function 04 ⇒ Page 24-86

Idle speed, c ec ing

- Idle speed, ignition timing and CO content not adjustable
- The idle speed is regulated by the throttle valve control module
- The position of the distributor has no influence on ignition timing
- The CO content is held to specification by the oxygen sensor control Malfunctions in oxygen sensor control will be detected by On Board Diagnostic (OBD) and stored in Diagnostic Trouble Code (DTC) memory

Special tools, testers and au iliary items

- VAG 1551 scan tool with VAG 1551/3 adapter cable

Test conditions

- o malfunctions stored in DTC memory ⇒ Page 01-12 , checking DTC memory
- Engine oil temperature minimum 80 °C (176 °F)
- Electrical consumers switched off (radiator coolant fan must not run during the check)
- A/C switched off
- Exhaust system must be free of leaks

Test se uence

- Engine running at idle

- Connect VAG 1551/1552 scan tool and select Engine Electronics address word 01 ⇒ Page 01-7

Rapid data transfer **Select function**	**EL**	⮜	Indicated on display - Press buttons -0- and -4- to select Basic Setting function 04 and press - - button to confirm input
Basic Setting **Input display group num er**	**EL**	⮜	Indicated on display - Press buttons -0-, -0- and -1- to input display group 001 and press - - button to confirm input
System in Basic Setting **1 2 3 4**	**1** →	⮜	Indicated on display (1-4 = Display fields)

Note:

In "Basic Setting" function 04 the Evaporative Emission (EVAP) canister purge regulator valve - N80- is closed.

- Do not continue with check until engine temperature exceeds 80 °C (176 °F) in display field 2

- Briefly increase engine speed (rev-up) and then allow engine to run at idle speed for 2 minutes

- Check specifications (display fields 1-4)

	Display fields			
	1	2	3	4
Display group 001: Idle test				
Display	**R M**	**. °C**	**.**	**. ∠°**
Indicated	**Engine speed**	**Coolant temperature**	**O ygen Sensor (O2S) control**	**Ignition angle**
orking range	**800 - 6000 R M**	**-**	**-25.0 to 25.0**	**0.0 - 40.0 ∠°**
Specification	**800 - 880 R M**	**80.0 - 105.0 °C**	**Must fluctuate y at least 2 in t e range -5.0 to 5.0**	**2.0 - 15.0 ∠°**
	If specification is not attained ⇒ age 24-69 : c ec t rottle al e control module	**-**	**If specification is not attained ⇒ age 24-26 : c ec eated O ygen Sensor (O2S) and O2S control (efore t ree way catalytic con erter)**	**If specification is not attained ⇒ age 28-14 : c ec ing ignition timing**

- Press → button

- Press buttons -0- and -6- to select End Output function 06 and press - - button to confirm input

- Perform a road test and repeat check

- Read readiness code ⇒ Page 01-33 If DTC memory has been erased, repair must be verified via appropriate display group ⇒ Page 01-35 , Readiness code, creating

eated O ygen Sensor (O2S) and O ygen Sensor (O2S) control, c ec ing (efore t ree way catalytic con erter)

Special tools, testers and au iliary items

- VAG 1551/1552 scan tool with VAG 1551/3 adapter cable
- VAG 15 8/18 test box
- Multimeter (Fluke 83 or e uivalent)
- Connector test kit V 15 4
- iring diagram

Test conditions

- Coolant temperature at least 80 °C (176 °F)

Functional c ec

- Engine running at idle

- Connect VAG 1551/1552 scan tool and select Engine Electronics address word 01 ⇒ Page 01-7

Rapid data transfer **Select function**	**EL**	⮜	Indicated on display

- Press buttons -0- and -8- to select Read Measuring Value Block function 08 and press - - button to confirm input

Read Measuring Value Bloc EL

Input display group num er

Indicated on display

- Press buttons -0-, -2- and -5- to input display group 025 and press - - button to confirm input

Read Measuring Value Bloc 25 →

1 2 3 4

Indicated on display (1-4 = Display fields)

- Check specifications for O2S control (before three way catalytic converter) in display fields 1-3

	Display fields			
	1	2	3	4
Display group 025: O ygen Sensor (O2S) control efore T ree ay Catalytic Con erter (T C)				
Display	**.**	**.**	**.**	xxx ms
Indicated	**O2S control**	**artial load adaptation alue**	**Idle adaptation alue**	O2S control status (before T C)
orking range	**-25.0 to 25.0**	**-16.4 to 16.4**	**-16.4 to 16.4**	-
Specification	**T e alue must fluctuate at least 2 wit in range -5.0 to 5.0**	**-5.0 to 5.0 can fluctuate slig tly**	**-5.0 to 5.0 can fluctuate slig tly**	Relevance ⇒ Page 24-32
	If specification is not attained ⇒ age 24-28 , continuation	**If specification is not attained ⇒ age 24-30 , e aluating display group 025**		-

Continuation

If the specification in display field 1 is not attained, or the value does not fluctuate at least 2

- Perform a test drive to remove possible residue on HO2S and repeat check

If the the specification in display field 1 is not attained even after a road test, or the value does not fluctuate at least 2

- Check O2S heating ⇒ Page 24-36

If the value displayed in display field 1 remains constant

- Press -C- button

- Press buttons -1-, -1- and -5- to input display group 115 and press - - button to confirm input

Read Measuring Value Bloc 115 →

1 2 3 4

Indicated on display (1-4 = Display fields)

- ote HO2S voltage in display field 3

	Display fields			
	1	2	3	4
Display group 115: eated O ygen Sensor (O2S) efore T ree ay Catalytic Con erter (T C)				
Display	xxx x °C	xxx x °C	. V	xxxxxxxx
Indicated	Coolant temperature	Exhaust gas temperature (calculated)	**O2S oltage (efore T C)**	O2S control status (before T C)
orking range	-46 5 to 141 0 °C	0 0 - °C	**0.000 - 1.000 V**	-
Specification	80 0 to 105 0 °C	Min 140 0 °C	**T e oltage must fluctuate at least 0.3 V at least 30 times per minute in t e range** **0.000 - 1.000 V**	Relevance ⇒ Page 24-32
	-	-	**If specification is not attained ⇒ age 24-31 , e aluating display group 115**	-

- Press → button

- Press buttons -0- and -6- to select End Output function 06 and press - - button to confirm input

- Switch ignition off

E aluating display group 025

Display group 025 Display field 2 and 3	Possible malfunction cause	Malfunction elimination
Adaptation values in range -5 to -16 4	♦ Crankcase dilution when the partial load adaptation value (display field 2) is normal	- Oil change or a fast drive on country roads
	♦ Fuel pressure too high	- Check fuel pressure regulator ⇒ Page 24-121
	♦ Fuel injector leaking	- Check fuel injectors ⇒ Page 24-116
	♦ Oxygen Sensor (O2S) heating	- Check O2S heating ⇒ Page 24-36
Adaptation values in range 5 to 16 4	♦ nmetered air in air intake system or exhaust manifold/front pipe hen the partial load adaptation value (display field 2) is normal	- Check intake air system for leaks (unmetered air) ⇒ Page 24-125 - Check exhaust system for leaks ⇒ *Repair Manual, 2.0 Liter 4-Cyl. 2V Engine Mechanical, Engine Code(s): ABA m.y. 1995 - 1997, Repair Group 26*
	♦ Fuel pressure too low	- Check fuel pressure regulator ⇒ Page 24-121
	♦ Check O2S heating	- Check O2S heating ⇒ Page 24-36
	♦ Fuel injector not opening or only partly opening	- Check fuel injectors ⇒ Page 24-116
Adaptation values constant 0 0	♦ Oxygen Sensor (O2S) control adaptation not active	- Check whether O2S control adaptation is active ⇒ Page 24-32

		If O2S control adaptation is not active - Check Mass Air Flow (MAF) sensor ⇒ Page 24-63

E aluating display group 115

Display group 115 Display field 3	Possible malfunction cause	Malfunction elimination
Approx 0 435 V	♦ Open circuit in wire 4 between Heated Oxygen Sensor (HO2S) and Engine Control Module (ECM)	- Check basic voltage ⇒ Page 24-33
Approx 0 440 V	♦ Open circuit in wire 3 between HO2S and ECM	
Approx 1 085 V	♦ Short circuit to positive (B) in wire 4 between HO2S and ECM	- Check HO2S wiring ⇒ Page 24-34
Approx 0 000 V	♦ Short circuit to Ground (G D) in wire 4 between HO2S and ECM	

Rele ance of alues in 8-digit num er loc

Rele ance w en display 1									
x	x	x	x	x	x	x	x	O2S control status (display group 025)	O2S control status (display group 115)
							1	HO2S ready (before T C)	Malfunction in DTC memory
						1		HO2S ready (after T C)	Malfunction detected during this diagnosis
					1			O2S control active (before T C)	Diagnosis completed during this drive
				1				O2S adaptation active	Diagnosis currently active
			1					ot relevant	O2S control active (before T C)
		1						HO2S voltage initial sign	HO2S ready (before T C)
	1							ot relevant	Both HO2S cold
1								1 O2S control regulating fre uency rich 0 O2S control regulating fre uency lean	O2S heating on (before T C)

C ec ing asic oltage

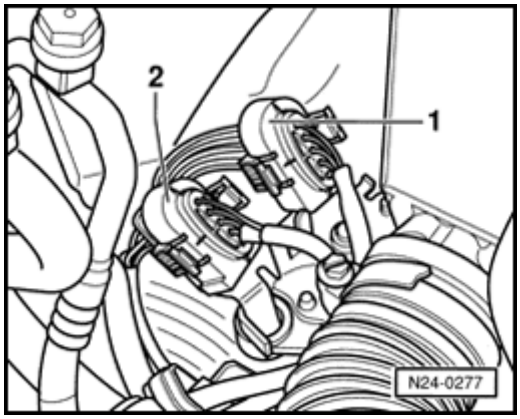

- Separate 4-pin connector (black) -1- to HO2S -G3 - (before three way catalytic converter)

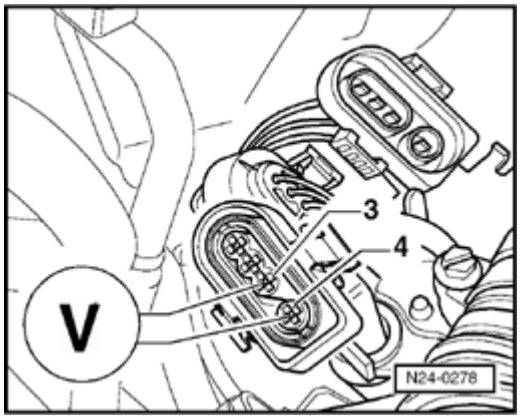

- Connect multimeter with test leads from V 15 4 to measure voltage between terminals 3 and 4 (ECM side of harness connector)
- Start engine and measure the basic voltage

  Specification 0 40-0 50 volts
- Switch ignition off

If the specification is not attained

- Check HO2S wiring ⇒ Page 24-34

If the specification is attained

- Replace HO2S -G3 - (before three way catalytic converter)

C ec ing eated O ygen Sensor (O2S) wiring

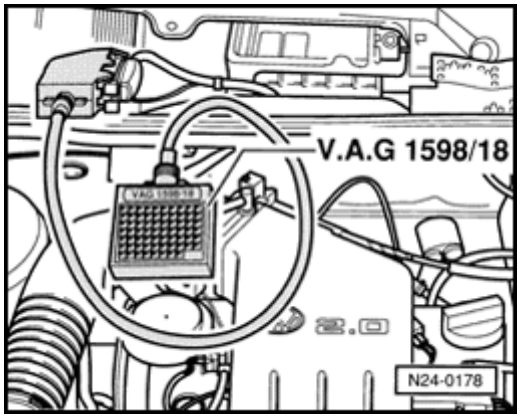

- Connect VAG 15 8/18 test box to ECM wiring harness

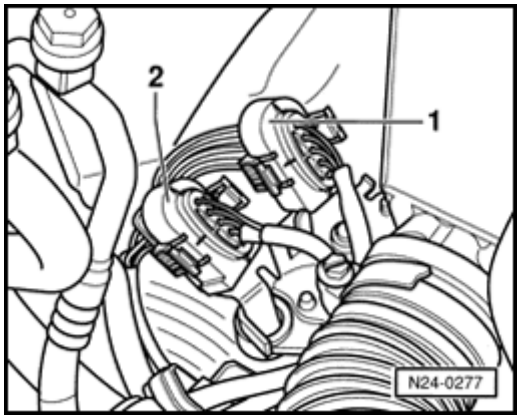

- Separate 4-pin connector -1- (black) to HO2S -G3 - (before three way catalytic converter)

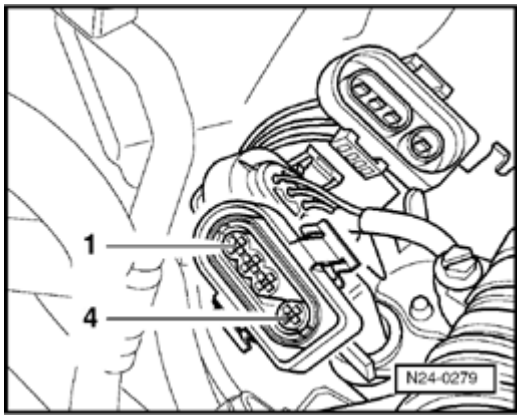

- Check wiring between test box and 4-pin connector for open circuit according to wiring diagram (ECM side of harness connector)
  - Terminal 3 and test box socket 42
  - Terminal 4 and test box socket 20

  Resistance maximum 1 5 ohms (Ω)
- Additionally, check wiring at 4-pin connector for short circuit to one another

  Terminal 4 and test box socket 42

  Specification ∞ ohms (Ω)
- Check shielding for short circuit to HO2S wiring according to wiring diagram
  - Terminal 4 and test box socket 56
  - Terminal 3 and test box socket 56

  Specification ∞ ohms (Ω)

If no wiring malfunction is detected

- Replace ECM -J220-
- Read readiness code ⇒ Page 01-33 If DTC memory has been erased, repair must be verified via appropriate display group ⇒ Page 01-35 , Readiness code, creating

O ygen Sensor (O2S) eating, c ec ing (efore t ree way catalytic con erter)

Special tools, testers and au iliary items

- VAG 1551/1552 scan tool with VAG 1551/3 adapter cable
- VAG 15 8/18 test box
- Multimeter (Fluke 83 or e uivalent)
- Connector test kit V 15 4
- iring diagram

Test conditions

- Fuse 18 OK

Test se uence

- Engine running at idle

- Connect VAG 1551/1552 scan tool and select Engine Electronics address word 01 ⇒ Page 01-7

Rapid data transfer	**EL**	⮜	Indicated on display
Select function			

- Press buttons -0- and -8- to select Read Measuring Value Block function 08 and press - - button to confirm input

Read Measuring Value Bloc EL

Input display group num er

Indicated on display

- Press buttons -1-, -2- and -0- to input display group 120 and press - - button to confirm input

Read Measuring Value Bloc 120 →

1 2 3 4

Indicated on display (1-4 = Display fields)

- Check the resistance value for oxygen sensor heating before three way catalytic converter (display field 3)

	Display fields			
	1	2	3	4
Display group 120: O ygen Sensor (O2S) eating efore T ree ay Catalytic Con erter (T C)				
Display	xxx x °C	xxx xx sec	. Ω	xxxxxxxx
Indicated	Exhaust gas temperature	Time to start of diagnosis after heating on	**O2S eating resistance (efore T C)**	Oxygen Sensor (O2S) control status (before T C)
orking range	0 0 - °C	0 00 - 500 00 sec	**0.0 - 65.0 Ω**	Relevance ⇒ Page 24-38
Specification	-	100 00 - 200 00 sec	**5.9 - 24.2 Ω**	
	-	-	**If specification is not attained ⇒ age 24-39 , continuation**	-

- Press → button

- Press buttons -0- and -6- to select End Output function 06 and press - - button to confirm input

- Switch ignition off

Rele ance of alues in 8-digit num er loc

Rele ance if display 1								
x	x	x	x	x	x	x	x	Oxygen sensor control status (display group 120)
							1	Malfunction in DTC memory
						1		Malfunction detected during this diagnosis
					1			Diagnosis completed during this drive
				1				Diagnosis currently active
			1					O2S heating ready (before T C)
		1						HO2S ready (before T C)
	1							Vapor point exceeded (before T C)
1								1 O2S heating (before T C) on Alternately 0 and 1 O2S heating is fluctuating

Continuation

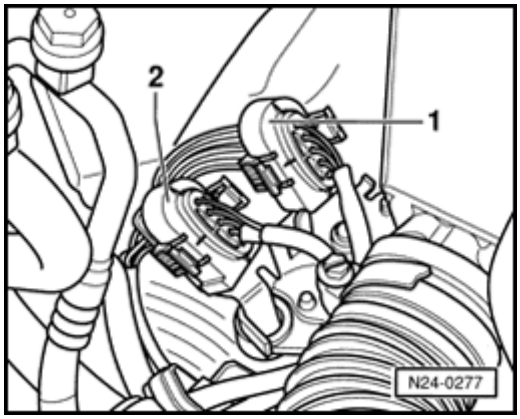

- Separate 4-pin connector -1- (black) to HO2S -G3 - (before three way catalytic converter)

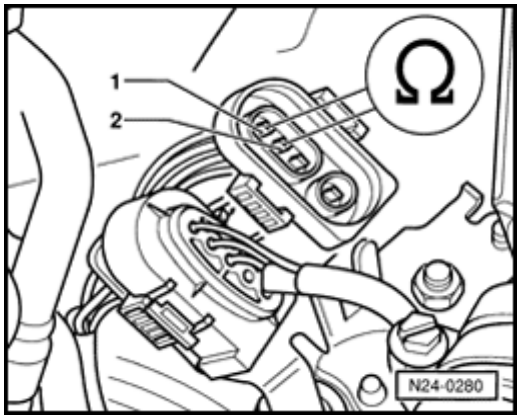

- Connect multimeter with test leads from V 15 4 to measure resistance at terminals 1 and 2 on connector to HO2S
- Check the resistance value

  Specification 0 0-24 2 ohms (Ω)

If t e specification is not attained:

- Replace HO2S -G3 - (before three way catalytic converter)

If t e specification is attained:

- Check relevance table ⇒ Page 24-38 for val of O2S control status, display group 120, dis field 4, 1st position from left

- Set multimeter to voltage measurement rang

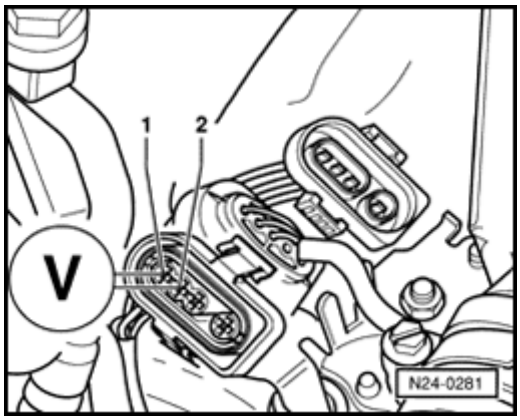

- Connect multimeter using test leads from V 15 4 to measure voltage between terminals and 2 (ECM side of harness connector)
- Measure voltage supply

  hen display 1 specification is 11 0-14 5

  hen display alternately 0 and 1 specifica is fluctuating between 0 0-12 0 volts

If no oltage is present:

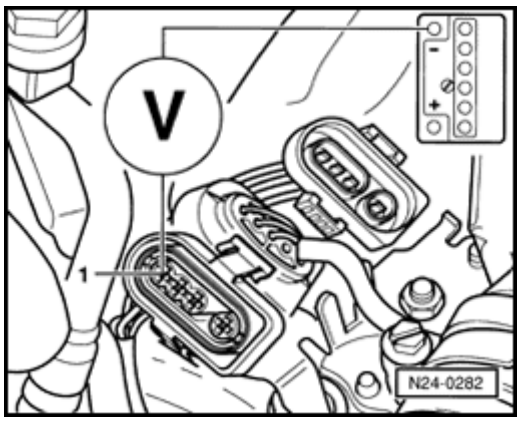

- Connect multimeter with test leads from V 15 4 to measure voltage between terminal 1 (ECM side of harness connector) and vehicl Ground (G D)

  Specification 11 0-14 5 volts

If again no voltage is present

- Check wiring from terminal 1 to relay panel according to wiring diagram

If oltage was present:

- Check relevance table ⇒ Page 24-38 for val of O2S control status, display group 120, dis field 4, 1st position from left

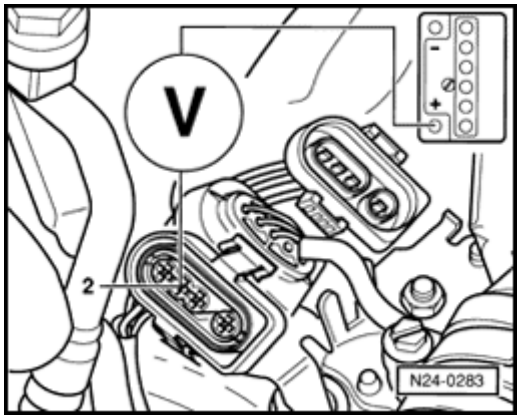

- Connect multimeter using test leads from V 15 4 between terminal 2 (ECM side of harne connector) and battery positive (B)

  hen display 1 specification is 11 0-14 5

  hen display alternately 0 and 1 specifica is fluctuating between 0 0-12 0 volts

- Switch ignition off

If no oltage is present:

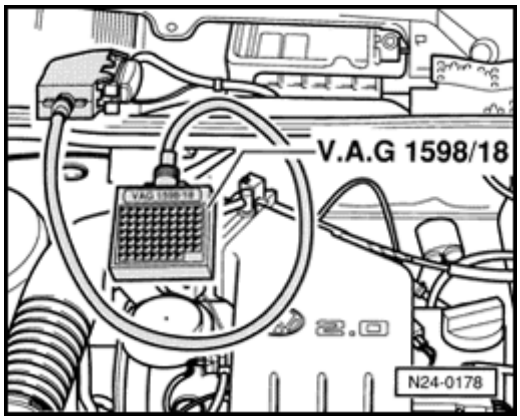

- Connect VAG 15 8/18 test box to ECM wirir harness

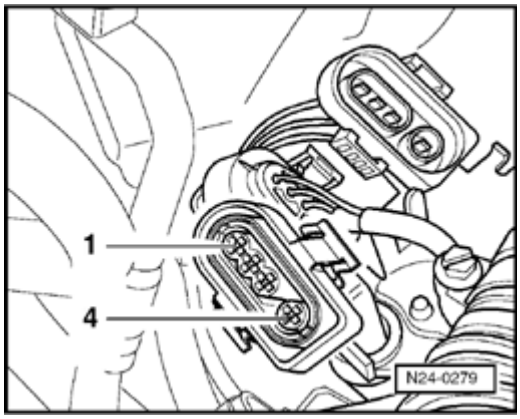

- Check wiring between test box and 4-pin connector for open circuit according to wiring diagram

  Terminal 2 and test box socket 12

  Resistance maximum 1 5 ohms (Ω)

If no wiring malfunction is detected

- Replace Engine Control Module (ECM) -J220-
- Read readiness code ⇒ Page 01-33 If DTC memory has been erased, repair must be verified via appropriate display group ⇒ Page 01-35 , Readiness code, creating

eated O ygen Sensor (O2S) 2 and O ygen Sensor (O2S) control, c ec ing (after t ree way catalytic con erter)

Special tools, testers and au iliary items

- VAG 1551/1552 scan tool with VAG 1551/3 adapter cable
- VAG 15 8/18 test box
- Multimeter (Fluke 83 or e uivalent)
- Connector test kit V 15 4
- iring diagram

Test conditions

- Coolant temperature at least 80 °C (176 °F)

Functional c ec

- Engine running at idle

- Connect VAG 1551/1552 scan tool and select Engine Electronics address word 01 ⇒ Page 01-7

Rapid data transfer **Select function**	**EL**	⮜	Indicated on display

- Press buttons -0- and -8- to select Read Measuring Value Block function 08 and press - - button to confirm input

Read Measuring Value Bloc EL

Input display group num er

Indicated on display

- Press buttons -1-, -1- and -6- to input display group 116 and press - - button to confirm input

Read Measuring Value Bloc 116 →

1 2 3 4

Indicated on display (1-4 = Display fields)

- ote HO2S voltage (display field 3)

	Display fields			
	1	2	3	4
Display group 116: eated O ygen Sensor (O2S) 2 after T ree ay Catalytic Con erter (T C)				
Display	xxx ms	xxx x °C	. V	xxxxxxxx
Indicated	Regulating fre uency	Exhaust gas temperature (calculated)	**O2S oltage (after T C)**	Oxygen Sensor (O2S) control status (after T C)
orking range	-	0 0 - °C	**0.000 - 1.000 V**	-
Specification	-	Min 140 0 °C	**0.000 - 1.000 V (can fluctuate marginally)**	Relevance ⇒ Page 24-45
	-	-	**If specification is not attained ⇒ age 24-45 , continuation**	-

Continuation

- Perform a test drive to remove possible residue from HO2S and repeat check

If the specification in display field 3 is not attained even after a test drive

- Check O2S heating ⇒ Page 24-50

- Increase engine speed to above 3000 RPM

If the value in display field 3 remains constant ⇒ evaluating display group 116

E aluating display group 116

Display group 116 Display field 3	Possible malfunction cause	Malfunction elimination
Approx 0 435 V	♦ iring open circuit in wire 4 between HO2S and Engine Control Module (ECM)	- Check basic voltage ⇒ Page 24-47
Approx 0 440 V	♦ iring open circuit in wire 3 between HO2S and ECM	
Approx 1 085 V	♦ Short circuit to positive (B) in wire 4 between HO2S and ECM	- Check HO2S wiring ⇒ Page 24-48
Approx 0 000 V	♦ Short circuit to Ground (G D) in wire 4 between HO2S and ECM	

Rele ance of alues in 8-digit num er loc

Rele ance if display 1								
x	x	x	x	x	x	x	x	O2S control status (display group 116)
							1	Malfunction in Diagnostic Trouble Code (DTC) memory
						1		Malfunction detected during this diagnosis
					1			Diagnosis completed during this drive
				1				Diagnosis currently active
			1					O2S control active (before T C)
		1						HO2S ready (after T C)
	1							Both Heated Oxygen Sensors (HO2S) cold
1								O2S heating on (after T C)

C ec ing asic oltage

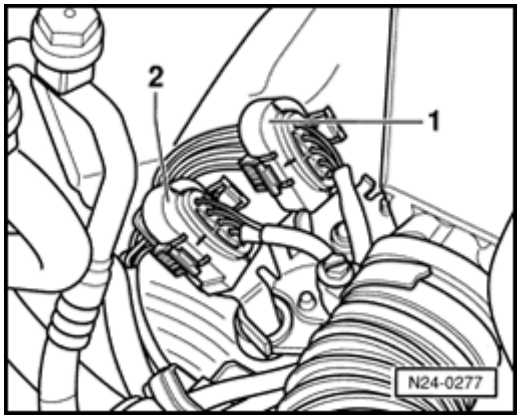

- Separate 4-pin connector -2- (brown) to HO2S 2 -G108- (after three way catalytic converter)

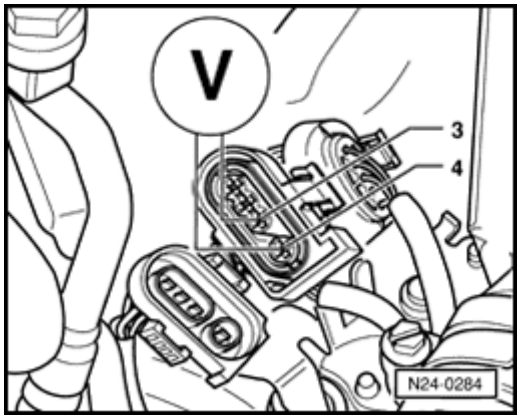

- Connect multimeter using test leads from V 15 4 to measure voltage between terminals 3 and 4 (ECM side of harness connector)
- Start engine and measure basic voltage

  Specification 0 40-0 50 volts
- Switch ignition off

If the specification is not attained

- Check HO2S wiring ⇒ Page 24-48

If the specification is attained

- Replace HO2S 2 -G108- (after three way catalytic converter)

C ec ing eated O ygen Sensor (O2S) wiring

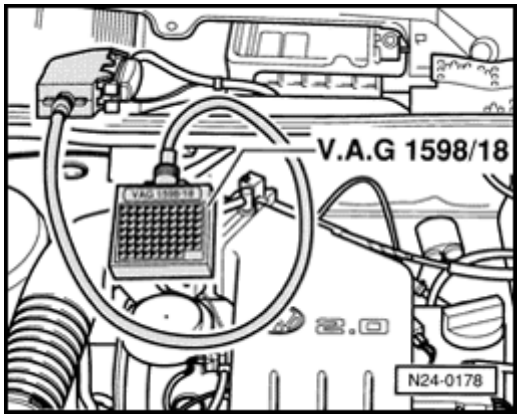

- Connect VAG 15 8/18 test box to ECM wiring harness

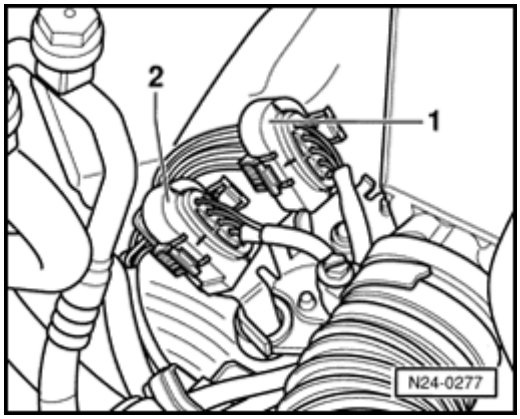

- Separate 4-pin connector -2- (brown) to HO2S 2 -G108- (after three way catalytic converter)

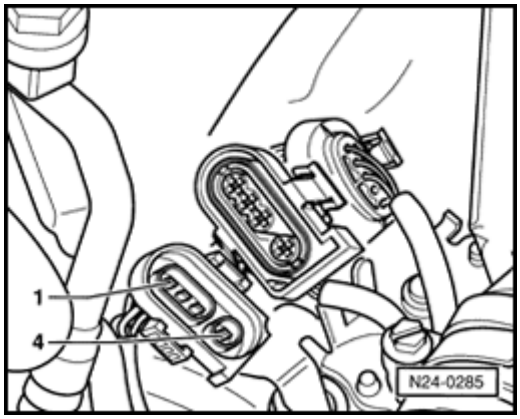

- Check wiring between test box and 4-pin connector to ECM for open circuit according to wiring diagram
  - Terminal 3 and test box socket 58
  - Terminal 4 and test box socket 13

  Resistance maximum 1 5 ohms (Ω)
- Additionally, check wiring to 4-pin connector for short circuits to one another

  Terminal 4 and test box socket 58

  Specification ∞ ohms (Ω)
- Check shielding for short circuit to HO2S wiring
  - Terminal 4 and test box socket 56
  - Terminal 3 and test box socket 56

  Specification ∞ ohms (Ω)

If no wiring malfunction is detected

- Replace Engine Control Module (ECM) -J220-
- Read readiness code ⇒ Page 01-33 If DTC memory has been erased, repair must be verified via appropriate display group ⇒ Page 01-35 , Readiness code, creating

O ygen Sensor (O2S) eating, c ec ing (after t ree way catalytic con erter)

Special tools, testers and au iliary items

- VAG 1551/1552 scan tool with VAG 1551/3 adapter cable
- VAG 15 8/18 test box
- Multimeter (Fluke 83 or e uivalent)
- Connector test kit V 15 4
- iring diagram

Test conditions

- Fuse 18 OK

Test se uence

- Engine running at idle

- Connect VAG 1551/1552 scan tool and select Engine Electronics address word 01 ⇒ Page 01-7

Rapid data transfer	**EL**	⮜	Indicated on display
Select function			

- Press buttons -0- and -8- to select Read Measuring Value Block function 08 and press - - button to confirm input

Read Measuring Value Bloc EL

Input display group num er

Indicated on display

- Press buttons -1-, -2- and -1- to input display group 121 and press - - button to confirm input

Read Measuring Value Bloc 121 →

1 2 3 4

Indicated on display (1-4 = Display fields)

- Check resistance value for O2S heating (after three way catalytic converter) in display field 3

	Display fields			
	1	2	3	4
Display group 121: O ygen Sensor (O2S) eating after T ree ay Catalytic Con erter (T C)				
Display	xxx x °C	xxx xx sec	. Ω	xxxxxxxx
Indicated	T C temperature	Time from heating on to diagnosis start	**O2S eating resistance (after T C)**	O2S control status (after T C)
orking range	0 0 - °C	Approx 150 00 sec	**0.0 - 65.0 Ω**	Relevance ⇒ Page 24-52
Specification	-	-	**5.9 - 24.2 Ω**	
	-	-	**If specification is not attained ⇒ age 24-53 , continuation**	-

- Press → button

- Press buttons -0- and -6- to select End Output function 06 and press - - button to confirm input

- Switch ignition off

Rele ance of alues in 8-digit num er loc

Rele ance w en display 1								
x	x	x	x	x	x	x	x	O2S control status (display group 121)
							1	Malfunction in DTC memory
						1		Malfunction detected during this diagnosis
					1			Diagnosis completed during this drive
				1				Diagnosis currently active
			1					O2S heating ready (after T C)
		1						HO2S ready (after T C)
	1							Vapor point exceeded (after T C)
1								1 O2S heating on (after T C) Alternately 0 and 1 O2S heating is fluctuating

Continuation

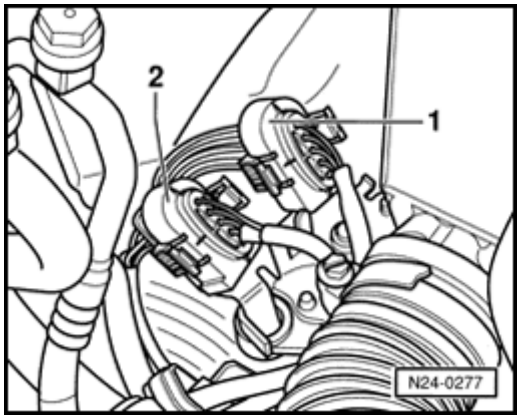

- Separate 4-pin connector -2- (brown) to HO2S 2 -G108- (after three way catalytic converter)

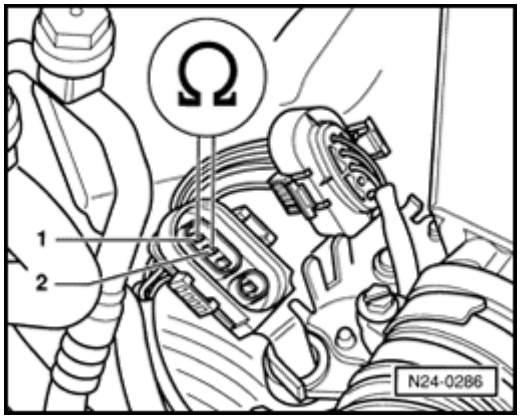

- Connect multimeter with test leads from V 15 4 to measure resistance at terminals 1 and 2 on connector to HO2S 2
- Measure resistance value

  Specification 0 00-24 2 ohms (Ω)

If t e specification is not attained:

- Replace HO2S 2 -G108- (after three way catalytic converter)

If t e specification is attained:

- Check relevance table ⇒ Page 24-52 for val of O2S control status, display group 121, dis field 4, 1st position from left

- Set multimeter to voltage measurement rang

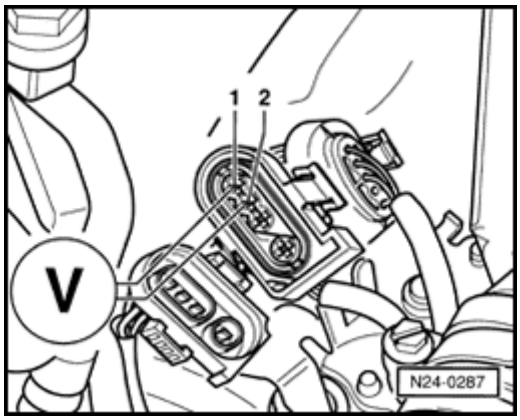

- Connect multimeter with test leads from V 15 4 to measure voltage between terminals and 2 (ECM side of harness connector)
- Measure voltage supply

  hen display 1 specification is 11 0-14 5

  hen display alternately 0 and 1 specifica is fluctuating between 0 0-12 0 volts

If no oltage is present:

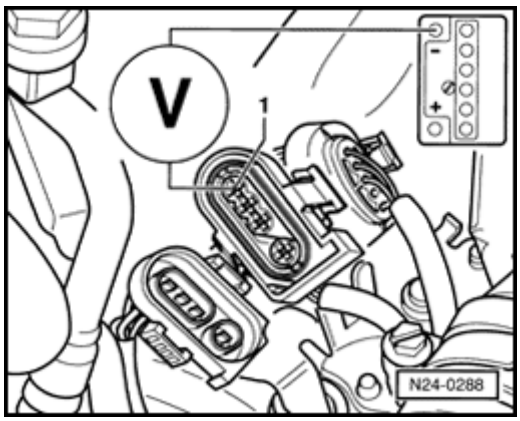

- Connect multimeter using test leads from V 15 4 to measure voltage between terminal 1 (ECM side) and vehicle Ground (G D)

  Specification 11 0-14 5 volts

If again no voltage is present

- Check wiring from terminal 1 to relay panel according to wiring diagram

If oltage was present:

- Check relevance table ⇒ Page 24-52 for val of O2S control status, display group 121, dis field 4, 1st position from left

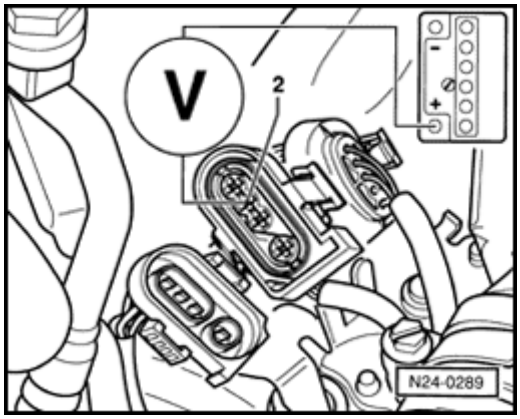

- Connect multimeter with test leads from V 15 4 between terminal 2 (ECM side of harne connector) and battery positive (B)
- Measure voltage supply

  hen display 1 specification is 11 0-14 5

  hen display alternately 0 and 1 specifica is fluctuating between 0 0-12 0 volts
- Switch ignition off

If t e specification is not attained:

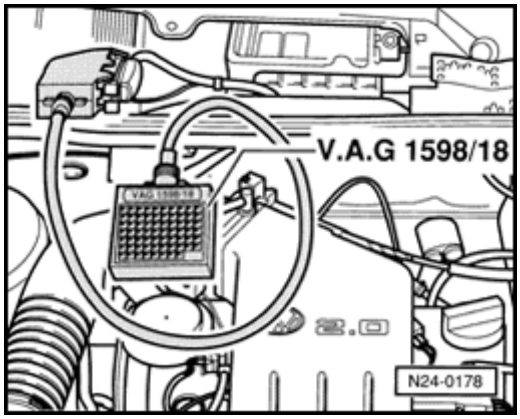

- Connect VAG 15 8/18 test box to ECM wirir harness

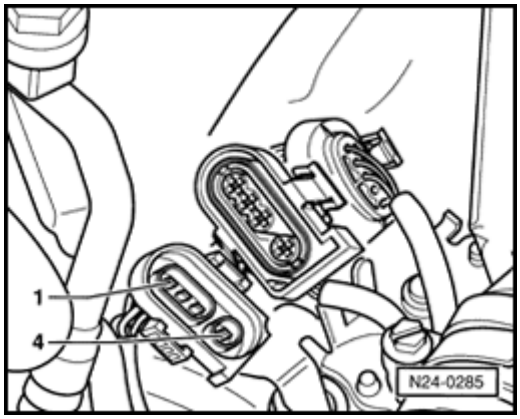

- Check wiring between test box and 4-pin connector for open circuit according to wiring diagram

  Terminal 2 and test box socket 66

  Resistance maximum 1 5 ohms (Ω)

If no wiring malfunction is detected:

- Replace Engine Control Module (ECM) -J220-
- Read readiness code ⇒ Page 01-33 If DTC memory has been erased, repair must be verified via appropriate display group ⇒ Page 01-35 , Readiness code, creating

O ygen Sensor (O2S) aging, c ec ing (efore t ree way catalytic con erter)

Special tools, testers and au iliary items

- VAG 1551/1552 scan tool with VAG 1551/3 adapter cable

Test conditions

- Coolant temperature at least 80 °C (176 °F)

Functional c ec

- Engine running at idle

- Connect VAG 1551/1552 scan tool and select Engine Electronics address word 01 ⇒ Page 01-7

Rapid data transfer **Select function**	**EL**	⮜	Indicated on display - Press buttons -0- and -4- to select Basic Setting function 04 and press - - button to confirm input
Basic Setting **Input display group num er**	**EL**	⮜	Indicated on display - Press buttons -1-, -3- and -0- to input display group 130 and press - - button to confirm input
System in Basic Setting **1 2 3 4**	**130** →	⮜	Indicated on display (1-4 = Display fields) - Increase engine speed to 2200-2800 RPM and check the specifications for O2S aging (before three way catalytic converter) in display fields 1-4

Note:

During the test, engine RPM must be held for at least 1 minute so that exhaust gas temperature is within specification range. Observe O2S control status in display field 4.

	Display fields			
	1	2	3	4
Display group 130: O ygen Sensor (O2S) aging (monitoring signal fre uency of O2S)				
Display	**R M**	**. sec.**		
Indicated	**Engine speed**	**O2S signal fre uency (efore t ree way catalytic con erter)**	**Valid O2S signal fre uency (counted)**	**O2S control status**
orking range	**800 - 6000 R M**	**0.00 - 15.00 sec.**	**0 - 4**	**-**
Specification	**2200 - 2800 R M**	**0.00 - 2.80 sec.**	**4**	**1111 100**
	-	**If specification is not attained ⇒ age 24-59 , continuation**		**Rele ance ⇒ age 24-60**

- Press -C- button

- Press buttons -1-, -3- and -1- to input display group 131 and press - - button to confirm input

System in Basic Setting **131** → Indicated on display (1-4 = Display fields)

1 2 3 4

- Run engine at idle speed and check specifications

	Display fields			
	1	2	3	4
Display group 131: O ygen Sensor (O2S) aging (O2S control signal fre uency e tended)				
Display	**R M**	**. V**	**ms**	
Indicated	**Engine speed**	**O2S oltage (after t ree way catalytic con erter)**	**Signal fre uency e tended**	**O2S control status**
orking range	**800 - 6000 R M**	**0.000 - 1.000 V**	**-**	**-**
Specification	**2200 - 2800 R M**	**0.500 - 0.700 V (can fluctuate marginally)**	**-1200 to 1200 ms**	**1111 100**
	-	**If specification is not attained ⇒ age 24-59 , continuation**		**Rele ance ⇒ age 24-60**

Continuation

If specification is not attained:

- Perform a road test to free HO2S of possible residues and repeat test

If t e specification is again not attained:

- Replace HO2S -G3 - (before three way catalytic converter)

- Read readiness code ⇒ Page 01-33 If DTC memory has been erased, repair must be verified via appropriate display group ⇒ Page 01-35 , Readiness code, creating

Rele ance of alues in 8-digit num er loc

Rele ance w en display 1									
x	x	x	x	x	x	x	x	O2S control status (display group 130)	O2S control status (display group 131)
							1	Malfunction in Diagnostic Trouble Code (DTC) memory	Malfunction in DTC memory
						1		Malfunctions detected during this diagnosis	Malfunctions recognized during this diagnosis
					1			Diagnosis completed during this drive	Diagnosis completed during this drive
				1				Diagnosis currently active	Diagnosis currently active
			1					Diagnosis O2S heating ready (before T C)	O2S control active (before T C)
		1						T C temperature within specified range	O2S control active (after T C)
	1							Engine speed and load within specified range	Engine speed and load within specified range
1								O2S control active (before T C)	T C temperature within specified range

Engine operation, c ec ing

Note:

Check establishes whether Engine Control Module (ECM) -J220-recognizes the engine operating condition.

Special tools, testers and au iliary items

- VAG 1551/1552 scan tool with VAG 1551/3 adapter cable

Test conditions

- Engine oil temperature min 80 °C (176 °F)

Test se uence

- Engine running at idle

- Connect VAG 1551/1552 scan tool and select Engine Electronics address word 01 ⇒ Page 01-7

Rapid data transfer **Select function**	**EL**	≺	Indicated on display - Press buttons -0- and -8- to select Read Measuring Value Block function 08 and press - - button to confirm input
Read Measuring Value Bloc **Input display group num er**	**EL**	≺	Indicated on display - Press buttons -0-, -0- and -5- for display group number 005 and press - - button to confirm input

If the specifications are not attained

Read Measuring Value Bloc **5** →

1 2 3 4

Indicated on display (1-4 = Display fields)

- Check whether ECM recognizes operating mode (display field 4)

	Display fields			
	1	2	3	4
Display group 005: General engine data				
Display	xxx RPM	xx xx ms	xxx km/h	**Idle**
Indicated	Engine speed	Engine load	Vehicle speed	**Operating mode**
orking range	800 - 6000 RPM	0 00 - 25 00 ms	-	**-**
Specification	800 - 880 RPM	-	0 km/h	♦ Idle Idle ♦ Partial load throttle valve slightly open ♦ Enrich rev-up above 3000 RPM, then overrun (close throttle valve abruptly) ♦ Full load only possible when driving

- Check accelerator mechanism for ease of operation
- Check throttle valve control module ⇒ Page 24-6

Mass Air Flow (MAF) sensor, c ec ing

Special tools, testers and au iliary items

- VAG 1551/1552 scan tool with VAG 1551/3 adapter cable
- VAG 15 8/18 test box
- Multimeter (Fluke 83 or e uivalent)
- Connector test kit V 15 4
- iring diagram

Test conditions

- Electrical consumers switched off (radiator coolant fan must not run during the check)
- A/C switched off

Test se uence

- Engine running at idle

- Connect VAG 1551/1552 scan tool and select Engine Electronics address word 01 ⇒ Page 01-7

Rapid data transfer	**EL**	⮜	Indicated on display
Select function			

- Press buttons -0- and -8- to select Read Measuring Value Block function 08 and press - - button to confirm input

Read Measuring Value Bloc EL

Input display group num er

Indicated on display

- Press buttons -0-, -1- and -5- for display group number 015 and press - - button to confirm input

Read Measuring Value Bloc 15 →

1 2 3 4

Indicated on display (1-4 = Display fields)

- Check the load registration 1 specifications (display fields 2 and 3)

	Display fields			
	1	2	3	4
Display group 015: Load registration 1				
Display	xxx RPM	**. ms**		xx x g/s
Indicated	Engine speed	**Engine load**	**Engine load**	Mass air flow
orking range	800 - 6000 RPM	**0.00 - 25.00 ms**	**0 - 40**	-
Specification	800 - 880 RPM	**1.00 - 3.00 ms**	**10 - 30**	3 0 - 4 0 g/s
	-	**If specification is not attained ⇒ age 24-66 , c ec oltage supply and ⇒ age 24-67 , c ec wiring**		-

- Press -C- button

- Press buttons -0-, -1- and -6- for display group number 016 and press - - button to confirm input

Read Measuring Value Bloc **16** → Indicated on display (1-4 = Display fields)

1 2 3 4

- Check load registration specifications 2 (display field 3)

	Display fields			
	1	2	3	4
Display group 016: Load registrations 2				
Display	xxx RPM	xx xx ms	**. ms**	xx xx ms
Indicated	Engine speed	Engine load	**Engine load**	Engine load substitute value from throttle valve angle
orking range	800 - 6000 RPM	0 00 - 25 00 ms	**0 - 25.00 ms**	0 00 - 25 00 ms
Specification	800 - 880 RPM	1 00 - 3 00 ms	**1.00 - 3.00 ms**	1 00 - 3 00 ms
	-	-	**If specification is not attained ⇒ age 24-66 , e aluating display group 016**	-

E aluating display group 016

Display group 016		
Display field 3	Possible malfunction cause	Malfunction elimination
0 00 ms	♦ iring open circuit in wire 3 or 4 between Mass Air Flow (MAF) sensor and ECM	- Check voltage supply ⇒ Page 24-66
Smallest value 5 30 ms	♦ iring open circuit in wire 1 or 2 between MAF sensor and ECM	- Check wiring ⇒ Page 24-67

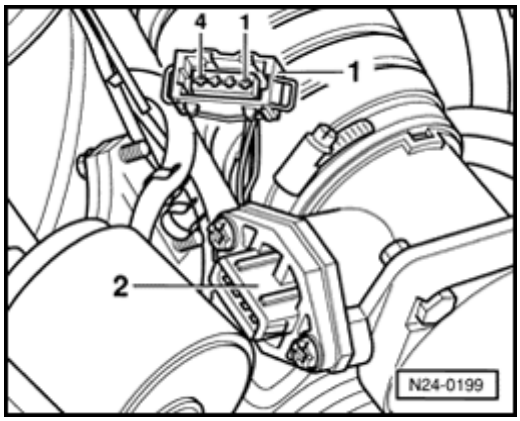

C ec ing oltage supply

- Disconnect 4-pin connector from Mass Air Flow (MAF) sensor
- Connect multimeter with test leads from V 15 4 to measure voltage at terminals1 and 3

  Specification 0-14 5 volts

If no voltage is present

- Switch ignition off
- Check wiring according to wiring diagram

C ec ing wiring

- Switch ignition off

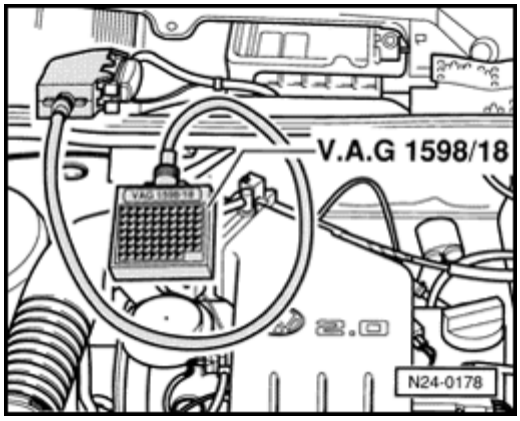

- Connect VAG 15 8/18 test box to ECM wiring harness

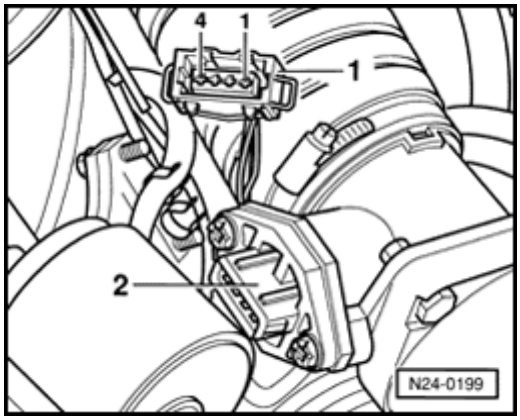

- Check wiring between test box and 4-pin connector for open circuit according to wiring diagram
  - Terminal 2 and test box socket 16
  - Terminal 4 and test box socket 17

  Resistance maximum 1 5 ohms (Ω)
- Additionally, check 4-pin connector terminals for short circuit to one another

  Terminal 4 and test box socket 16

  Specification ∞ ohms (Ω)

- Set multimeter to voltage measurement range

- Check 4-pin connector terminals for short circuit to battery positive (B) according to wiring diagram

  - Terminal 2 and vehicle Ground (G D)

  - Terminal 4 and vehicle Ground (G D)

  Specification 0 volts

If no wiring malfunction is detected

- Replace Mass Air Flow (MAF) sensor -G70-

- Read readiness code ⇒ Page 01-33 If DTC memory has been erased, repair must be verified via appropriate display group ⇒ Page 01-35 , Readiness code, creating

T rottle al e control module - 338-, c ec ing

Note:

If the Throttle valve control module -J338- is removed and installed or replaced, "Basic Setting" function 04 must be initiated for matching of system components ⇒ *Page 24-8*

Special tools, testers and au iliary items

- VAG 1551/1552 scan tool with VAG 1551/3 adapter cable
- VAG 15 8/18 test box
- Multimeter (Fluke 83 or e uivalent)
- Connector test kit V 15 4
- iring diagram

C ec ing oltage supply

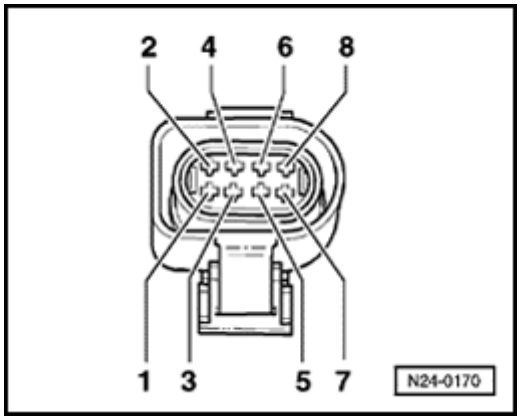

- Separate 8-pin connector to Throttle valve control module -J338-
- Connect multimeter using test leads from V 15 4 to measure voltage at terminals 3 and connector
- Switch ignition on

  Specification 0-14 5 volts

- Connect multimeter using adapter cables fro V 15 4 to measure voltage at terminals 4 a 7 of connector

  Specification 4 0-6 0 volts

- Switch ignition off

If the specifications are not attained

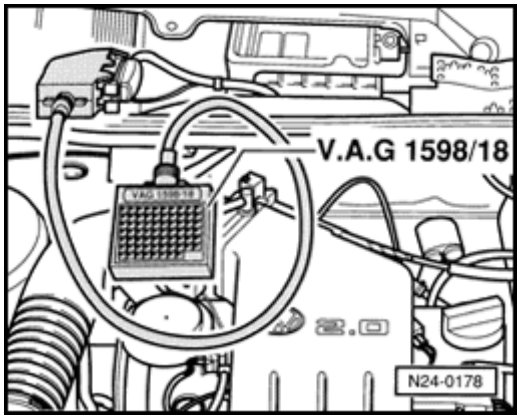

- Connect VAG 15 8/18 test box to ECM wirir harness

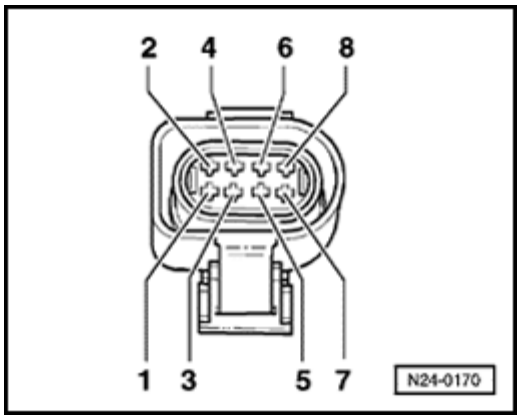

- Check wiring between test box and 8-pin connector for open circuit according to wiring diagram
  - Terminal 3 and test box socket 10
  - Terminal 4 and test box socket 41
  - Terminal 7 and test box socket 33

  Resistance maximum 1 5 ohms (Ω)

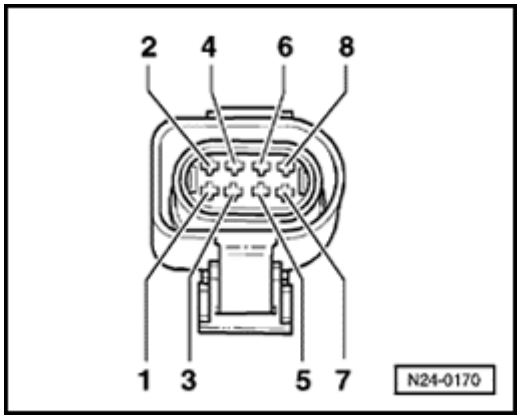

- Check wiring at 8-pin connector for short circuit to each other
  - Terminal 7 and test box socket 10
  - Terminal 7 and test box socket 41
  - Terminal 4 and test box socket 33

  Specification ∞ ohms (Ω)
- Reconnect connector

If no wiring malfunction is detected

- Replace Engine Control Module (ECM) -J220-
- Read readiness code ⇒ Page 01-33 If DTC memory has been erased, repair must be verified via appropriate display group ⇒ Page 01-35 , Readiness code, creating

C ec ing Closed T rottle osition (CT) switc

- Engine running at idle
- Connect VAG 1551/1552 scan tool and select Engine Electronics address word 01 ⇒ Page 01-7

Rapid data transfer **EL**

Select function

Indicated on display

- Press buttons -0- and -8- to select Read Measuring Value Block function 08 and press - - button to confirm input

Read Measuring Value Bloc EL

Input display group num er

Indicated on display

- Press buttons -0-, -0- and -5- for display group 005 and press - - button to confirm input

Read Measuring Value Bloc 5 →

1 2 3 4

Indicated on display (1-4 = Display fields)

- Check closed throttle position switch (display field 4)

	Display fields			
	1	2	3	**4**
Display group 005: General engine data				
Display	xxx RPM	xx xx ms	xxx km/h	**Te t**
Indicated	Engine speed	Engine load	Vehicle speed	**Operating modes**
orking range	800 - 6000 RPM	0 00 - 25 00 ms	-	**-**
Specification	800 - 1100 RPM	1 00 - 3 00 ms	0 km/h	**T rottle al e closed idling** **T rottle al e slig tly open partial load**
	-	-	-	**If specification is not attained ⇒ age 24-73 , continuation**

Continuation

- Switch ignition off

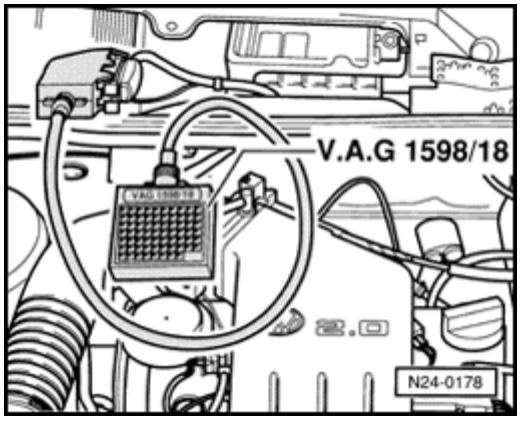

- Connect VAG 15 8/18 test box to ECM wiring harness
- ith throttle valve closed connect multimeter to measure resistance at test box sockets 10 and 33

  Specification maximum 5 0 ohms (Ω)
- Slowly open throttle

  Specification ∞ ohms (Ω)

If the specifications are not attained

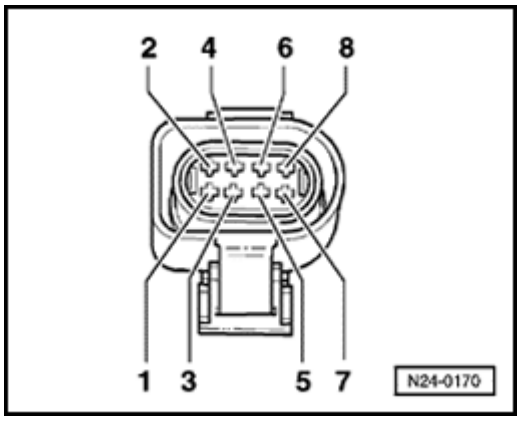

- Separate 8-pin connector to Throttle valve control module -J338-
- Check wiring between test box and 8-pin connector for open circuit according to wiring diagram
  - ♦ Terminal 3 and test box socket 10
  - ♦ Terminal 7 and test box socket 33

  Resistance maximum 1 5 ohms (Ω)

- Check wiring at 8-pin connector for short circuit between terminal 7 and test box socket 10

  Specification ∞ ohms (Ω)

- Reconnect connector

If no wiring malfunction is detected

- Replace Throttle valve control module -J338-

- Read readiness code ⇒ Page 01-33 If DTC memory has been erased, repair must be verified via appropriate display group ⇒ Page 01-35 , Readiness code, creating

C ec ing T rottle osition (T) actuator and T rottle osition (T) sensor

Test conditions

- Coolant temperature at least 80 °C (176 °F)

Test se uence

- Engine running at idle

- Connect VAG 1551/1552 scan tool and select Engine Electronics address word 01 ⇒ Page 01-7

Rapid data transfer	**EL**	⮜	Indicated on display
Select function			

- Press buttons -0- and -8- to select Read Measuring Value Block function 08 and press - - button to confirm input

Read Measuring Value Bloc EL

Input display group num er

Indicated on display

- Press buttons -0-, -3- and -7- for display group 037 and press - - button to confirm input

Read Measuring Value Bloc 37 →

1 2 3 4

Indicated on display (1-4 = Display fields)

- Check specifications for idle control (display field 1-4)

	Display fields			
	1	2	3	4
Display group 037: Idle control				
Display	**R M**	**R M**	**.**	**. g/s**
Indicated	**Engine speed**	**Engine speed specification**	**Idle control**	**Mass air flow**
orking range	**800 - 6000 R M**	**-**	**-16.0 to 16.0**	**0.0 - 20.0 g/s**
Specification	**800 - 880 R M**	**840 R M**	**-4.0 to 4.0**	**2.5 - 4.5 g/s**
	If specification is not attained ⇒ age 24-79 , continuation		**If specification is not attained ⇒ age 24-77 , e aluating display group 037**	**If specification is not attained ⇒ age 24-79 , continuation**

- Press -C- button

- Press buttons -0-, -3- and -6- for display group number 036 and press - - button to confirm input

Read Measuring Value Bloc 36 →

1 2 3 4

Indicated on display (1-4 = Display fields)

- Check specifications for idle control (display field 2 and 3)

	Display fields			
	1	2	3	4
Display group 036: Idle control				
Display	xx x ∠°	**. g/s**	**. g/s**	-
Indicated	Throttle valve angle	**Mass air flow adaptation alue at idle**	**Mass air flow adaptation alue wit dri ing range selected**	-
orking range	0 0 - 0 0 ∠°	**-1.70 to 1.70 g/s**	**-1.70 to 1.70 g/s**	-
Specification	3 0 - 7 0 ∠°	**-0.50 to 0.50 g/s**	**-0.40 to 0.40 g/s**[1)]	-
	-	**If specification is not attained ⇒ age 24-78 , e aluating display group 036**		-

[1)] On vehicles with manual transmission 0 is always displayed

E aluating display group 037

Display group 037 Display field 3	Possible malfunction cause	Malfunction elimination
Idle control in range 4 0 to 16 0	♦ Load increased (electrical consumers switched on)	- Switch off electrical consumers
-4 0 to -16 0	♦ nmetered air behind throttle valve (also note display group 036, display fields 2 and 3)	- Check intake air system for leaks (unmetered air) ⇒ Page 24-125 - Check exhaust system for leaks ⇒ *Repair Manual, 2.0 Liter 4-Cyl. 2V Engine Mechanical, Engine Code(s): ABA m.y. 1995 - 1997, Repair Group 26*
Constant 0 0 [1]	♦ iring open circuit	- ⇒ Page 24-7 , continuation
Constant - 1 5 [1]	♦ Short circuit to Ground (G D)	

[1] Value remains constant also during longer idling phase

E aluating display group 036

Display group 036 Display field 2	Possible malfunction cause	Malfunction elimination
Mass air flow adaptation value 0 50 to 1 70	♦ Load increased (electrical consumers switched on)	- Switch off electrical consumers
-0 50 to -1 70	♦ nmetered air behind throttle valve	- Check intake air system for leaks (unmetered air) ⇒ Page 24-125 - Check exhaust system for leaks ⇒ *Repair Manual, 2.0 Liter 4-Cyl. 2V Engine Mechanical, Engine Code(s): ABA m.y. 1995 - 1997, Repair Group 26*
Display field 3	Possible malfunction cause	Malfunction elimination
Mass air flow adaptation value 0 40 to 1 70	♦ Load increased (electrical consumers switched on)	- Switch off electrical consumers
-0 40 to -1 70	♦ nmetered air behind throttle valve	- Check intake air system for leaks (unmetered air) ⇒ Page 24-125 - Check exhaust system for leaks ⇒ *Repair Manual, 2.0 Liter 4-Cyl. 2V Engine Mechanical, Engine Code(s): ABA m.y. 1995 - 1997, Repair Group 26*

Continuation

- Switch ignition off

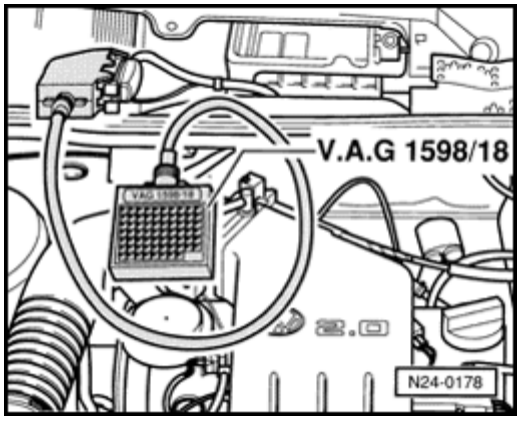

- Connect VAG 15 8/18 test box to ECM wiring harness
- Switch ignition on
- ith throttle closed connect multimeter to measure resistance at test box sockets 27 and 53

  Specification 3-200 ohms (Ω)

If the specification is not attained

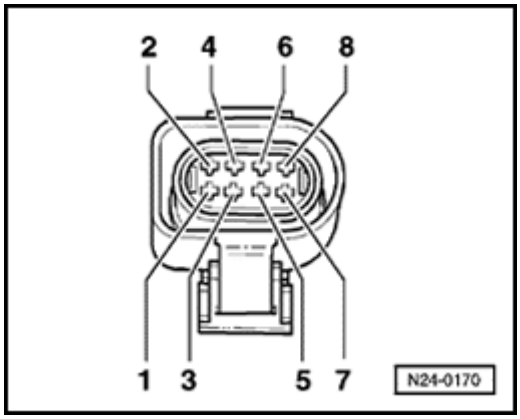

- Disconnect 8-pin connector from Throttle valve control module -J338-
- Repeat resistance measurements of throttle valve control module at terminals 1 2

  Specification 3-200 ohms (Ω)

If the specification is not attained

- Replace Throttle valve control module -J338-

If the specification is attained

- Check wiring between test box and 8-pin connector for open circuit according to wiring diagram

  - Terminal 1 and test box socket 27
  - Terminal 2 and test box socket 53
  - Terminal 7 and test box socket 33
  - Terminal 8 and test box socket 62

  Resistance maximum 1 5 ohms (Ω)

- Check wiring at 8-pin connector for short circuit to each other according to wiring diagram

  - Terminal 1 and test box socket 53
  - Terminal 1 and test box socket 62
  - Terminal 1 and test box socket 33
  - Terminal 2 and test box socket 33
  - Terminal 2 and test box socket 62
  - Terminal 7 and test box socket 62

  Specification ∞ ohms (Ω)

- Read readiness code ⇒ Page 01-33 If DTC memory has been erased, repair must be verified via appropriate display group ⇒ Page 01-35 , Readiness code, creating

C ec ing T rottle osition (T) sensor

- Connect VAG 1551/1552 scan tool and select Engine Electronics address word 01 ⇒ Page 01-7 Ignition must be switched on but engine not running

Rapid data transfer **Select function**	**EL**	⮜	Indicated on display - Press buttons -0- and -8- to select Read Measuring Value Block function 08 and press - - button to confirm input
Read Measuring Value Bloc **Input display group num er**	**EL**	⮜	Indicated on display - Press buttons -0-, -0- and -3- for display group 003 and press - - button to confirm input
Read Measuring Value Bloc **1 2 3 4**	**3** →	⮜	Indicated on display (1-4 = Display fields) - Check TP sensor specification (display field 3)

	Display fields			
	1	2	3	4
Display group 003: Load registration 1				
Display	xxx RPM	xx x g/s	∠ °	xx x °C
Indicated	Engine speed	Mass air flow	**T rottle al e angle**	Intake air temperature
orking range	800 - 6000 RPM	-	**0 - 90** ∠ °	-46 5 to 141 0
Specification	0 RPM	-	**3 - 7** ∠ °	Approx ambient temperature
	-	-	**If specification is not attained** ⇒ **age 24-83** **, e aluating display group 003**	-

- Slowly open throttle valve and watch angle display in display field 3

  - Value must increase uniformly over complete range

- Press → button

- Press buttons -0- and -6- to select End Output function 06 and press - - button to confirm input

- Switch ignition off

Note:

The displayed value is dependent on the tolerances of the Throttle Position (TP) sensor and does not correspond to the actual opening angle. The maximum permissible displayed value is 90.0 ∠ ° .

If the value does not increase uniformly

- Replace Throttle valve control module -J338-

- Read readiness code ⇒ Page 01-33 If DTC memory has been erased, repair must be verified via appropriate display group ⇒ Page 01-35 , Readiness code, creating

E aluating display group 003

Display group 003 Display field 3	Possible malfunction cause	Malfunction elimination
0 0 ∠ °	♦ iring open circuit	- Check wiring ⇒ Page 24-84
0 ∠ °	♦ Short circuit to Ground (G D)	

C ec wiring

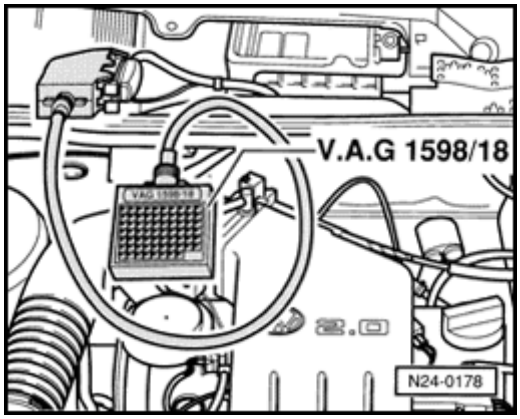

- Connect VAG 15 8/18 test box to ECM wiring harness
- Connect multimeter using test leads from V 15 4 to measure resistance at test box sockets 01 and 40 and check wiring for short circuit to Ground (G D)

  Specification ∞ ohms (Ω)
- Set multimeter to voltage measurement range
- Switch ignition on
- Check wiring for short circuit to positive (B) If necessary, note voltage value
- Switch ignition off

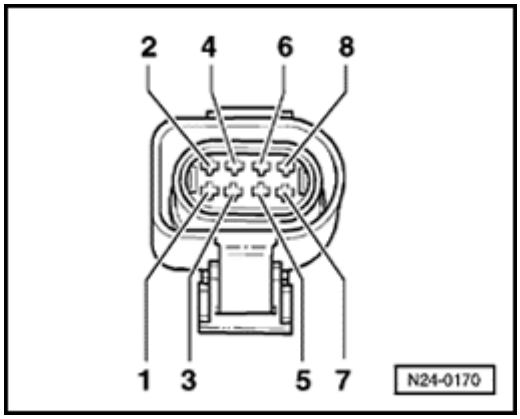

- Separate 8-pin connector to Throttle valve control module -J338-

Continuation if oltage is present:

If voltage of about 5 volts was present

- Connect multimeter using test leads from V 15 4 to measure resistance at test box sockets 40 and 41 and check for short circuits to each other

  Specification ∞ ohms (Ω)

If the voltage was approx battery voltage

- Check wiring at 8-pin connector terminal 5 for short circuit to battery positive (B) according to wiring diagram

Continuation if no oltage is present:

- Check wiring between test box and 8-pin connector for open circuit according to wiring diagram

  Terminal 5 and test box socket 40

  Resistance maximum 1 5 ohms (Ω)

If no wiring malfunction is detected

- Replace Throttle valve control module -J338-

- Read readiness code ⇒ Page 01-33 If DTC memory has been erased, repair must be verified via appropriate display group ⇒ Page 01-35 , Readiness code, creating

Basic setting, initiating

Note:

- *Only initiate "Basic Setting" function 04 when the Throttle valve control module -J338-, the Engine Control Module (ECM) -J220- or the engine has been replaced.*

- *Initiating basic setting matches the ECM to the throttle valve control module with the ignition switched on.*

- *If the basic setting is interrupted by the ECM, it can be, that the throttle valve is not at the mechanical idle stop due to contamination (e.g. coking) or an incorrectly adjusted accelerator cable. In this case the malfunction "Basic setting not performed" will be stored in DTC memory. Thoroughly clean the soiled area in throttle valve control module. The next time the ignition is switched on, basic setting will be automatically performed again.*

Special tools, testers and au iliary items

- VAG 1551/1552 scan tool with VAG 1551/3 adapter cable

Test conditions

- o malfunctions stored in Diagnostic Trouble Code (DTC) memory ⇒ Page 01-12 , checking DTC memory

Test se uence

- Connect VAG 1551/1552 scan tool and select Engine Electronics address word 01 ⇒ Page 01-7 Ignition must be switched on but engine not running

Rapid data transfer **Select function**	**EL**	⮜	Indicated on display - Press buttons -0- and -4- for the Basic Setting function 04 and press - - button to confirm input
Basic Setting **Input display group num er**	**EL**	⮜	Indicated on display - Press buttons -0-, - - and -8- for display group 0 8 and press - - button to confirm input
System in Basic Setting **1 2 3 4**	**98** →	⮜	Indicated on display (1-4 = Display fields) ***Note:*** *After confirming the display group 098 the Throttle Position (TP) actuator will be moved to the min., max. and then into the start position. The control module stores the appropriate throttle valve angle in the permanent memory. The throttle valve will then remain in the start position.*

- Check specifications (display fields 1-4)

	Display fields			
	1	2	3	4
Display group 098: Basic setting, t rottle al e control module				
Display	**. V**	**. V**	**Te t**	**Te t**
Indicated	**T rottle osition (T) sensor oltage**	**T rottle osition (T) actuator oltage**	**Operating mode**	**Basic setting status**
orking range	**0.000 - 5.000 V**	**0.000 - 5.000 V**	**-**	**-**
Specification	**-**	**-**	**Idle**	**AD . runs**
	4.000 - 5.000 V	**3.000 - 4.000 V**	**Idle**	**AD . O .** **(AD . ERROR appears if t e asic setting is not successful)**
	If specification is not attained ⇒ age 24-69 , c ec t rottle al e control module			

- ait at least 30 seconds before ending basic setting by pressing → button

- Press buttons -0- and -6- to select End Output function 06 and press - - button to confirm input

Engine Coolant Temperature (ECT) sensor -G62-, c ec ing

Special tools, testers and au iliary items

- VAG 1551/1552 scan tool with VAG 1551/3 adapter cable
- VAG 15 8/18 test box
- Multimeter (Fluke 83 or e uivalent)
- Connector test kit V 15 4
- iring diagram

Note:

If the engine is warmed to operating temperature with the vehicle stationary, and the time taken to reach operating temperature is too long, it can lead to DTC P0116 or P0125 being stored in DTC memory. In this case, erase DTC memory and bring engine to operating temperature during a test drive.

Test conditions

- Engine cold

Test se uence

- Connect VAG 1551/1552 scan tool and select Engine Electronics address word 01 ⇒ Page 01-7 Ignition must be switched on

Rapid data transfer **Select function**	**EL**	⮜	Indicated on display - Press buttons -0- and -8- to select Read Measuring Value Block function 08 and press - - button to confirm input
Read Measuring Value Bloc **Input display group num er**	**EL**	⮜	Indicated on display - Press buttons -0-, -0- and -1- for display group 001 and press - - button to confirm input
Read Measuring Value Bloc **1 2 3 4**	**1** →	⮜	Indicated on display (1-4 = Display fields) - Check specification for engine coolant temperature sensor (display field 2)

	Display fields			
	1	2	3	4
Display group 001: Idle test				
Display	xxxx RPM	**. °C**	xx x	xx x ∠ °
Indicated	Engine speed	**Engine coolant temperature**	Oxygen Sensor (O2S) control	Ignition angle
orking range	800 - 6000 RPM	**-46.5 to 141.0 °C**	-25 0 to 25 0	0 0 - 50 0 ∠ °
Specification	0 RPM	**Appro . am ient temperature**[1)]	The value must fluctuate at least 3 in range -5 0 to 5 0	2 0 - 15 0 ∠ °
	-	**If specification is not attained ⇒ age 24-92 , e aluating display group 001**	-	-

[1)] If a temperature is displayed which deviates greatly from the ambient temperature of the sensor, check sensor wiring for resistance/open circuit

Continuation:

- Start engine and run at idle speed

  - The temperature value must increase uniformly

If the specification is not attained

- Replace Engine Coolant Temperature (ECT) sensor -G62-

WARNING!

The cooling system is pressurized when the engine is warm. When opening the expansion tank, wear gloves and other appropriate protection, cover the cap with a cloth, and open carefully to relieve system pressure slowly.

- Press → button

- Press buttons -0- and -6- to select End Output function 06 and press - - button to confirm input

- Switch ignition off

Notes:

- *Display on VAG 1551 scan tool jumps by 1.5 °C.*

- *If irregular engine running occurs in certain temperature ranges and the temperature value does not increase without interruption, the temperature signal is temporarily interrupted and the sensor must be replaced.*

E aluating display group 001		
Display group 001		
Display field 2	Possible malfunction cause	Malfunction elimination
Approx -46 6 °C	♦ iring open circuit or short circuit to positive (B)	- Check wiring ⇒ Page 24- 3
Approx 141 0 °C	♦ Short circuit to Ground (G D)	

C ec ing wiring

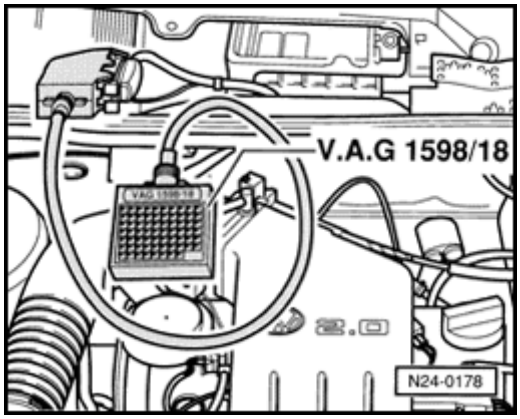

- Connect VAG 15 8/18 test box to ECM wiring harness

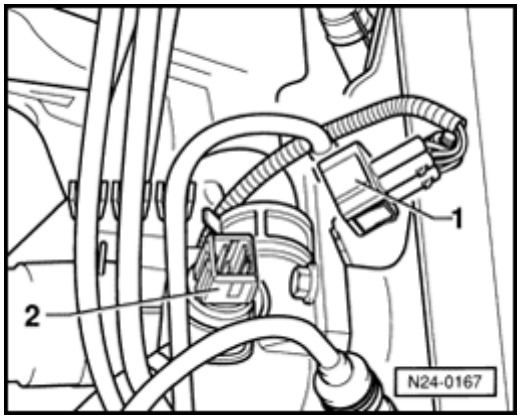

- Disconnect 4-pin connector -1- from ECT sensor -G62- -2-

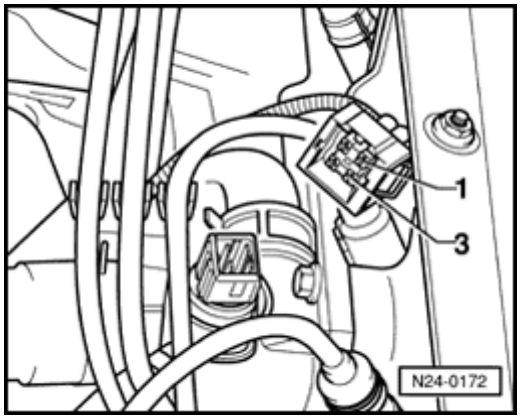

- Check wiring between test box and 4-pin connector for open circuit according to wiring diagram
  - Terminal 1 and test box socket 33
  - Terminal 3 and test box socket 14

  Resistance maximum 1 5 ohms (Ω)
- Check wiring between test box and 4-pin connector terminal 3 for short circuit to terminal 1 or to Ground (G D), according to wiring diagram

r Terminal 3 and test box socket 33

r Terminal 3 and vehicle Ground (G D)

Specification ∞ ohms (Ω)

- Additionally, check both wires for short circuit to battery positive (B)
  Specification ∞ ohms (Ω)

If no malfunction in wiring is detected

- Perform resistance measurement at ECT sensor -G62- terminals 1 and 3, resistance values ⇒ Page 24-18 , ⇒ Fig 1

If the specification is not attained

- Replace ECT sensor -G62-
- Read readiness code ⇒ Page 01-33 If DTC memory has been erased, repair must be verified via appropriate display group ⇒ Page 01-35 , Readiness code, creating

Inta e Air Temperature (IAT) sensor - G72-, c ec ing

Special tools, testers and au iliary items

- VAG 1551/1552 scan tool with VAG 1551/3 adapter cable
- VAG 15 8/18 test box
- Multimeter (Fluke 83 or e uivalent)
- Connector test kit V 15 4
- iring diagram
- Chilling spray (commercially available)

Test se uence

- Connect VAG 1551/1552 scan tool and select Engine Electronics address word 01 ⇒ Page 01-7 Ignition must be switched on

Rapid data transfer **Select function**	**EL**	⮜	Indicated on display - Press buttons -0- and -8- to select Read Measuring Value Block function 08 and press - - button to confirm input
Read Measuring Value Bloc **Input display group num er**	**EL**	⮜	Indicated on display - Press buttons -0-, -0- and -3- for display group 003 and press - - button to confirm input

Read Measuring Value Bloc 3 → ⮜ Indicated on display (1-4 = Display fields)

1 2 3 4

- Check specification for intake air temperature sensor (display field 4)

	Display fields			
	1	2	3	4
Display group 003: Load registration 1				
Display	xxx RPM	xx x g/s	xxx ∠ °	**. ° C**
Indicated	Engine speed	Mass air flow	Throttle valve angle	**Inta e air temperature**
orking range	800 - 6000 RPM	0 0 - 25 0 g/s	0 - 0 ∠ °	**-46.5 to 141.0**
Specification	0 RPM	-	3 - 7 ∠ °	**Appro . am ient temperature[1)]**
	-	-	-	**Continue ⇒ age 24-97 , e aluating display group 003**

[1)] If a temperature is displayed which deviates greatly from the ambient temperature of the sensor, check sensor wiring for resistance/open circuit

E aluating display group 003

Display group 003 Display field 4	Possible malfunction cause	Malfunction elimination
-46 5 °C	♦ iring open circuit or short circuit to positive (B)	- Check wiring ⇒ Page 24- 7
141 0 °C	♦ Short circuit to Ground (G D)	
Approx ambient temperature	♦ Signal periodically interrupted	- Check IAT sensor ⇒ Page 24- , continuation at ambient temperature

C ec ing wiring

- Switch ignition off

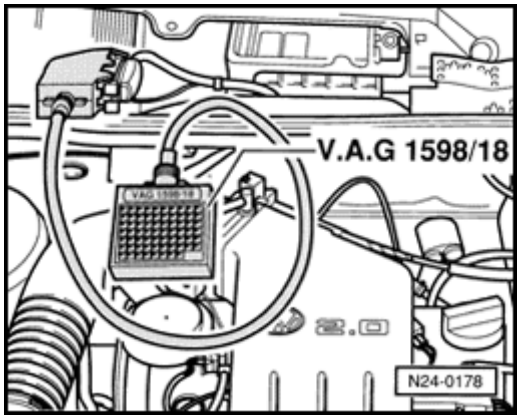

- Connect VAG 15 8/18 test box to ECM wiring harness

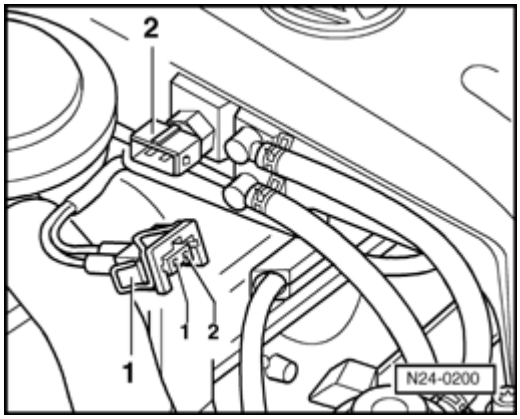

- Disconnect 2-pin connector -1- from Intake Air Temperature (IAT) sensor -G72- -2-
- Check wiring between test box and 2-pin connector for open circuit according to wiring diagram
  - Terminal 1 and test box socket 36
  - Terminal 2 and test box socket 33

  Resistance maximum 1 5 ohms (Ω)
- Check wiring between test box and 2-pin connector terminal 2 for short circuit to wire terminal 1 or to vehicle Ground (G D), according to wiring diagram
  - Terminal 2 and test box socket 36
  - Terminal 2 and vehicle Ground (G D)

  Specification ∞ ohms (Ω)
- Additionally, check both wires for short circuit to battery positive (B)

  Specification ∞ ohms (Ω)

If no malfunction in wiring is detected

- Measure resistance at IAT sensor -G72- terminals 1 and 2, resistance values ⇒ Page 24-18 , ⇒ Fig 1

If the specification is not attained

- Replace IAT sensor -G72-

Continuation of c ec w en display am ient temperature

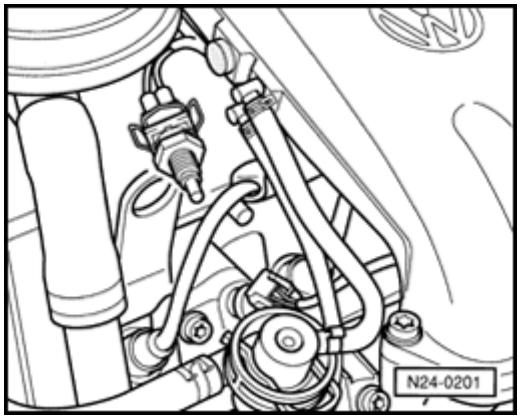

- Remove IAT sensor (harness connector remains connected)
- Read intake air temperature value in display field 4
- Spray sensor with a commercially available chilling spray and at same time observe temperature value

• Temperature value must decrease

If the specification is not attained

- Replace IAT sensor -G72-
- Read readiness code ⇒ Page 01-33 If DTC memory has been erased, repair must be verified via appropriate display group ⇒ Page 01-35 , Readiness code, creating

Engine speed (R M) sensor - G28-, c ec ing

Special tools, testers and au iliary items

- VAG 15 8/18 test box
- Multimeter (Fluke 83 or e uivalent)
- Connector test kit V 15 4
- iring diagram

Test se uence

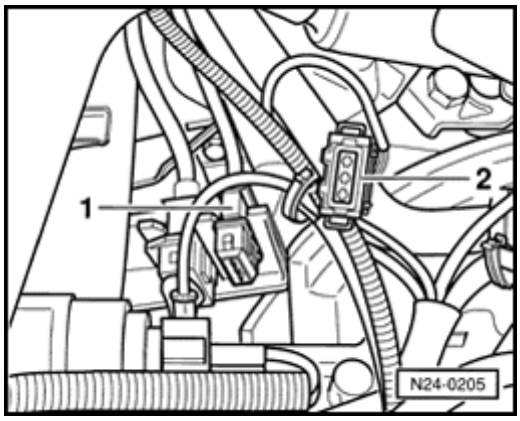

- Disconnect 3-pin connector to engine speed sensor -1-

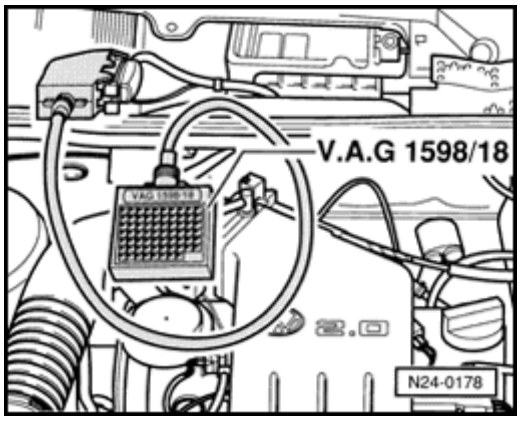

- Connect VAG 15 8/18 test box to ECM wiring harness

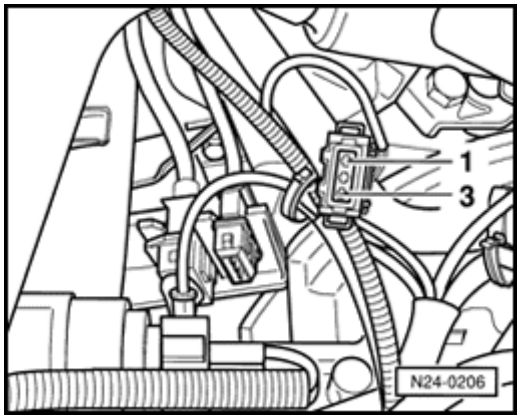

- Check wiring between test box and 3-pin connector for open circuit using wiring diagram
  - Terminal 1 and test box socket 67
  - Terminal 2 and test box socket 68
  - Terminal 3 and test box socket 56

  Resistance maximum 1 5 ohms (Ω)
- Additionally, check wiring for short circuits to one another
  - Terminal 2 and test box socket 56
  - Terminal 1 and test box socket 56
  - Terminal 1 and test box socket 68

  Specification ∞ ohms (Ω)

If no wiring malfunction is detected

- Replace engine speed (RPM) sensor -G28-
- Read readiness code ⇒ Page 01-33 If DTC memory has been erased, repair must be verified via appropriate display group ⇒ Page 01-35 , Readiness code, creating

Speedometer Ve icle Speed Sensor (VSS) -G22- signal, c ec ing

Special tools, testers and au iliary items

- VAG 1551/1552 scan tool with VAG 1551/3 adapter cable
- Multimeter (Fluke 83 or e uivalent)
- Connector test kit V 15 4
- iring diagram

Test conditions

- Speedometer OK, checking

⇒ *Repair Manual, Electrical Equipment, Repair Group 90*

Note:

To check the speed sensor signal the vehicle must be test driven. To do this a second person is necessary.

Test se uence

- Engine running at idle

- Connect VAG 1551/1552 scan tool and select Engine Electronics address word 01 ⇒ Page 01-7

Rapid data transfer **EL** Indicated on display

Select function

- Press buttons -0- and -8- to select Read Measuring Value Block function 08 and press - - button to confirm input

Read Measuring Value Bloc EL

Input display group num er

Indicated on display

- Press buttons -0-, -0- and -5- for display group 005 and press - - button to confirm input

Read Measuring Value Bloc 5 →

1 2 3 4

Indicated on display (1-4 = Display fields)

- Carry out test drive and observe display in display field 3 (second technician necessary)

	Display fields			
	1	2	3	4
Display group 005: General engine data				
Display	xxx RPM	xx xx ms	**m/**	Idle
Indicated	Engine speed	Engine load	**Dri ing speed**	Operating modes
orking range	800 - 6000 RPM	0 00 - 25 00 ms	**-**	-
Specification	-	-	**Appro . dri ing speed**	-
	-	-	**If no dri ing speed is displayed ⇒ age 24-104 , continuation**	

- Press → button
- Press buttons -0- and -6- to select End Output function 06 and press - - button to confirm input
- Switch ignition off

Continuation

If no speed is indicated

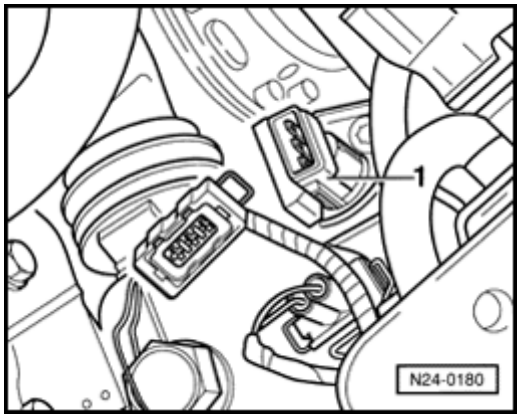

- Disconnect 3-pin connector from vehicle speed sensor -1-
- Switch ignition on

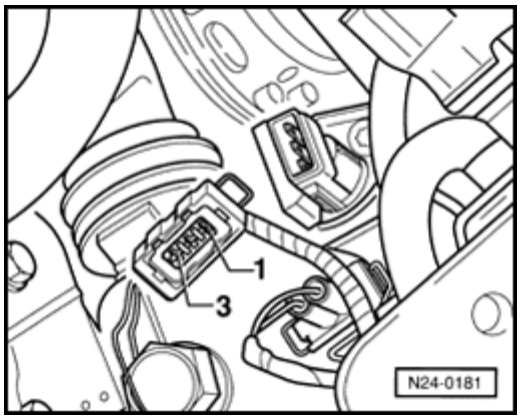

- Connect multimeter using test leads from V 15 4 to measure voltage at terminals 1 and 3 of connector

  Specification -14 5 volts
- Switch ignition off
- Reconnect connector

If no voltage was present

- Check wiring according to wiring diagram

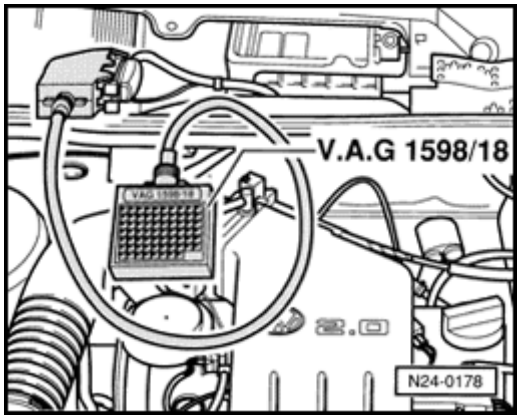

If voltage was -14 5 volts

- Connect VAG 15 8/18 test box to ECM wiring harness
- Check wiring between central electrical panel and test box socket 65 for open circuit according to wiring diagram

  Resistance maximum 1 5 ohms (Ω)
- Connect multimeter using test leads from V 15 4 to measure voltage at sockets 56 and 65
- Switch ignition on
- Lift left front wheel and rotate by hand or push vehicle
  - Voltage value must fluctuate between 0 and at least 4 volts

If no wiring malfunction is detected and voltage was present between terminals 1 and 3

- Replace Speedometer Vehicle Speed Sensor (VSS) -G22-
- Read readiness code ⇒ Page 01-33 If DTC memory has been erased, repair must be verified via appropriate display group ⇒ Page 01-35 , Readiness code, creating

Engine Control Module (ECM) oltage supply, c ec ing

Special tools, testers and au iliary items

- VAG 1551/1552 scan tool with VAG 1551/3 adapter cable
- VAG 15 8/18 test box
- Multimeter (Fluke 83 or e uivalent)
- Connector test kit V 15 4
- iring diagram

Test se uence

- Connect VAG 1551/1552 scan tool and select Engine Electronics address word 01 ⇒ Page 01-7 Ignition must be switched on

Rapid data transfer **Select function**	**EL**	⮜	Indicated on display - Press buttons -0- and -8- to select Read Measuring Value Block function 08 and press - - button to confirm input
Read Measuring Value Bloc **Input display group num er**	**EL**	⮜	Indicated on display - Press buttons -0-, -0- and -2- for display group 002 and press - - button to confirm input

Read Measuring Value Bloc 2 →

1 2 3 4

Indicated on display (1-4 = Display fields)

- Check battery voltage (display field 3)

	Display fields			
	1	2	3	4
Display group 002: General engine data				
Display	xxxx RPM	xx xx ms	.	xxx x °C
Indicated	Engine speed	Fuel injection period	**Battery oltage**	Fuel tank ventilation
orking range	800 - 6000 RPM	0 00 - 25 00 ms	**0.000 - 16.500 V**	-
Specification	0 RPM	-	**12.000 - 14.500 V**	-
	-	-	**If specification is not attained ⇒ age 24-108 , e aluating display group 002**	-

- Press → button
- Press buttons -0- and -6- to select End Output function 06 and press - - button to confirm input

E aluating display group 002

Display group 002 Display field 3	Possible malfunction cause	Malfunction elimination
If no display appears on VAG 1551	♦ Fuse 15 faulty	- Replace fuse
	♦ iring open circuit	- Check voltage supply terminal 15 ⇒ Page 24-10
If the value displayed fluctuates between 12 0 - 14 5 V	♦ Loose connection	- Check voltage supply terminal 30 ⇒ Page 24-10
0 0 - 12 0 V	♦ Battery discharged/faulty ♦ Voltage regulator faulty	- Check battery - Check generator - Check voltage regulator
14 5 - 16 5 V	♦ Generator faulty ♦ Voltage regulator faulty	- Check generator - Check voltage regulator

C ec ing oltage supply terminal 30

- Switch ignition off

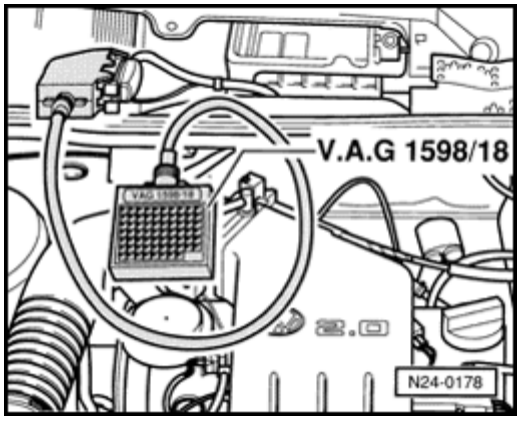

- Connect VAG 15 8/18 test box to ECM wiring harness
- Connect multimeter using test leads from V 15 4 to measure voltage at sockets 1 and 54

  Specification 12-14 5 volts

If the specification is not attained

- Check wiring according to wiring diagram

C ec ing oltage supply terminal 15

- Switch ignition off

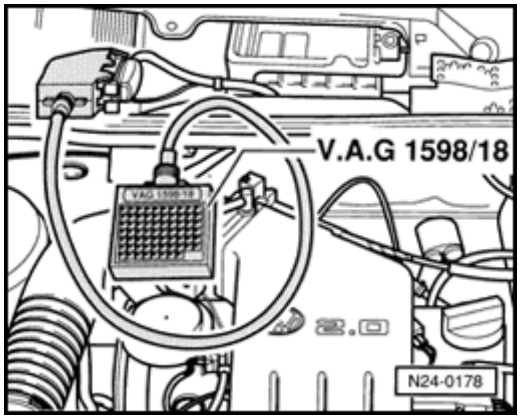

- Connect VAG 15 8/18 test box to ECM wiring harness
- Switch ignition on
- Connect multimeter using test leads from V 15 4 to measure voltage at sockets 1 and 23

  Specification 12-14 5 volts

If the specification is not attained

- Check wiring according to wiring diagram

Signal from automatic transmission, c ec ing

Special tools, testers and au iliary items

- VAG 1551/1552 scan tool with VAG 1551/3 adapter cable
- VAG 15 8/18 test box
- Multimeter (Fluke 83 or e uivalent)
- Connector test kit V 15 4
- iring diagram

Test se uence

- Engine running at idle

- Connect VAG 1551/1552 scan tool and select Engine Electronics address word 01 ⇒ Page 01-7

Rapid data transfer **Select function**	**EL**	⮜	Indicated on display - Press buttons -0- and -8- to select Read Measuring Value Block function 08 and press - - button to confirm input
Read Measuring Value Bloc **Input display group num er**	**EL**	⮜	Indicated on display - Press buttons -0-, -0- and -8- for display group 008 and press - - button to confirm input

Continuation

If the display does not read as described

Read Measuring Value Bloc **8** →

1 2 3 4

Indicated on display (1-4 = Display fields)

- Check signals from automatic transmission in display field 2

	Display fields			
	1	2	3	4
Display group 008: Signals to Engine Control Module (ECM)				
Display	xxxx RPM	**Te t**	Text	Text
Indicated	Engine speed	**Dri ing range status**	A/C status	A/C compressor status
orking range	800 - 6000 RPM	**-**	-	-
Specification	800 - 880 RPM	**and : E TRAL** **1, 2, 3 and D: O**	-	-
	-	**If specification is not attained** ⇒ **age 24-111 , continuation**	-	-

- Check wiring between ECM (terminals 07, 11, 18 and 21) and Transmission Control Module (TCM) according to wiring diagram

Signal from A/C compressor, c ec ing

Special tools, testers and au iliary items

- VAG 1551/1552 scan tool with VAG 1551/3 adapter cable
- VAG 15 8/18 test box
- Multimeter (Fluke 83 or e uivalent)
- Connector test kit V 15 4
- iring diagram

C ec conditions

- Function of A/C OK
- A/C switched off
- Interior of vehicle is at room temperature, above 15 °C (5 °F)
- o malfunctions stored in Diagnostic Trouble Code (DTC) memory ⇒ Page 01-12 , checking DTC memory

Test se uence

- Engine running at idle

- Connect VAG 1551/1552 scan tool and select Engine Electronics address word 01 ⇒ Page 01-7

Rapid data transfer **Select function**	**EL**	⮜	Indicated on display - Press buttons -0- and -8- to select Read Measuring Value Block function 08 and press - - button to confirm input
Read Measuring Value Bloc **Input display group num er**	**EL**	⮜	Indicated on display - Press buttons -0-, -0- and -8- for display group 008 and press - - button to confirm input
Read Measuring Value Bloc **1 2 3 4**	**8** →	⮜	Indicated on display (1 - 4 = Display fields) - Switch on A/C (lowest temperature and highest blower speed) - Check specifications for A/C (display fields 3 and 4)

	Display fields			
	1	2	3	4
Display group 008: Signals to Engine Control Module (ECM)				
Display	xxxx RPM	Text	**Te t**	**Te t**
Indicated	Engine speed	Driving range status	**A/C status**	**A/C compressor status**
orking range	800 - 6000 RPM	-	**-**	**-**
Specification	800 - 880 RPM [1)]	eutral	**A/C on: A/C-IG** **A/C off: A/C-LO**	**Compressor on: Compr. O** **Compressor off: Compr. OFF**
	-	-	**If specification is not attained** ⇒ **age 24-115** **, continuation**	

Note:

The A/C compressor will be switched off (Compr. OFF) when the ECM recognizes full load and the air conditioning is switched on (A/C-HIGH).

Continuation

If the display does not indicate as described

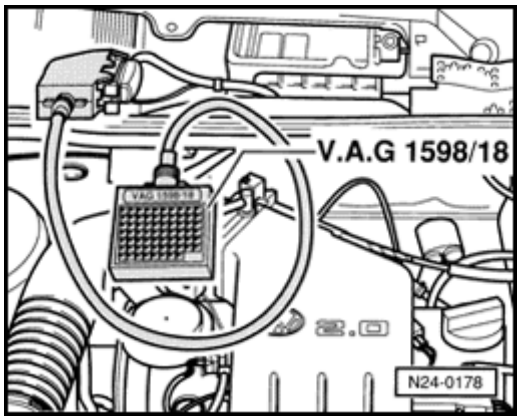

- Connect VAG 15 8/18 test box to ECM wiring harness
- Check wiring between test box sockets 37 and 3 respectively and A/C for open circuit according to wiring diagram

  Resistance maximum 1 5 ohms (Ω)

If the specification is not attained

- Check wiring according to wiring diagram

Fuel injectors, c ec ing

C ec ing acti ation

Check activation of fuel injectors ⇒ Page 01-7
output Diagnostic Test Mode (DTM)

Special tools, testers and au iliary items

- VAG 15 8/18 test box
- Multimeter (Fluke 83 or e uivalent)
- VAG 1527B voltage tester
- Connector test kit V 15 4
- iring diagram

C ec conditions

- Engine speed sensor OK
- Fuel pump relay OK

Test se uence

- Remove intake manifold, upper ⇒ Page 24-
  item 7

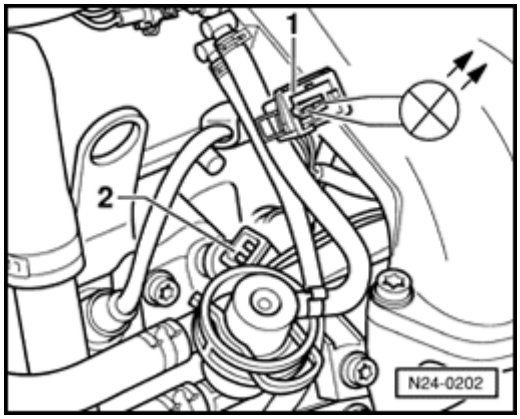

- Disconnect harness connector -1- from
  connection -2- and connect VAG 1527B volt
  tester with test leads from V 15 4 to termi
  of harness connector

- Disconnect harness connectors from fuel injectors 2-4

- Operate starter and check voltage supply for 1 cyl fuel injector

• LED must flicker

- Repeat check on fuel injectors 2-4

If the LED does not flicker

- Switch ignition off

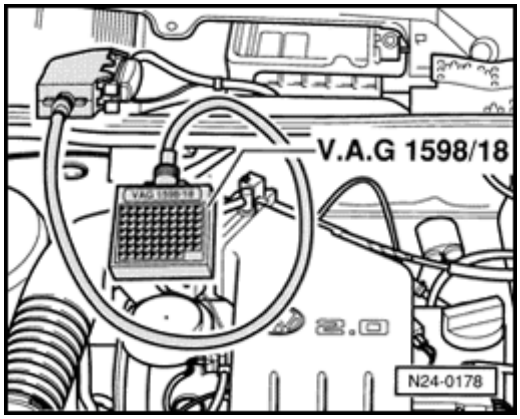

- Connect VAG 15 8/18 test box to ECM wirir harness

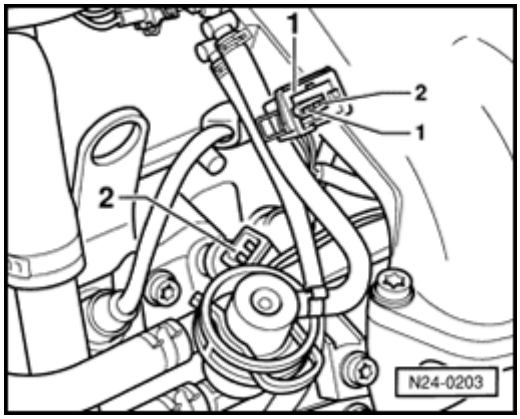

- Check wiring between test box and connectc for open circuit according to wiring diagram
  - o 1 cyl fuel injector terminal 2 and tes box socket 24
  - o 2 cyl fuel injector terminal 2 and tes box socket 25
  - o 3 cyl fuel injector terminal 2 and tes box socket 26
  - o 4 cyl fuel injector terminal 2 and tes box socket 02

  Resistance maximum1 5 ohms (Ω)

- Check wiring between fuel injector connecto terminal 1 and relay panel for open circuit according to wiring diagram

  Resistance maximum 1 5 ohms (Ω)

- Additionally, check wires for short circuit to c another

  Specification ∞ ohms (Ω)

C ec ing resistance of fuel injectors

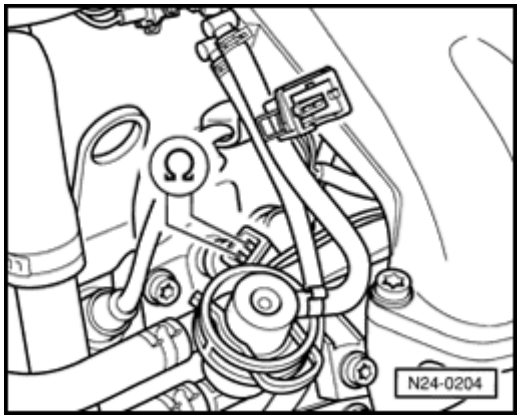

- Check resistance of fuel injectors individually

  Specification 15-20 ohms (Ω)

If the specification is not attained, replace fuel injector(s) as necessary

C ec ing spray pattern and c ec ing for lea s

WARNING!

- ***DO NOT smoke or work near heaters or o fire hazards when working on fuel systen***

- ***The fuel system is pressurized! Before loosening hose connections or opening t test connection, wrap a cloth around the connection. Then release pressure by slo disconnecting the hose/fitting.***

Special tools, testers and au iliary items

- Connector test kit V 15 4

- VAG 1630 digital potentiometer

- VAG 1602 fuel analyzer

Test se uence

- Remove intake manifold, upper ⇒ Page 24- item 7

- Remove fuel rail complete with fuel injectors Page 24-15 , Item 8

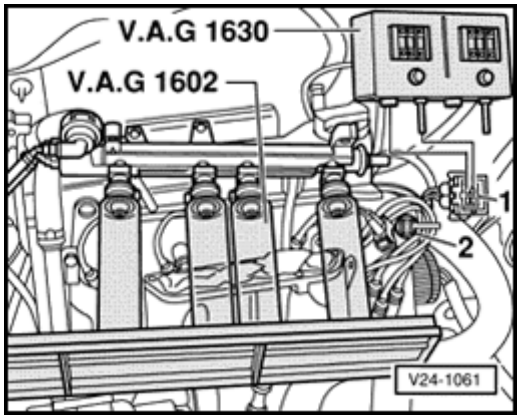

- Hold fuel injectors in VAG 1602 fuel analyze

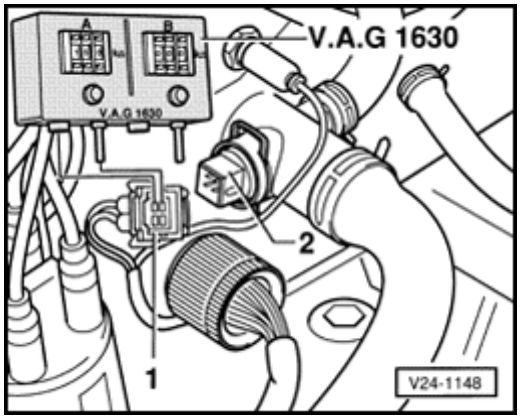

- Disconnect harness connector from Engine Coolant Temperature (ECT) sensor -G62-
- Set digital potentiometer VAG 1630 side A to 15 kΩ and using test leads from V 15 4 connect to terminals 1 and 3 of disconnected harness connector
- Disconnect harness connector from ignition coil
- Operate starter (second technician re uired)
  - Fuel injectors must pulsate and spray in accordance with firing order
- Switch ignition off and check fuel injectors for leaks
  - o more than 2 drops/minute may leak from each fuel injector

Note:

When installing the fuel injectors make sure that the O-rings are not damaged.

Fuel pressure regulator and residual pressure, c ec ing

The fuel pressure regulator controls the fuel pressure dependent upon intake manifold pressure

Special tools, testers and au iliary items

- VAG 1318 pressure tester
- VAG 1318/10 adapter
- VAG 1318/11 adapter
- VAG 1318/16 adapter

Test conditions

- Fuel pump delivery rate OK, checking

⇒ *Repair Manual, 2.0 Liter 4-Cyl. 2V Engine Mechanical, Engine Code(s): ABA m.y. 1995 - 1997, Repair Group 20*

Test se uence

WARNING!

- ***DO NOT smoke or work near heaters or o fire hazards when working on fuel systen***

- ***The fuel system is pressurized! Before loosening hose connections or opening t test connection, wrap a cloth around the connection. Then release pressure by slo disconnecting the hose/fitting.***

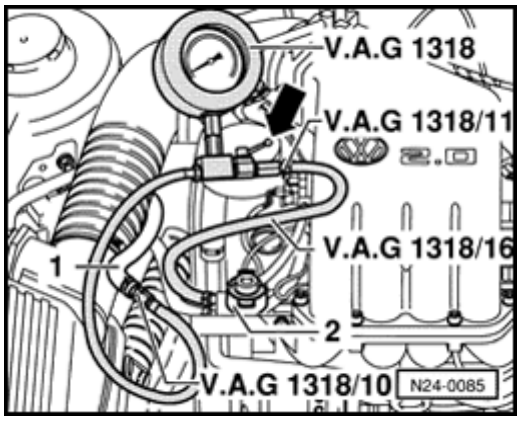

- Disconnect fuel supply line -1- from fuel rail and connect using adapter 1318/10 to press tester VAG 1318
- Connect pressure tester VAG 1318 to fuel ra 2- using adapter 1318/11 and 1318/16 Oper pressure tester shut-off valve, handle in dire of flow (arrow)
- Start engine and run at idle speed
- Check fuel pressure

  Specification approx 2 5 bar (36 3 psi)

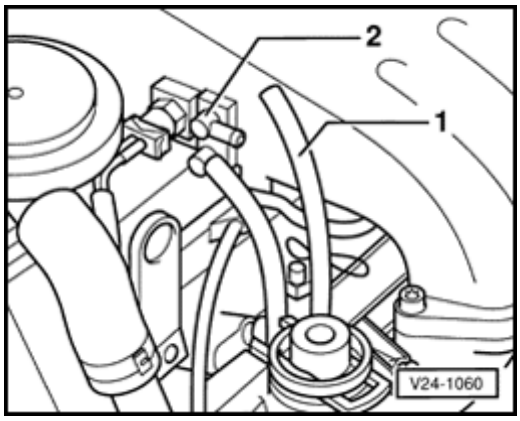

- Disconnect vacuum hose - 1- from connectic 2-
  - Fuel pressure must rise to approx 3 0 bar psi)
- Switch ignition off

- Check for leaks and residual pressure by watching pressure drop on gauge

  - After 10 minutes there must be a residual pressure of at least 2 bar (2 psi)

If the residual pressure drops below 2 bar (2 psi)

- Start engine and run at idle speed

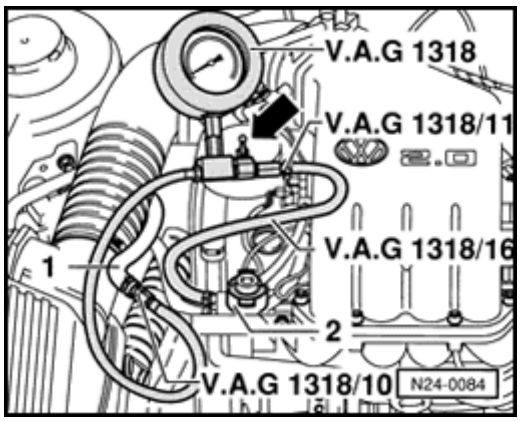

- After pressure has built up switch ignition off at same time close pressure tester VAG 131 shut-off valve, handle 0 ° to direction of flow (arrow)
- atch pressure drop on gauge

If the pressure drops again

- Check fuel pump check valve

⇒ *Repair Manual, 2.0 Liter 4-Cyl. 2V Engine Mechanical, Engine Code(s): ABA m.y. 1995 - 1997, Repair Group 20*

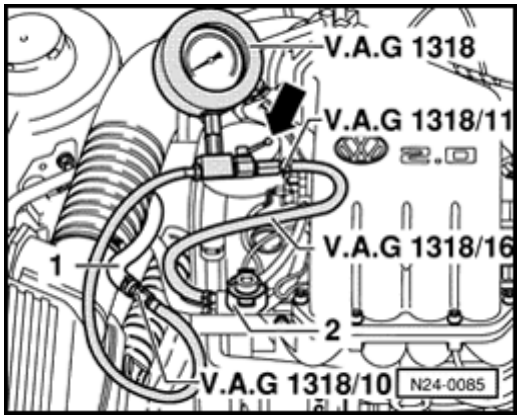

If the pressure does not drop

- Open pressure tester VAG 1318 shut-off valve, handle in direction of flow (arrow)
- Start engine and run at idle speed
- After pressure has built up switch ignition off and at same time clamp-off return line (with blue arrow) on fuel rail

If the pressure does not drop

- Replace fuel pressure regulator

If the pressure drops again

- Check hose connections, O-rings on fuel rail and fuel injectors for leaks
- Check pressure gauge for leaks

Inta e air system, c ec ing for lea s (outside air)

C ec ing wit engine lea detector spray G 001 800 A1

Special tools, testers and au iliary items

- VAG 1551/1552 scan tool with VAG 1551/3 adapter cable

- Engine leak detector spray G 001 800 A1

Note:

- *The vacuum in the intake system will cause the leak detector spray to be drawn in with the outside air. The leak detector spray reduces the ignitability of the mixture. This leads to a drop in engine speed and to a significant increase of the CO content.*

- *Observe the safety precautions listed on the container.*

Test se uence

- Engine running at idle

- Connect VAG 1551/1552 scan tool and select Engine Electronics address word 01 ⇒ Page 01-7

Rapid data transfer	**EL**	≺	Indicated on display
Select function			

- Press buttons -0- and -8- to select Read Measuring Value Block function 08 and press - - button to confirm input

Read Measuring Value Bloc EL

Input display group num er

Indicated on display

- Press buttons -0-, -0- and -1- for display group 001 and press - - button to confirm input

Read Measuring Value Bloc 1 →

1 2 3 4

Indicated on display (1-4 = Display fields)

- ote Oxygen Sensor (O2S) control in display field 3

	Display fields			
	1	2	3	4
Display group 001: Idle test				
Display	xxxx RPM	xxx x °C	.	xx x ∠°
Indicated	Engine speed	Engine temperature	**O2S control**	Ignition angle
orking range	800 - 6000 RPM	-	**-25.0 to 25.0**	0 0 - 40 0 ∠°
Specification	800 - 880 RPM	-	**T e alue must fluctuate at least 2 in range -5.0 to 5.0**	2 0 - 15 0 ∠°

- Systematically spray parts of intake system with engine leak detector spray

If the engine speed drops or the value displayed for O2S control changes

- Check area of intake system which has been sprayed and eliminate leaks

Inta e air pre eating, c ec ing

Special tools, testers and au iliary items

- Hand vacuum pump VAG 13 0

Test conditions

- Temperature regulating flap vacuum unit n leaking

C ec ing regulating flap

- Remove air cleaner upper section and take air filter element

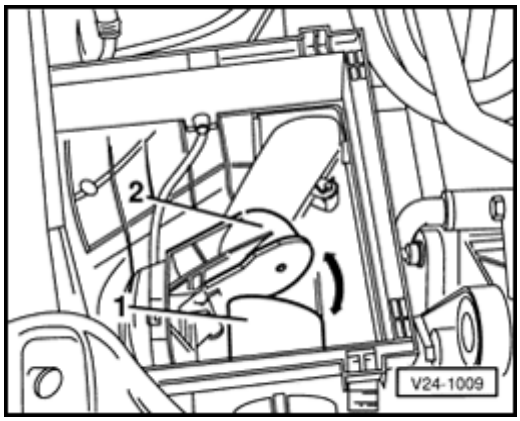

- Place air cleaner upper section so that regulating flap in the air cleaner lower sectio can be seen
- Disconnect vacuum hose from temperature regulator vacuum unit
- Connect vacuum hose -3- to hand vacuum pump VAG 13 0
- Operate pump and check freedom of movem of regulating flap and function of vacuum uni
  - Regulating flap must close off cold air intak 1-

C ec ing temperature regulator

- Connect vacuum hose -3- to temperature regulator (brass connecting hose or with not

- Start engine and run at idle speed

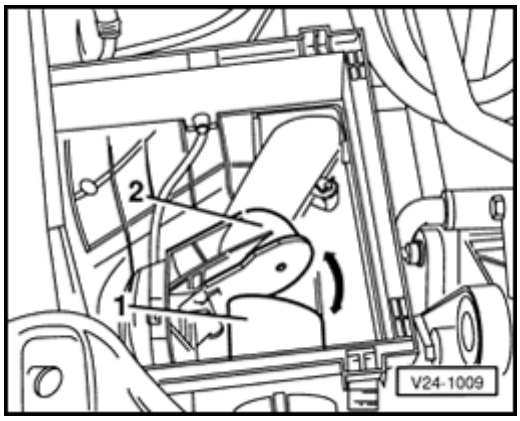

- Check position of regulating flap after maxim 20 seconds

Temperature of temperature regulator	Regulating flap position
Below 20 ° C (68 ° F)	Cold air intake -1 closed
Above 30 ° C (86 ° F)	arm air intake - closed
Between 20 ° and 30 ° C (68 ° and 86 ° F)	Between cold an warm air intake

Multiport fuel injection and ignition system

Ignition system components

Note:

- *Only components which specifically relate to the ignition system are dealt with here. For other components of the fuel injection and ignition system ⇒ Repair Group 24.*
- *The fuel injection and ignition system Engine Control Module (ECM) is equipped with On Board Diagnostic (OBD).*
- *Components marked with an asterisk (*) are checked via the On Board Diagnostic (OBD) program.*
- *Check Diagnostic Trouble Code (DTC) memory before carrying out repairs and troubleshooting ⇒ Page 01-12 .*

Safety precautions ⇒ Page 28-5

Technical data, spark plugs ⇒ Page 28-7

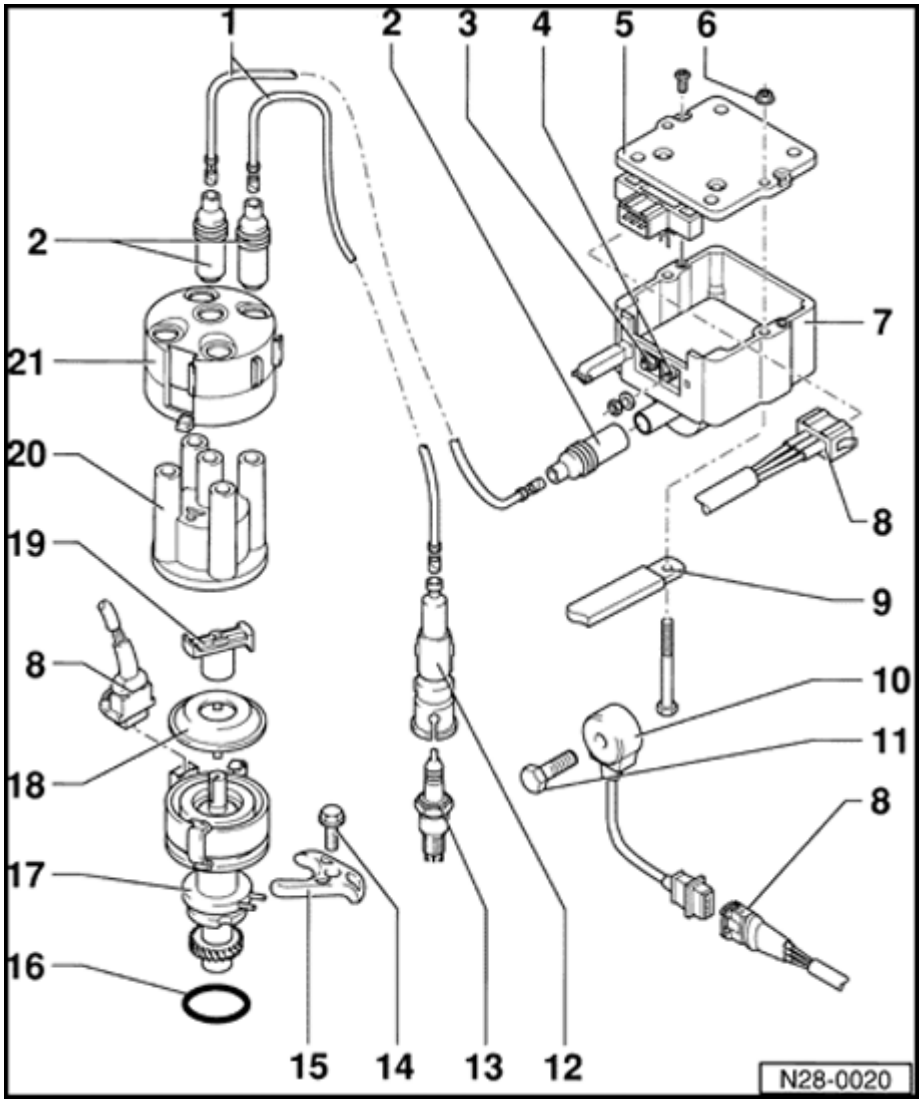

Ignition system, ser icing

Note:

Engine Control Module (ECM) - J220- with connector ⇒ Page 24-8 , item 12 .*

1 - Ignition wires

- Check for continuity

2 - Suppressor

- 0 6-1 4 kΩ

3 - Terminal 1

4 - Terminal 15

5 - Ignition coil power output stage - 157-

- Checking ⇒ Page 28-31

6 - 10 m (7 ft l)

7 - Ignition coil - 152-

- Checking ⇒ Page 28-30

8 - Connector

- 3-pin

9 - Ground (G D) strap

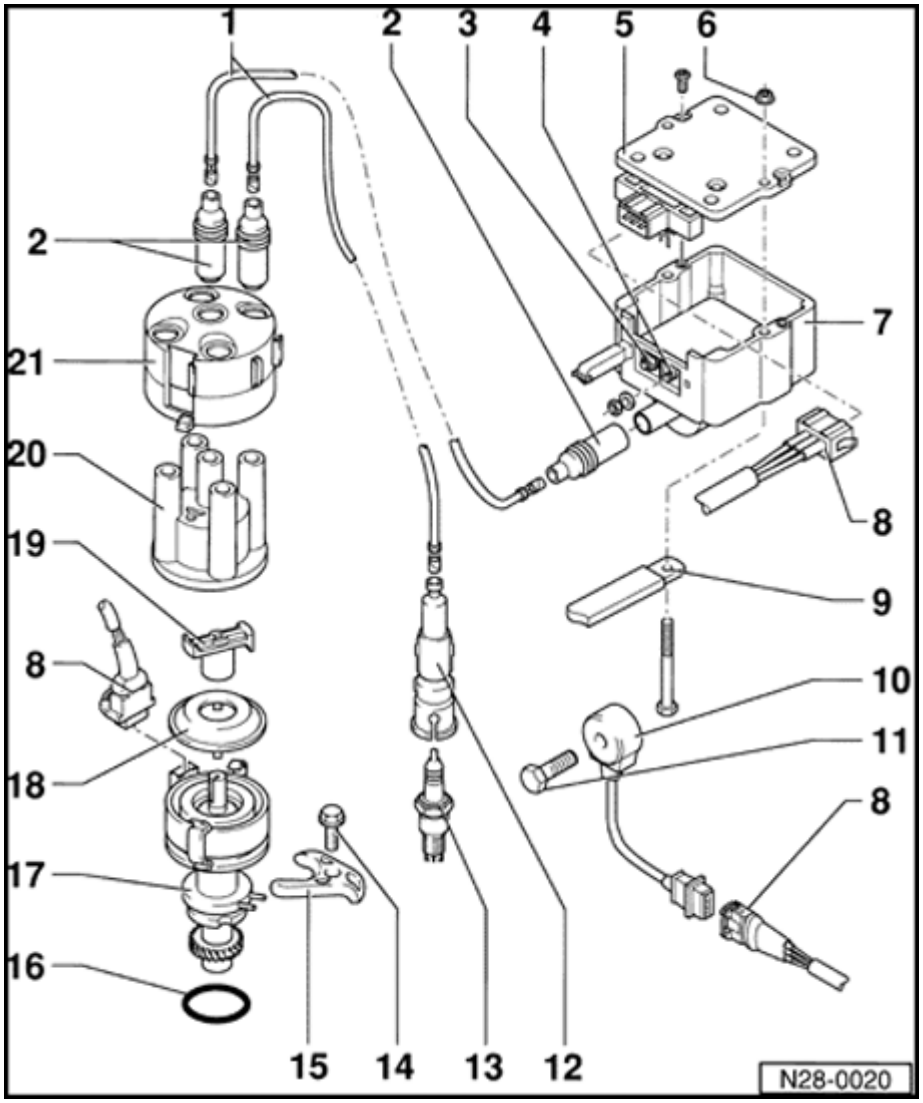

10 - noc Sensor (S) 1 - G61-

11 - 20 m (15 ft l)

- Tightening tor ue influences function of knock sensor

12 - Spar plug connector

- se 3277 when disconnecting and connecting
  - 4-6 kΩ

13 - Spar plug

- 30 m (22 ft lb)
- Remove and install with 3122B
- Type and electrode gap ⇒ Page 28-7

14 - 25 m (18 ft l)

15 - Clamp

16 - O-ring

- Replace

if damaged

17 - Cams aft osition (CM) sensor - G40-

- Installing ⇒ Page 28-8
- Checking camshaft position sensor ⇒ Page 28-22

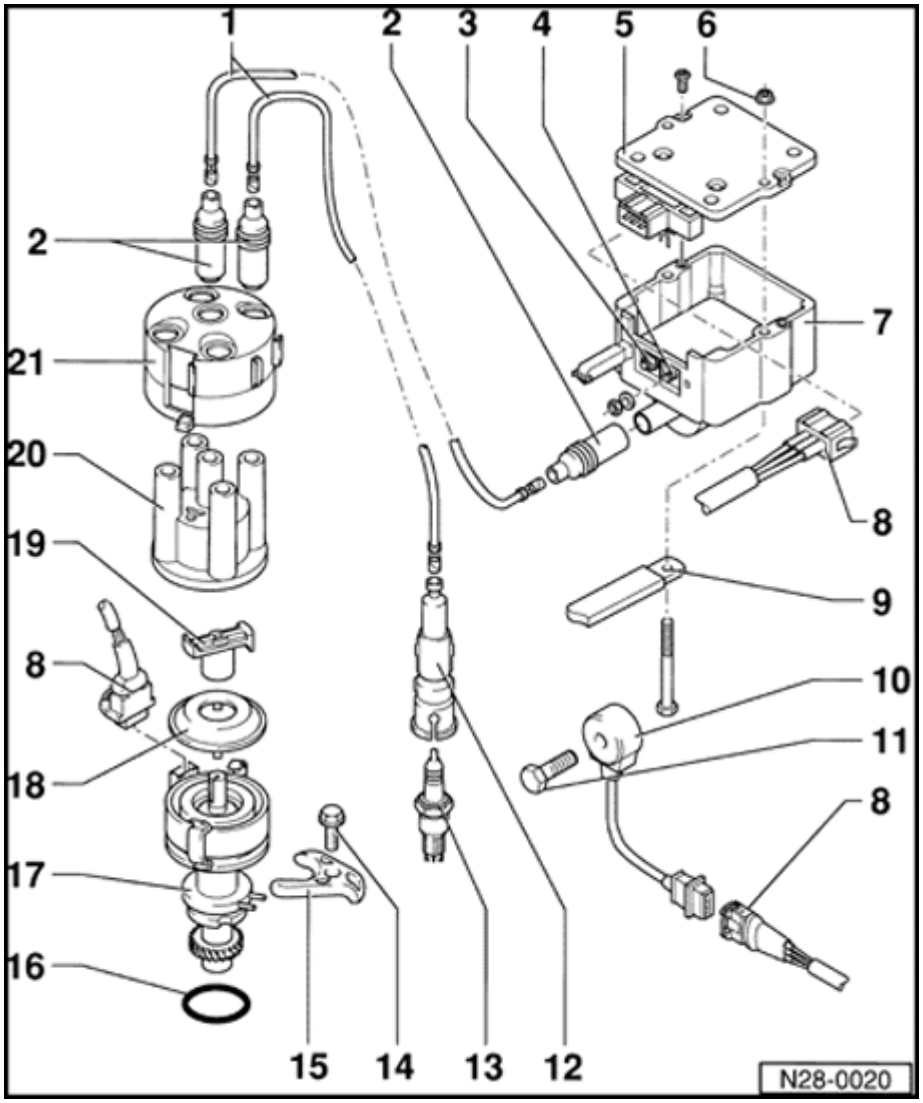

18 - Dust cap

19 - Rotor arm

- Marking R1
- 0 6-1 4 kΩ

20 - Distri utor cap

- Check for cracks and signs of tracking
- Check contact wear
- Clean before installing
- Check carbon brush for wear and freedom of movement

21 - Screening cap

Safety precautions

WARNING!

Be alert when working on or near the engine. High ignition secondary voltage can cause serious personal injury and damage vehicle components.

- ***DO NOT touch or disconnect ignition system wires when the engine is running or being cranked at starting RPM.***
- ***DO NOT operate the starter if the fuel injectors have been removed.***

Be sure the ignition is switched OFF, when:

- ***Disconnecting ignition wires***
- ***Disconnecting fuel injection system wiring***
- ***Connecting or disconnecting test equipment leads***
- ***Disconnecting the battery***
- ***Washing the engine or engine compartment.***

BEFORE cranking the engine at starting RPM (such as for compression testing) disable the ignition and fuel injection systems:

- ***Disconnect the ignition coil power output stage.***
- ***Disconnect harness connectors from all fuel injectors.***

- ***After the work is completed, erase Diagnostic Trouble Code (DTC) memory.***

CAUTION!

BEFORE disconnecting the battery:

- ***Stop the engine.***
- ***Be sure the ignition is switched OFF (also applies when connecting the battery). Failure to do so may damage the Engine Control Module (ECM).***
- ***Be sure of the proper radio code (for vehicles equipped with coded anti-theft radio).***

Be sure the battery negative (-) cable is disconnected, when:

- ***Working on the electrical system***
- ***Resistance (spot) welding or electric arc welding anywhere on the vehicle.***

When connecting and disconnecting electrical test equipment (LED voltage tester, multimeter, etc.):

- ***Be sure the ignition is switched OFF.***
- ***Use correct adapters from the VW 1594 connector test kit.***

For any work affecting the Engine Control Module (ECM):

- ***BEFORE disconnecting the ECM harness connector, switch the ignition OFF and WAIT at least 20 seconds. Failure to do so may damage the ECM.***
- ***DO NOT connect any outside voltage source to stimulate an output signal at the ECM.***

Tec nical data, spar plugs

Engine code	ABA
Ignition timing [1]	
Checking	⇒ Page 28-14
Firing order	1-3-4-2
Spar plugs	
V	101 000 044 AA
Manufacturer s designation	FR 8 DS
Electrode gap	0 8 mm (0 032) [2]
Tightening tor ue	30 m (22 ft lb)

[1] ot adjustable

[2] Gap between Ground (G D) electrode and center electrode insulation

Distri utor, remo ing and installing

Special tools, testers and au iliary items

- Pin wrench Matra V15
- VAG 1331 tor ue wrench (5-50 m)

Note:

The Engine Control Module (ECM) requires the no. 1 cylinder TDC signal from the camshaft position sensor to orient the fuel injection and knock sensor systems as per firing order.

C ec ing no. 1 cylinder TDC mar ings

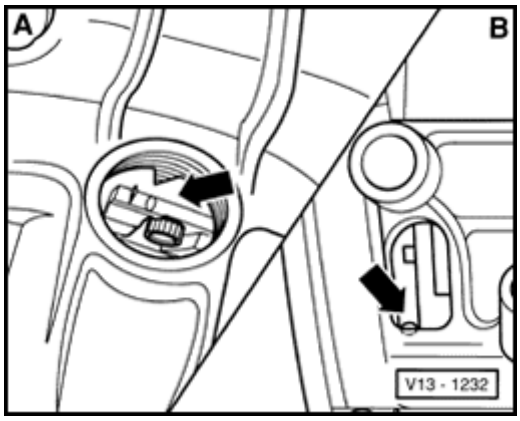

- Set flywheel -A- or drive plate -B- to TDC no 1 cylinder

Engine remo ed

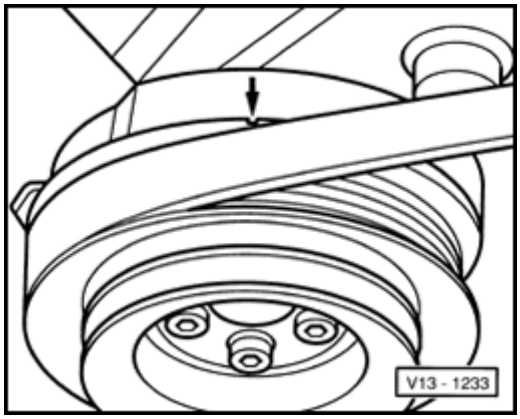

- Set vibration damper (V-belt pulley) to TDC no 1 cylinder

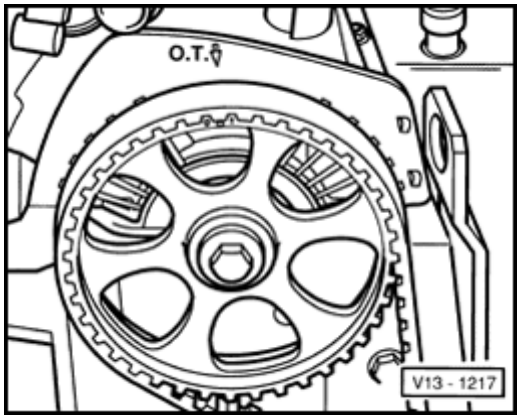

- Mark on camshaft sprocket must align with arrow on cylinder head cover

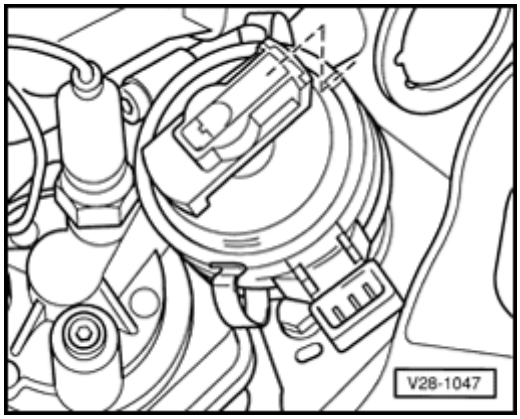

- Mark on distributor must align with mark on rotor arm or camshaft position sensor cover

Remo ing and installing distri utor

Test conditions

- Crankshaft and camshaft in no 1 cylinder TDC position

or se uence

- Remove distributor

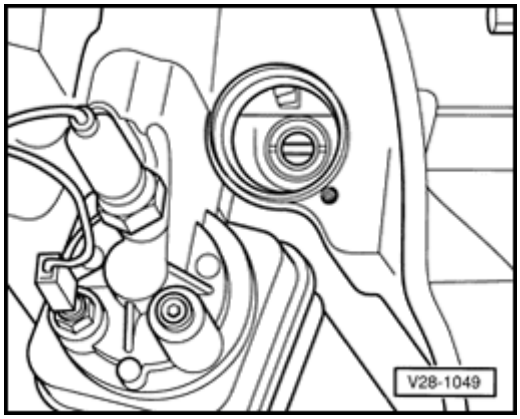

- Before installing distributor align oil pump shaft drive tongue parallel to crankshaft

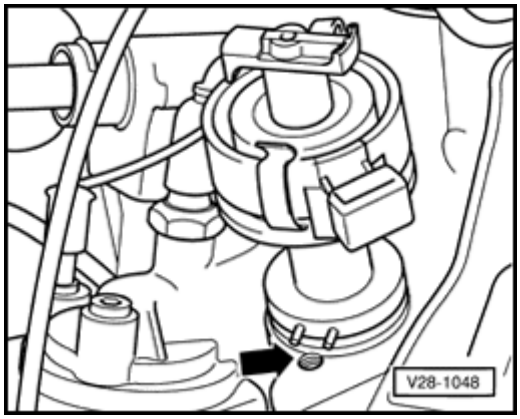

- Install distributor Pins on distributor must point toward mounting bolt threaded hole (arrow)

Note:

When installing, turn rotor arm slightly right of the distributor marking. When inserting, rotor arm will turn back to the marking.

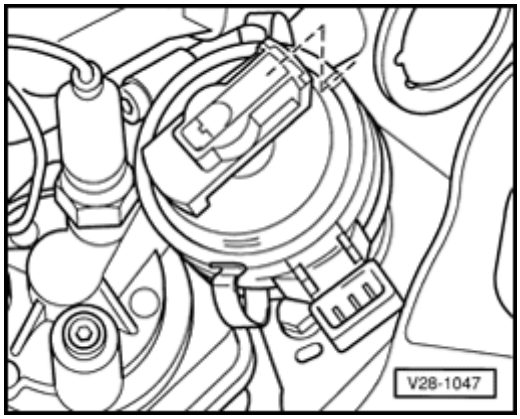

- Mark on distributor must align with mark on rotor arm or camshaft position sensor cover

- Tighten distributor mounting bolt

  Tightening tor ue 25 m (18 ft lb)

If not able to align markings

- Loosen belt tensioner and take toothed drive belt off camshaft sprocket

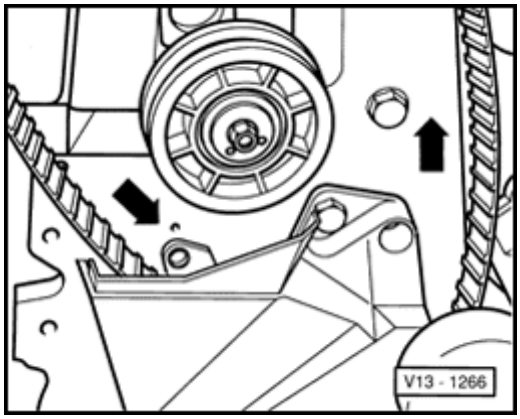

- Turn intermediate shaft sprocket with toothed drive belt in direction shown (arrow), until rotor arm aligns with markings for no 1 cylinder on distributor housing (toothed drive belt slides over crankshaft sprocket)

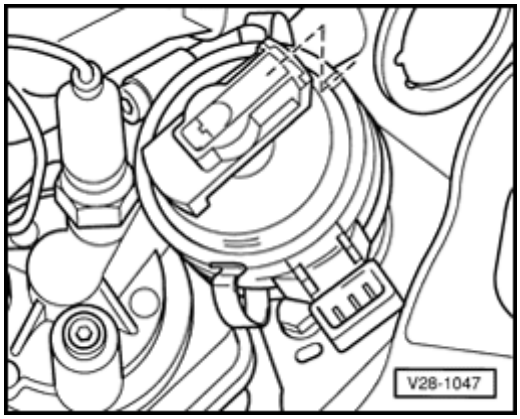

- Mark on distributor must align with mark on rotor arm or camshaft position sensor cover

- Place toothed drive belt on belt tensioner and camshaft sprocket

Note:

For easier installation of the toothed drive belt, loosen belt tensioner lock nut only approx. one thread.

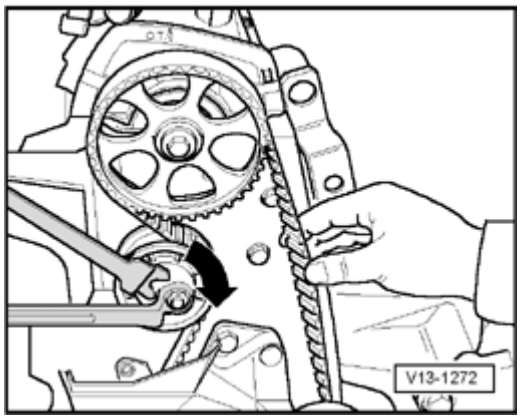

- To tighten toothed drive belt, turn tensioner with pin wrench (e g Matra V15) in direction shown (arrow)
  - Drive belt is correctly tensioned if it can be turned 0° with thumb and forefinger halfway between camshaft and intermediate shaft sprockets
- Tighten tensioner lock nut

  Tightening tor ue 45 m (33 ft lb)
- Rotate crankshaft two full turns and check adjustment
- Check distributor housing and rotor arm markings
- Install upper toothed belt protective cover
- Before installing, clean distributor cap and check for cracks and signs of carbon tracking, replace if necessary

Ignition timing, c ec ing

Special tools, testers and au iliary items

- VAG 1551/1552 scan tool with VAG 1551/3 adapter cable

Test conditions

- Electrical consumers switched off (radiator coolant fan must not run during the check)
- Air conditioner switched off

Test se uence

- Connect VAG 1551 scan tool ((VAG 1552) and select Engine Electronics address word 01 ⇒ Page 01-7 Engine must be running at idle speed

Rapid data transfer **EL**

Select function

Indicated on display

- Press buttons -0- and -8- to select Read Measuring Value Block function 08 and press - - button to confirm input

Read Measuring Value Bloc **EL**

Input display group num er

Indicated on display

- Press buttons -0-, -1- and -0- to input display group 010 and press - - button to confirm input

Read Measuring Value Bloc **10** →

1 **2** **3** **4**

Indicated on display (1-4 = Display fields)

- Check measured values for ignition (display fields 3 and 4)

	Display fields			
	1	2	3	4
Display group 010: Ignition 1				
Display	xxx RPM	xx x ms	. ∠°	. ∠°
Indicated	Engine speed	Engine load	**Ignition angle (mapped alue)**	**Ignition angle**
orking range	800 - 6000 RPM	0 0 - 25 0 ms	**0.0 - 50.0 ∠ ° BTDC**	**0.0 - 40.0 ∠° BTDC**
Specification	800 - 880 RPM	1 5 - 2 5 ms	**11.0 - 13.0 ∠ ° BTDC**	**Ma . ±2.0 ∠° de iation from display field 3**
	-	-	**Test conditions:** • Intake manifold temperature max 50 °C (122 °F) **If t e specification is not attained ⇒ age 24-69 , c ec ing t rottle al e control module**	

- Read readiness code ⇒ Page 01-33 If DTC memory has been erased, repair must be verified via appropriate display group ⇒ Page 01-35 , Readiness code, creating

- Press → button

- Press buttons -0- and -6- to select End Output function 06 and press - - button to confirm input

Misfire detection, c ec ing

Special tools, testers and au iliary items

- VAG 1551/1552 scan tool with VAG 1551/3 adapter cable

Test se uence

- Connect VAG 1551 scan tool ((VAG 1552) and select Engine Electronics address word 01 ⇒ Page 01-7 Engine must be running at idle speed

Rapid data transfer **EL**

Select function

Indicated on display

- Press buttons -0- and -8- to select Read measuring value block function 08 and press - - button to confirm input

Read Measuring Value Bloc **EL**

Input display group num er

Indicated on display

- Press buttons -1-, -1- and -0- to input display group 110 and press - - button to confirm input

Read Measuring Value Bloc **110** →

1 **2** **3** **4**

Indicated on display (1-4 = Display fields)

- Check specifications for misfire detection (display fields 2-4)

	Display fields			
	1	2	3	4
Display group 110: Misfire detection 1				
Display	x xx ms			
Indicated	Engine load	**Misfiring ad ersely affecting e aust gas (total)**	**Misfiring ad ersely affecting t ree way catalytic con erter (total)**	**Misfiring recognition status**
orking range	0 00 - 25 00 ms	**-**	**-**	**-**
Specification	1 00 - 3 00 ms	**0**	**0**	**00000000**
	-	**If t e specification is not attained ⇒ age 28-18 , e aluating display group 110**		

- Read readiness code ⇒ Page 01-33 If DTC memory has been erased, repair must be verified via appropriate display group ⇒ Page 01-35 , Readiness code, creating

- Press → button

- Press buttons -0- and -6- for the End Output function and press - - button to confirm input

E aluating display group 110

Display group 110 Display field 2 3	Possible malfunction cause	Malfunction elimination
More than 25	♦ Ignition coil faulty ♦ Ignition wire faulty ♦ Spark plug faulty	- Check ignition coil ⇒ Page 28-30 - Checking components of ignition system ⇒ Page 28-1
	♦ Fuel injector faulty ♦ Fuel shortage	- Check fuel injectors ⇒ Page 24-116 - Check uantity of fuel in tank

Ignition timing control, c ec ing

Special tools, testers and au iliary items

- VAG 1551/1552 scan tool with VAG 1551/3 adapter cable

Test conditions

- Electrical consumers switched off (radiator coolant fan must not run during the check)
- Air conditioner switched off
- Engine oil temperature at least 80 °C (176 °F)

Test se uence

- Connect VAG 1551 scan tool ((VAG 1552) and select Engine Electronics address word 01 ⇒ Page 01-7 Engine must be running at idle speed

Rapid data transfer **Select function**	**EL**	⮜	Indicated on display - Press buttons -0- and -8- to select Read Measuring Value Block function 08 and press - - button to confirm input
Read Measuring Value Bloc **Input display group num er**	**EL**	⮜	Indicated on display - Press buttons -0-, -1- and -0- to input display group 010 and press - - button to confirm input

Read Measuring Value Bloc 10 →

1 2 3 4

Indicated on display (1-4 = Display fields)

- Check measured values for ignition timing control (display fields 1-4)

	Display fields			
	1	2	3	4
Display group 010: Ignition 1				
Display	**R M**	**. ms**	**. ∠°**	**. ∠°**
Indicated	**Engine speed**	**Engine load**	**Ignition angle (mapped alue)**	**Ignition angle**
orking range	**800 - 6000 R M**	**0.0 - 25.0 ms**	**0.0 - 40.0 ∠° BTDC**	**0.0 - 40.0 ∠° BTDC**
Specification	**800 - 880 R M**	**1.9 - 2.1 ms**	**11.0 - 13.0 ∠° BTDC**	**Ma . ±2.0 ∠° de iation from display field 3**
	2480 - 2520 R M	**1.7 - 1.9 ms**	**23.0 - 25.0 ∠° BTDC**	**Ma . ±2.0 ∠° de iation from display field 3**
	-	**-**	**Test condition:** • Intake manifold temperature max 50 °C (122 °F) **If t e specification is not attained ⇒ age 28-21 , continuation**	

Continuation

- Check engine operating conditions ⇒ Page 24-61

- Check throttle valve control module ⇒ Page 24-6

- Check knock sensor and knock control ⇒ Page 28-25

If the specification is again not attained

- Replace Engine Control Module (ECM) -J220- ⇒ Page 24-8 , item 12

- Read readiness code ⇒ Page 01-33 If DTC memory has been erased, repair must be verified via appropriate display group ⇒ Page 01-35 , Readiness code, creating

Cams aft osition (CM) sensor, c ec ing

Special tools, testers and au iliary items

- VAG 15 8/18 test box
- Multimeter (Fluke 83 or e uivalent)
- Connector test kit V 15 4
- iring diagram

Test se uence

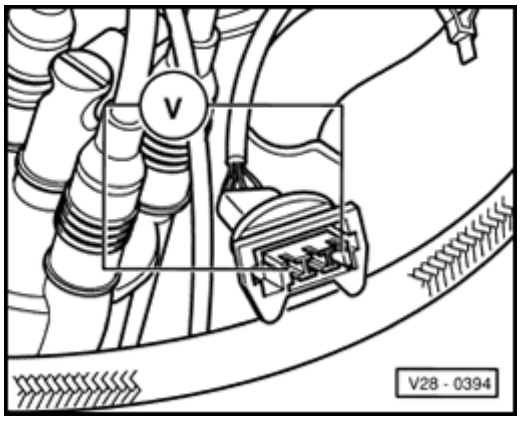

- Disconnect 3-pin connector from camshaft position sensor
- Connect multimeter using test leads from V 15 4 to measure voltage at terminals 1 and 3 of connector
- Switch ignition on
- Measure voltage between terminals 1 and 3

  Specification -14 5 volts
- Switch ignition off

If the specification is not attained

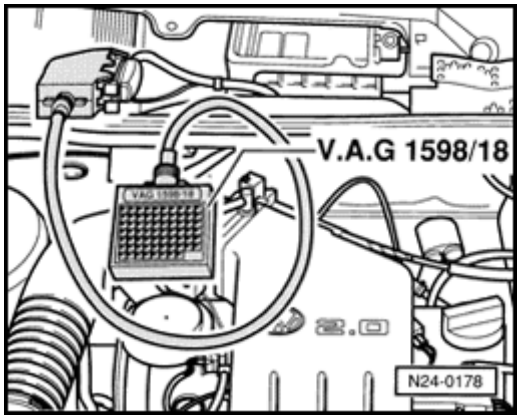

- Connect VAG 15 8/18 test box to Engine Control Module (ECM) wiring harness

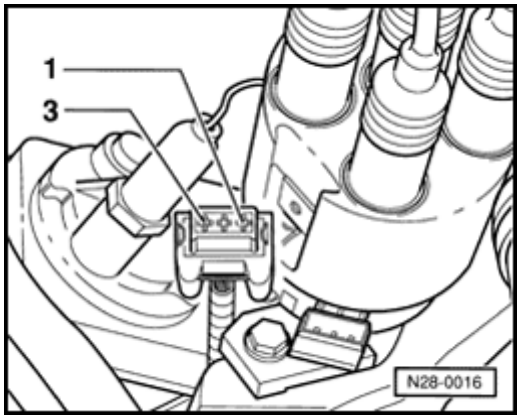

- Check wiring between test box and 3-pin connector for open circuit according to wiring diagram
  - Terminal 1 and test box socket 56
  - Terminal 2 and test box socket 44

  Resistance max 1 5 ohms (Ω)
- Check wire between 3-pin connector and relay panel for open circuit using wiring diagram

  Terminal 3 and relay panel

  Resistance max 1 5 ohms (Ω)

- Additionally check all wires for short circuit to each other

  - Terminal 3 and test box socket 44
  - Terminal 3 and test box socket 56
  - Terminal 2 and test box socket 56

  Specification ∞ ohms (Ω)

If no wiring malfunction is detected and voltage was present between terminals 1 and 3

- Replace distributor with camshaft position sensor ⇒ Page 28-3 , Item 17

If no wiring malfunction is detected and no voltage was present between terminals 1 and 3

- Replace Engine Control Module (ECM) -J220- ⇒ Page 24-8 , item 12

- Read readiness code ⇒ Page 01-33 If DTC memory has been erased, repair must be verified via appropriate display group ⇒ Page 01-35 , Readiness code, creating

noc Sensor (S) and noc control, c ec ing

Special tools, testers and au iliary items

- VAG 1551/1552 scan tool with VAG 1551/3 adapter cable
- VAG 15 8/18 test box
- Multimeter (Fluke 83 or e uivalent)
- Connector test kit V 15 4
- iring diagram

Test se uence

- Connect VAG 1551 scan tool ((VAG 1552) and select Engine Electronics address word 01 ⇒ Page 01-7 Engine must be running at idle speed

Rapid data transfer **EL** ⮜ Indicated on display

Select function

- Press buttons -0- and -8- to select Read Measuring Value Block function 08 and press - - button to confirm input

Read Measuring Value Bloc **EL** ⮜ Indicated on display

Input display group num er

- Press buttons -0-, -4- and -5- to input display group 045 and press - - button to confirm input

Read Measuring Value Bloc **45** → ⮜ Indicated on display (1-4 = Display fields)

1 2 3 4

Note:

The check must be carried out during a test drive as knock control is not active with an engine load exceeding 3 ms.

- Perform test drive and observe specification for knock control on display (second technician necessary)

	Display fields			
	1	2	3	4
Display group 045: noc control				
Display	. ∠°	. ∠°	. ∠°	. ∠°
Indicated	**Ignition angle correction cylinder 1**	**Ignition angle correction cylinder 2**	**Ignition angle correction cylinder 3**	**Ignition angle correction cylinder 4**
orking range	**0.0 - 15.0** ∠°	**0.0 - 15.0** ∠°	**0.0 - 15.0** ∠°	**0.0 - 15.0** ∠°
Specification	**0.0 - 12.0** ∠°	**0.0 - 12.0** ∠°	**0.0 - 12.0** ∠°	**0.0 - 12.0** ∠°
	If t e specification is not attained ⇒ age 28-27 , e aluating display group 045			

- Read readiness code ⇒ Page 01-33 If DTC memory has been erased, repair must be verified via appropriate display group ⇒ Page 01-35 , Readiness code, creating

- Press → button

- Press buttons -0- and -6- to select End Output function 06 and press - - button to confirm input

E aluating display group 045

Display group 045 Display fields 1-4	Possible malfunction cause	Malfunction elimination
All cylinders more than 12 ∠°	♦ Knock sensor faulty	- Continuation ⇒ Page 28-28
	♦ Connector corroded	
	♦ Knock sensor incorrectly tightened	- Loosen knock sensor and tighten to 20 m (15 ft lb)
	♦ Attached components on engine loose	- Tighten attached components
	♦ Poor fuel uality	- Change fuel type
One cylinder deviates greatly from the others	♦ Connector corroded	- Continuation ⇒ Page 28-28
	♦ Engine damage	- Check compression pressures ⇒ *Repair Manual, 2.0 Liter 4-Cyl. 2V Engine Mechanical, Engine Code(s): ABA m.y. 1995 - 1997, Repair Group 13*
	♦ Attached components on engine loose	- Tighten attached components

Continuation

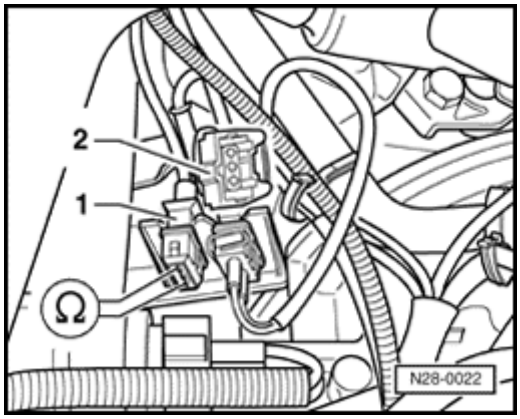

- Disconnect blue 3-pin connector -2- from Knock Sensor (KS) 1 -G61- -1-
- Connect multimeter with test leads from V 15 4 to measure resistance between terminals 1 and 2, 1 and 3, and 2 and 3 on knock sensor connector

  Specification ∞ ohms (Ω)

If the specification is attained

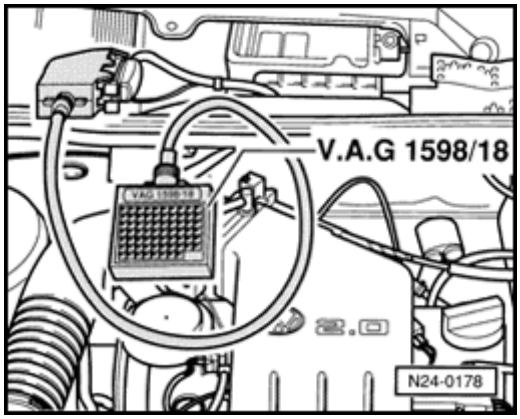

- Connect VAG 15 8/18 test box to ECM wiring harness

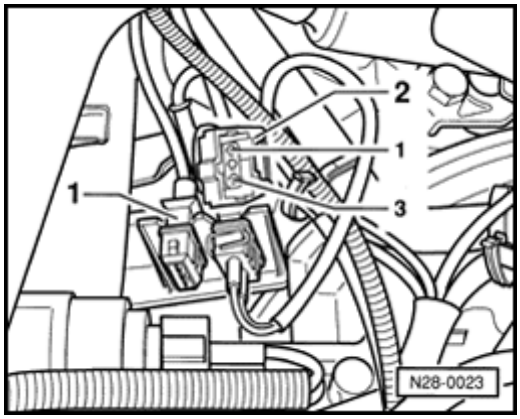

- Check wiring between test box and 3-pin connector for open circuit according to wiring diagram
  - Terminal 1 and test box socket 34
  - Terminal 2 and test box socket 33
  - Terminal 3 and test box socket 56

  Resistance max 1 5 ohms (Ω)
- Additionally check wires for short to one another
  - Terminal 3 and test box socket 34
  - Terminal 3 and test box socket 33
  - Terminal 2 and test box socket 34

  Specification ∞ ohms (Ω)

If no wiring malfunction is detected

- Loosen knock sensor and tighten again to 20 m (15 ft lb)

If the malfunction is still present (malfunction again in Diagnostic Trouble Code (DTC) memory)

- Replace Knock Sensor (KS) 1 -G61- ⇒ Page 28-3 , item 10
- Read readiness code ⇒ Page 01-33 If DTC memory has been erased, repair must be verified via appropriate display group ⇒ Page 01-35 , Readiness code, creating

Ignition coil, c ec ing

Special tools, testers and au iliary items

- Multimeter (Fluke 83 or e uivalent)
- Connector test kit V 15 4

Test se uence

- Disconnect connector and ignition wire from ignition coil - 152-
- Connect multimeter with test leads from V 15 4 to measure resistance

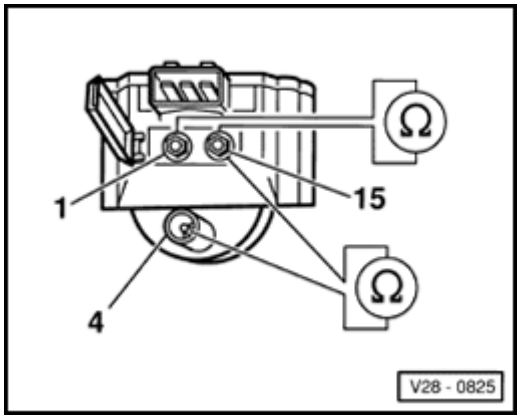

- Check ignition coil primary resistance with multimeter (Fluke 83 or e uivalent) between terminals 1 and 15

  Specification 0 5-1 2 ohms (Ω)
- Check ignition coil secondary resistance with multimeter between terminals 4 and 15

  Specification 3-4 kΩ

If the specifications are not attained

- Replace Ignition coil - 152- ⇒ Page 28-2 , i 7

Ignition coil power output stage, c ec ing

Special tools, testers and au iliary items

- VAG 15 8/18 test box
- Multimeter (Fluke 83 or e uivalent)
- VAG 1527B voltage tester
- Connector test kit V 15 4
- iring diagram

C ec ing oltage supply

- Disconnect 3-pin connector from ignition coil

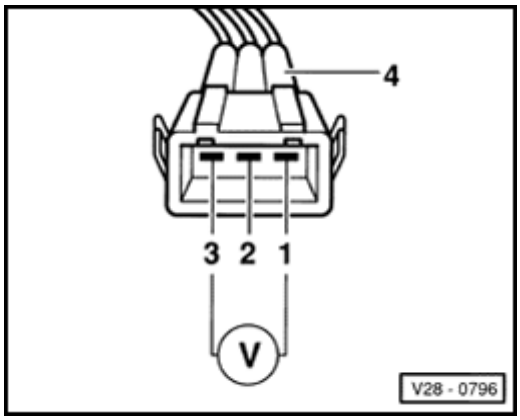

- Connect multimeter using test leads from V 15 4 to measure voltage at terminals 1 and 3 of connector
- Switch ignition on
- Measure voltage between terminals 1 and 3

  Specification -14 5 volts
- Switch ignition off

If the specification is not attained

- Check wiring between 3-pin connector and r panel for open circuit using wiring diagram

  - Terminal 1 and relay panel

  - Terminal 3 and relay panel

  Resistance max 1 5 ohms (Ω)

If no wiring malfunction is detected and voltage was present between terminals 1 and 3

- Replace Ignition coil - 152- ⇒ Page 28-2 , i 7

If no wiring malfunction is detected and no voltage was present between terminals 1 and 3

- Replace Engine Control Module (ECM) -J22 Page 24-8 , item 12

- Read readiness code ⇒ Page 01-33 If DTC memory has been erased, repair must be verified via appropriate display group ⇒ Pag 01-35 , Readiness code, creating

C ec ing acti ation

- Disconnect engine harness center connecto Page 24-2 , item 11

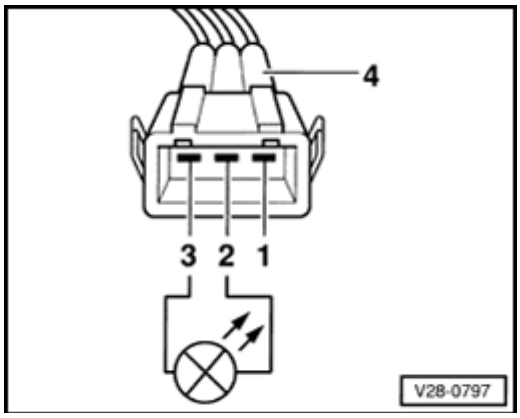

- Connect VAG 1527B voltage tester with test leads from V 15 4 and adapters V 15 4 to terminals 2 and 3 of connector

- Operate starter and check ignition signal fror ECM

  - LED must flicker

- Switch ignition off

If the LED does not flicker

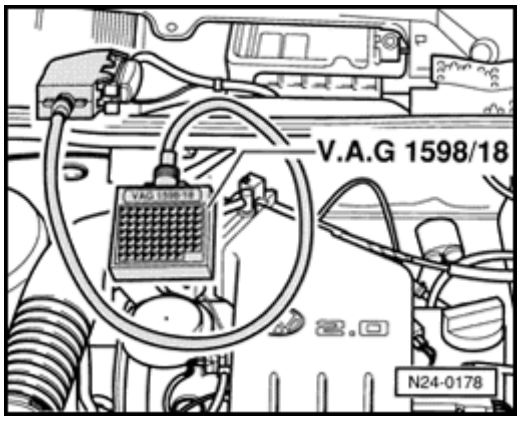

- Connect VAG 15 8/18 test box to ECM wirir harness
- Check wiring between 3-pin connector and t box for open circuit according to wiring diagr

  Terminal 2 and test box socket 8

  Resistance max 1 5 ohms (Ω)
- Additionally check the wiring for short circuit each other

  - Terminal 1 and test box socket 8
  - Terminal 3 and test box socket 8

  Specification ∞ ohms (Ω)

If no wiring malfunction is detected and voltage present between terminals 1 and 3

- Replace ECM -J220- ⇒ Page 24-8 , item 12
- Read readiness code ⇒ Page 01-33 If DTC memory has been erased, repair must be verified via appropriate display group ⇒ Pag 01-35 , Readiness code, creating

If the voltage supply and activation is OK

- Reconnect 3-pin harness connector and igni wire to ignition coil

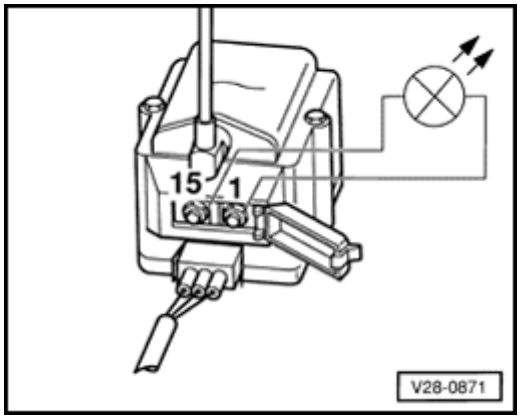

- Connect LED voltage tester with test leads t terminals 1 and 15 on ignition coil

CAUTION!

During the following test do not touch the terminals of the ignition coil or test cables.

- Operate starter
  - LED must flicker
- If necessary, replace ignition coil power outp stage

Volkswagen Passat

Official Factory Repair Manual

1996, 1997
Gasoline, Turbo Diesel, TDI
4-cylinder and VR6, including wagon

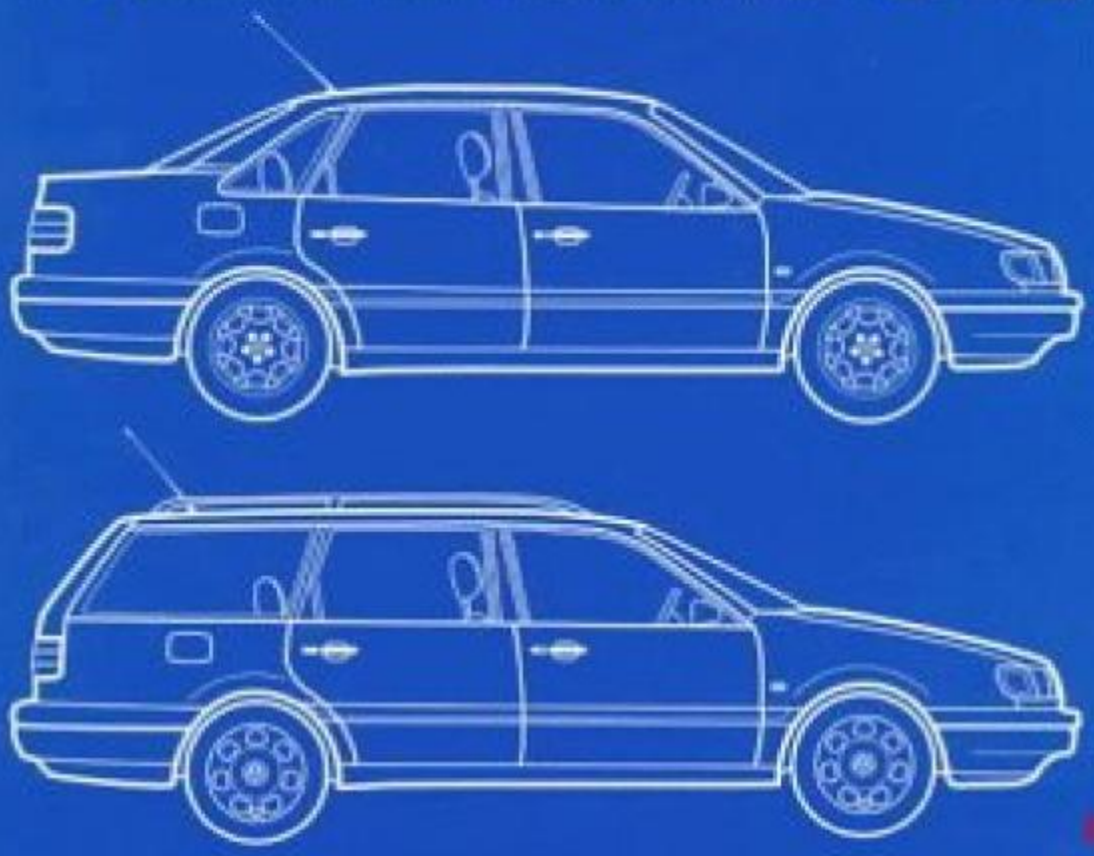

Robert Bentley

PASSAT '95 - '97

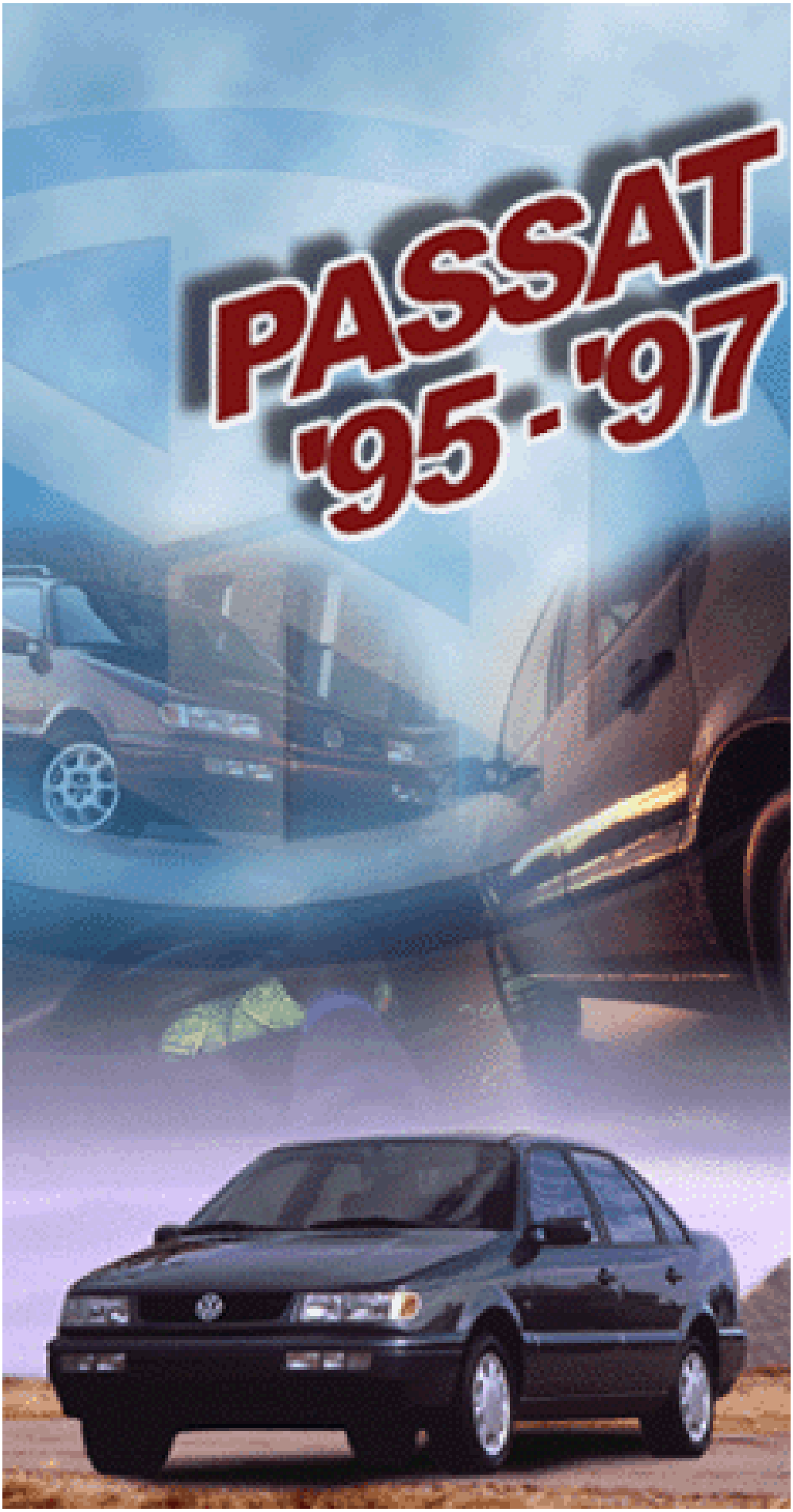

2.0 Liter 4-Cyl. 2V Generic Scan Tool Fuel Injection & Ignition, Engine Code(s): ABA m.y. 1996-1997

20 - Fuel Supply

Fuel supply system components, removing and installing
Fuel filter and fuel tank with attaching parts, removing and installing
Safety precautions when working on fuel supply system
Rules of cleanliness
Fuel pump, removing and installing
Fuel Pump (FP), checking

EVAP canister system
EVAP canister system components, removing and installing
Fuel tank ventilation, checking
Evaporative Emission (EVAP) canister purge regulator valve 1, checking

Accelerator Pedal (AP) cable, adjusting
Vehicles with manual transmission
Vehicles with automatic transmission

24 - Multiport Fuel Injection (MFI)

Motronic fuel injection and ignition system
Overview of component locations
General Notes on Fuel Injection
Fuel injector parts, servicing
Intake manifold, upper part, disassembling and assembling
Intake manifold, lower part, disassembling and assembling
Air filter, disassembling and assembling
Safety precautions
Rules of cleanliness
Technical data

Components of engine, checking
Oxygen sensor heater for oxygen sensor before Three Way Catalytic Converter (TWC), checking
Oxygen sensor heater for oxygen sensorbehind Three Way Catalytic Converter (TWC), checking
Mass Air Flow (MAF) sensor, checking
Throttle valve control module, checking
Engine Coolant Temperature (ECT) sensor, checking
Intake Air Temperature (IAT) Sensor, checking
Engine speed (RPM) sensor, checking
Fuel injectors, checking
Fuel pressure regulator and residual pressure, checking
Intake system for leaks (false air), checking

Function tests
Oxygen sensor and oxygen sensor regulation before catalytic converter, checking
Oxygen sensor and oxygen sensor regulation behind catalytic converter, checking
Intake air pre-heating, checking

Engine Control Module (ECM)
Function
Voltage supply for Engine Control Module (ECM), checking
Engine Control Module (ECM), replacing

Additional signals, Checking
Speed signal, checking

26 - Exhaust system, Emission controls

Exhaust system components, removing and installing
Exhaust manifold, front exhaust pipe and catalytic converter with attachments
Mufflers with mounts
Three Way Catalytic Converter (TWC), checking

Secondary Air Injection (AIR) system
Function
Secondary Air Injection (AIR) system components, removing and installing
Secondary Air Injection (AIR) system, checking for proper seal
Secondary Air Injection (AIR) valve, checking
Secondary Air Injection (AIR) pump motor, checking
Combination valve, checking

28 - Ignition/Glow plug system

Ignition, servicing
General notes on ignition system
Ignition components, removing and installing
Safety precautions
Test Data, Spark Plugs
Ignition distributor, removing and installing
Camshaft Position (CMP) sensor, checking
Knock sensors, checking
Ignition coil, checking
End stage for ignition coil, checking

37 - Automatic Transmission - Controls, Housing

Selector lever mechanism, servicing
Safety precautions
Selector lever mechanism, (vehicles without ignition key removal lock), disassembling and assembling

Selector lever mechanism, (vehicles with ignition key removal lock), disassembling and assembling
Selector lever, (vehicles with ignition key removal lock), disassembling and assembling
Locking cable (vehicles with ignition key removal lock), removing and installing
Locking cable (vehicles with ignition key removal lock), adjusting
Selector lever cable, checking and adjusting
Ignition key removal lock (vehicles with ignition key removal lock), checking

38 - Automatic Transmission - Gears, Hydraulic controls

Electrical components of transmission control, removing and installing, checking
Safety precautions
Electrical/electronic components and component locations
Multi-Function Transmission Range (TR) Switch, checking
Transmission Vehicle Speed Sensor (VSS), checking
Vehicle Speed Sensor (VSS), checking
Transmission Fluid Temperature Sensor, checking
Solenoid valves in valve body, checking

Transmission Control Module (TCM)
Function
Transmission Control Module (TCM), replacing

ST - Generic Scan Tool

General information for On Board Diagnostic (OBD)
Characteristics of On Board Diagnostic (OBD)
On Board Diagnostic (OBD), technical data
Diagnostic tester, connecting
Test box, connecting for wiring test

Diagnostic mode, selecting
Address word 33 - On-Board Diagnostic (OBD)
Diagnostic mode 1: Check measured values
Diagnostic mode 2: Check operating conditions
Diagnostic mode 3: Check DTC Memory
Diagnostic mode 4: Reset/erase diagnostic data
Diagnostic mode 5: Check output of oxygen sensor signals
Diagnostic mode 6: Check test results of components that are not continuously monitored
Diagnostic mode 7: Check test results
Diagnostic mode 8: Tank leak test

Readiness code
Function
Read readiness code
Readiness code, generating

Diagnostic Trouble Code (DTC) tables:

SAE P0xxx-DTCs
SAE P1xxx-DTCs
SAE P2xxx-DTCs
SAE P3xxx-DTCs

Fuel supply system components, removing and installing

Note:

- *Hose connections are secured with click-typ clamps, spring-type clamps or open clips w insert.*
- *Fuel hoses at engine must only be secured spring-type clamps. The use of click-type clamps or open clips with insert is not permitted.*

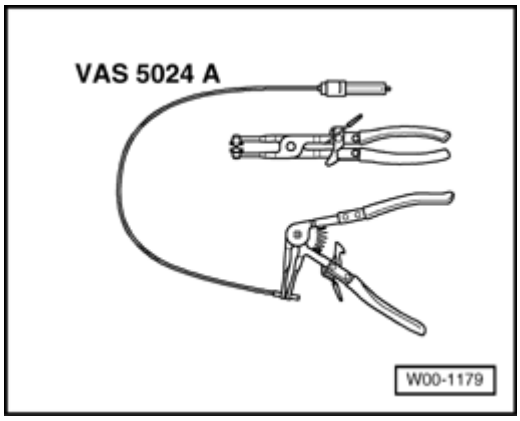

- *VAS5024A spring clip installation tool is recommended for installing spring-type clip.*

Fuel tank with attachments and fuel filter, remo and installing ⇒ Page 20-2 .

Observe safety precautions ⇒ Page 20-8 .

Observe rules for cleanliness ⇒ Page 20-10 .

EVAP canister system ⇒ Page 20-28 .

Adjusting accelerator pedal cable ⇒ Page 20-3

20-2

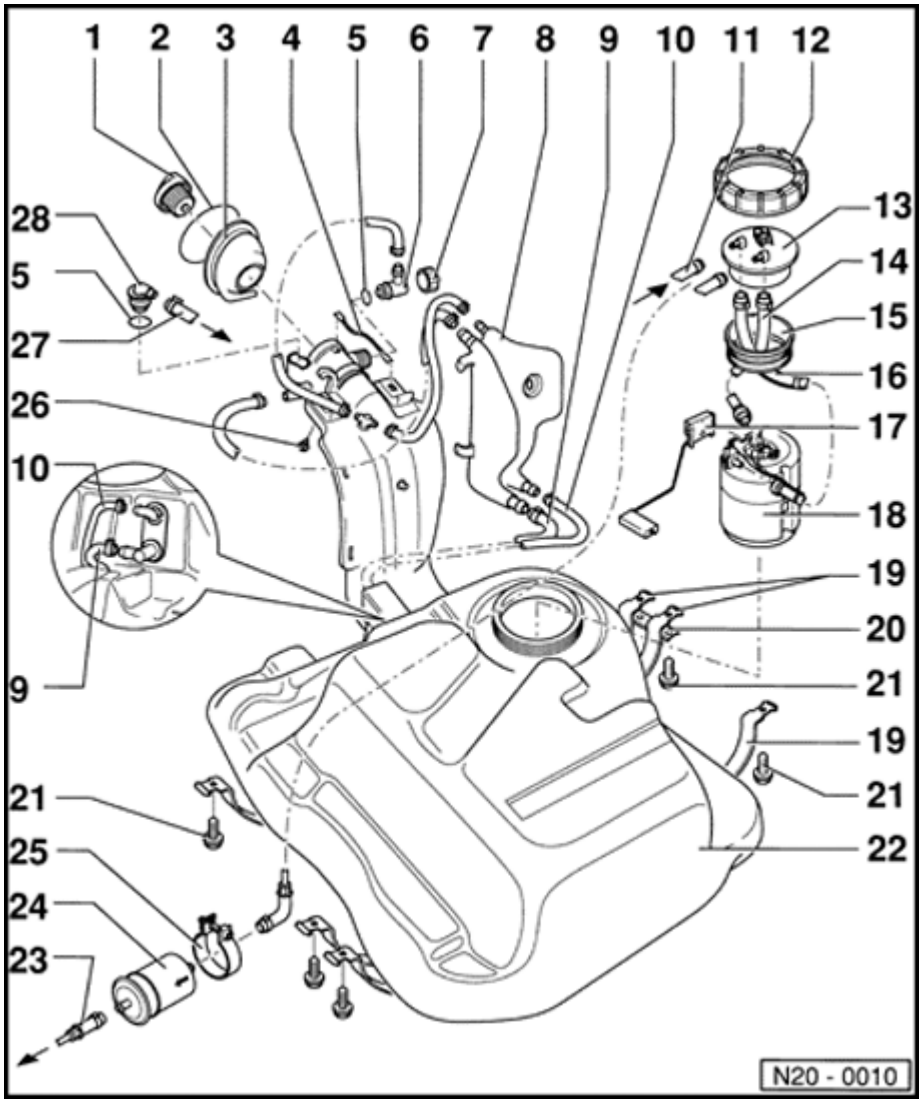

Fuel filter and fuel tank with attaching parts, removing and installing

Note:

Make sure the supply or return lines do not come into contact with the fuel tank after all work on the fuel pump or the fuel gauge (transfer of pump noise).

1 - Cap

- Replace seal if damaged

2 - Circlip

3 - Rubber top

4 - Ground (GND) connection

- Check for secure seating

20-3

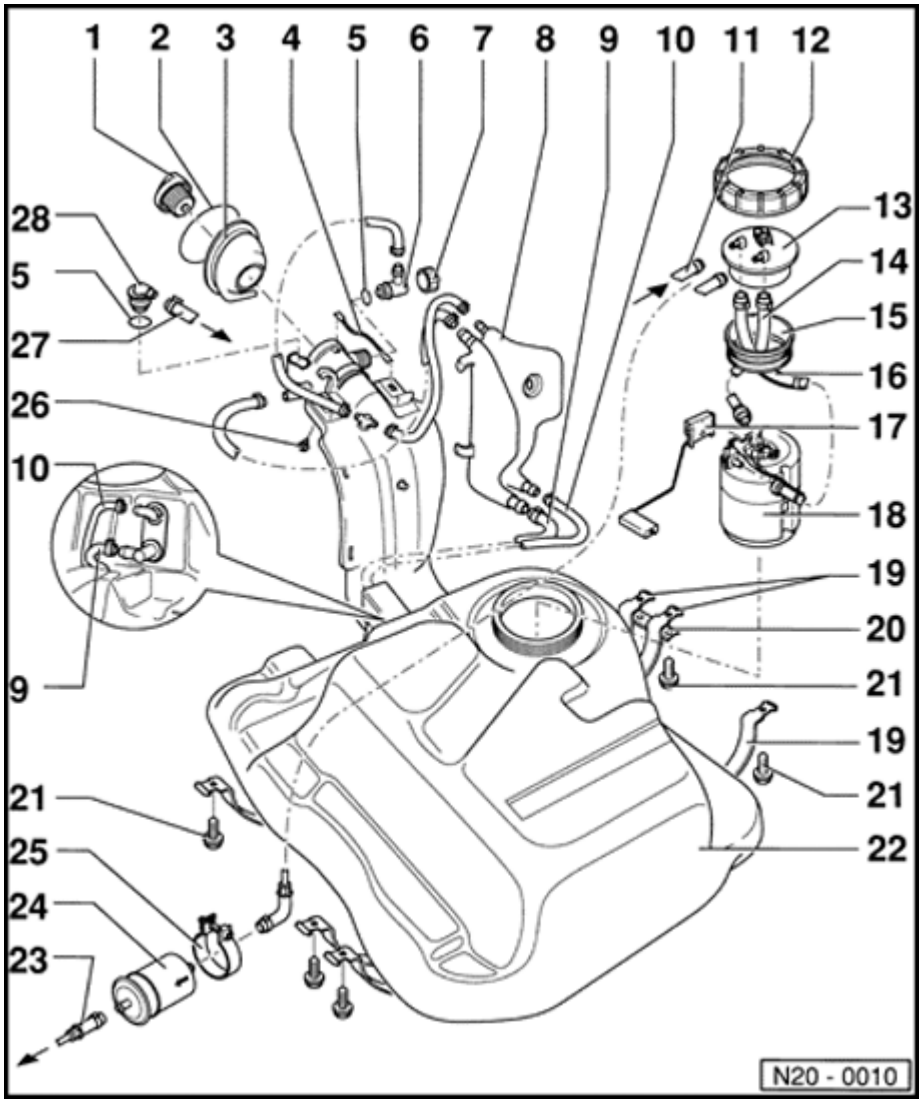

5 - O-ring

- Replace if damaged

6 - Vent valve

- Checking ⇒ Fig. 2

7 - Union nut, 60 Nm

8 - Expansion tank

- Version shown: Wagon
- For sedan, simpler expansion tank

9 - Vent line

- Filler ventilation
- Check for secure seating

10 - Vent line

- Operating ventilation
- Only station wagon
- Check for secure seating

20-4

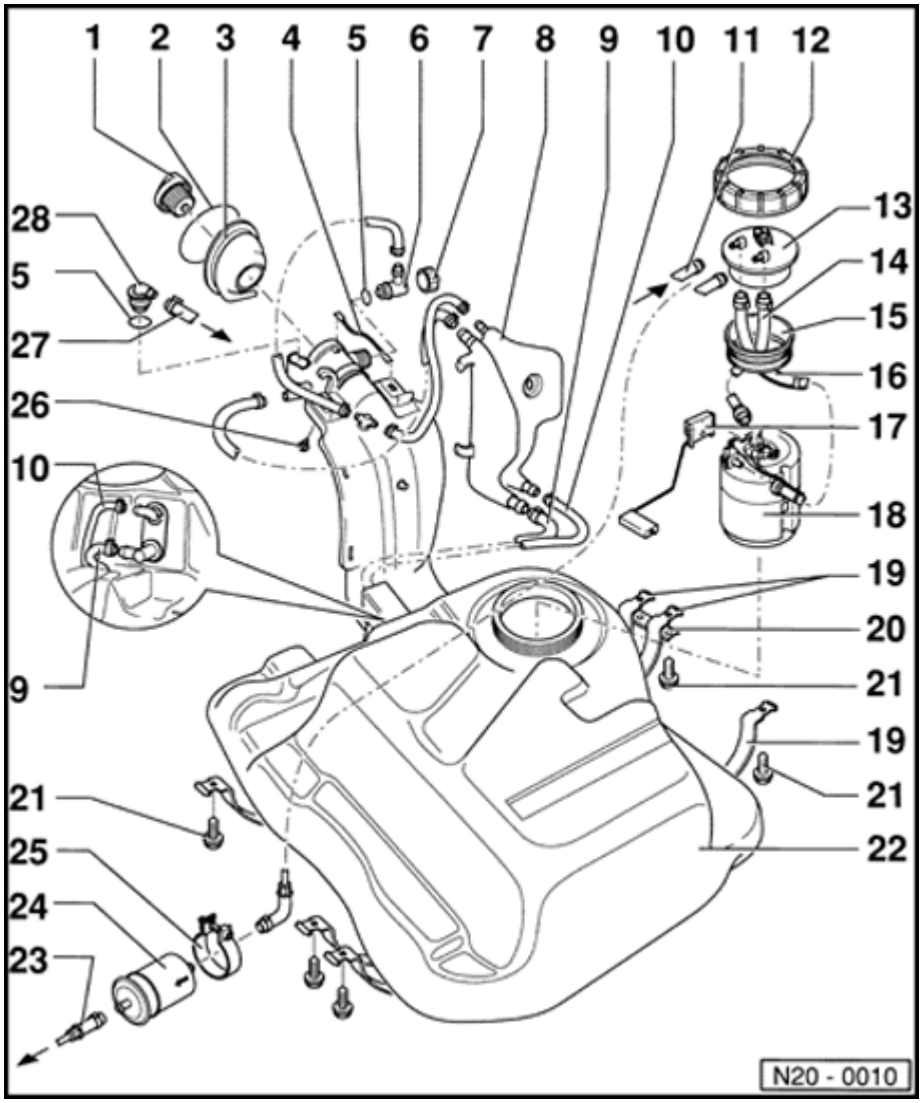

11 - Return hose

- Blue
- Check for secure seating
- From fuel return line at fuel distributor ⇒ Page 24-14 , Item 35

12 - Union nut, 60 Nm

- Use wrench 3217 to remove and install

13 - Flange

- Note installation position at fuel tank ⇒ Fig. 1

14 - Supply hose

- Check for secure seating

15 - Seal

- Replace if damaged

- To install, place into opening of fuel tank when dry
- Only coat with fuel when installing Fuel Pump (FP) flange

20-5

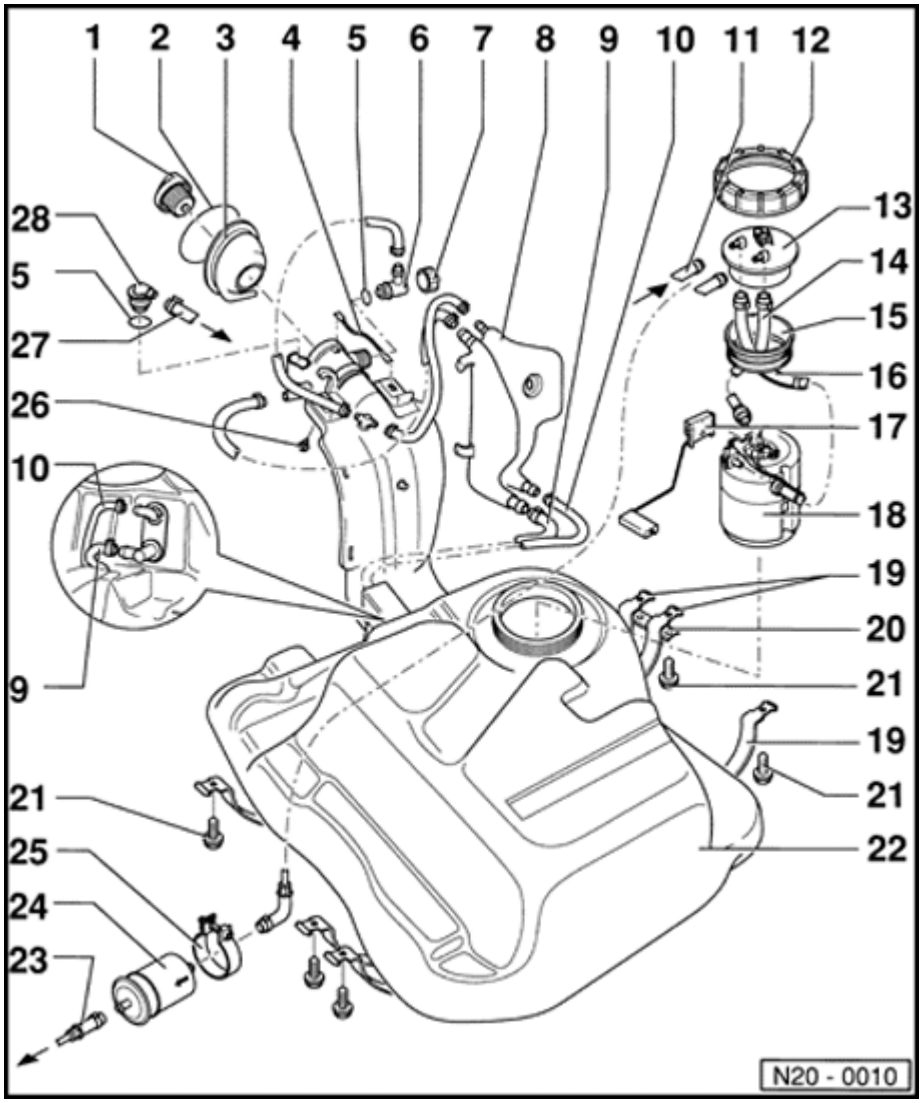

16 - Return hose

- Check for secure seating

17 - Sender for fuel gauge -G-

18 - Fuel pump (FP) -G-

- Removing and installing ⇒ Page 20-11
- Checking Fuel Pump (FP) ⇒ Page 20-15

19 - Tension strap

- Note varying lengths

20 - Bracket

- For tension straps

21 - 25 Nm

22 - Fuel tank

20-6

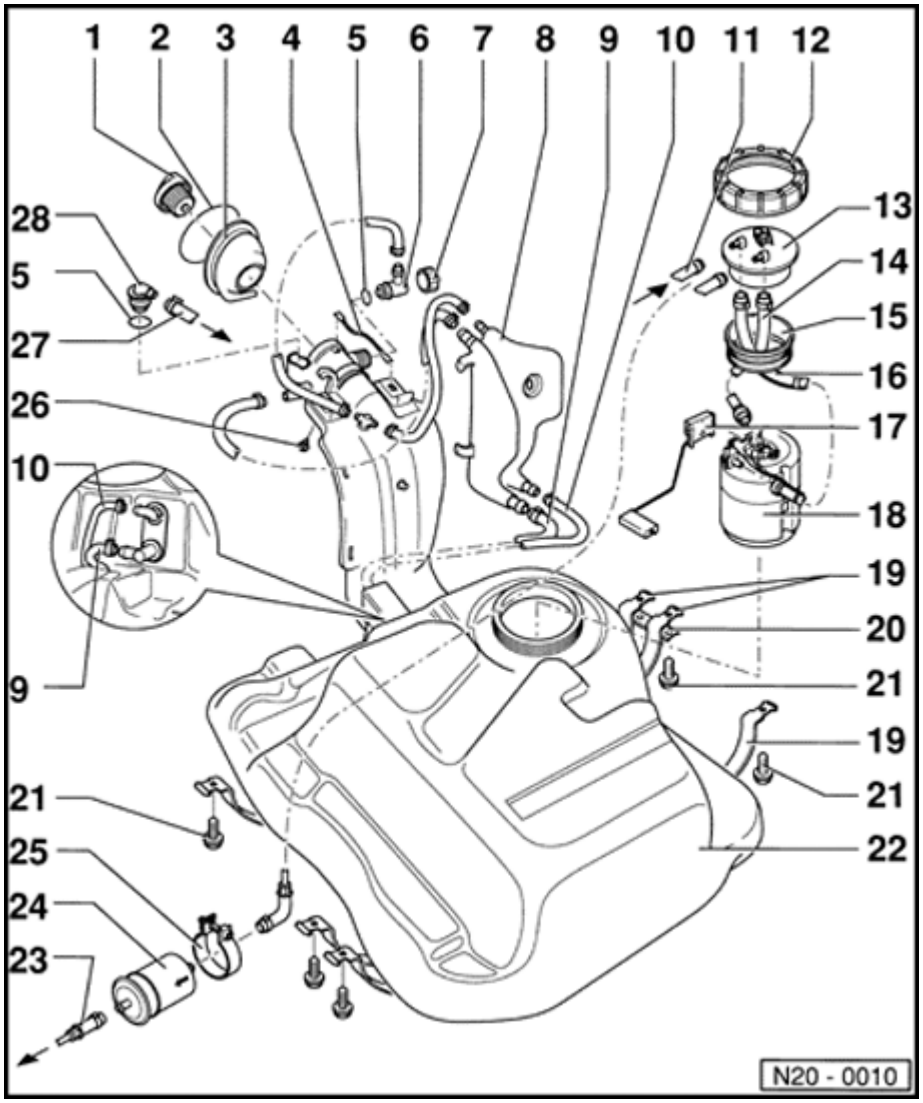

23 - Supply line

- Black
- Check for secure seating
- To fuel supply line at fuel distributor ⇒ Page 24-14 , Item 34

24 - Fuel filter

- Installation position: (Arrow) points in direction of flow

25 - Screw clip

26 - 10 Nm

27 - Vent line

- Check for secure seating
- To EVAP canister ⇒ Page 20-29 , item no. 6

28 - Gravity valve

- To remove,

unclip valve upward and lift out.

- Checking valve for throughput Valve vertical: open, Valve tilted 45 ° : closed

20-7

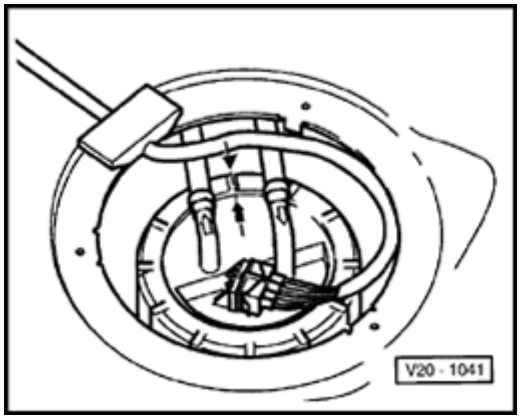

Fig. 1 Installation position of Fuel Pump (FP) flange

Mark on flange must align with mark on fuel tank

Note:

After installing Fuel Pump (FP) unit flange, check whether supply, return and ventilation lines are still clipped in at fuel tank.

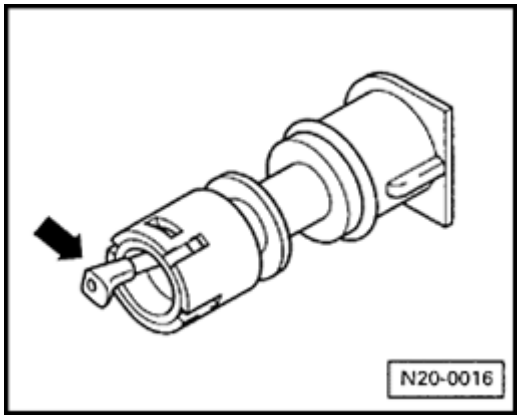

Fig. 2 Checking vent valve

Lever in rest position: closed

Lever pressed in direction of (arrow): open

Safety precautions when working on fuel supply system

WARNING!

Observe the following for all installations, especially in engine compartment due to lack of room:

- ***Route lines of all types (e.g. for fuel, hydraulic, EVAP canister system, coolant and refrigerant, brake fluid, vacuum) and electrical wiring so that the original path is followed.***
- ***Watch for sufficient clearance to all moving or hot components.***
- ***Fuel system is under pressure! Before opening system, place rags around the connection point. Then release pressure by carefully loosening connection.***

Always observe the following when removing and installing the sender for fuel gauge or the Fuel Pump (FP) from full or partially filled fuel tanks.

20-9

- Before starting work, switch on exhaust extraction system and place an extraction h close to the installation opening of fuel tank extract escaping fuel fumes. If no exhaust extraction system is available, a radial fan (long as motor is not in air flow) with a displacement greater than 15 m^3/h can be used.

- Prevent fuel from contacting skin! Wear fuel resistant gloves!

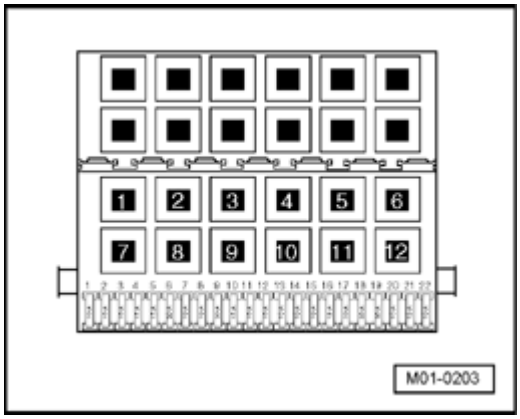

- For safety reasons, fuse no. 18 must be removed from fuse holder before opening fu supply system.

Rules of cleanliness

When working on the fuel supply or fuel injection systems, the following "5 rules of cleanliness" should be carefully observed:

- Thoroughly clean all connections and the surrounding area before disconnecting.
- Place parts that have been removed on a clean surface and cover them. Use lint-free cloths only!
- Carefully cover over opened components or seal, if repairs are not performed immediately.
- Only install clean components: Only unpack replacement parts immediately prior to installation. Do not use parts that have been stored loose (in tool boxes etc.)
- When the system is open: Avoid working with compressed air. Do not move vehicle unless absolutely necessary.

20-11

Fuel pump, removing and installing

Recommended special tools and equipment

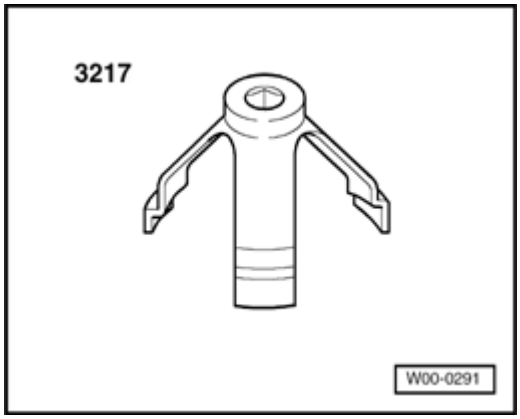

- 3217 Ring nut spanner

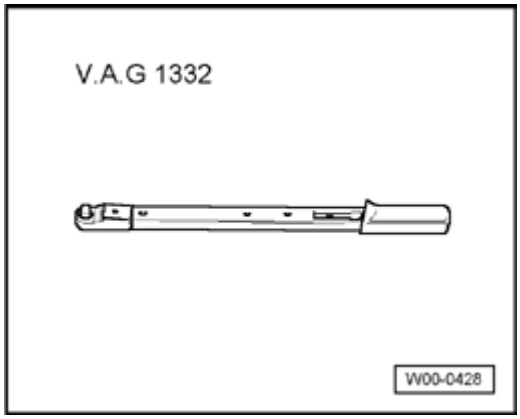

- V.A.G1332 Torque wrench (40 to 200 Nm)

Observe safety precautions ⇒ Page 20-8 .

Observe rules for cleanliness ⇒ Page 20-10 .

20-12

Requirements

- Parking brake must be engaged or else daylight driving lights will be switched on.
- Ignition switched off.
- Fuel tank must be drained.

Removing

- First determine whether a coded radio is installed. In this case, determine the anti-the coding.
- Switch ignition off and disconnect Battery Ground (GND) strap.
- Remove luggage compartment floor cover.
- Disconnect connector as well as supply and return line from flange.

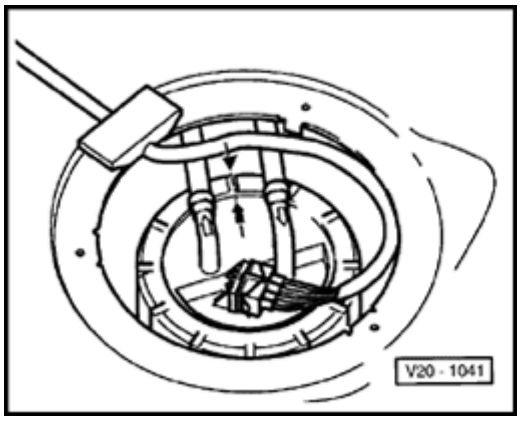

20-13

WARNING!

- ***The fuel or fuel lines in fuel system can become very hot (danger of scalding)!***

- ***In addition, the fuel system is under pressure! Before opening the system, place rags around the connection area and release pressure by carefully loosening the connection!***

- ***Wear protective goggles and protective gloves when working on the fuel system!***

- Seal off lines so that no dirt will get into fuel system.

- Use 3217 ring nut spanner to remove union nut.

- Pull flange and sealing ring from opening of fuel tank

- Loosen fuel pump from bayonet connection by turning toward left and remove.

Note:

When replacing Fuel Pump (FP) unit, empty old Fuel Pump (FP) unit before disposing.

Installing

Installation of the fuel pump is the reverse orde
of removal.

Note:

- *When inserting Fuel Pump (FP) unit into fue tank, be sure not to bend sender for fuel ga*
- *Coat seal with fuel when installing Fuel Pun (FP).*
- *Installed position of flange for Fuel Pump (F unit ⇒ Page 20-7 , ⇒ Fig. 1 .*
- *Make sure fuel lines are securely fastened.*
- *After installing Fuel Pump (FP) unit, check whether supply, return and ventilation lines still clipped in at fuel tank.*

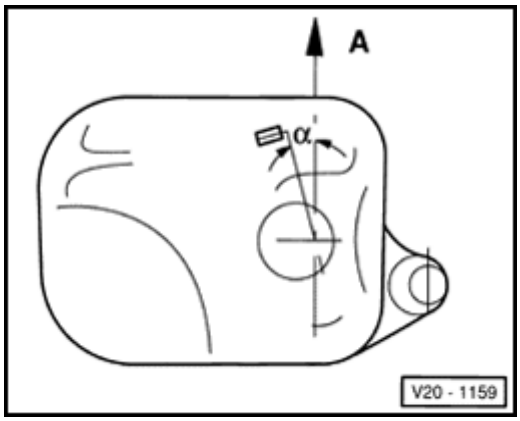

When the Fuel Pump (FP) unit is installed corr
the floater of sender for fuel gauge faces in driv
direction -A- as follows: Front Wheel Drive (FW
vehicles

Station wagon α = 5 to 10 °

Sedan α = 70 to 75 °

- Erase DTC memory of Engine Control Modu (ECM) ⇒ Page ST-26 , Diagnostic mode 4: Reset/erase diagnostic data.
- Generate readiness code ⇒ Page ST-52 .

20-15

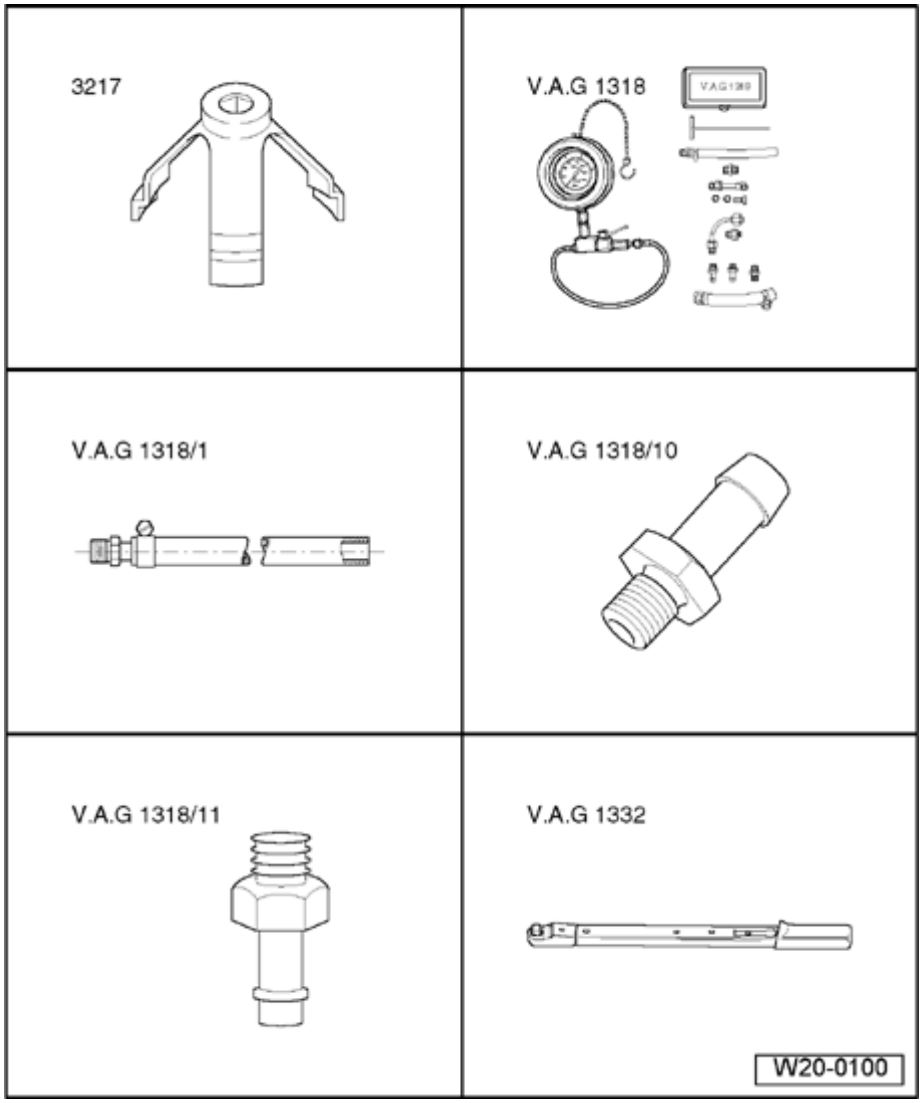

Fuel Pump (FP), checking

Recommended special tools and equipment

- 3217 Ring nut spanner
- V.A.G 1318 Pressure gauge
- V.A.G 1318/1 Hose
- V.A.G 1318/10 Adapter
- V.A.G 1318/11 Adapter
- V.A.G1332 Torque wrench (40 to 200 Nm)

20-16

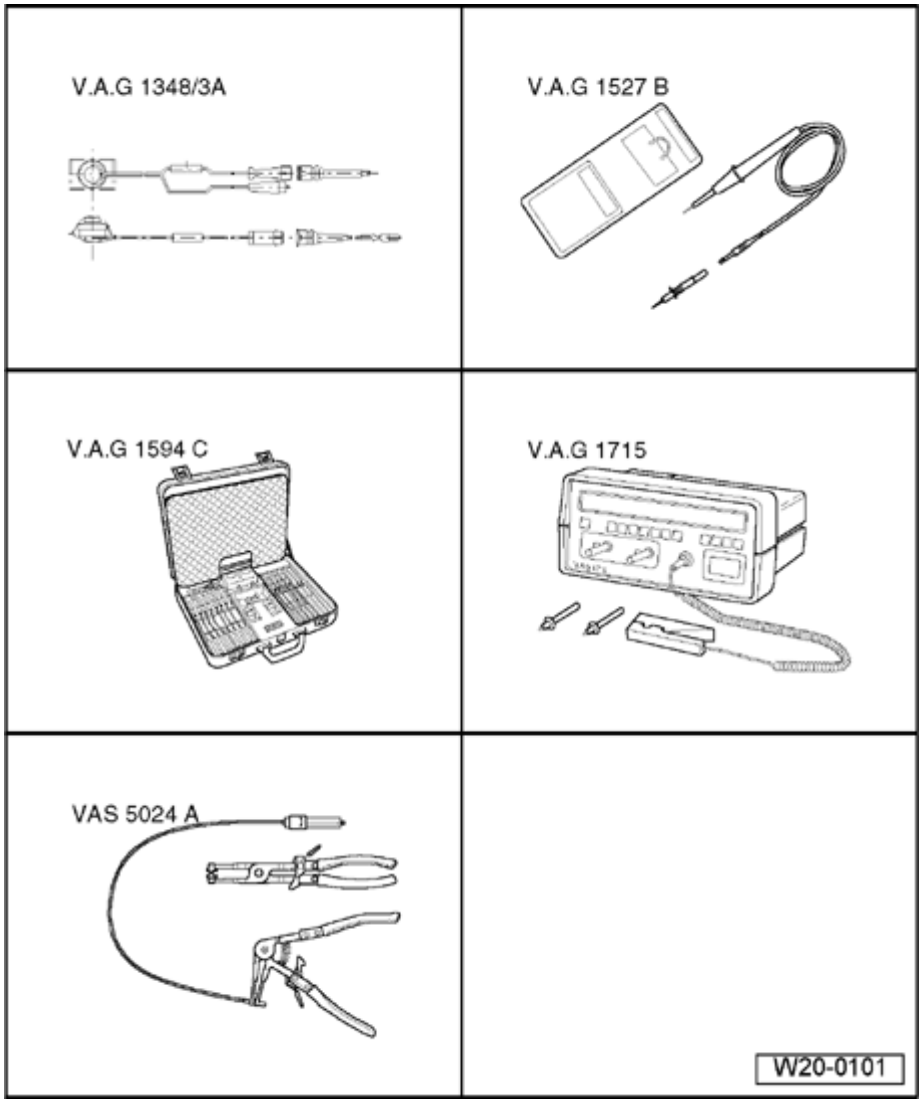

- V.A.G1348/3A Remote control with V.A.G1348/3-2 adapter cable
- V.A.G1527B Voltage tester
- V.A.G 1594 C Connector test kit
- V.A.G1715 Multimeter
- VAS5024A Assembly tool for spring-type clamps

Not illustrated:

- Measuring container
- Wiring diagram

20-17

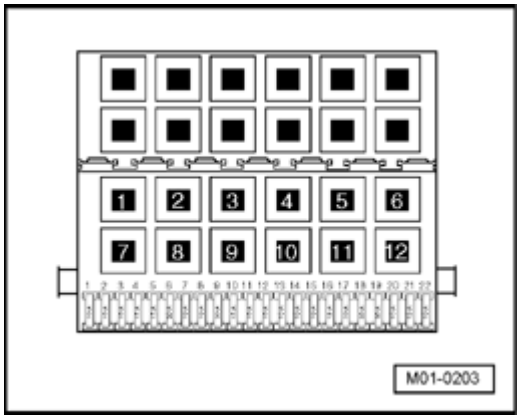

Test requirements

- Fuse no. 18 for Fuel Pump (FP) must be OK.
- Battery voltage must be at least 11.5 volts.
- Ground (GND) connections between engine, transmission, and chassis must be OK.
- All electrical consumers such as lights and rear window defroster must be switched off.
- Parking brake must be engaged or else daylight driving lights will be switched on.
- For vehicles with automatic transmission, selector lever must be in -P-.

Test sequence

- Switch on ignition.

Fuel Pump (FP) must briefly run audibly.

- Switch ignition off.

20-18

If Fuel Pump (FP) does not start up:

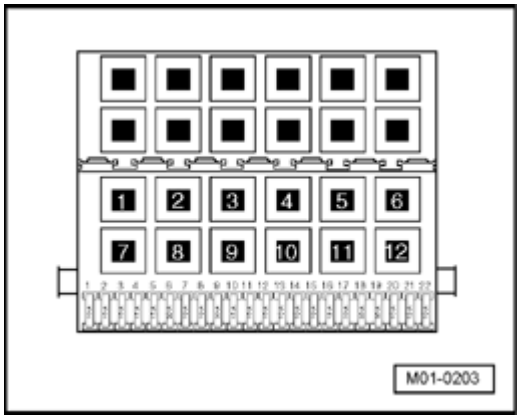

- Remove Fuel Pump (FP) Relay -J17- from relay carrier (relay position 12).

Note:

- *Remove battery Ground (GND) strap if tools are necessary for removal of relays or control modules from the relay carrier.*
- *Obtain radio code for radios with anti-theft coding before disconnecting battery.*
- *Do not use metallic tools to pry off relays from relay carrier. The terminals could conduct electricity.*

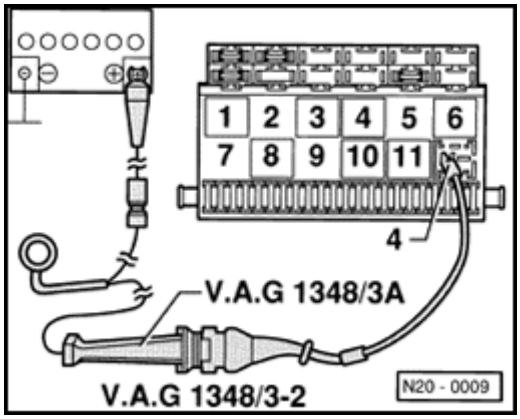

- Connect V.A.G 1348/3A remote control with V.A.G1348/3-2 remote control connection to terminal 4 and B+.
- Operate remote control.

If Fuel Pump (FP) runs:

- Check activation of Fuel Pump (FP) Relay -J17- according to wiring diagram:

⇒ *Electrical Wiring Diagrams, Troubleshooting & Component Locations*

20-19

If Fuel Pump (FP) does not run:

- Remove luggage compartment floor cover.

- Disconnect connector from flange on fuel tank.

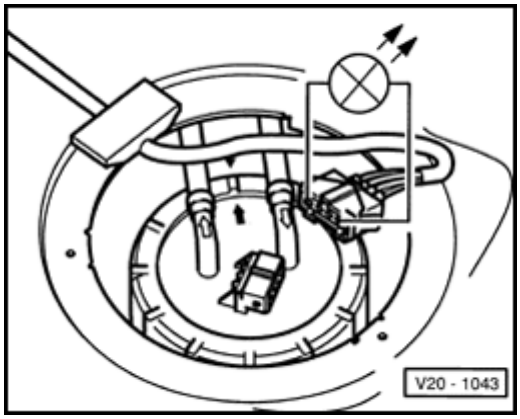

- Connect diode test lamp to outer terminals of connector.
- Operate remote control.

  LED must light up.

LED does not light up:

- Locate and repair open circuit using wiring diagram.

⇒ *Electrical Wiring Diagrams, Troubleshooting & Component Locations*

LED lights up (voltage supply OK):

- Remove fuel pump ⇒ Page 20-11 .
- Check whether electrical wires between flange and Fuel Pump (FP) are connected.

If there are no open circuits:

- Fuel Pump (FP) faulty, replace Fuel Pump (FP) ⇒ Page 20-11 , Fuel Pump (FP), removing and installing.

- Erase DTC memory of Engine Control Module (ECM) ⇒ Page ST-26 , Diagnostic mode 4: Reset/erase diagnostic data.

- Generate readiness code ⇒ Page ST-52 .

Checking fuel delivery

Test requirements

- Voltage supply OK

- V.A.G1348/3A remote control connected

Test sequence

- Remove fuel filler cap from fuel filler tube.

- Disconnect fuel supply line from fuel rail.

20-21

WARNING!

- ***The fuel or fuel lines in fuel system can become very hot (danger of scalding)!***
- ***In addition, the fuel system is under pressure! Before opening the system, pla rags around the connection area and rele pressure by carefully loosening the connection!***
- ***Wear protective goggles and protective gloves when working on the fuel system!***

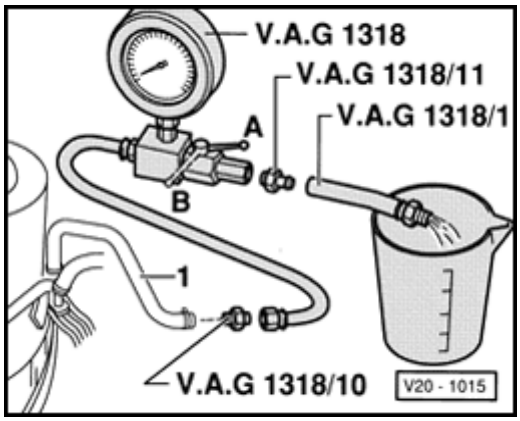

- Connect pressure gauge (V.A.G 1318) with adapter ((V.A.G 1318/10) to fuel supply line
- Connect V.A.G 1318/1 hose to V.A.G 1318/ adapter of pressure gauge and hold in a measuring container.
- Open shut-off valve of pressure gauge. Leve will point in direction of flow -A-.

20-22

- Operate remote control. Slowly close shut-of valve until on pressure gauge 3 bar positive pressure is indicated. Do not change positio shut-off valve any more.

- Empty measuring container.

- Delivery rate of Fuel Pump (FP) is depender battery voltage. Therefore, connect multimet vehicle battery using adapter cables.

- Operate remote control for 3 seconds long.

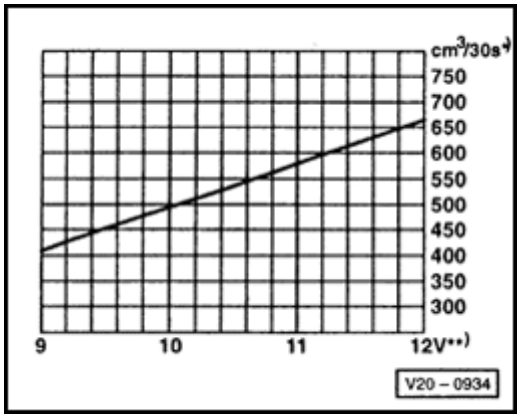

- Compare fuel quantity pumped with specifie value.

*) Minimum delivery rate cm^3/30 s

**) Voltage at Fuel Pump (FP) with engine off a pump running (approx. 2 volts less than battery voltage).

Read-out example:

During test, a voltage of 12.5 volts is measurec battery. Since the voltage at the pump is appro volts less than battery voltage, there is a minim delivery rate of 530 cm^3/30 s.

20-23

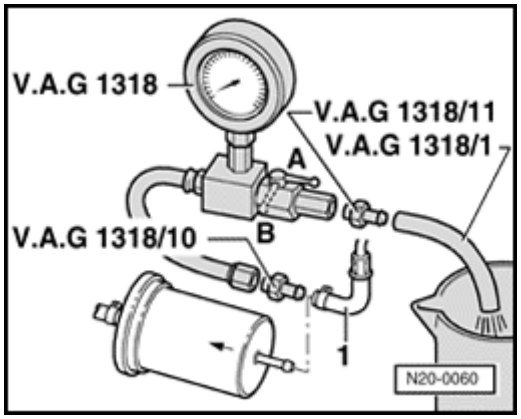

If minimum delivery rate is not obtained:

- Check fuel lines for possible restrictions (kinl or clogging.

- Disconnect supply hose -1- from fuel filter in

WARNING!

- ***The fuel or fuel lines in fuel system can become very hot (danger of scalding)!***
- ***In addition, the fuel system is under pressure!Before opening the system, pla rags around the connection area and rele pressure by carefully loosening the connection!***
- ***Wear protective goggles and protective gloves when working on the fuel system!***

- Connect pressure gauge (V.A.G 1318) to ho using adapter ((V.A.G 1318/10).

- Repeat test of delivery quantity.

20-24

If minimum delivery rate is obtained now:

- Replace fuel filter ⇒ Page 20-6 item 24 , removing and installing fuel tank with attachments and fuel filter

If minimum delivery rate is still not obtained:

- Remove fuel delivery unit ⇒ Page 20-11 and check filter strainer for dirt.

Only if no malfunctions have been found yet:

- Fuel Pump (FP) faulty, replace Fuel Pump (FP) unit ⇒ Page 20-11 , Fuel Pump (FP) unit, removing and installing.

- Erase DTC memory of Engine Control Module (ECM) ⇒ Page ST-26 , Diagnostic mode 4: Reset/erase diagnostic data.

- Generate readiness code ⇒ Page ST-52 .

Delivery rate has been obtained, but malfunctions are still suspected in the fuel supply (e.g. sporadic loss of fuel supply):

- Reconnect all disconnected fuel lines.

- Check current pick-up of Fuel Pump (FP) ⇒ Page 20-25 .

20-25

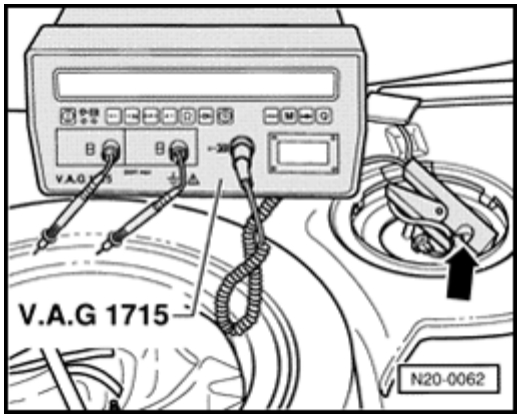

Current pick-up of Fuel Pump (FP), checking

- Connect multimeter with current probe to red/yellow wire of wiring harness.
- Start engine and let run at idle.
- Measure Fuel Pump (FP) current draw.

  Specified value: max. 8 amperes

Note:

If malfunction in fuel system is sporadic, test can also be performed during a road test, but a second person is required.

If current draw is exceeded:

- Fuel Pump (FP) faulty, replace Fuel Pump (FP) unit ⇒ Page 20-11 , Fuel Pump (FP) unit, removing and installing.
- Erase DTC memory of Engine Control Module (ECM) ⇒ Page ST-26 , Diagnostic mode 4: Reset/erase diagnostic data.
- Generate readiness code ⇒ Page ST-52 .

20-26

Fuel Pump (FP) check-valve, checking

Test requirements

- Remote control connected
- Pressure gauge is still connected.

Test sequence

Note:

This test also checks the connections of the fuel supply line from Fuel Pump (FP) unit to connection point of pressure gauge for proper seal.

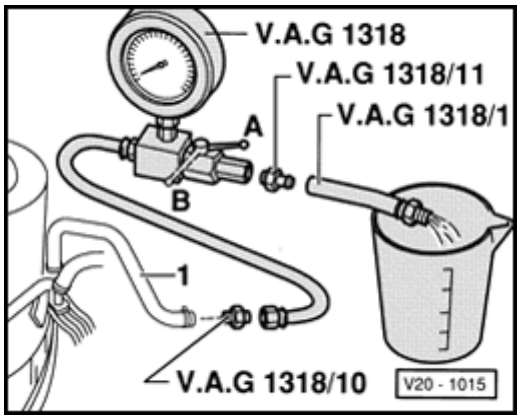

- Close pressure gauge shut-off valve (lever perpendicular to direction of flow, -position B-).
- Operate remote control in short intervals until a positive pressure of approx. 3.0 bar has built up.
- If excess pressure is built up, reduce pressure by carefully opening shut-off valve.

WARNING!

Danger of spray when opening shut-off valve. Hold container in front of open connection on pressure gauge.

- Observe pressure drop on pressure gauge. Pressure must not fall below 2 bar.

If pressure drops further:

- Check line connections for proper seal.

If no malfunctions are found in wires:

- Fuel Pump (FP) faulty, replace Fuel Pump (FP) unit ⇒ Page 20-11 , Fuel Pump (FP) unit, removing and installing.

- Re-connect all disconnected fuel lines.

- Erase DTC memory of Engine Control Module (ECM) ⇒ Page ST-26 , Diagnostic mode 4: Reset/erase diagnostic data.

- Generate readiness code ⇒ Page ST-52 .

EVAP canister system

Note:

- *Hose connections are secured with screw-type clamps, spring-type clamps or tensioning clamps.*
- *Always replace tensioning clamps with spring-type clamps or screw-type clamps.*
- *Fuel hoses at engine must only be secured with spring-type clamps. The use of clamping collars or screw clamps is not permitted.*
- *Components marked with * are tested via On Board Diagnostic (OBD) ⇒ Page ST-22 , Diagnostic mode 3: Check DTC memory.*
- *VAS5024A spring clip installation tool is recommended for installing spring-type clips.*

Observe safety precautions ⇒ Page 20-8 .

Observe rules for cleanliness ⇒ Page 20-10 .

Removing and installing components of the EVAP canister system ⇒ Page 20-29 .

Fuel tank ventilation, checking ⇒ Page 20-31 .

20-29

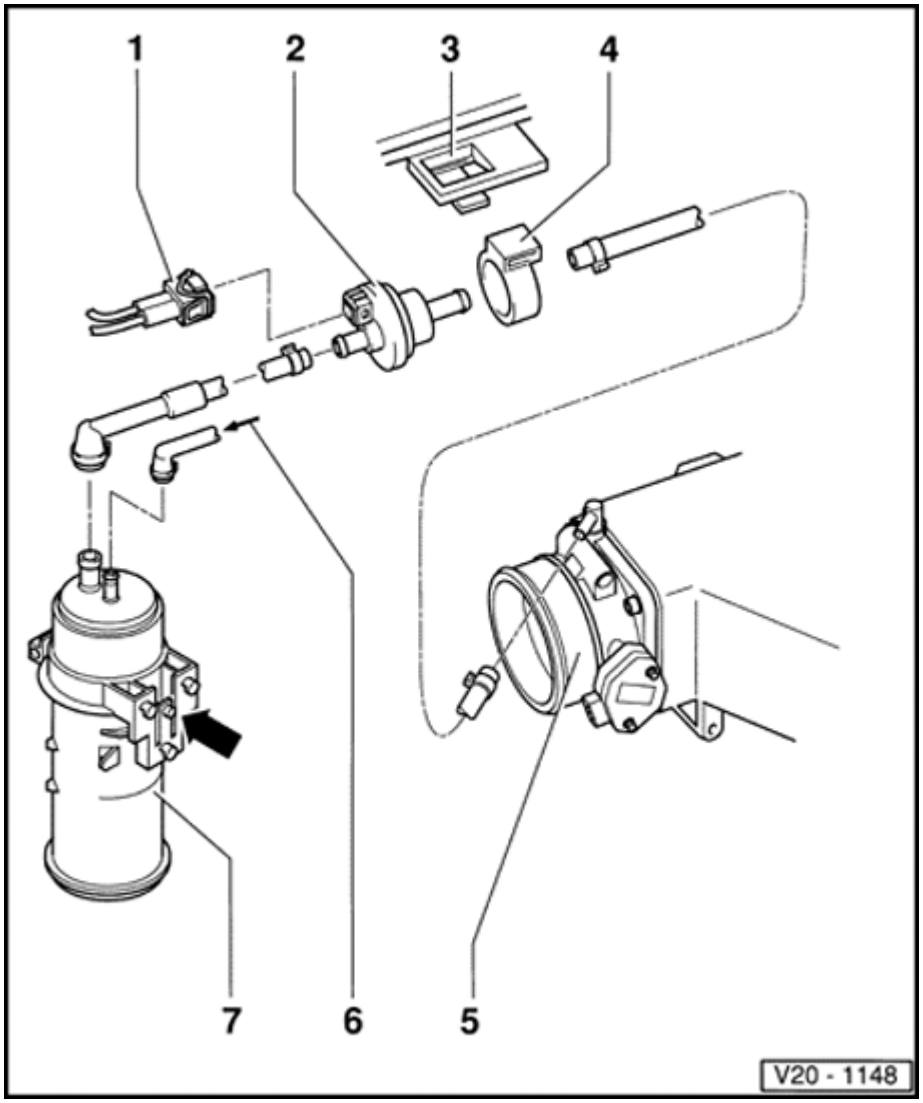

EVAP canister system components, removing and installing

1 - Connector

- Black, 2-pin

2 - Evaporative Emission (EVAP) Canister Purge Regulator Valve -N80- *

- Black
- Installation position: (Arrow) points in direction of flow
- Checking ⇒ Page 20-34

3 - Bracket

- At lower section of air filter

4 - Retaining ring

5 - Throttle valve connection

6 - Ventilation line

- Check for secure seating
- From gravity valve at fuel tank ⇒ Page 20-6 , item 27

20-30

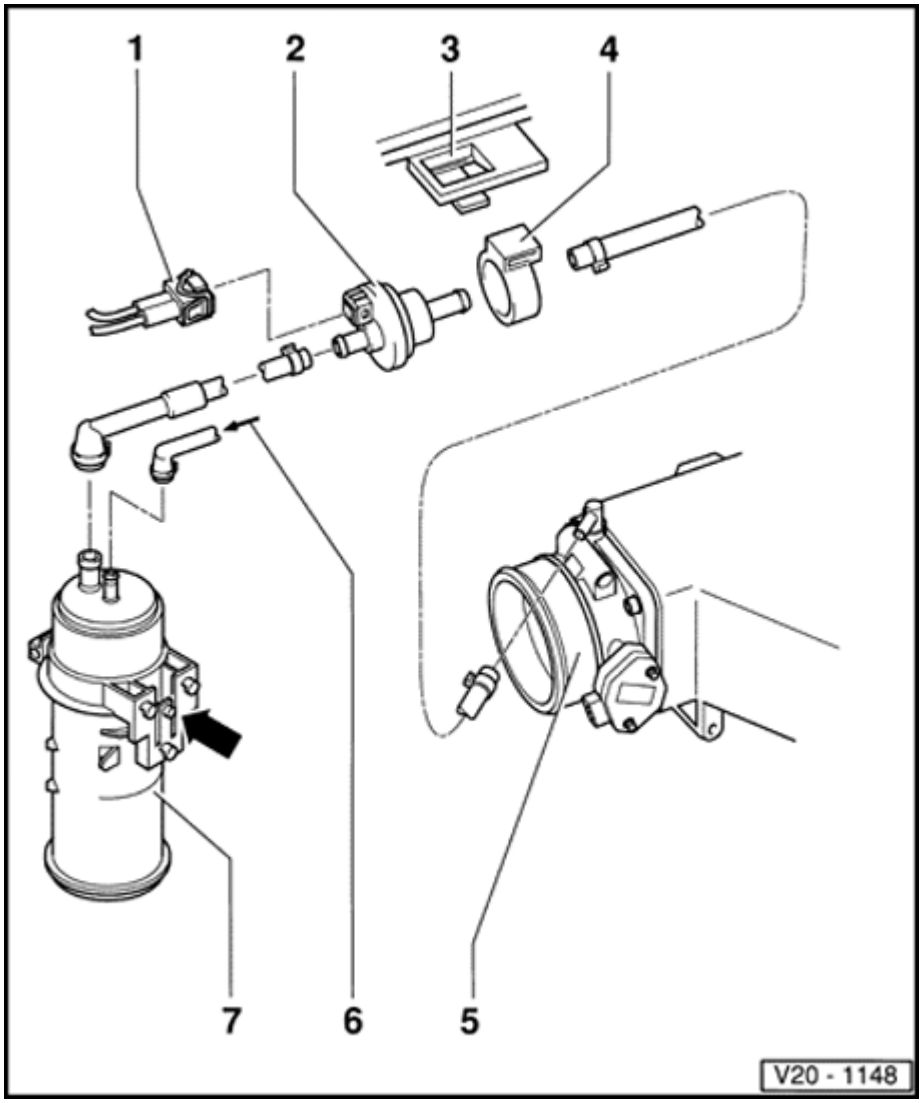

7 - EVAP canister

- Component location: in wheelhousing, right front
  - To remove, press securing tab in direction of (arrow)

20-31

Fuel tank ventilation, checking

Recommended special tools and equipment

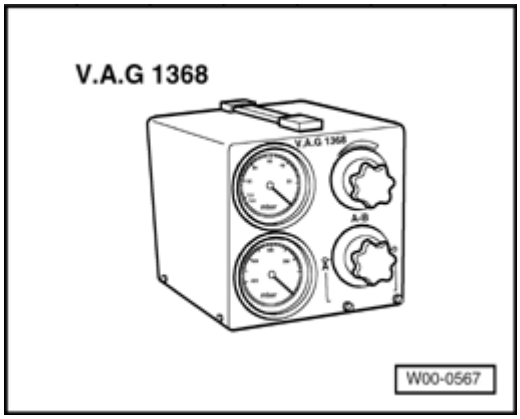

- V.A.G 1368 Vacuum tester

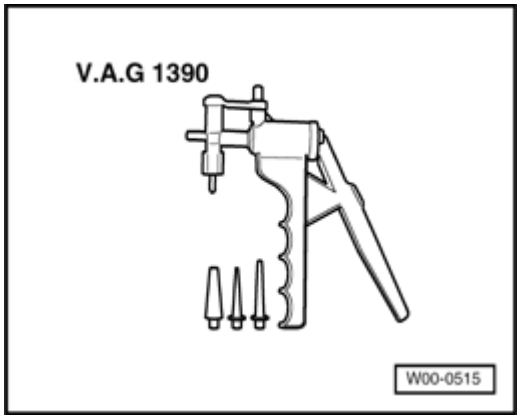

- V.A.G1390 Hand vacuum pump

Test required

- Ignition switched off

20-32

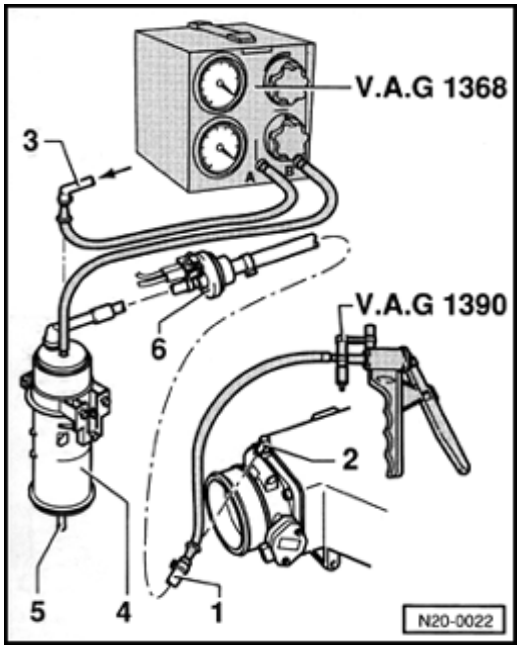

Test sequence

- Remove air filter ⇒ Page 24-7 , item 1 .

- Disconnect bleeder hose to EVAP canister -4- at Evaporative Emission (EVAP) Canister Purge Regulator Valve -N80- (-6-).
- Connect hand vacuum pump to hose.
- Disconnect bleeder hose -3- (from fuel tank) at EVAP canister -4- and connect to vacuum tester ((V.A.G 1368) connection -A-.
- Connect vacuum tester ((V.A.G 1368) connection -B- to connection on EVAP canister.
- Set vacuum tester to position -B-.
- Operate vacuum pump several times. There must be no vacuumbuilding up.

If vacuum builds up:

- Check breather connection -5- at EVAP canister -4- for soiling, clean if necessary.
- Check Evaporative Emission (EVAP) Canister Purge Regulator Valve -N80- (-6-) for throughput, replace if necessary.

20-33

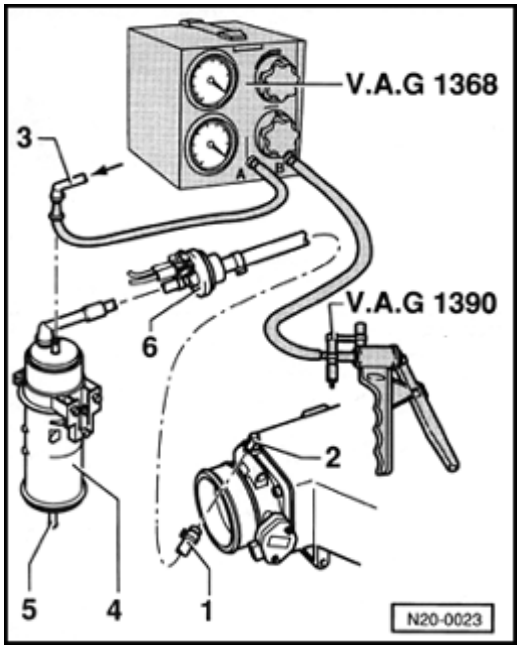

If no vacuum builds up:

- Remove fuel filler cap from fuel filler tube.

- Connect hand vacuum pump to vacuum tester connection -B-.
- Set vacuum tester to position -A/B-.
- Operate Vacuum pump several times. There must be no vacuumbuilding up.

If vacuum builds up:

- Check gravity valve ⇒ Page 20-6 , item 28 .
- Check line -3- from fuel tank for throughput.

If no vacuum builds up:

- Screw fuel filler cap on fuel filler tube.
- Operate vacuum pump several times. There must be no vacuumbuilding up.

Note:

At a low fuel level in fuel tank, hand vacuum pump must be operated at least 20 to 30 times.

If vacuum builds up:

- Replace fuel filler cap for fuel filler tube.

20-34

Evaporative Emission (EVAP) canister purge regulator valve 1, checking

Solenoid valve is closed when no voltage is present.

Recommended special tools and equipment

- V.A.G1526 Multimeter or V.A.G1715 multimeter
- V.A.G1594 Connector test kit
- Wiring diagram

20-35

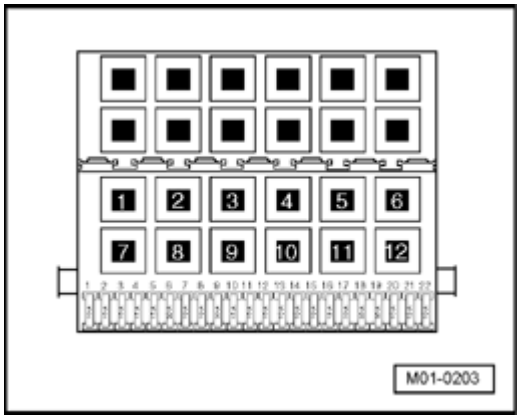

Test requirements

- The respective fuses of Evaporative Emission (EVAP) Canister Purge Regulator Valve -N80- must be OK:

⇒ *Electrical Wiring Diagrams, Troubleshooting & Component Locations*

- Ground (GND) connections between engine, transmission and chassis must be OK.
- Ignition switched off.

Test sequence

- Disconnect 2-pin connector from Evaporative Emission (EVAP) Canister Purge Regulator Valve -N80- ⇒ Page 20-29 , item 1 .

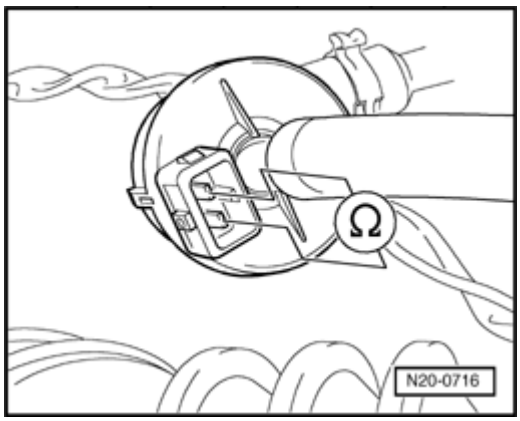

- Measure resistance between terminals of solenoid valve.

  Specified value: 22.0 to 30.0 Ω

If specified value is not obtained:

- Replace Evaporative Emission (EVAP) Canister Purge Regulator Valve -N80- ⇒ Page 20-29 , item 2 .
- Erase DTC memory of Engine Control Module (ECM) ⇒ Page ST-26 , Diagnostic mode 4: Reset/erase diagnostic data.
- Generate readiness code ⇒ Page ST-52 .

20-36

If specified value is obtained:

- Check wires according to wiring diagram ⇒ Page 20-36 .

Checking wiring

- Connect test box to control module wiring harness ⇒ Page ST-11 , connect test box fo wiring test.

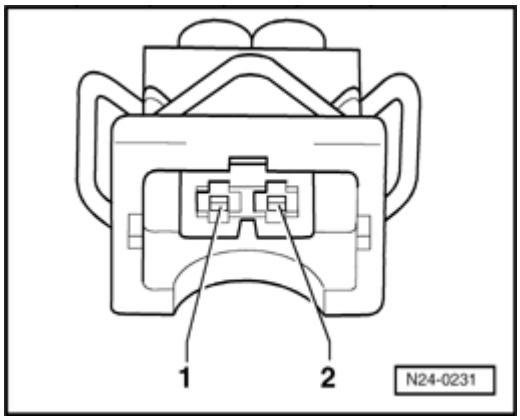

- Check wire between test box socket 31 + 2-p connector terminal 2 for open circuit accordi to wiring diagram.

  Wire resistance: max. 1.5 Ω

- Check the wire for short circuit to B+ and Ground (GND).

  Specified value: ∞ Ω

- Check wire between 2-pin connector termina and the Fuel Pump (FP) Relay -J17- for ope circuit according to wiring diagram.

  Wire resistance: max. 1.5 Ω

- Erase DTC memory from Engine Control Mo (ECM) ⇒ Page ST-26 , Diagnostic mode 4: Reset/erase diagnostic data.
- Generate readiness code ⇒ Page ST-52 .

If no malfunctions are found in wires:

- Replace Motronic Engine Control Module (E -J220- ⇒ Page 24-105 .

20-37

Accelerator Pedal (AP) cable, adjusting

Vehicles with manual transmission

Requirement

- Ignition switched off

Procedure

- Press accelerator pedal to Wide Open Throt (WOT) position.

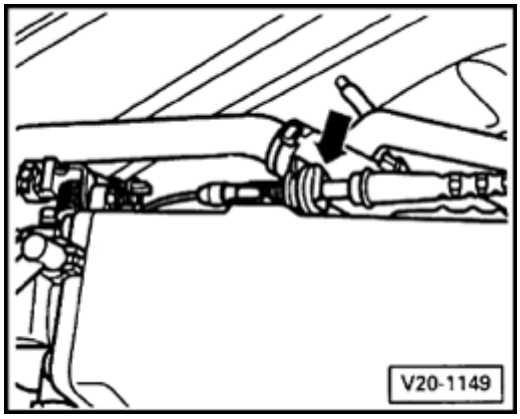

- Adjust accelerator pedal cable via swapping positioning clip at support bracket so that Wi Open Throttle (WOT) position is just reachec cable pulley of throttle valve control module.
- Release accelerator pedal.

20-38

Vehicles with automatic transmission

Recommended special tools and equipment

- Spacer piece 15 mm
- V.A.G1526 Multimeter or V.A.G1715 multimeter
- V.A.G1594 Connector test kit

Requirement

- Ignition switched off

Procedure

Test sequence

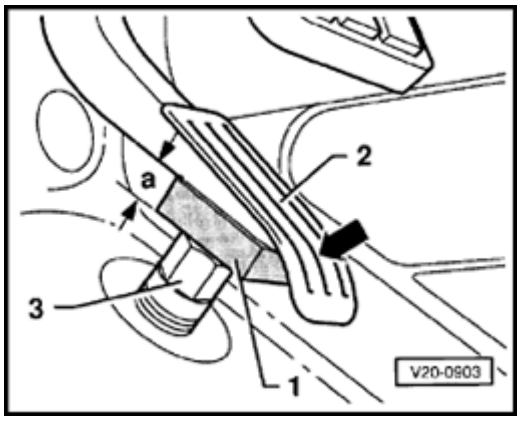

- Spacer piece -1-, a = 15 mm, clamp between accelerator pedal -2- and stop -3- and hold accelerator pedal firmly in this position.

20-39

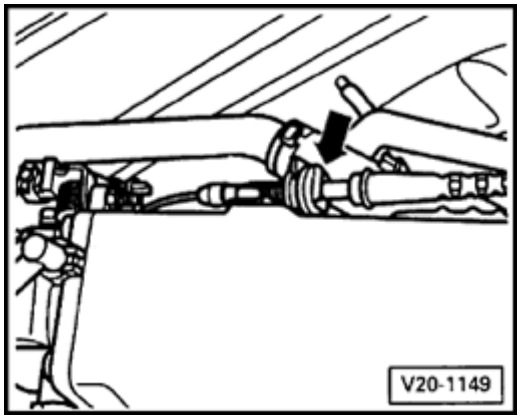

- Adjust accelerator pedal cable via swapping of positioning clip at support bracket so that Wide Open Throttle (WOT) position is reached on throttle valve lever.
- Release accelerator pedal.

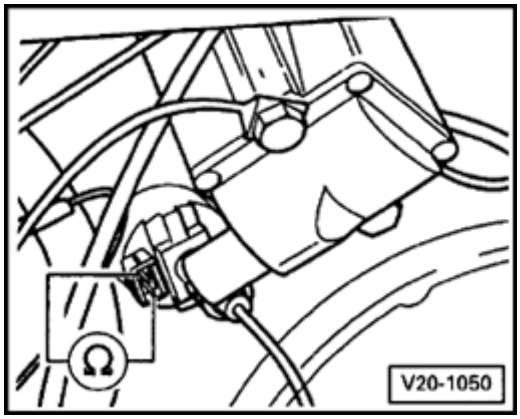

- Connect hand multimeter with adapter cables to Kick Down Switch - F8-.
- Measure resistance at switch.

  Specified value: ∞ Ω (no continuity)
- Move accelerator pedal slowly in direction of Wide Open Throttle (WOT).
  - Shortly after kickdown point, resistance must sink to 0 Ω (continuity).
  - For this, accelerator pedal must be slightly before stop.

24-1

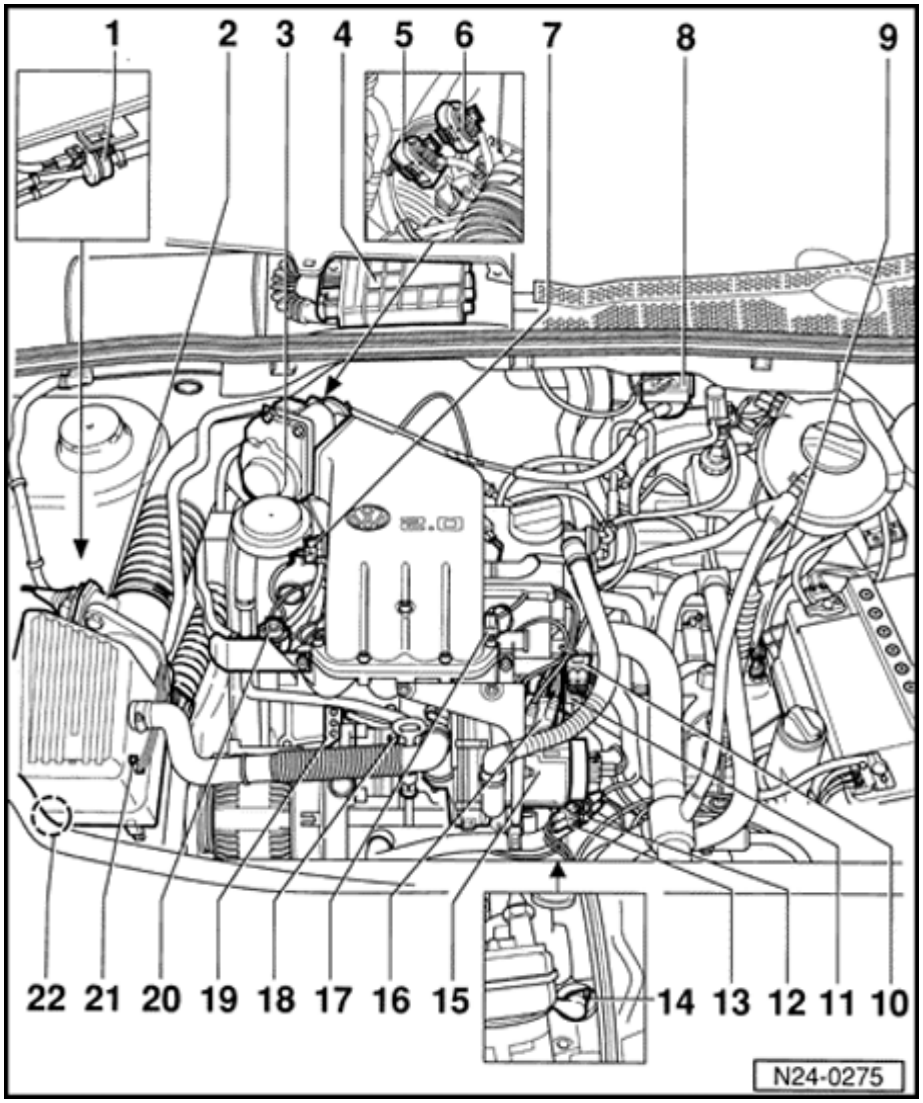

Motronic fuel injection and ignition system

Overview of component locations

Note:

*Components marked with * are tested via On Board Diagnostic (OBD) ⇒ Page ST-22 , Diagnostic mode 3: Check DTC memory.*

1 - Evaporative Emission (EVAP) Canister Purge Regulator Valve -N80-*

- ⇒ Page 20-29 , item 2

2 - Mass Air Flow (MAF) Sensor - G70-*

3 - Throttle valve control

module - J338-*

4 - Engine Control Module (ECM)*

(control module for Motronic Engine Control Module (ECM) - J220-)

- Component location: in plenum chamber
  - 68-pin connector
  - Checking voltage supply ⇒ Page 24-101
  - Replace ⇒ Page 24-105

24-2

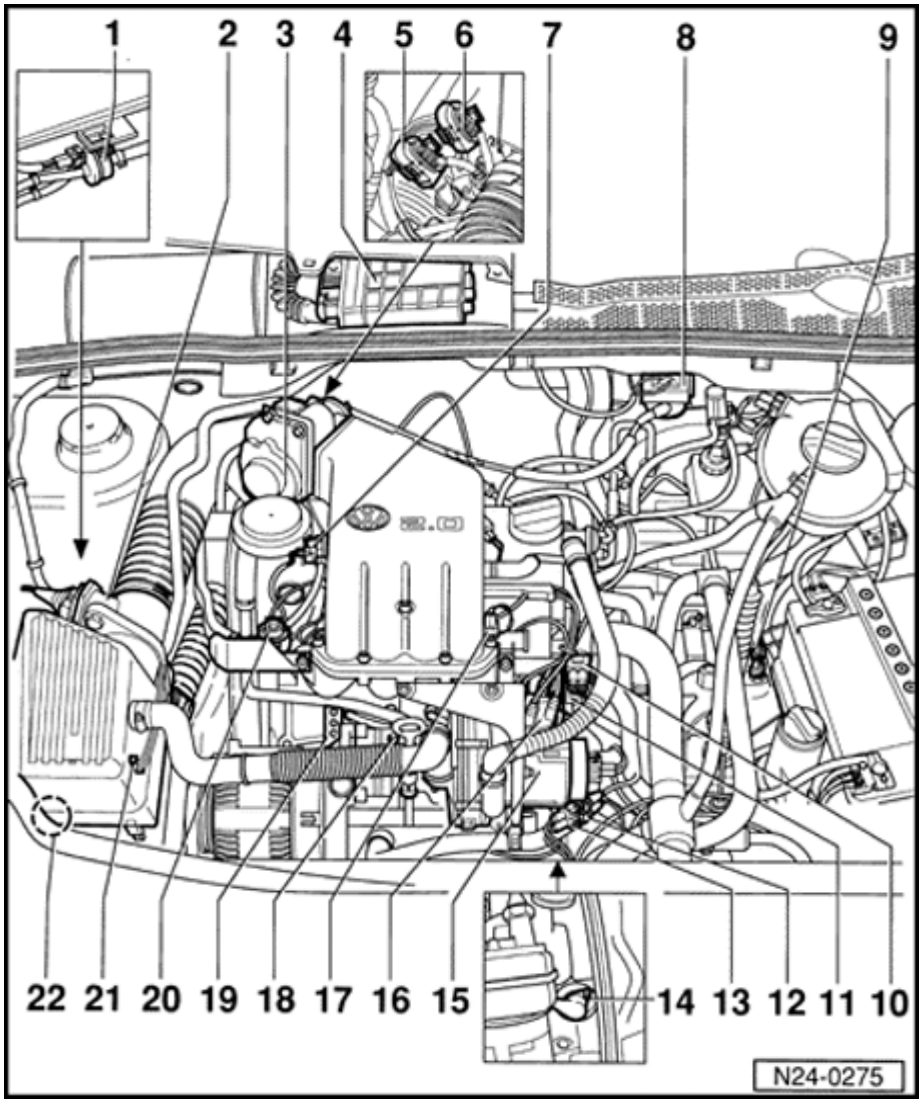

5 - 4-pin harness connector

- Brown
- For Heated Oxygen Sensor (HO2S) 2 -G108- and oxygen sensor heater

6 - 4-pin harness connector

- Black
- For Heated Oxygen Sensor (HO2S) -G39- and oxygen sensor heater

7 - Intake Air Temperature (IAT) Sensor -G72-*

8 - Ignition Coil - N152-

- ⇒ Page 28-4 , item 7

9 - Speedometer Vehicle Speed

Sensor (VSS) -G22-

- Checking ⇒ Page 24-106 , checking speed signal

24-3

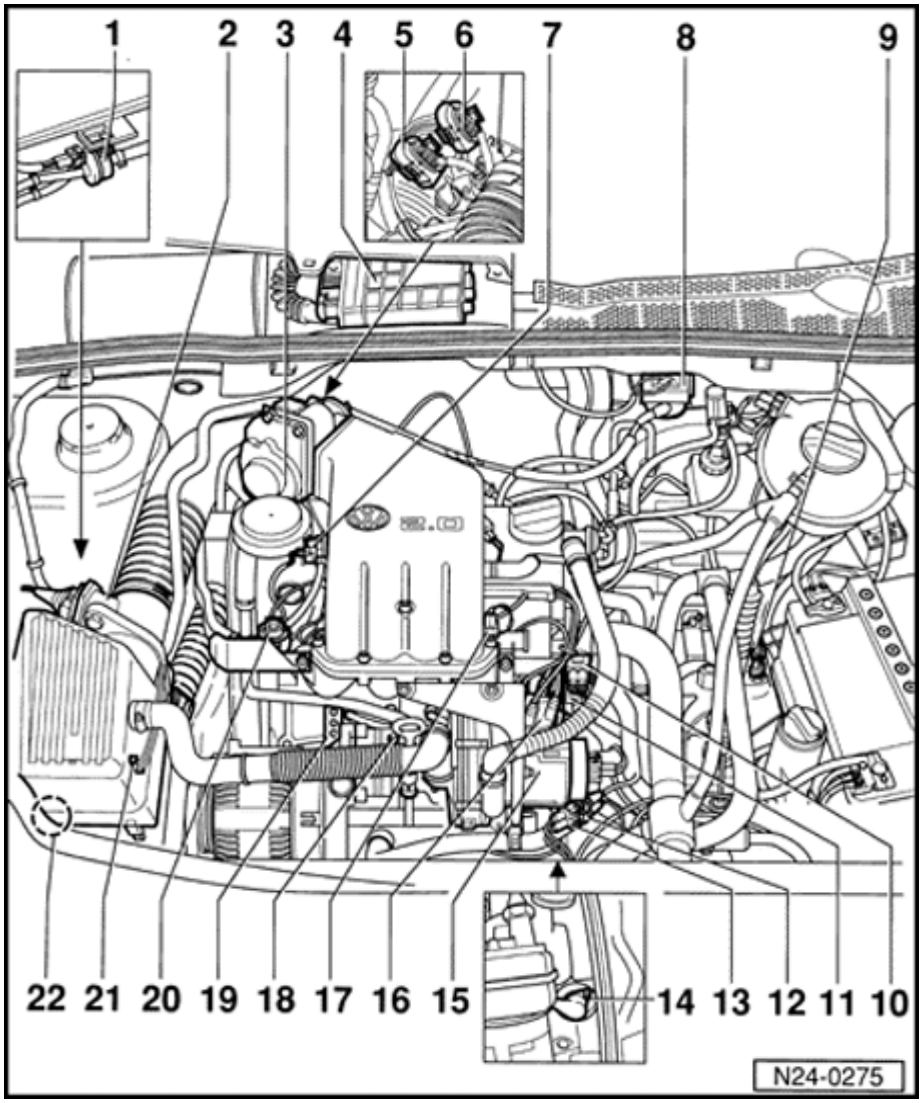

10 Engine - Coolant Temperature (ECT) Sensor - G62-*

- Black
- For Engine Control Module (ECM)

- With Engine Coolant Temperature (ECT) Sensor (G2)
  - If necessary, release pressure in cooling system before removing

11 - Central harness connector

12 - 3-pin harness connector

- For Knock Sensor (KS) 1 - G61-
- Blue

13 - 3-pin harness connector

- For Engine Speed (RPM) Sensor - G28-

14 - Engine Speed (RPM) Sensor - G28-*

15 - Secondary Air Injection (AIR) pump motor - V101-*

- ⇒ Page 26-15 , item 12

24-4

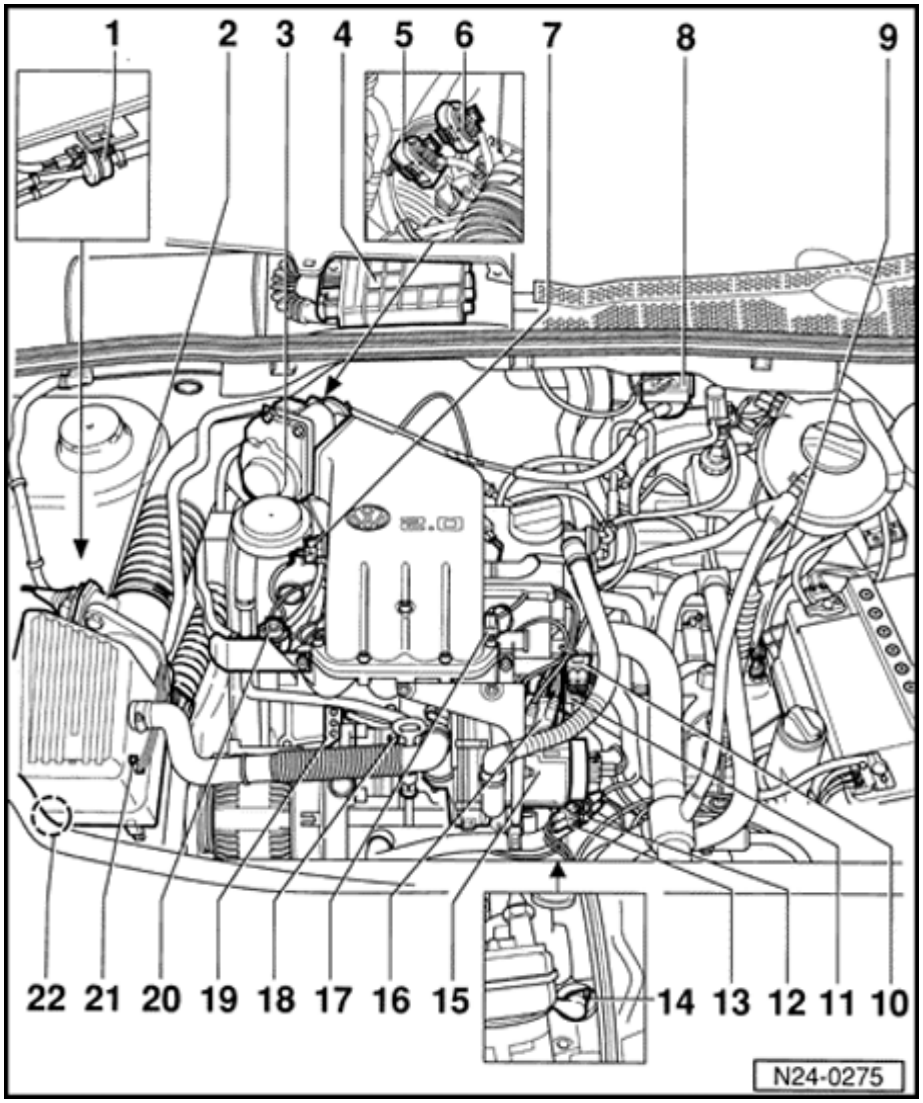

16 - Distributor with Camshaft Position (CMP) Sensor - G40-*

- ⇒ Page 28-5 , item 17

17 - Fuel injectors (-N30- through -N33-)*

18 - Knock Sensor (KS) 1 - G61-*

- ⇒ Page 28-4 , item 10

19 - Ground (GND) connection

20 - Fuel pressure regulator

21 Temperature - regulator

- For intake air pre-heating

22 - EVAP canister

- ⇒ Page 20-30 , item 7

General Notes on Fuel Injection

Servicing ignition ⇒ Page 28-1 .

Note:

- *Engine Control Module (ECM) is equipped with On Board Diagnostic (OBD). Always check DTC memory first, before performing repairs or troubleshooting. Vacuum hoses and connections should also be checked (false air).*
- *For the electric components to work properly, a voltage of at least 11.5 V is required.*
- *Do not use any silicone sealant. Traces of silicone components which are sucked into the engine are not burned there, and they damage the oxygen sensor.*
- *The battery must only be disconnected and connected with the ignition switched off, since the Engine Control Module (ECM) can be damaged.*
- *Fuel hoses at engine must be secured with spring-type clamps. The use of clamping collars or screw clamps is not permitted.*

24-6

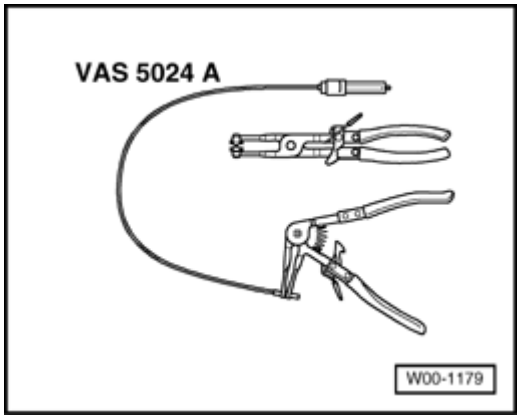

- *VAS5024A spring clip installation tool is recommended for installing spring-type clips.*
- *Components marked with * are tested via On Board Diagnostic (OBD) ⇒ Page ST-22 , Diagnostic mode 3: Check DTC memory.*
- *It is possible that the control module will recognize a malfunction and store a DTC during some tests. The following work procedures must be performed in the mentioned sequence after ending all tests and repairs.*
  - *- Check DTC memory ⇒ Page ST-22 , Diagnostic mode 3: Check DTC Memory,*
  - *- Erase DTC memory ⇒ Page ST-26 , Diagnostic mode 4: Reset/erase diagnostic data*
  - *- For completion, generate readiness code ⇒ Page ST-52 .*

Safety precautions ⇒ Page 24-21 .

Rules of cleanliness ⇒ Page 24-23 .

Technical data ⇒ Page 24-24 .

24-7

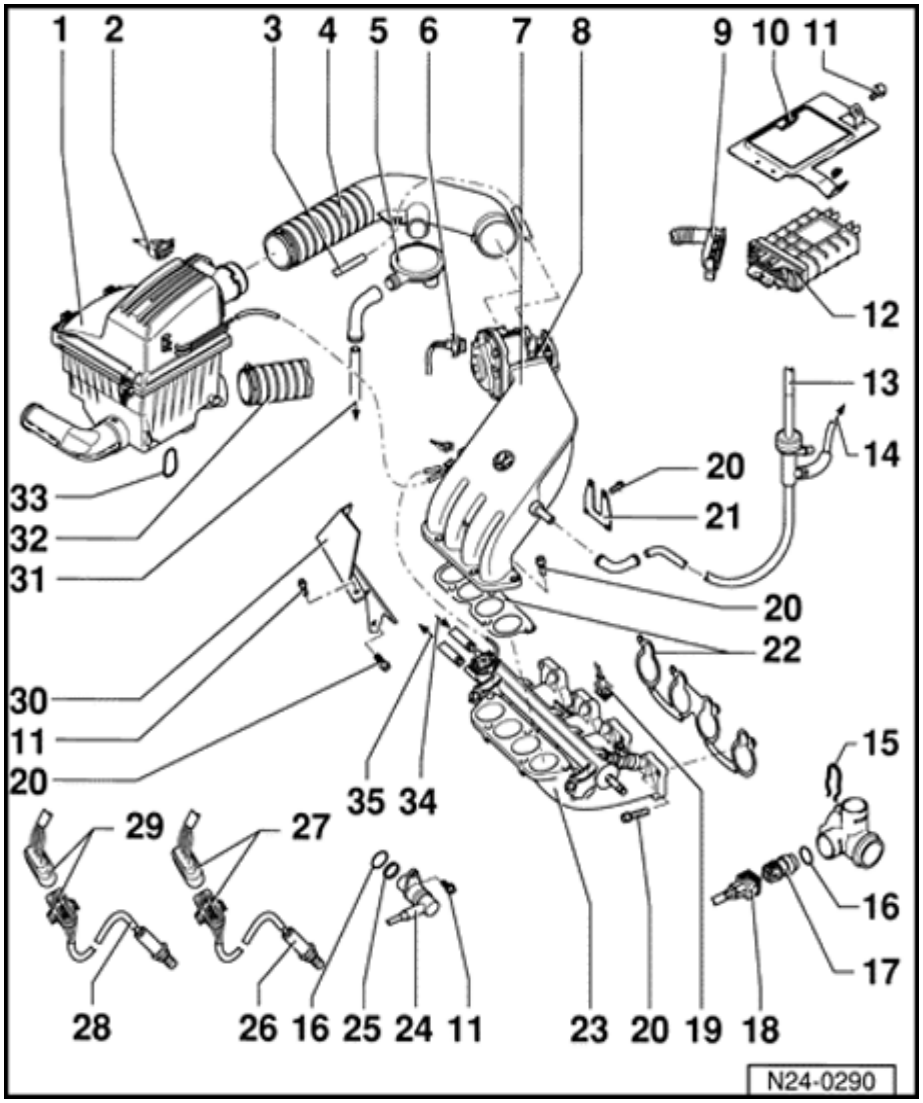

Fuel injector parts, servicing

1 - Air filter

- Disassembling and assembling ⇒ Page 24-19

2 - Connector

- 4 pin
- For Mass Air Flow (MAF) Sensor - G70-

3 - Ventilation line

- Check for secure seating
- From Evaporative Emission (EVAP) Canister Purge Regulator Valve ⇒ Page 20-29 , item 2

4 - Intake hose

- Check for secure seating
- Note installed position

- Secure with spring clamps

5 - Pressure regulator valve for crankshaft housing ventilation

24-8

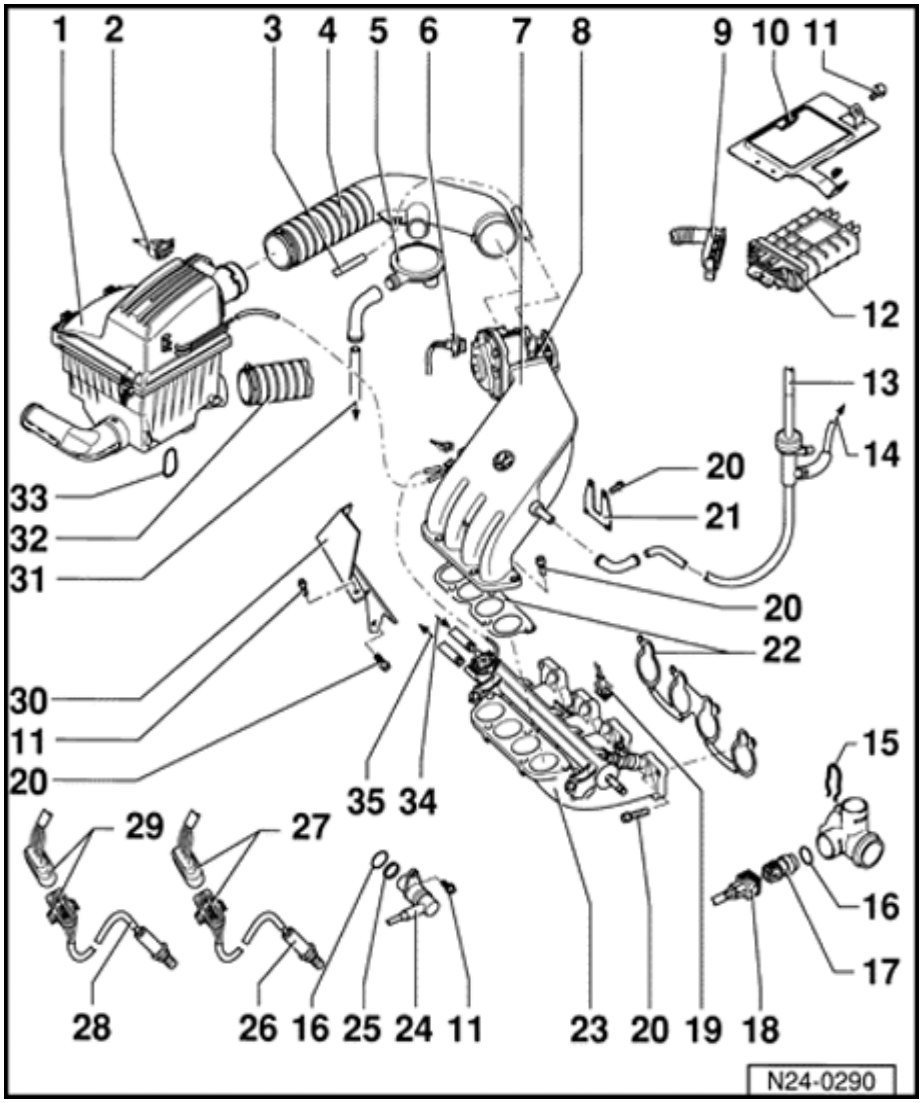

6 - Connector

- 8-pin
- For Throttle Valve Control Module - J338-

7 - Upper part of intake manifold

- First tighten at lower section of intake manifold, then tighten both rear supports ⇒ item 21

- Disassembling and assembling ⇒ Page 24-15

8 - Throttle valve control module - J338-*

- Removing and installing ⇒ Page 24-15 , disassembling and assembling intake manifold upper section

- Checking ⇒ Page 24-36

9 - Connector

- 68-pin

- Switch ignition off before disconnecting or connecting connector

24-9

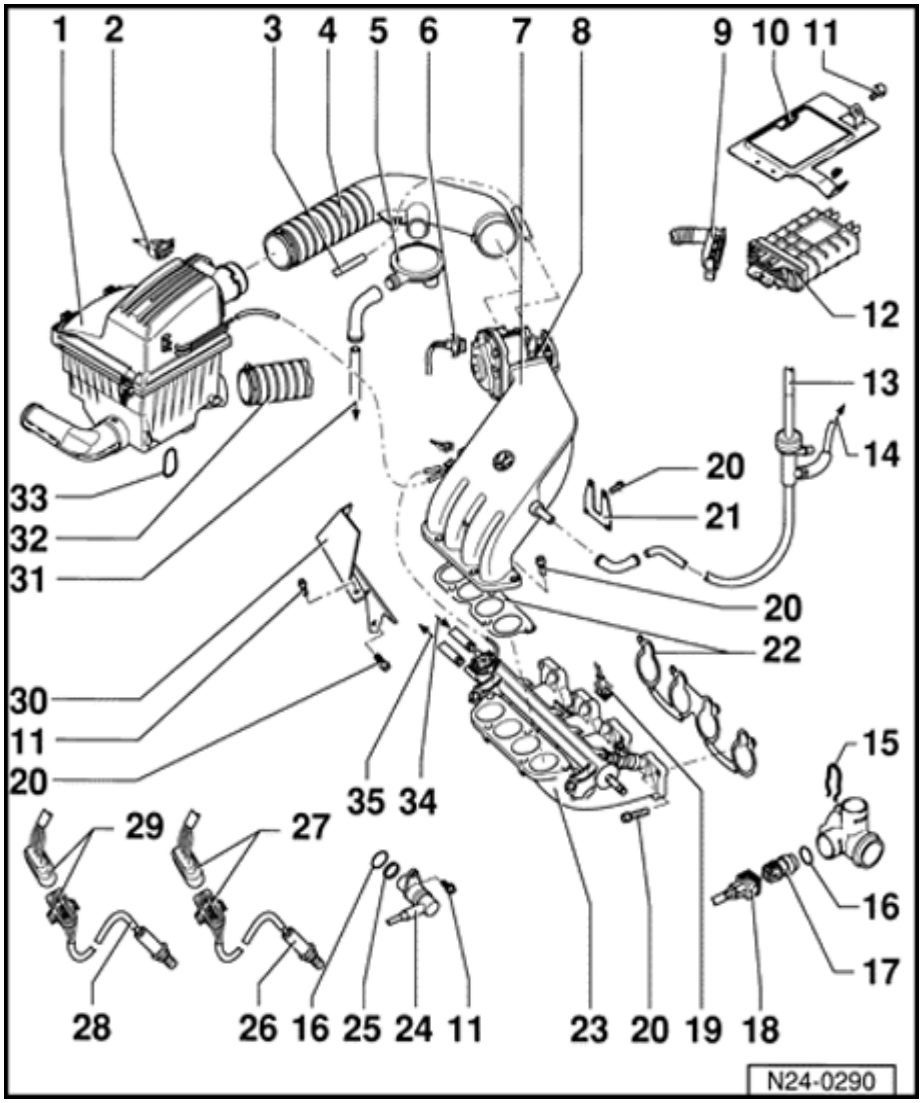

10 - Securing plate

- For Motronic Engine Control Module (ECM) - J220-

11 - 10 Nm

12 - Motronic Engine Control Module (ECM) - J220-*

- Component location: In plenum chamber, right side

- For fuel injection system, oxygen sensor control, EVAP canister purge regulator valve 1, engine speed limitation via Fuel Pump (FP) relay, idle stabilization, ignition as well as On Board Diagnostic

(OBD)

- Checking voltage supply ⇒ Page 24-101
- Replace ⇒ Page 24-105

13 - From brake booster

14 - To A/C system

15 - Retaining clip

- Check for secure fitting

24-10

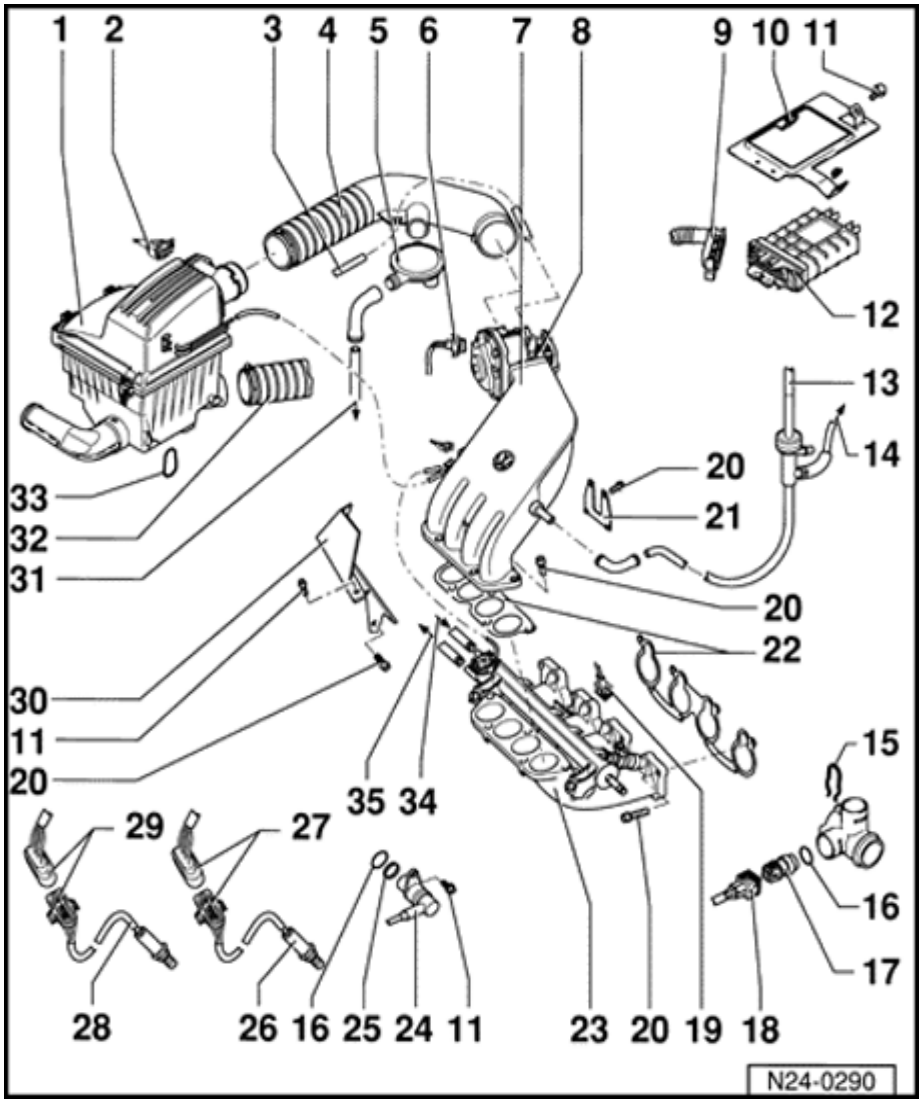

16 - O-ring

- Replace if damaged

17 Engine - Coolant Temperature (ECT) Sensor - G62-*

- For Engine Control Module (ECM)
- 4 pin

- With Engine Coolant Temperature (ECT) Sensor -G2-
  - If necessary, release pressure in cooling system before removing
  - Checking ⇒ Page 24-44

18 - Connector

- 4 pin

19 - Connector

- 2-pin
- For fuel injectors

(Cylinder 1 Fuel Injector - N30- through Cylinder 4 Fuel Injector - N33-)

20 - 20 Nm

21 - Support

- Between upper part of intake manifold and cylinder head

24-11

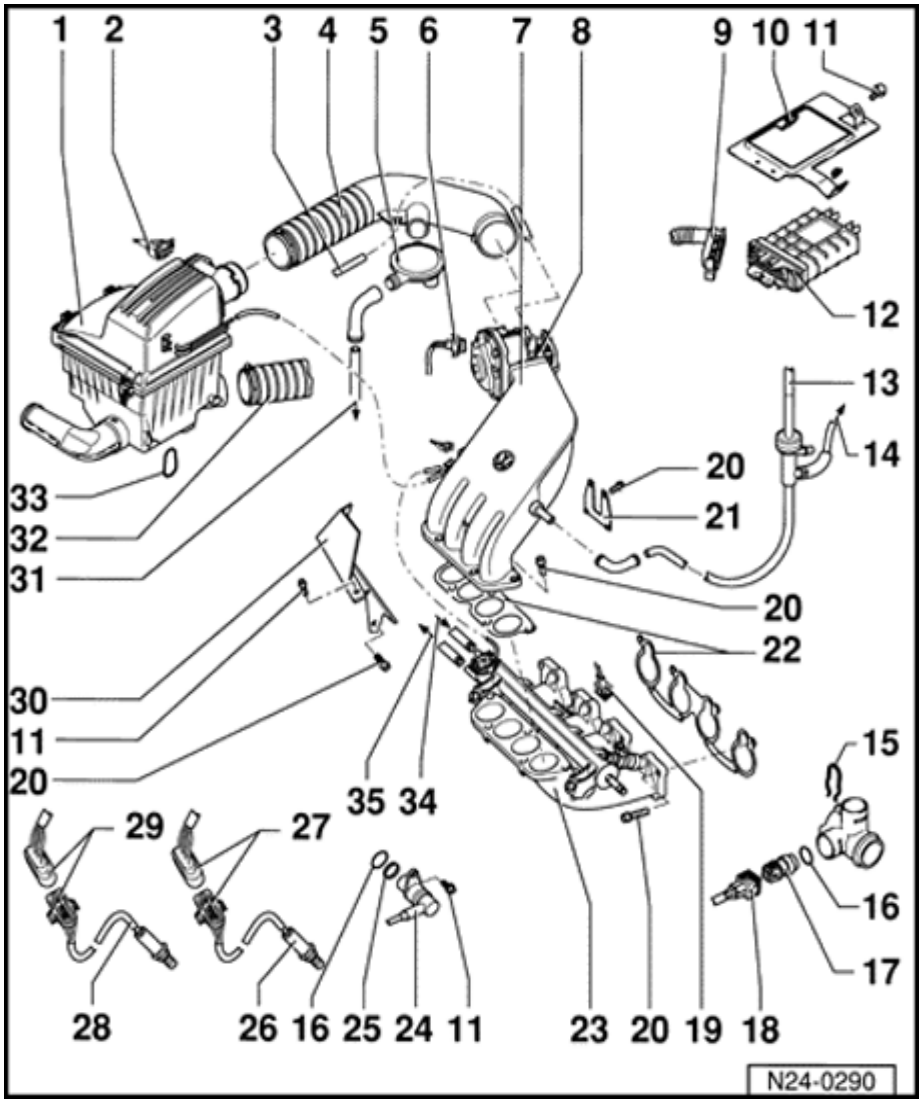

22 - Gasket

- Always replace

23 - Lower part of intake manifold

- Disassembling and assembling ⇒ Page 24-17

24 - Engine speed (RPM) sensor - G28-*

- Checking ⇒ Page 24-61

25 - Spacer ring

24-12

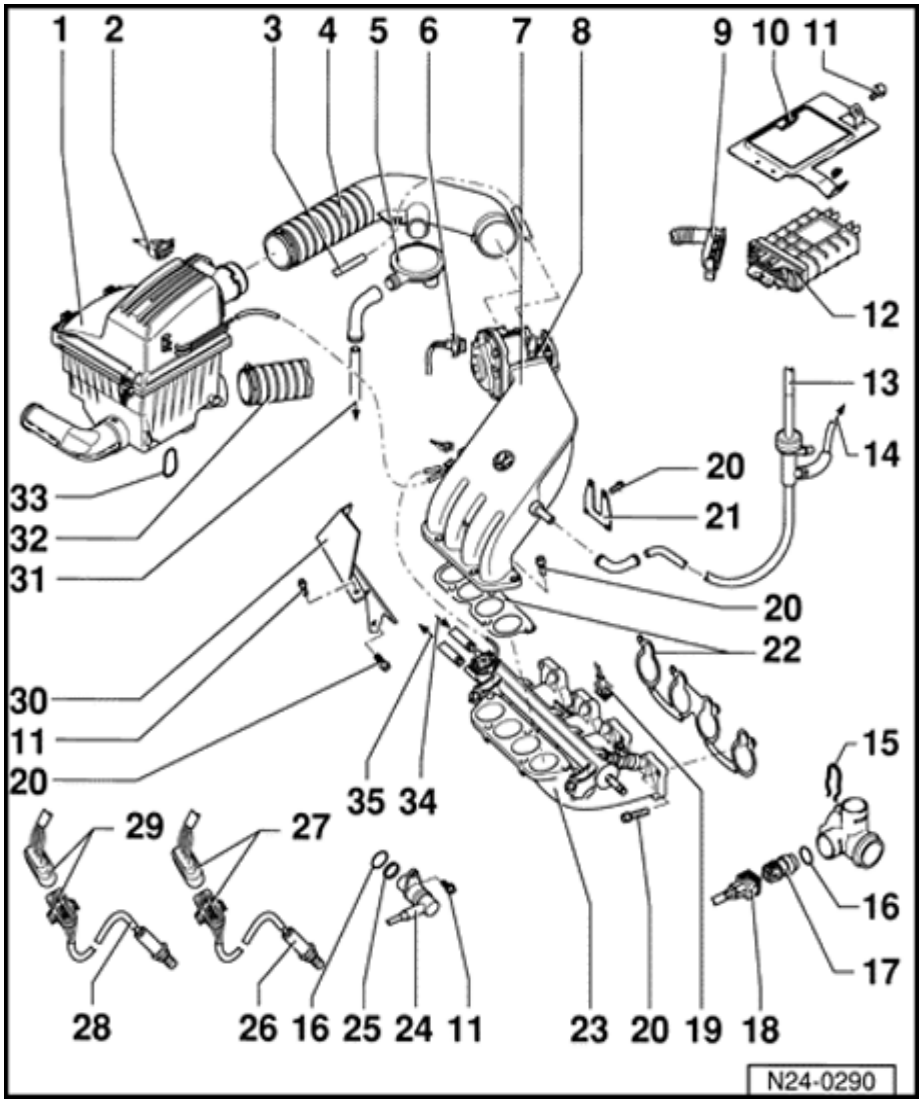

26 - Oxygen Sensor (O2S) Behind Three Way Catalytic Converter (TWC) - G130- bank 1*, 50 Nm

- Component location: In rear catalytic converter
- Only grease threads with G 052 112 A3 locking compound, do NOT allow locking compound to get into slots on sensor body
- Voltage supply of oxygen sensor heater via Fuel Pump (FP) Relay - J17-
- Check oxygen sensor

heater for Oxygen Sensor (O2S) behind Three Way Catalytic Converter (TWC) ⇒ Page 24-28

- Check Oxygen Sensor (O2S) and oxygen sensor control behind Three Way Catalytic Converter (TWC) ⇒ Page 24-92

27 - 4-pin harness connector

- Brown
- For Heated Oxygen Sensor (HO2S) 2 -G108- and oxygen sensor heater
- Secured to rear engine mounts

24-13

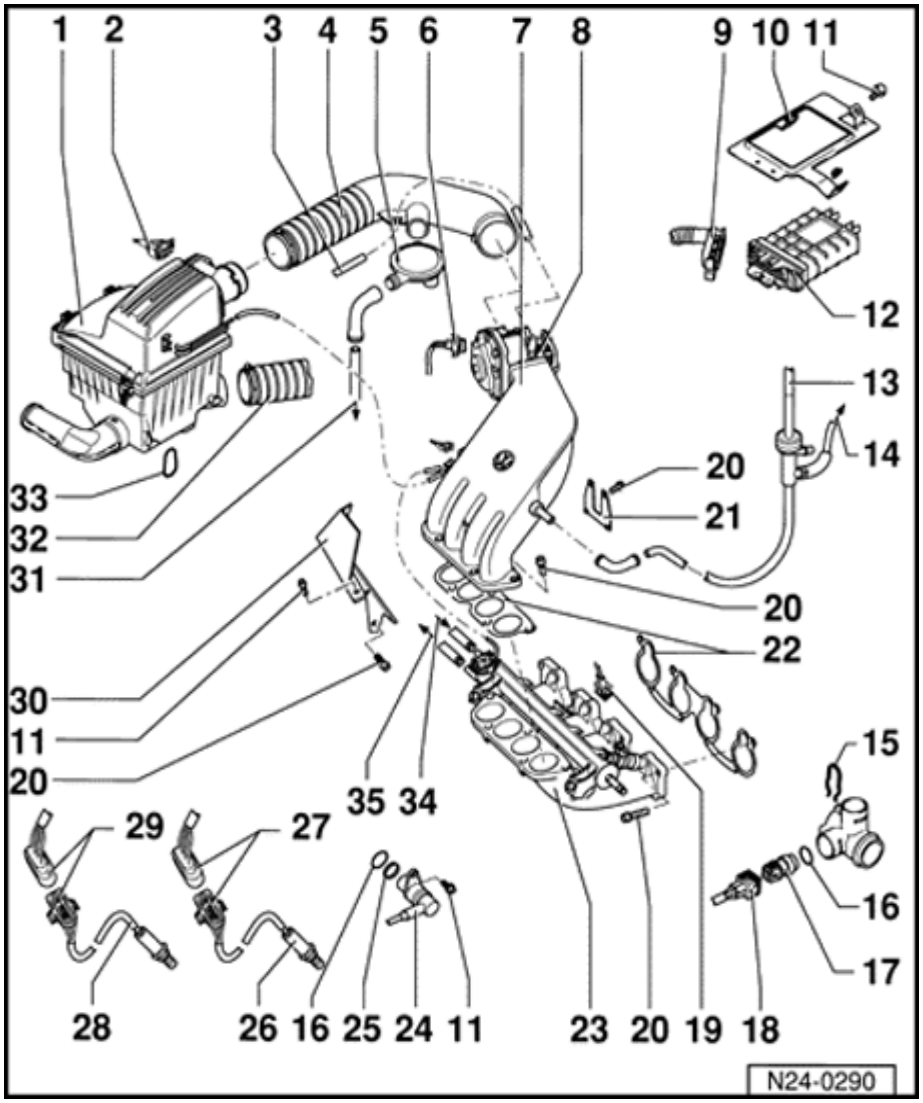

28 - Heated Oxygen Sensor (HO2S) 1 - G39-*, 50 Nm

- Component location: in front exhaust pipe
- Only grease threads with G 052 112 A3 locking compound, do NOT allow locking compound to get into slots on sensor body
- Voltage supply of oxygen sensor heater via Fuel Pump (FP) Relay - J17-
- Check oxygen sensor heater for Oxygen Sensor (O2S) before

Three Way Catalytic Converter (TWC) ⇒ Page 24-25

- Check Oxygen Sensor (O2S) and oxygen sensor control before Three Way Catalytic Converter (TWC) ⇒ Page 24-87

29 - 4-pin harness connector

- Black
- For Heated Oxygen Sensor (HO2S) - G39- and oxygen sensor heater
- Secured to rear engine mounts

24-14

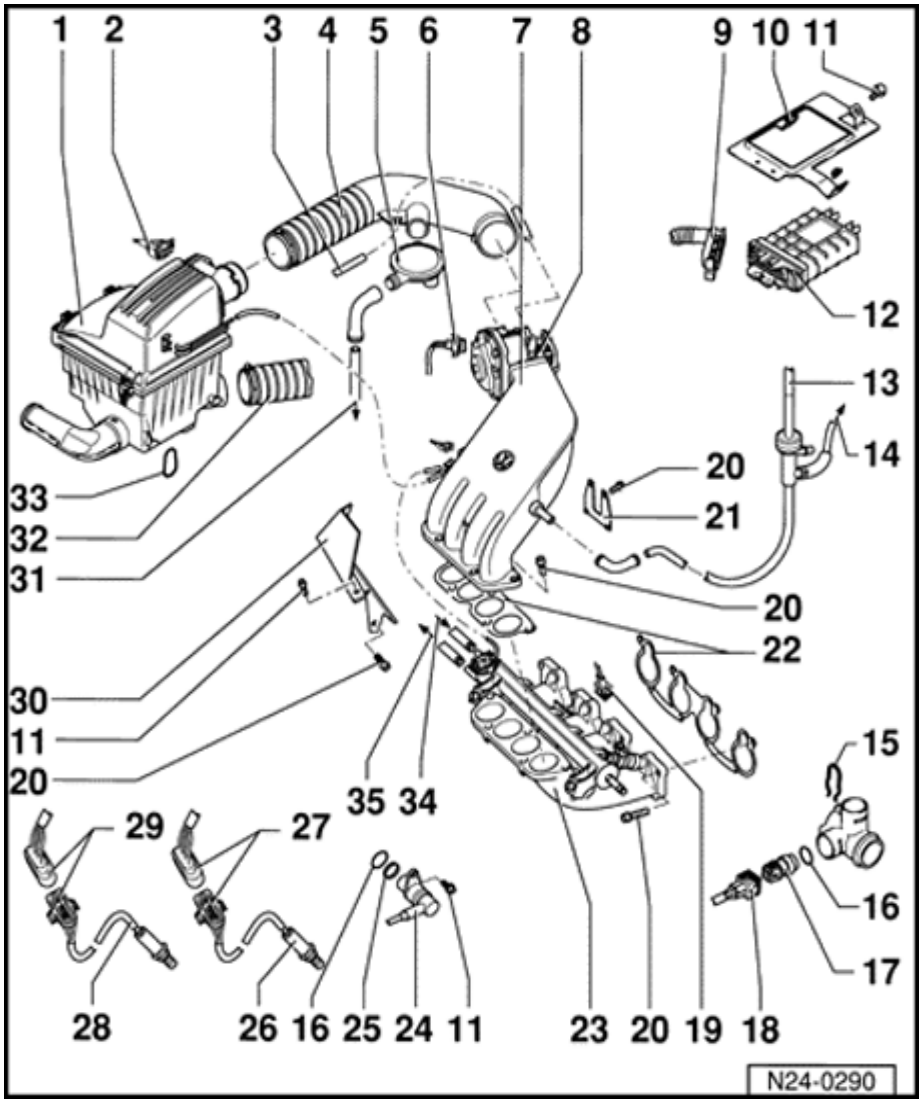

30 - Deflector

31 - To crankcase

32 - Hose

- To warm air collector plate at exhaust manifold

33 - Retaining ring

34 - Supply hose

- White arrow
- Secure with spring clamps
- From fuel filter ⇒ Page 20-6 , item 23

35 - Return hose

- Blue arrow
- Secure with spring clamps
- To check-valve on Fuel Pump (FP) unit

⇒ Page 20-4 ,
item 11

24-15

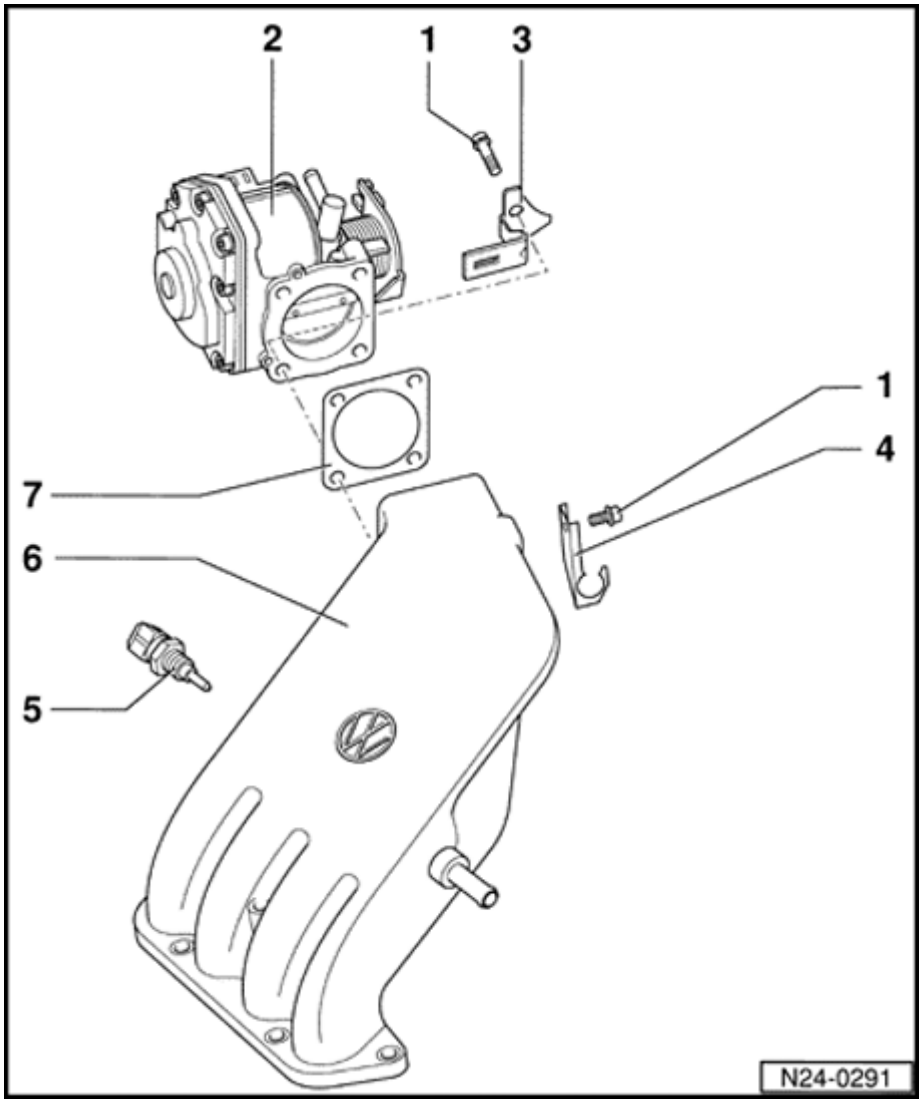

Intake manifold, upper part, disassembling and assembling

1 - M6 = 10 Nm, M8 = 20 Nm

2 - Throttle valve control module - J338-*

- 8-pin connector

- Components of throttle valve control module - J338- :Throttle Position (TP) Actuator - V60-, Throttle Position (TP) Sensor -G88-, Throttle Position (TP) Sensor -G69- and Closed Throttle Position (CTP) Switch -F60-

  - Checking ⇒ Page 24-36

- Adjusting accelerator pedal cable ⇒ Page 20-37

3 - Bracket

4 - Mounting bracket

- For accelerator pedal cable

24-16

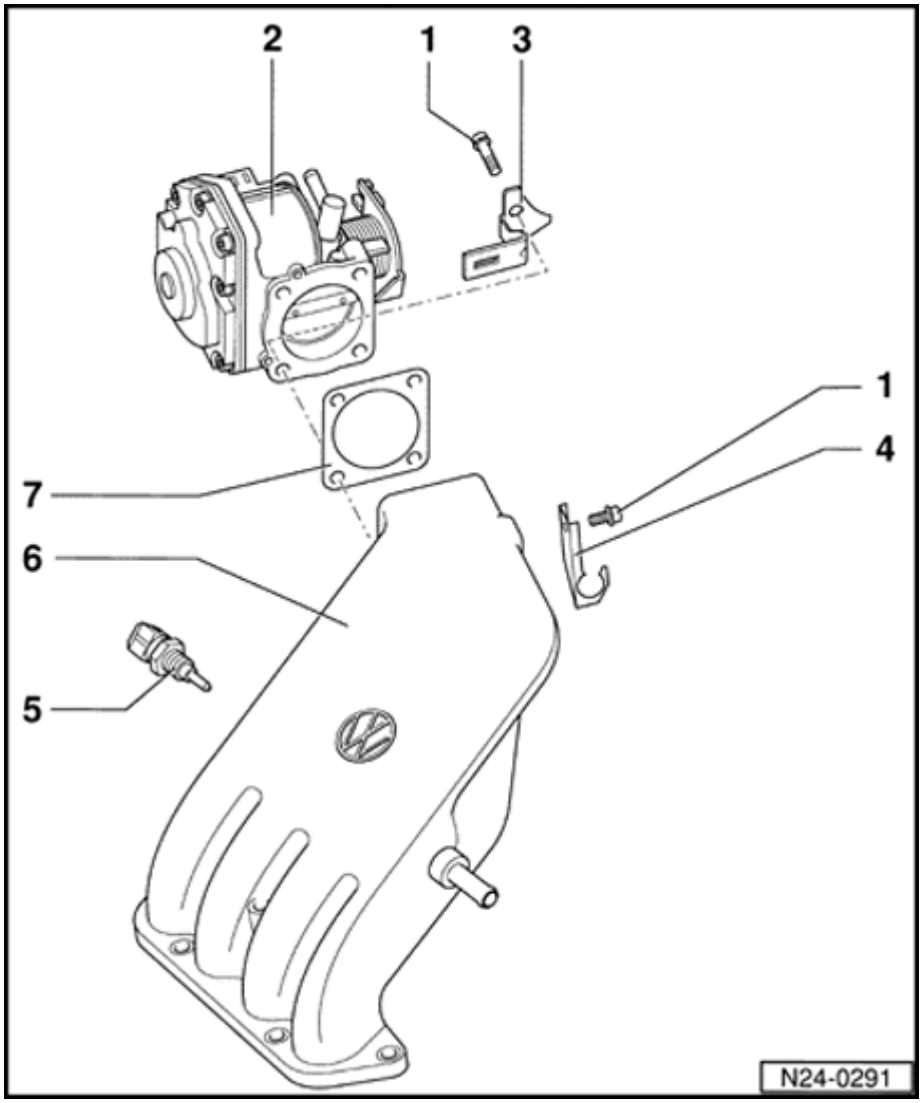

5 - Intake Air Temperature (IAT) Sensor -G72-*, 10 Nm

- 2-pin connector
- Checking ⇒ Page 24-53

6 - Upper part of intake manifold

7 - Gasket

- Always replace

24-17

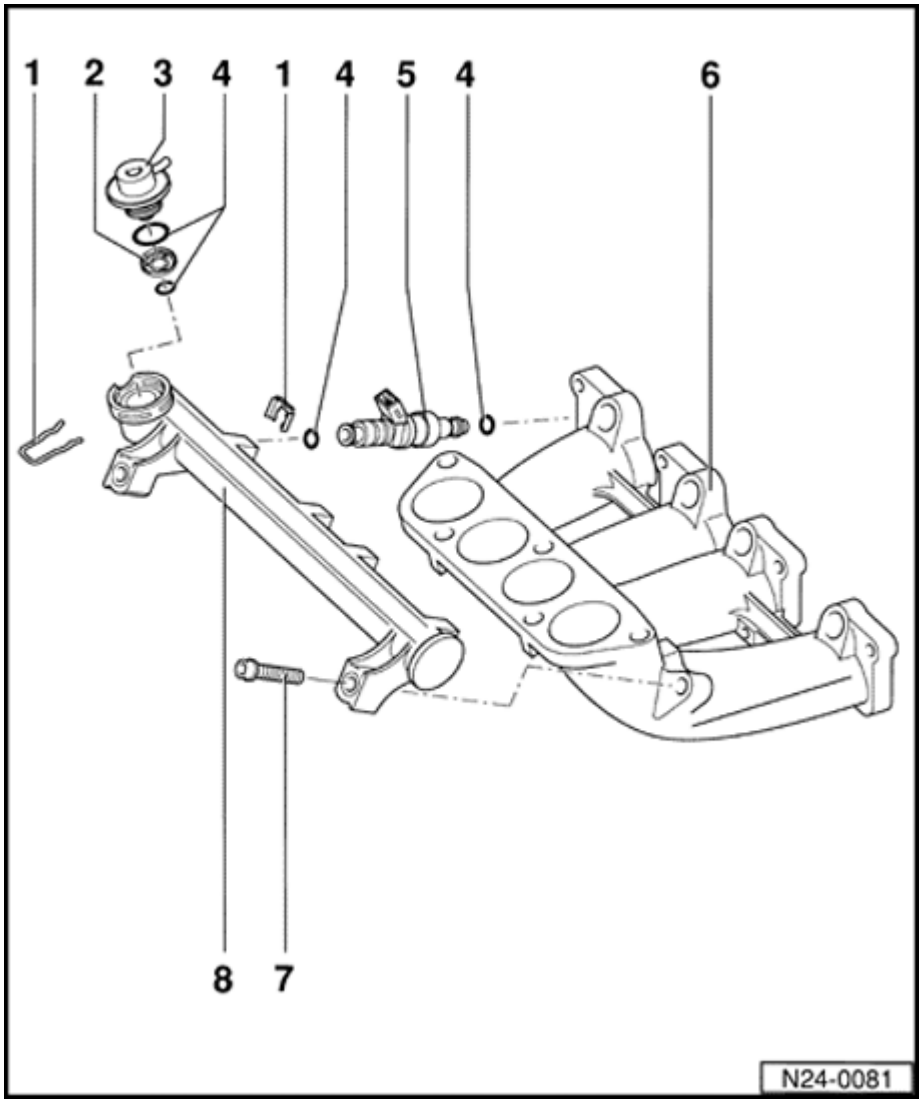

Intake manifold, lower part, disassembling and assembling

1 - Retaining clip

- Check for secure fitting

2 - Sieve

- Clean if soiled

3 - Fuel pressure regulator

- 3 bar
- Checking ⇒ Page 24-78 , checking fuel pressure regulator and residual pressure

4 - O-ring

- Always replace
- Lightly lubricate O-rings with clean engine oil before

installing

5 - Fuel injectors (-N30- through -N33-)*

- Checking ⇒ Page 24-65

6 - Lower part of intake manifold

24-18

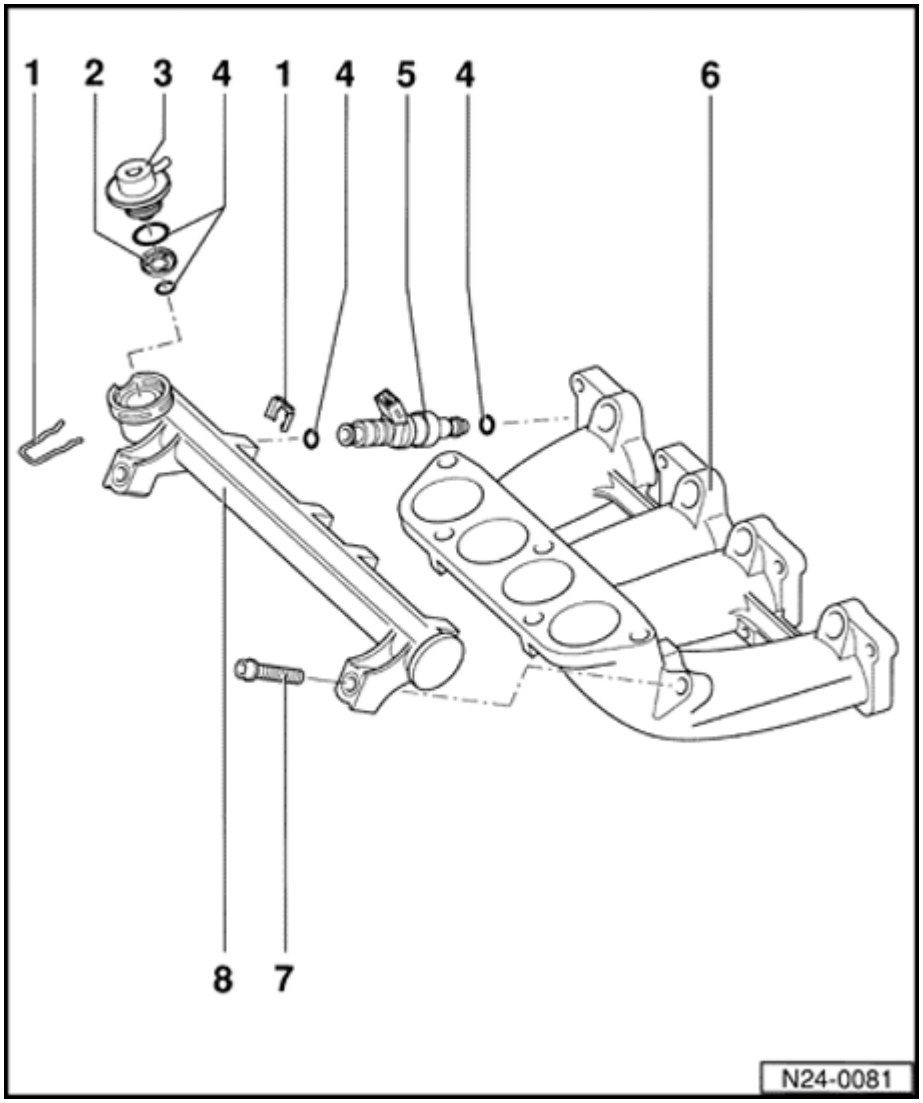

7 - 10 Nm

8 - Fuel rail

24-19

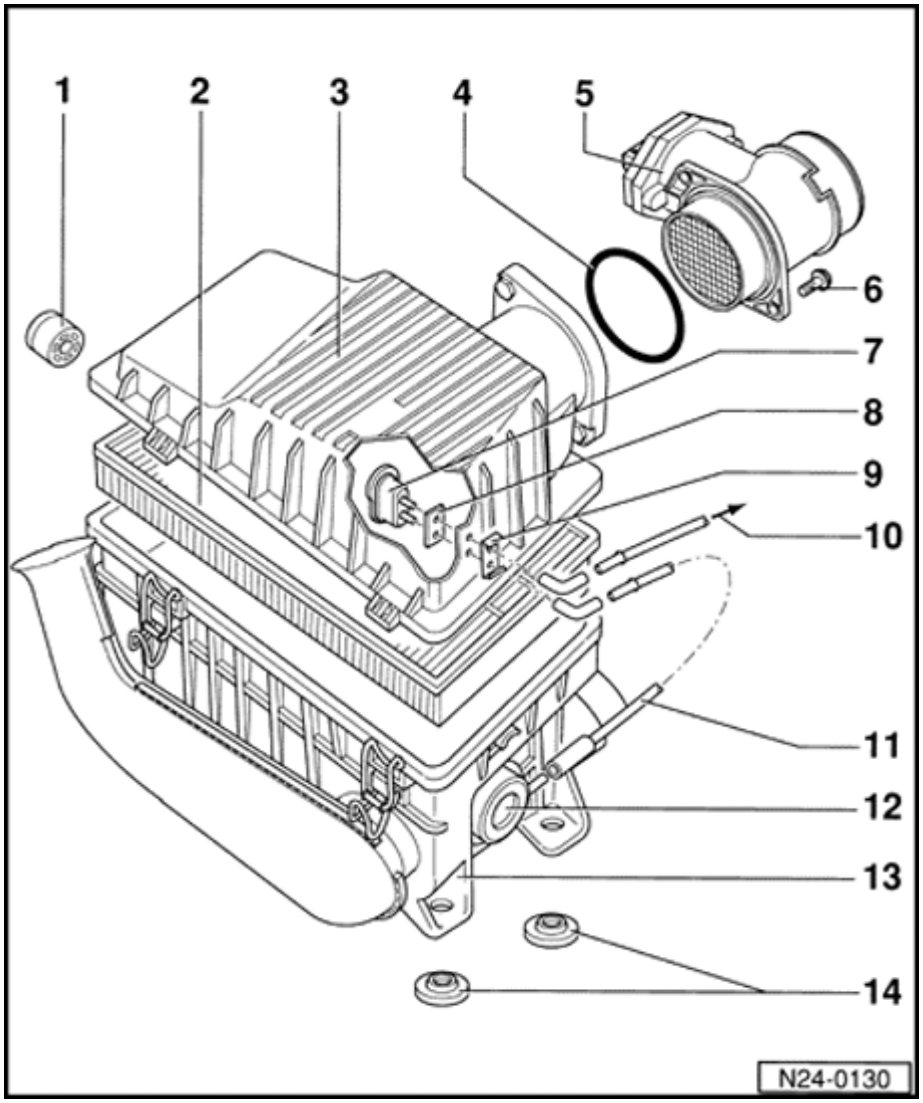

Air filter, disassembling and assembling

1 - Rubber grommet

2 - Filter element

3 - Upper section of air filter

4 - O-ring

- Replace if damaged

5 - Mass Air Flow (MAF) Sensor - G70-*

- 4-pin connector
- Checking ⇒ Page 24-31

6 - 10 Nm

7 - Temperature regulator

- For intake air pre-heating
- Metal connector pipe or with notch toward

regulator flap

- Checking intake air pre-heating ⇒ Page 24-97

24-20

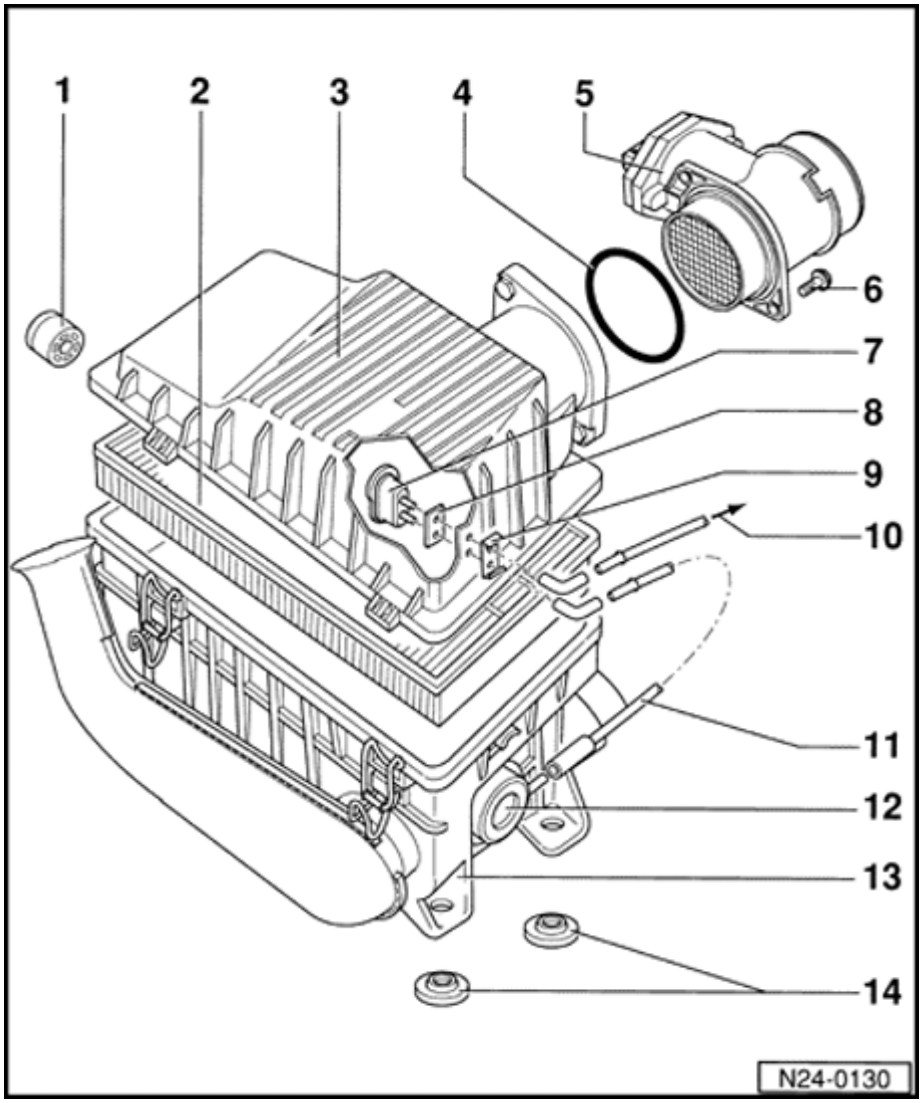

8 - Gasket

- Replace if damaged

9 - Locking plate

10 - To intake manifold

11 - Vacuum line

- Check for secure seating

12 - Vacuum diaphragm

13 - Lower section of air filter

14 - Base plate

24-21

Safety precautions

WARNING!

Observe the following for all installations, especially in engine compartment due to lack of room:

- ***Route lines of all types (e.g. for fuel, hydraulic, EVAP canister system, coolant and refrigerant, brake fluid, vacuum) and electrical wiring so that the original path is followed.***
- ***Watch for sufficient clearance to all moving or hot components.***
- ***Fuel system is under pressure! Before opening system, place rags around the connection point. Then release pressure by carefully loosening connection.***

If special testing equipment is required during road test, note the following:

- Test equipment must always be secured to the rear seat and operated from there by a second person.

24-22

If test and measuring equipment is operated from the passenger seat, the person seated there could be injured in the event of an acci involving deployment of the passenger-side airbag.

To reduce the risk of personal injury and/or damage to the fuel injection and ignition systen always observe the following:

- Do not touch or disconnect ignition wires wł engine is running or turning at starting RPM
- Only disconnect and reconnect wires for injection and ignition system, including test leads, when ignition is switched off.
- If engine is to be cranked at starting RPM without starting:

- Disconnect 3-pin connector from ignition coil Page 28-4 , item 8 .

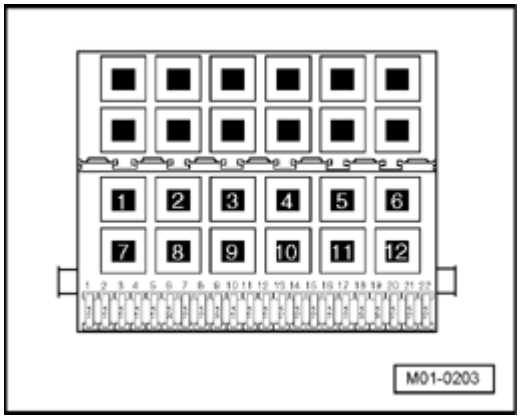

- Remove fuse 18 from fuse holder.

Note:

By removing fuse 18, voltage supply to the fuel injectors is interrupted.

Rules of cleanliness

When working on the fuel supply or fuel injection systems, the following "5 rules of cleanliness" should be carefully observed:

- Thoroughly clean all connections and the surrounding area before disconnecting.
- Place parts that have been removed on a clean surface and cover them. Use lint-free cloths only!
- Carefully cover over opened components or seal, if repairs are not performed immediately.
- Only install clean components: Only unpack replacement parts immediately prior to installation. Do not use parts that have been stored loose (in tool boxes etc.)
- When the system is open: Avoid working with compressed air. Do not move vehicle unless absolutely necessary.

Technical data

Engine Code		ABA
Idle speed[1)]		
	Vehicles with manual transmission	800 to 880 RPM
	Vehicles with automatic transmission	830 to 910 RPM
Engine Control Module (ECM)[2)]		
	System identification	Motronic M5.9
	Terminals at Engine Control Module (ECM)	68
	Replacement part number	See Parts Catalog
	Engine speed (RPM) limitation	starting at approx. 5800 RPM

1) Not adjustable

2) Replacing Engine Control Module (ECM) ⇒ Page 24-105

24-25

Components of engine, checking

Oxygen sensor heater for oxygen sensor before Three Way Catalytic Converter (TWC), checking

Recommended special tools and equipment

- V.A.G1526 Multimeter or V.A.G1715 multimeter
- V.A.G1594 Connector test kit
- Wiring diagram

Test requirements

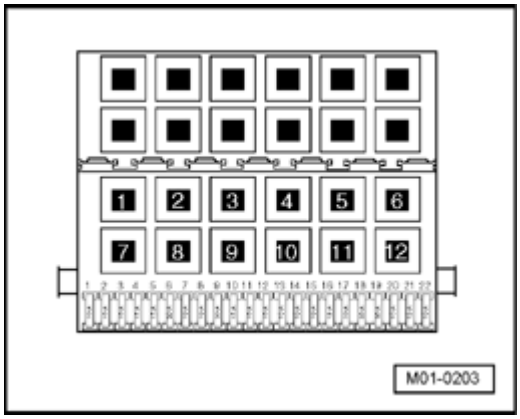

- The respective fuses of Heated Oxygen Sensor (HO2S) -G39- must be OK:

⇒ *Electrical Wiring Diagrams, Troubleshooting & Component Locations*

- Fuel Pump (FP) Relay -J17- must be OK, check:

⇒ *Electrical Wiring Diagrams, Troubleshooting & Component Locations*

- Ground (GND) connections between engine, transmission and chassis must be OK.
- Ignition switched off.

24-26

Test sequence

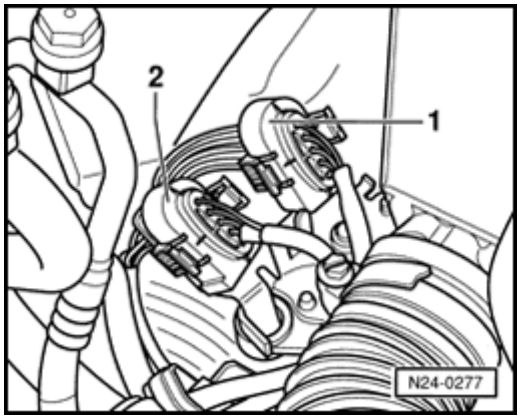

- Disconnect 4-pin harness connector (black) to Heated Oxygen Sensor (HO2S) -G39- (item no. 1).

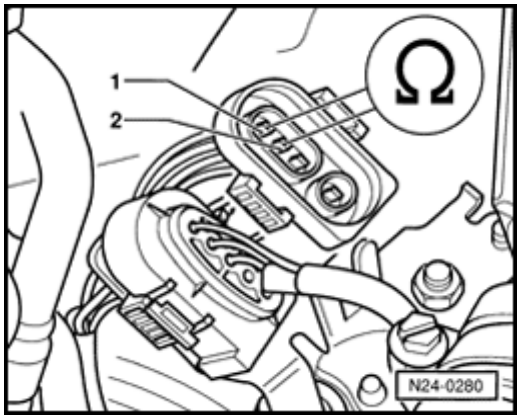

- Check resistance for sensor heater at connector to oxygen sensor terminal 1 + 2.

  Specified value: 1.0 to 24.2 Ω (at room temperature)

If specified value is not obtained:

- Replace Bank 1 Heated Oxygen Sensor (HO2S) -G39- ⇒ Page 26-4 , item 7 .
- Erase DTC memory of Engine Control Module (ECM) ⇒ Page ST-26 , Diagnostic mode 4: Reset/erase diagnostic data.
- Generate readiness code ⇒ Page ST-52 .

24-27

If specified value is obtained:

- Check Ground (GND) activation of oxygen sensor heater ⇒ Page 24-27 .

Checking Ground (GND) activation of oxyge sensor heating

- Connect test box to control module wiring harness ⇒ Page ST-11 , connect test box fo wiring test.

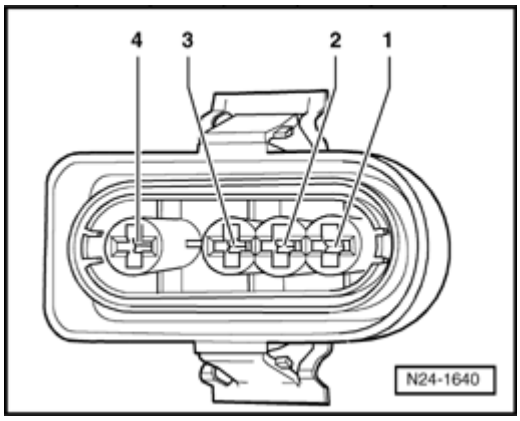

- Check wires between test box and 4-pin connector to Engine Control Module (ECM) f open circuit according to wiring diagram.

  Terminal 2 + socket 12

  Wire resistance: max. 1.5?

- Also check wires for short circuit to B+ or Ground (GND).

  Specified value: ∞ Ω

- Check wire between 4-pin connector termina and Fuel Pump (FP) Relay -J17- for open ci according to wiring diagram.

  Wire resistance: max. 1.5 Ω

If no malfunctions are found in wires:

- Replace Motronic Engine Control Module (E -J220- ⇒ Page 24-105 .

24-28

Oxygen sensor heater for oxygen sensorbehind Three Way Catalytic Converter (TWC), checking

Recommended special tools and equipment

- V.A.G1526 Multimeter or V.A.G1715 multimeter
- V.A.G1594 Connector test kit
- Wiring diagram

Test requirements

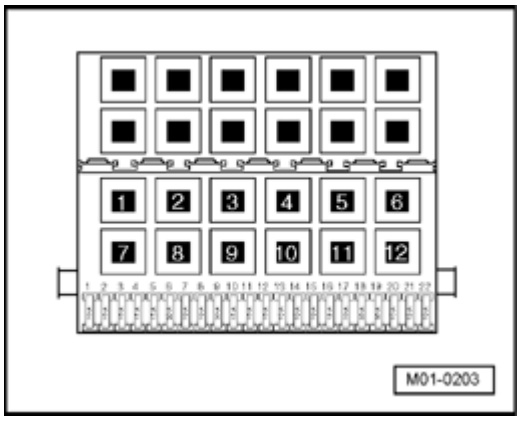

- The respective fuses of Heated Oxygen Sensor (HO2S) 2 -G108- must be OK:

⇒ *Electrical Wiring Diagrams, Troubleshooting & Component Locations*

- Fuel Pump (FP) Relay -J17- must be OK, check:

⇒ *Electrical Wiring Diagrams, Troubleshooting & Component Locations*

- Ground (GND) connections between engine, transmission and chassis must be OK.
- Ignition switched off.

24-29

Test sequence

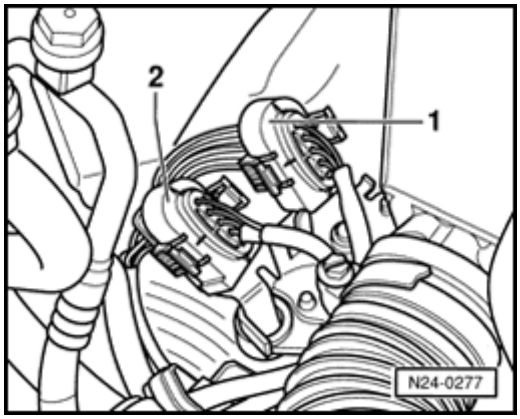

- Disconnect 4-pin harness connector (brown) to Heated Oxygen Sensor (HO2S) 2 -G108- (-2-).

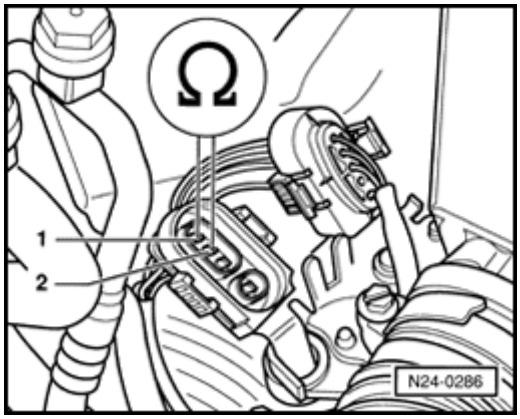

- Check resistance for sensor heater at connector to oxygen sensor terminal 1 + 2.

  Specified value: 1.0 to 24.2 Ω (at room temperature)

If specified value is not obtained:

- Replace Bank 1 Heated Oxygen Sensor (HO2S) 2 -G108- ⇒ Page 26-3 , item 4 .
- Erase DTC memory of Engine Control Module (ECM) ⇒ Page ST-26 , Diagnostic mode 4: Reset/erase diagnostic data.
- Generate readiness code ⇒ Page ST-52 .

If specified value is obtained:

- Check Ground (GND) activation of oxygen sensor heater ⇒ Page 24-30 .

Checking Ground (GND) activation of oxyge sensor heating

- Connect test box to control module wiring harness ⇒ Page ST-11 , connect test box fo wiring test.

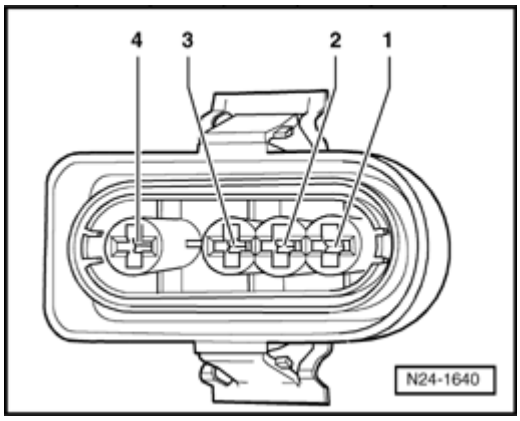

- Check wires between test box and 4-pin connector to Engine Control Module (ECM) f open circuit according to wiring diagram.

  Terminal 2 + socket 66

  Wire resistance: max. 1.5 Ω

- Also check wires for short circuit to B+ or Ground (GND).

  Specified value: ∞ Ω

- Check wire between 4-pin connector termina and Fuel Pump (FP) Relay -J17- for open ci according to wiring diagram.

  Wire resistance: max. 1.5 Ω

If no malfunctions are found in wires:

- Replace Motronic Engine Control Module (E -J220- ⇒ Page 24-105 .

24-31

Mass Air Flow (MAF) sensor, checking

Recommended special tools and equipment

- V.A.G1526 multimeter or V.A.G1715 multimeter
- V.A.G1594 connector test kit
- Wiring diagram

Test requirements

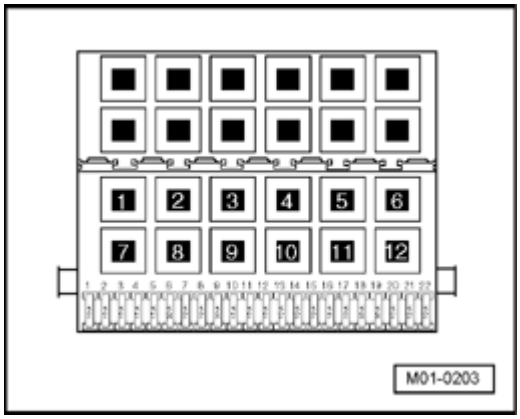

- The respective fuse of Mass Air Flow (MAF) Sensor -G70- must be OK:

⇒ *Electrical Wiring Diagrams, Troubleshooting & Component Locations*

- Fuel Pump (FP) Relay -J17- must be OK, check:

⇒ *Electrical Wiring Diagrams, Troubleshooting & Component Locations*

- Battery voltage must be at least 11.5 volts.
- All electrical consumers such as lights and rear window defroster must be switched off.

24-32

- Parking brake must be engaged or else daylight driving lights will be switched on.
- For vehicles with automatic transmission, selector lever must be in -P-.
- If vehicle is equipped with an A/C system, it must be switched off.
- Ground (GND) connections between engine, transmission and chassis must be OK.
- Coolant temperature must be at least 80 °C ⇒ Page ST-15 , Diagnostic mode 1: Check measured values; PID 5, Coolant temperature.

Function test

- Connect diagnostic tester ⇒ Page ST-8 .
- Start engine and let run at idle.
- Under address word 33, select "Diagnostic mode 1: Checking measured values."
- Select the measuring value "PID 16: Air flow quantity at Mass Air Flow (MAF) sensor".

- Check specified value of air flow quantity at Mass Air Flow (MAF) Sensor at idle:

PID	Diagnostic text	Specified value:
16:	Air flow quantity at Mass Air Flow (MAF) sensor • Engine running at idle	3.00 to 4.00 g/sec

- End diagnosis and switch ignition off.

If specified value is obtained, but DTC memory has a DTC concerning Mass Air Flow (MAF) sensor:

- Check voltage supply of Mass Air Flow (MAF) sensor ⇒ Page 24-34 .

If specified value is not obtained:

- Check signal and Ground (GND) wires of Mass Air Flow (MAF) sensor ⇒ Page 24-35 .

24-34

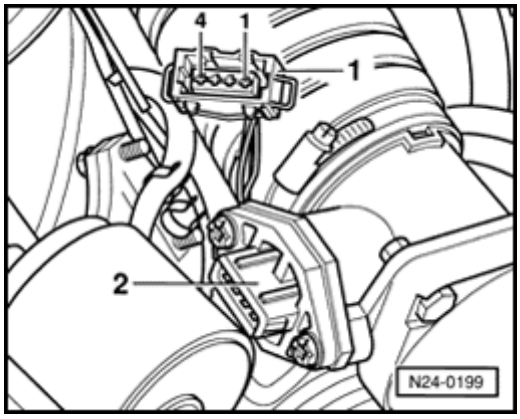

Voltage supply for Mass Air Flow (MAF) sensor, checking

- Disconnect 4-pin connector -1- from Mass Air Flow (MAF) Sensor -G70- (-2-).
- Connect multimeter to terminals 1 + 3 of connector for voltage measurement.
- Start engine, and let run at idle.

  Specified value: 11.0 to 15.0 V
- Switch ignition off.

If there is no voltage:

- Locate and repair open circuit using wiring diagram:

⇒ *Electrical Wiring Diagrams, Troubleshooting & Component Locations*

If voltage supply and wires are OK:

- Check signal and Ground (GND) wires of Mass Air Flow (MAF) sensor ⇒ Page 24-35 .

24-35

Checking signal and Ground wires of Mass Air Flow (MAF) Sensor

- Connect test box to control module wiring harness ⇒ Page ST-11 , connect test box fo wiring test.

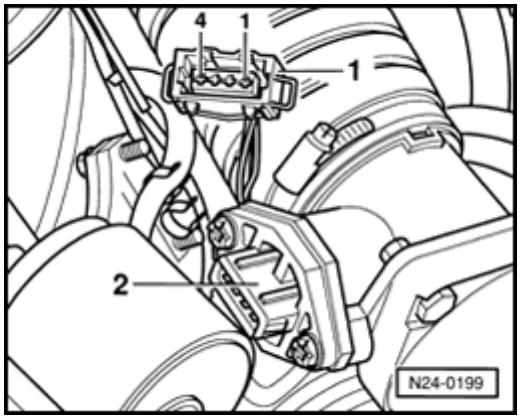

- Check wires between test box and 4-pin connector -1- to Engine Control Module (EC for open circuit according to wiring diagram.

  Terminal 2 + socket 16

  Terminal 4 + socket 17

  Wire resistance: max. 1.5 Ω

- Check wires for short circuit to each other, tc vehicle Ground (GND) and to B+.

  Specified value: ∞ Ω

If no DTCs are found in wires:

- Replace Mass Air Flow (MAF) Sensor -G70- Page 24-19 , item 5 .
- Erase DTC memory of Engine Control Modu (ECM) ⇒ Page ST-26 , Diagnostic mode 4: Reset/erase diagnostic data.
- Generate readiness code ⇒ Page ST-52 .

24-36

Throttle valve control module, checking

Recommended special tools and equipment

- V.A.G1526 Multimeter or V.A.G1715 multimeter
- V.A.G1594 Connector test kit
- Wiring diagram

Test requirements

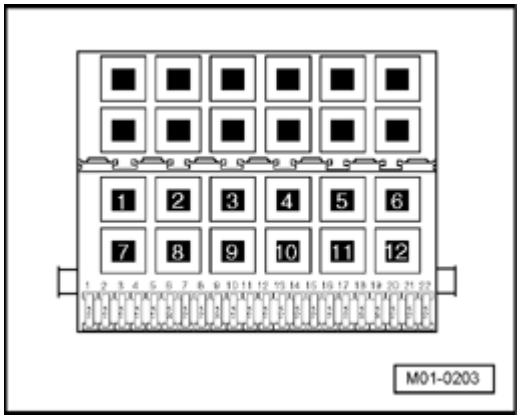

- The respective fuses of Motronic Engine Control Module (ECM) - J220- must be OK:

⇒ *Electrical Wiring Diagrams, Troubleshooting & Component Locations*

- Battery voltage must be at least 11.5 volts.
- All electrical consumers such as lights and rear window defroster must be switched off.
- If vehicle is equipped with an A/C system, it must be switched off.
- Parking brake must be engaged or else daylight driving lights will be switched on.

24-37

- Ground (GND) connections between engine, transmission and chassis must be OK.
- For vehicles with automatic transmission, selector lever must be in -P-.
- Throttle valve must not be damaged or dirty.
- Throttle valve must be in Closed Throttle Position (CTP).
- Adjustment of accelerator pedal cable must be OK ⇒ Page 20-37 , adjusting accelerator pedal cable.
- Coolant temperature must be at least 80 °C ⇒ Page ST-15 , Diagnostic mode 1: Check measured values; PID 5, Coolant temperature.

Function

Components of throttle valve control module -J338-:

- Closed Throttle Position (CTP) Switch -F60-
- Throttle Position (TP) sensor -G69-
- Throttle Position (TP) Sensor -G88-
- Throttle Position (TP) Actuator -V60-

24-38

If the complete throttle valve control module is current-less (e.g. connector disconnected) the throttle valve moves into a particular, specified mechanical position, which signals an increased idle speed with an engine at operating temperature.

If only the Throttle Position (TP) Actuator -V60- is current-less, the throttle valve also moves into the specified mechanical position (emergency running gap), however, since Closed Throttle Position (CTP) Switch -F60- can still be recognized, an "almost normal idle RPM" is reached via the respective ignition angle retardation.

If the Engine Control Module (ECM) detects a malfunction at Throttle Position (TP) Sensor -G69-, Throttle Position (TP) Actuator -V60- is switched current-less by the Engine Control Module (ECM) and the throttle valve moves into the specified mechanical position (emergency running gap) again.

Function test

- Connect diagnostic tester ⇒ Page ST-8 .
- Switch ignition on.
- Under address word 33, select "Diagnostic mode 1: Checking measured values."
- Select the measuring value "PID 17: Throttle valve position (absolute)."

- Check specified value of throttle valve position (absolute) at idle stop:

PID	Diagnostic text	Specified value:
17:	Throttle valve position (absolute) • Idle stop	0.0 to 7.0%

- Slowly depress accelerator pedal up to Wide Open Throttle (WOT) stop while observing the percentage display.

  The percentage display must increase uniformly.

- Check specified value of throttle valve position (absolute) at Wide Open Throttle (WOT) stop:

PID	Diagnostic text	Specified value:
17:	Throttle valve position (absolute) • Wide Open Throttle (WOT) stop	80.0 to 100.0%

- End diagnosis and switch ignition off.

If specified values are not obtained:

- Disconnect the 8-pin connector at the throttle valve control module.

- Check resistance of throttle valve control module ⇒ Page 24-40 .

24-40

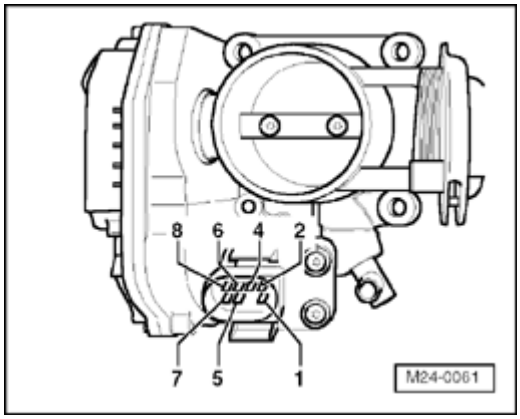

Checking resistance

- Measure resistance of Throttle Position (TP) Actuator -V60- between the terminals 1 + 2.

  Specified value: 3.0 to 200.0 Ω (at room temperature)

- Measure resistance of Closed Throttle Position (CTP) Switch -F60- between terminals 3 + engine Ground (GND) in idle position.

  Specified value: Max. 5.0 Ω (at room temperature)

- Slowly open throttle valve up to Wide Open Throttle (WOT)

  Specified value: ∞ Ω.

If specified values are not obtained:

- Replace Throttle Valve Control Module -J338- ⇒ Page 24-15 , item 2 .
- Erase DTC memory of Engine Control Module (ECM) ⇒ Page ST-26 , Diagnostic mode 4: Reset/erase diagnostic data.
- Generate readiness code ⇒ Page ST-52 .

If specified values are obtained:

- Check voltage supply of throttle valve contro module and wiring to control module ⇒ Pag 41 .

If voltage supply and wires are OK:

- Replace Motronic Engine Control Module (E -J220- ⇒ Page 24-105 .

Checking voltage supply and wiring to control module

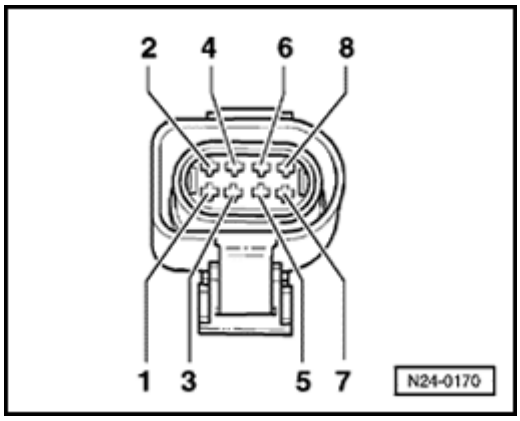

- Connect multimeter to terminals 3 + 7 of connector for voltage measurement.
- Switch ignition on.

  Specified value: at least 9.0 V
- Switch ignition off.
- Connect multimeter to terminals 4 + 7 of connector for voltage measurement.
- Switch ignition on.

  Specified value: at least 4.5 V
- Switch ignition off.

24-42

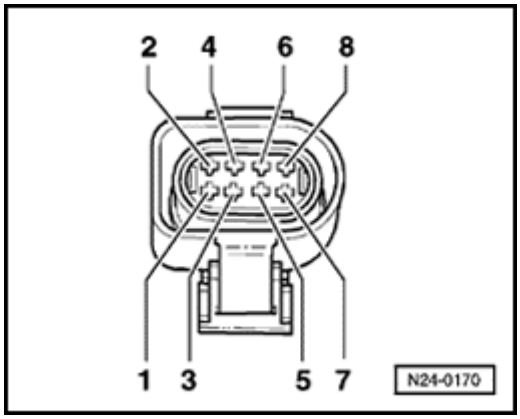

If specified values are not obtained:

- Connect test box to control module wiring harness ⇒ Page ST-11 , connect test box fo wiring test.

- Check wires between test box and 8-pin connector to Engine Control Module (ECM) f open circuit according to wiring diagram.

  Terminal 1 + socket 27

  Terminal 2 + socket 53

  Terminal 3 + socket 10

  Terminal 4 + socket 41

  Terminal 5 + socket 40

  Terminal 7 + socket 33

  Terminal 8 + socket 62

  Wire resistance: max. 1.5 Ω

24-43

- Check wires for short circuit to each other, to vehicle Ground (GND) and to B+.

  Specified value: ∞ Ω

If no malfunctions are found in wires:

- Check voltage supply of Engine Control Module (ECM) ⇒ Page 24-101 .

- Erase DTC memory of Engine Control Module (ECM) ⇒ Page ST-26 , Diagnostic mode 4: Reset/erase diagnostic data.

- Generate readiness code ⇒ Page ST-52 .

24-44

Engine Coolant Temperature (ECT) sensor, checking

Recommended special tools and equipment

- V.A.G1526 multimeter or V.A.G1715 multimeter
- V.A.G1594 connector test kit
- Wiring diagram

Test requirements

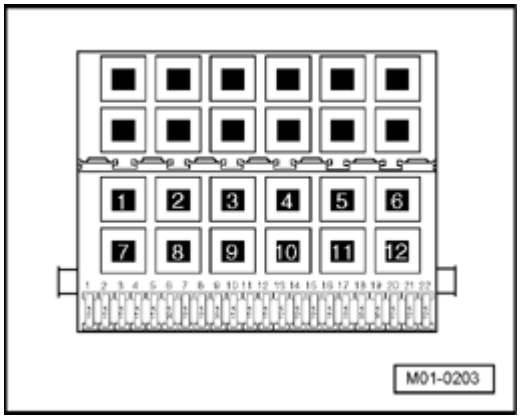

- The respective fuses of Motronic Engine Control Module (ECM) -J220- must be OK:

⇒ *Electrical Wiring Diagrams, Troubleshooting & Component Locations*

- Parking brake must be engaged or else daylight driving lights will be switched on.
- For vehicles with automatic transmission, selector lever must be in -P-.
- Engine must be cold.

24-45

Function test

- Connect diagnostic tester ⇒ Page ST-8 .
- Switch ignition on.
- Under address word 33, select "Diagnostic mode 1: Checking measured values."
- Select the measuring value "PID 05: Coolant temperature".
- Check specified value of coolant temperature:

PID	Diagnostic text	Specified value:
05:	Coolant temperature	approx. coolant temperature

If specified value is not obtained:

- Continue test according to the following table:

Indicated[1)]	Cause	Continue testing
approx. -46.5 °C	Open circuit or short circuit to B+	⇒ Page 24-47
approx. 141.0 °C	Short circuit to Ground (GND)	⇒ Page 24-49

[1)] If a temperature is indicated which differs greatly from ambient temperature of sensor, check sensor wires for contact resistance.

If specified value is obtained:

- Start engine and let run at idle. The temperature must climb uniformly

Note:

- *The temperature climbs in increments of 1.5 °C.*
- *If the engine shows problems in certain temperature ranges and if the temperature does not climb uniformly, the temperature signal is intermittent and the sensor should be replaced.*

24-47

Continuation of test if indication is approx. -46.5 ° C:

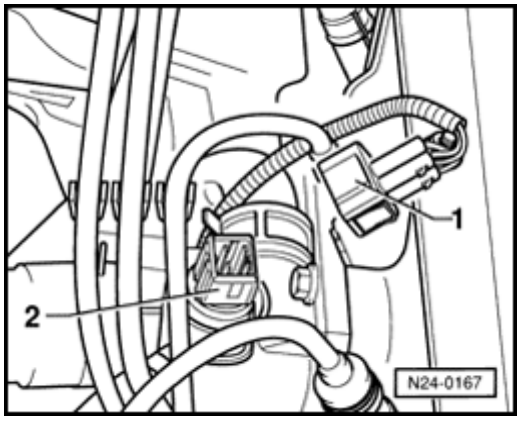

- Disconnect 4-pin connector -1- from Engine Coolant Temperature (ECT) Sensor -G62- with Engine Coolant Temperature (ECT) Sensor -G2- (-2-).

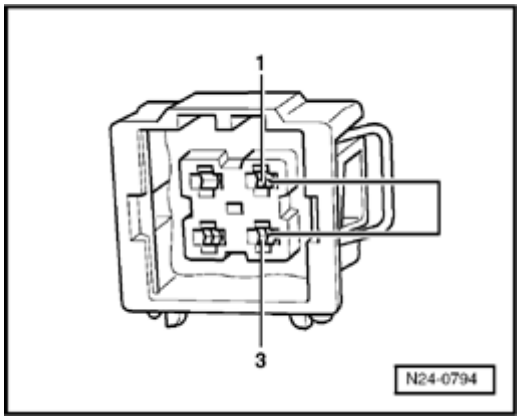

- Bridge terminals 1 + 3 of connector using the respective adapter cables and observe the indication on display.

24-48

If indication jumps to approx 141.0 °C:

- End diagnosis and switch ignition off.

- Replace Engine Coolant Temperature (ECT) Sensor -G62- with Engine Coolant Temperature (ECT) Sensor -G2- ⇒ Page 24-10 , item 17 .

WARNING!

- ***The cooling system is under pressure.***

- ***Danger of scalding when opening!***

- Erase DTC memory of Engine Control Module (ECM) ⇒ Page ST-26 , Diagnostic mode 4: Reset/erase diagnostic data.

- Generate readiness code ⇒ Page ST-52 .

If indication remains at approx. -46.5 °C:

- End diagnosis and switch ignition off.

- Check wires according to wiring diagram ⇒ Page 24-50 .

24-49

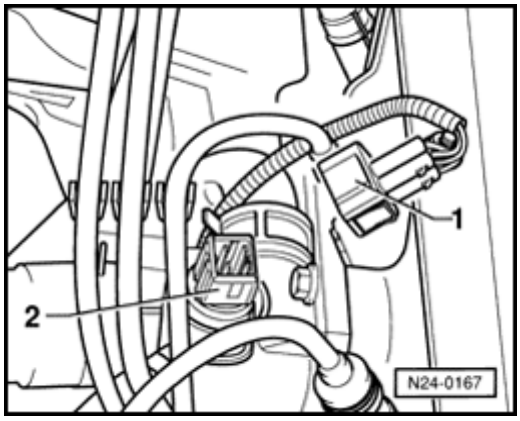

Continuation of test if indication is approx. 141.0 ° C:

- Disconnect 4-pin connector -1- from Engine Coolant Temperature (ECT) Sensor -G62- with Engine Coolant Temperature (ECT) Sensor -G2- (-2-).

If indication jumps to approx -46.5 ° C:

- End diagnosis and switch ignition off.
- Replace Engine Coolant Temperature (ECT) Sensor -G62- with Engine Coolant Temperature (ECT) Sensor -G2- ⇒ Page 24-10 , item 17 .

WARNING!

- ***The cooling system is under pressure.***
- ***Danger of scalding when opening!***

- Erase DTC memory of Engine Control Module (ECM) ⇒ Page ST-26 , Diagnostic mode 4: Reset/erase diagnostic data.
- Generate readiness code ⇒ Page ST-52 .

24-50

If indication remains at approx. 141.0 °C:

- End diagnosis and switch ignition off.

- Check wires according to wiring diagram ⇒ Page 24-50 .

Checking wiring

- Connect test box to control module wiring harness ⇒ Page ST-11 , connect test box fo wiring test.

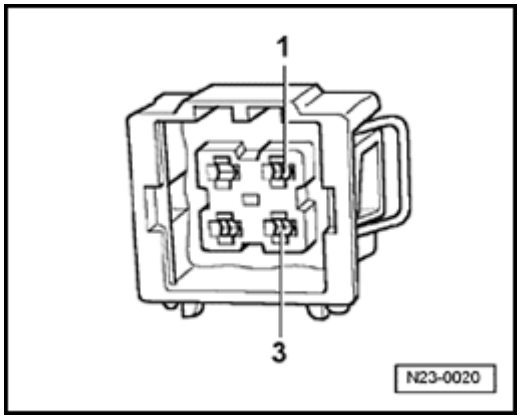

- Check wires between test box and 4-pin connector to Engine Control Module (ECM) f open circuit according to wiring diagram.

  Terminal 1 + socket14

  Terminal 3 + socket33

  Wire resistance: max. 1.5 Ω

- Also check wires for short circuit to each oth to vehicle Ground (GND) and to B+.

  Specified value: ∞ Ω

24-51

If no malfunctions are found in wires:

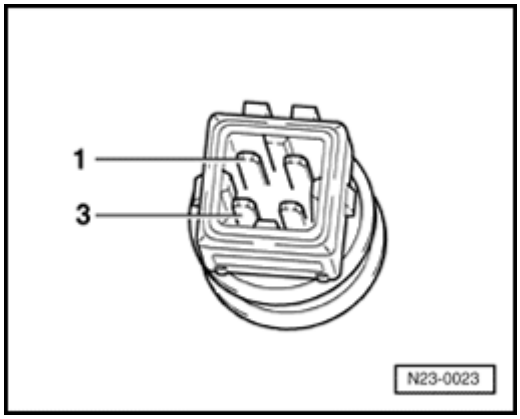

- Perform a resistance measurement at Engine Coolant Temperature (ECT) Sensor -G62- terminal 1 (Ground (GND)) and 3 (signal).

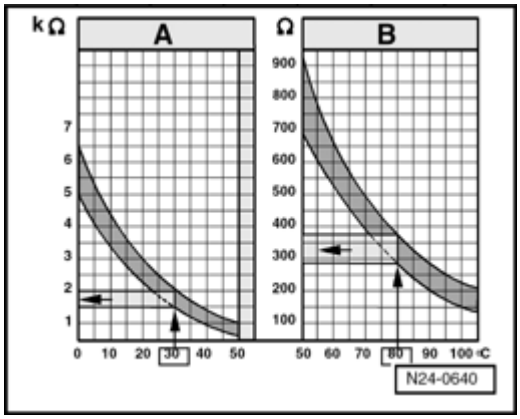

Range A displays resistance values for the temperature range of 0 to 50 °C, range B displays resistance values for the temperature range of 50 to 100 °C.

Read-out examples:

- 30 °C is in range A and corresponds to a resistance of 1.5 to 2.0 kΩ
- 80 °C is in range B and corresponds to a resistance of 275 to 375 Ω

24-52

If specified value is not obtained:

- Replace Engine Coolant Temperature (ECT) Sensor -G62- with Engine Coolant Temperature (ECT) Sensor -G2- ⇒ Page 24-10 , item 17 .

WARNING!

- ***The cooling system is under pressure.***
- ***Danger of scalding when opening!***

- Erase DTC memory of Engine Control Module (ECM) ⇒ Page ST-26 , Diagnostic mode 4: Reset/erase diagnostic data.

- Generate readiness code ⇒ Page ST-52 .

If no malfunctions are detected in the wires and the resistance values are OK:

- Replace Motronic Engine Control Module (ECM) -J220- ⇒ Page 24-105 .

24-53

Intake Air Temperature (IAT) Sensor, checking

Recommended special tools and equipment

- V.A.G1526 Multimeter or V.A.G1715 multimeter
- V.A.G1594 Connector test kit
- Wiring diagram
- Chilling spray (commercially available)

Test requirements

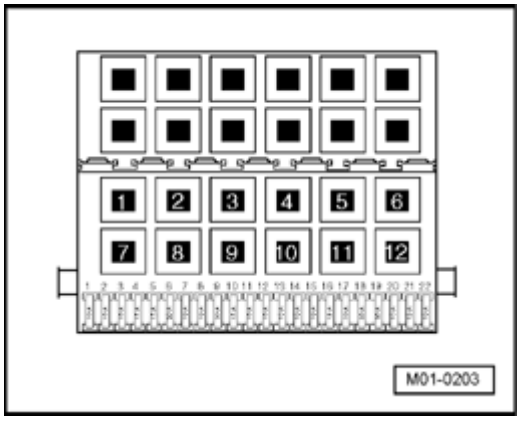

- The respective fuses of Motronic Engine Control Module (ECM) -J220- must be OK:

⇒ *Electrical Wiring Diagrams, Troubleshooting & Component Locations*

- Parking brake must be engaged or else daylight driving lights will be switched on.
- For vehicles with automatic transmission, selector lever must be in -P-.

Function test

- Connect diagnostic tester ⇒ Page ST-8 .
- Switch ignition on.

- Under address word 33, select "Diagnostic mode 1: Checking measured values."

- Select the measuring value "PID 15: Intake air temperature".

- Check specified value of intake air temperature:

PID	Diagnostic text	Specified value:
15:	Intake Air Temperature (intake manifold temperature)	approx. ambient temperature

If specified value is not obtained:

- Continue test according to the following table:

Indicated[1)]	Cause	Continue testing
approx. -46.5 °C	Open circuit or short circuit to B+	⇒ Page 24-56
approx. 141.0 °C	Short circuit to Ground (GND)	⇒ Page 24-57

[1)] If a temperature is indicated which is below the ambient temperature of sensor, first check sensor wires for contact resistance. Note that while the vehicle is standing still the sensor might warm up due to radiant heat.

24-55

If specified value is obtained:

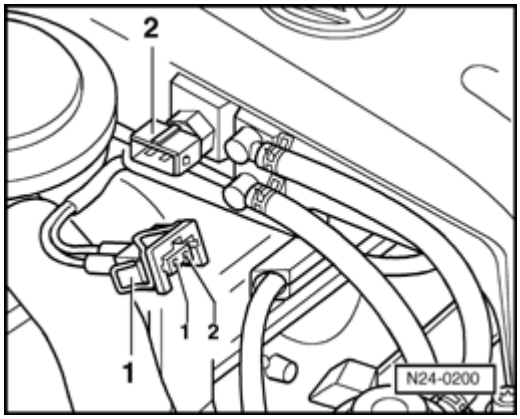

- Disconnect 2-pin connector -1- from Intake Air Temperature (IAT) Sensor -G72- (-2-).
- Remove Intake Air Temperature (IAT) Sensor -G72- and re-connect to connector.
- Seal threaded bore for sensor.
- Note value of intake manifold temperature.

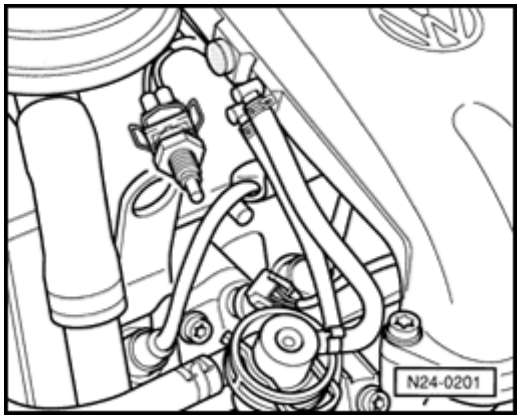

- Spray the sensor with commercially available chilling spray while observing the temperature value. The temperature must decrease.
- End diagnosis and switch ignition off.

If the intake manifold temperature does not drop:

- Replace Intake Air Temperature (IAT) Sensor -G72- ⇒ Page 24-16 , item 5 .
- Erase DTC memory of Engine Control Module (ECM) ⇒ Page ST-26 , Diagnostic mode 4: Reset/erase diagnostic data.
- Generate readiness code ⇒ Page ST-52 .

24-56

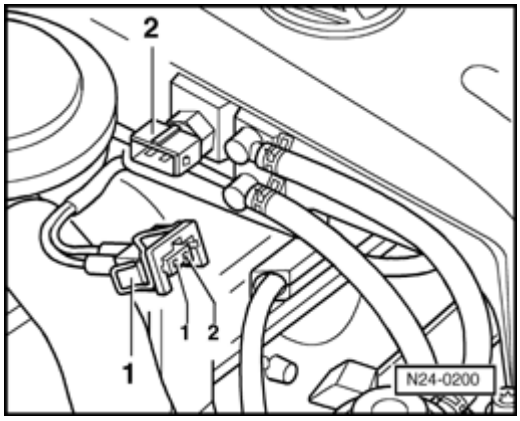

Continuation of test if indication is -46.5 °C:

- Disconnect 2-pin connector -1- from Intake Air Temperature (IAT) Sensor -G72- (-2-).
- Bridge terminals 1 + 2 of connector using the respective adapter cables while observing the indication on display.

If indication jumps to approx 141.0 °C:

- End diagnosis and switch ignition off.
- Replace Intake Air Temperature (IAT) Sensor -G72- ⇒ Page 24-16 , item 5 .
- Erase DTC memory of Engine Control Module (ECM) ⇒ Page ST-26 , Diagnostic mode 4: Reset/erase diagnostic data.

- Generate readiness code ⇒ Page ST-52 .

If indication remains at approx -46.5 °C:

- End diagnosis and switch ignition off.

- Check wires according to wiring diagram ⇒ Page 24-58 .

Continuation of test if indication is 141.0 ° C

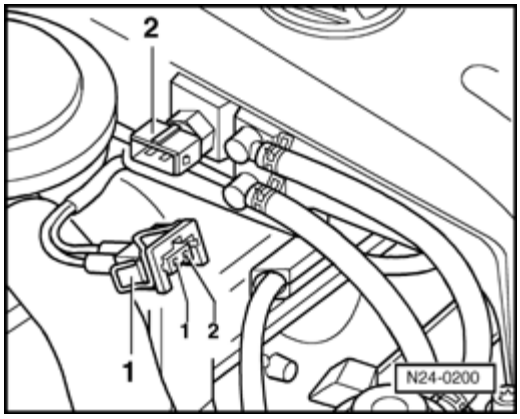

- Disconnect 2-pin connector -1- from Intake A Temperature (IAT) Sensor -G72- (-2-).

If indication jumps to approx. -46.5 °C:

- End diagnosis and switch ignition off.
- Replace Intake Air Temperature (IAT) Sensc G72- ⇒ Page 24-16 , item 5 .
- Erase DTC memory of Engine Control Modu (ECM) ⇒ Page ST-26 , Diagnostic mode 4: Reset/erase diagnostic data.
- Generate readiness code ⇒ Page ST-52 .

If indication remains at 141.0 °C:

- End diagnosis and switch ignition off.

- Check wires according to wiring diagram ⇒ Page 24-58 .

Checking wiring

- Connect test box to control module wiring harness ⇒ Page ST-11 , connect test box fo wiring test.

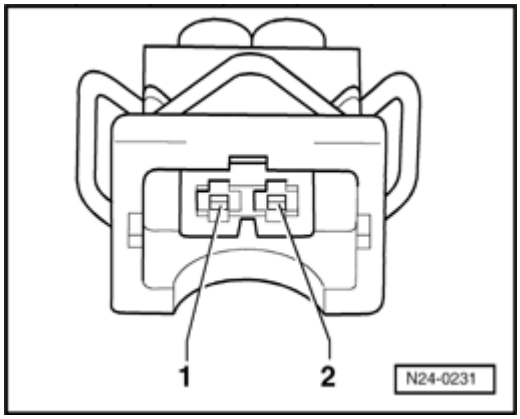

- Check wires between test box and 2-pin connector for open circuit according to wiring diagram.

  Terminal 1 + socket 36

  Terminal 2 + socket 33

- Wire resistance: max. 1.5 Ω

- Check wires for short circuit to each other, tc vehicle Ground (GND) and to B+.

  Specified value: ∞ Ω

24-59

If no malfunctions are found in wire:

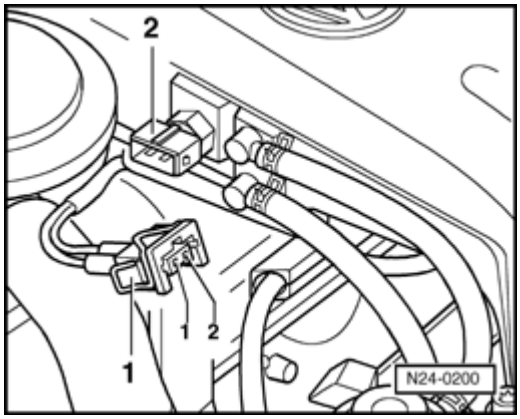

- Measure resistance at Intake Air Temperature (IAT) Sensor -G72- (-2-), terminals 1 (signal) and 2 (Ground (GND)).

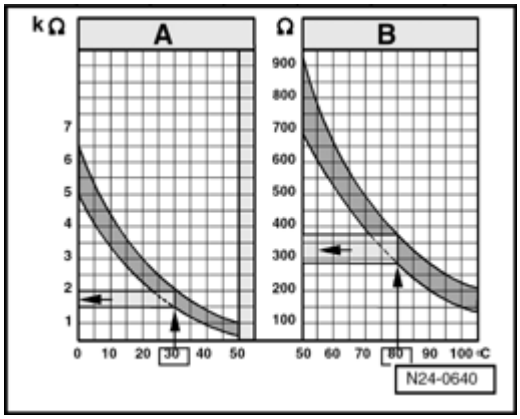

Range A displays resistance values for the temperature range of 0 to 0.50 °C, range B displays resistance values for the temperature range of 50 to 0.100 °C.

Read-out examples:

- 30 °C is in range A and corresponds to a resistance of 1.5 to 2.0 kΩ
- 80 °C is in range B and corresponds to a resistance of 275 to 375 Ω

24-60

If specified value is not obtained:

- Replace Intake Air Temperature (IAT) Sensor -G72- ⇒ Page 24-16 , item 5 .

- Erase DTC memory of Engine Control Module (ECM) ⇒ Page ST-26 , Diagnostic mode 4: Reset/erase diagnostic data.

- Generate readiness code ⇒ Page ST-52 .

If no malfunctions are detected in the wires and the resistance values are OK:

- Replace Motronic Engine Control Module (ECM) -J220- ⇒ Page 24-105 .

24-61

Engine speed (RPM) sensor, checking

Function

The Engine Speed (RPM) Sensor -G28- detects engine speed and reference marks. Without an engine speed signal, the engine will not start. If the engine speed signal fails while the engine is running, the engine will stop immediately.

Recommended special tools and equipment

- V.A.G1526 Multimeter or V.A.G1715 Multimeter
- V.A.G1594 Connector test kit
- Wiring diagram

Test sequence

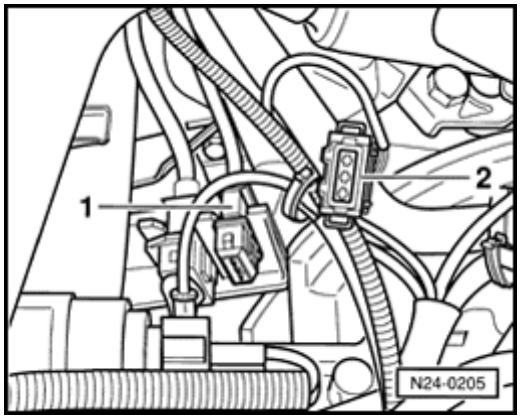

- Disconnect 3-pin harness connector -2- to engine speed (RPM) sensor -1-.

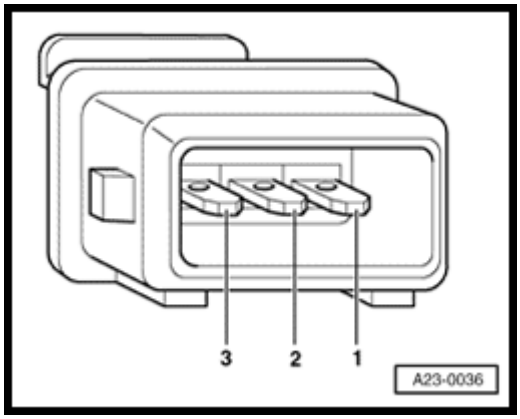

- Measure sensor resistance between terminals 2 + 3 at connector to sensor.

  Specified value: 480 to 1000 Ω

- Check sensor for short circuit between terminals 1 + 2 as well as 1 + 3.

  Specified value: ∞ Ω

24-63

If specified values are not obtained:

- Replace Engine Speed (RPM) Sensor -G28- Page 24-11 , item 24 .

- Erase DTC memory of Engine Control Modu (ECM) ⇒ Page ST-26 , Diagnostic mode 4: Reset/erase diagnostic data.

- Generate readiness code ⇒ Page ST-52 .

If no DTC is found on sensor:

- Connect test box to control module wiring harness ⇒ Page ST-11 , connect test box fo wiring test.

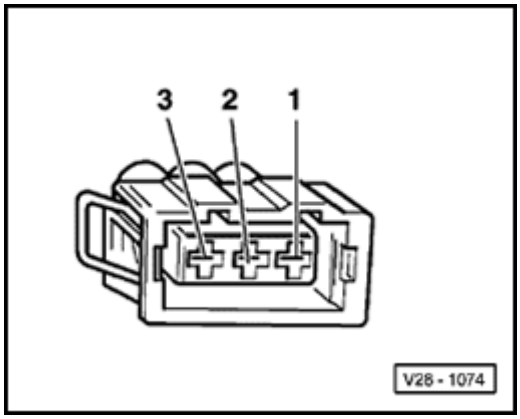

- Check wires between test box and 3-pin connector to Engine Control Module (ECM) f open circuit according to wiring diagram.

  Terminal 1 + socket 67

  Terminal 2 + socket 68

  Terminal 3 + socket 56

  Wire resistance: max. 1.5 Ω

- Check wires for short circuit to each other, tc vehicle Ground (GND) and to B+.

  Specified value: ∞ Ω

24-64

If no malfunctions are found in wires:

- Remove sensor and check sensor wheel for secure fit, damage, and run-out.

Note:

There is a larger-sized gap on the sensor wheel. This gap is the reference mark and does not mean that the sensor wheel is damaged.

If nothing seems to be wrong with the sensor wheel:

- Replace Motronic Engine Control Module (ECM) -J220- ⇒ Page 24-105 .

24-65

Fuel injectors, checking

Recommended special tools and equipment

- V.A.G1526 Multimeter or V.A.G1715 multimeter
- V.A.G1527 Voltage test lamp
- V.A.G1594 Connector test kit
- Wiring diagram

Test requirements

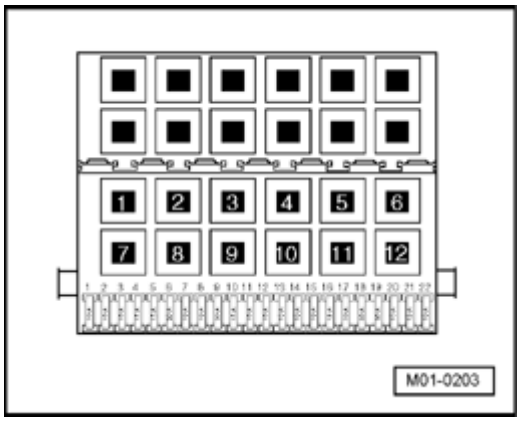

- The respective fuses of fuel injectors (-N30- to -N33-) must be OK:

⇒ *Electrical Wiring Diagrams, Troubleshooting & Component Locations*

- Fuel Pump (FP) Relay -J17- must be OK, check:

⇒ *Electrical Wiring Diagrams, Troubleshooting & Component Locations*

- Battery voltage must be at least 11.5 volts.
- All electrical consumers such as lights and rear window defroster must be switched off.

- Parking brake must be engaged or else daylight driving lights will be switched on.
- For vehicles with automatic transmission, selector lever must be in -P-.
- If vehicle is equipped with an A/C system, it must be switched off.
- Ground (GND) connections between engine, transmission and chassis must be OK.
- Engine speed (RPM) sensor must be OK, checking ⇒ Page 24-61 .
- Ignition switched off.

Test sequence

Observe safety precautions ⇒ Page 24-21 .

Observe rules for cleanliness ⇒ Page 24-23 .

- Remove intake manifold upper section ⇒ Page 24-8 , item 7 .
- Disconnect fuel injector connectors.

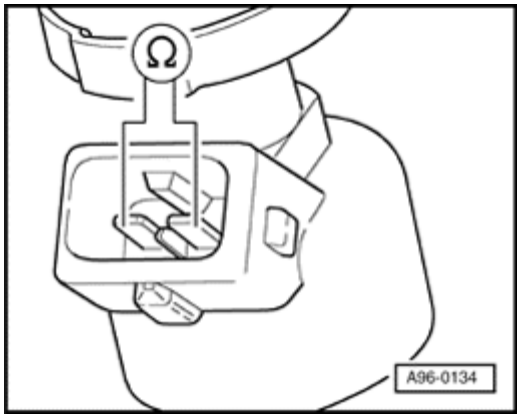

Resistance values of fuel injectors, checking

- Test resistance of fuel injectors between terminals.

  Specified value: 14.0 to 20.0 Ω

Note:

Resistance value is valid at approx. 20 ° C. At higher temperatures, resistance value increases.

If specified value is not obtained:

- Replace malfunctioning fuel injector ⇒ Page 24-17 , item 5 .

Note the following when installing the fuel injectors:

- Replace O-rings on all fuel injectors and wet them slightly with clean motor oil.
- Insert fuel injectors into fuel distributor perpendicular and in the right position, and secure them with retaining clips.
- Position fuel distributor on lower part of intake manifold using secured fuel injectors and apply uniform pressure to press it in.
- The connectors must audibly engage on valves when attached.

24-68

- Erase DTC memory of Engine Control Modu (ECM) ⇒ Page ST-26 , Diagnostic mode 4: Reset/erase diagnostic data.

- Generate readiness code ⇒ Page ST-52 .

Checking voltage supply

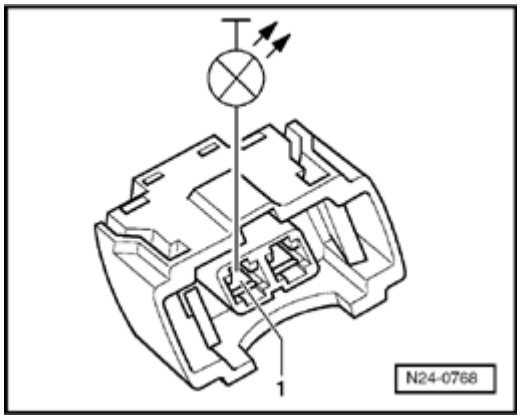

- Connect diode test lamp to connector of test fuel injector terminal 1 and Ground (GND).
- Operate starter and test voltage supply for fu injector.

  LED must light up.
- Switch ignition off.

If LED does not light up:

- Check wire between 2-pin connector termina and the Fuel Pump (FP) Relay -J17- for ope circuit according to wiring diagram.

  Wire resistance: max. 1.5 Ω

24-69

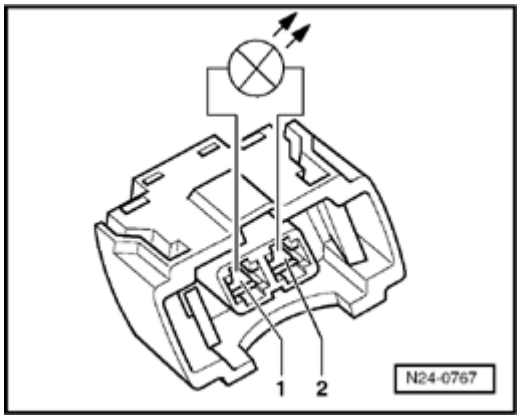

Checking activation

- Connect diode test lamp to the connector terminals of the fuel injector to be checked.
- Operate starter and test activation of fuel injector.

  LED should flicker.
- Switch ignition off.

If LED does not flicker:

- Connect test box to control module wiring harness ⇒ Page ST-11 , connect test box for wiring test.

24-70

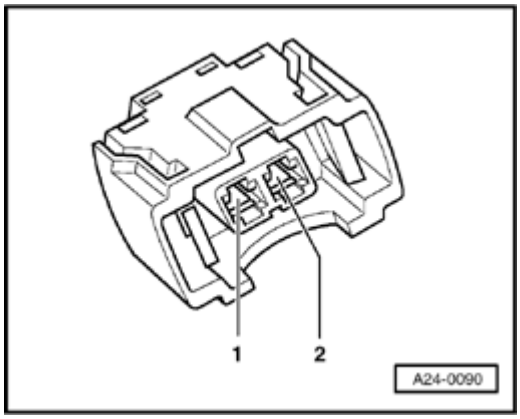

- Check wires between test box and 2-pin connector to Engine Control Module (ECM) for open circuit according to wiring diagram.

  Wire resistance: max. 1.5 Ω

Component	Connector	Test box
Cylinder 1 Fuel Injector -N30-	Terminal 2	Socket 24
Cylinder 2 Fuel Injector -N31-	Terminal 2	Socket 25
Cylinder 3 Fuel Injector -N32-	Terminal 2	Socket 26
Cylinder 4 Fuel Injector -N33-	Terminal 2	Socket 2

- Check wires for short circuit to B+ or Ground (GND).

  Specified value: ∞ Ω

If there is no malfunction in wire connection:

- Replace Motronic Engine Control Module (ECM) -J220- ⇒ Page 24-105 .

24-71

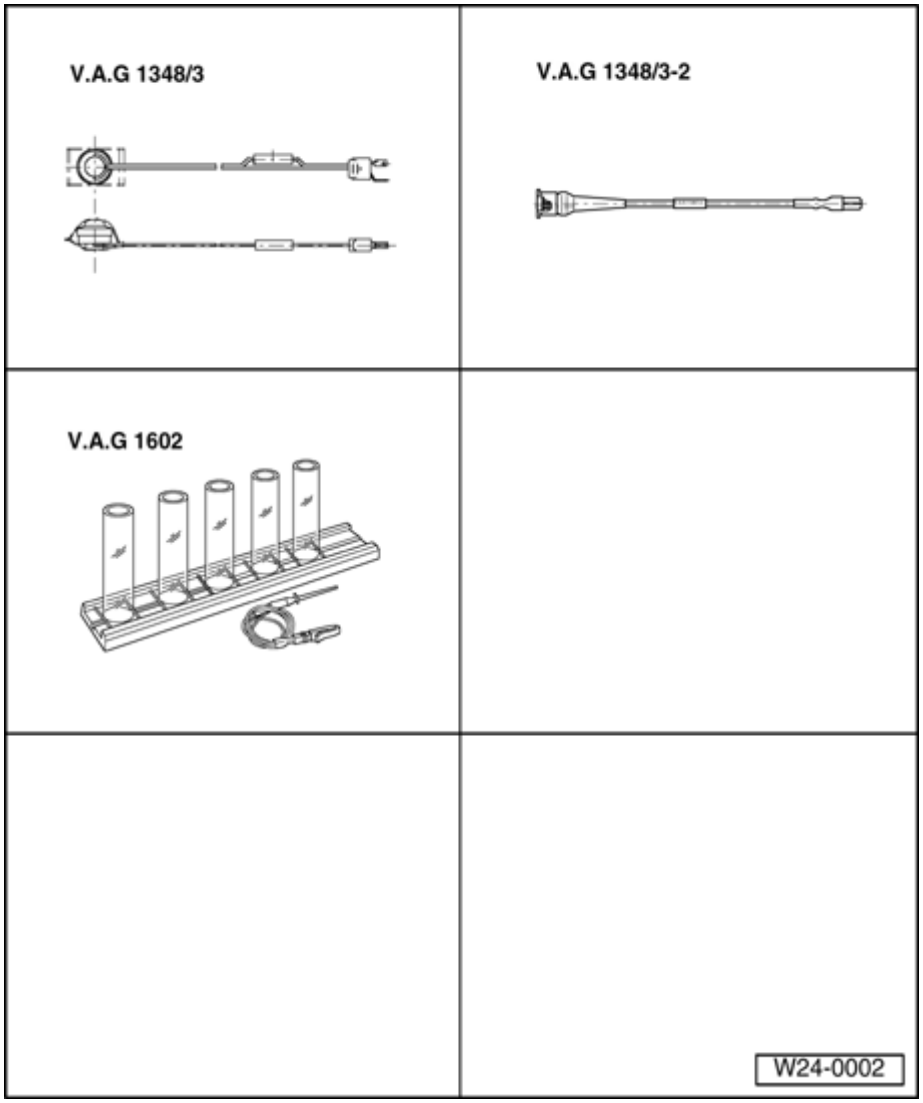

Injection quantity and proper seal of fuel injectors, checking

Recommended special tools and equipment

- V.A.G1348/3A remote control with V.A.G1348/3-2 adapter cable
- V.A.G 1602 tester for quantity of injected fuel

Not illustrated:

- V.A.G1594A connector test kit

Test requirement

- Fuel pressure must be OK, check ⇒ Page 24-77 , fuel pressure regulator and retaining pressure, checking.

Test sequence

WARNING!

Fuel system is under pressure! Before opening system, place rags around the connection point. Then release pressure by carefully loosening connection.

- Remove intake manifold upper section ⇒ Page 24-8 , item 7 .

Note:

Seal the intake channels in lower part of intake manifold using a clean rag.

- Disconnect fuel injector connectors.

- Remove fuel rail with fuel injectors and support ⇒ Page 24-17 , disassembling and assembling lower section of intake manifold.

24-73

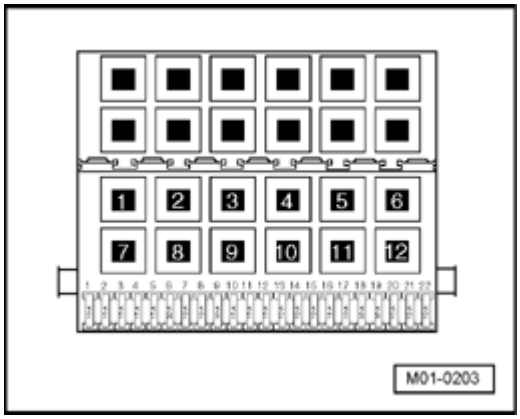

Checking Proper Seal

- Remove Fuel Pump (FP) Relay -J17- from relay carrier (relay position 12).

Note:

- *Remove battery Ground (GND) strap if tools are necessary for removal of relays or control modules from the relay carrier.*
- *Obtain radio code for radios with anti-theft coding before disconnecting battery.*
- *Do not use metallic tools to pry off relays from relay carrier. The terminals could conduct electricity.*

- Bridge terminals 4 + 6 on relay carrier using respective adapter cables.

  Fuel Pump (FP) must run.

- Check proper seal of fuel injectors (visual inspection). With Fuel Pump (FP) running, only 1 to 2 drops per minute should escape from each valve.
- Disconnect the connection between relay carrier terminals.
- Insert Fuel Pump (FP) Relay -J17- into relay carrier.

If fuel loss is greater:

- Replace malfunctioning fuel injector ⇒ Page 24-17 , item 5 .

Note the following when installing the fuel injectors:

- Replace O-rings on all fuel injectors and wet them slightly with clean motor oil.
- Insert fuel injectors into fuel distributor perpendicular and in the right position, and secure them with retaining clips.
- Position fuel distributor on lower part of intake manifold using secured fuel injectors and apply uniform pressure to press it in.
- The connectors must audibly engage on valves when attached.

- Erase DTC memory of Engine Control Module (ECM) ⇒ Page ST-26 , Diagnostic mode 4: Reset/erase diagnostic data.

- Generate readiness code ⇒ Page ST-52 .

24-75

Checking injection quantity

- Insert a fuel injector to be tested into a measuring tube of V.A.G1602 tester for fuel injection quantity.

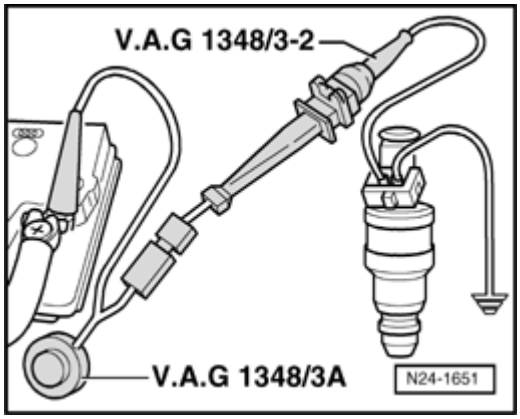

- Using respective adapter cables, connect on terminal of fuel injector to be checked to eng Ground (GND).
- Use adapter cable to connect second termin fuel injector to V.A.G1348/3 remote control v V.A.G1348/3-2 adapter cable.
- Connect alligator clip to B+.

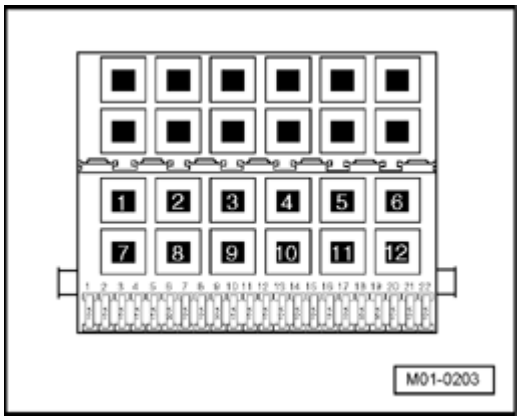

- Remove Fuel Pump (FP) Relay -J17- from re carrier (relay position 12).

Note:

- *Remove battery Ground (GND) strap if tools necessary for removal of relays or control modules from the relay carrier.*
- *Obtain radio code for radios with anti-theft coding before disconnecting battery.*
- *Do not use metallic tools to pry off relays fro relay carrier. The terminals could conduct electricity.*

- Bridge terminals 4 + 6 on relay carrier using respective adapter cables.

  Fuel Pump (FP) must run.

- Operate remote control for 30 seconds.

- Repeat test on other fuel injectors. Use new graduated measuring glasses for this.

Note:

Also check spray pattern when checking injection quantity. Spray pattern must be the same for all injectors

- After all fuel injectors have been activated, place graduated measuring glasses on a level surface and compare quantity of injected fuel. Specified value: 85 to 105 ml per injector

- Disconnect the connection between relay carrier terminals.

- Insert Fuel Pump (FP) Relay -J17- into relay carrier.

If the measured value of one or more fuel injectors is below or above the indicated specified value:

- Replace malfunctioning fuel injector ⇒ Page 24-17 , item 5 .

24-77

Note the following when installing the fuel injectors:

- Replace O-rings on all fuel injectors and wet them slightly with clean motor oil.
- Insert fuel injectors into fuel distributor perpendicular and in the right position, and secure them with retaining clips.
- Position fuel distributor on lower part of intake manifold using secured fuel injectors and apply uniform pressure to press it in.
- The connectors must audibly engage on valves when attached.

- Erase DTC memory of Engine Control Module (ECM) ⇒ Page ST-26 , Diagnostic mode 4: Reset/erase diagnostic data.

- Generate readiness code ⇒ Page ST-52 .

24-78

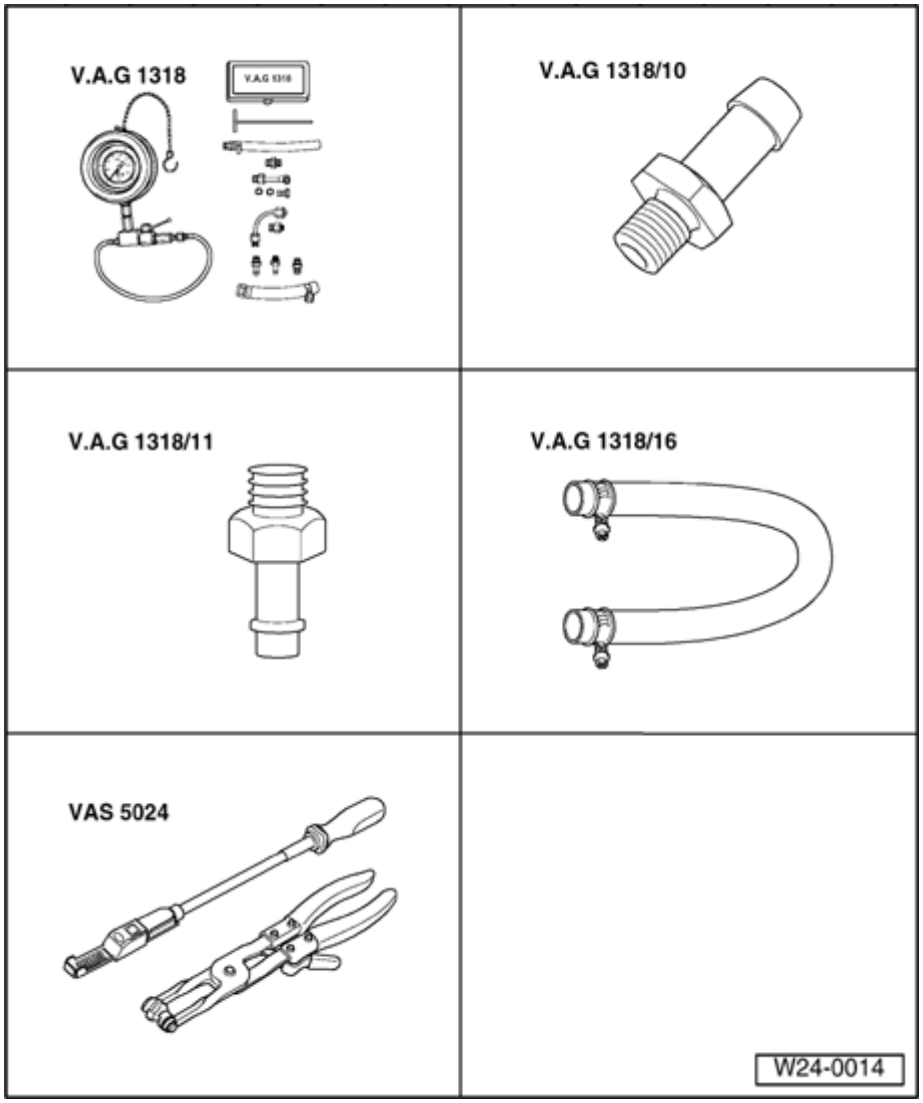

Fuel pressure regulator and residual pressure, checking

Function

The fuel pressure regulator controls the fuel pressure as a function of the Manifold Absolute Pressure (MAP).

Recommended special tools and equipment

- V.A.G 1318 pressure gauge
- V.A.G 1318/10 adapter
- V.A.G 1318/11 adapter
- V.A.G 1318/16 hose adapter
- VAS5024A assembly tool for spring-type clamps

24-79

Test requirements

- Parking brake must be engaged or else daylight driving lights will be switched on.
- For vehicles with automatic transmission, selector lever must be in -P-.
- Delivery quantity and check-valve of Fuel Pump (FP) OK, check ⇒ Page 20-15 , Fuel Pump (FP), checking.
- Ignition switched off.

Test sequence

Observe safety precautions ⇒ Page 24-21 .

Observe rules for cleanliness ⇒ Page 24-23 .

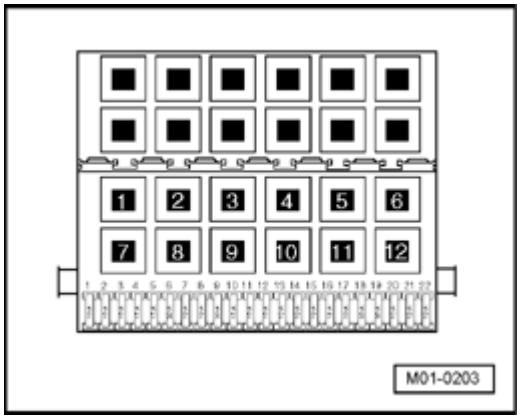

- Remove fuse no. 18 from fuse holder.

24-80

WARNING!

- ***The fuel or fuel lines in fuel system can become very hot (danger of scalding)!***
- ***In addition, the fuel system is under pressure! Before opening the system, pla rags around the connection area and rele pressure by carefully loosening the connection!***
- ***Wear protective goggles and protective gloves when working on the fuel system!***

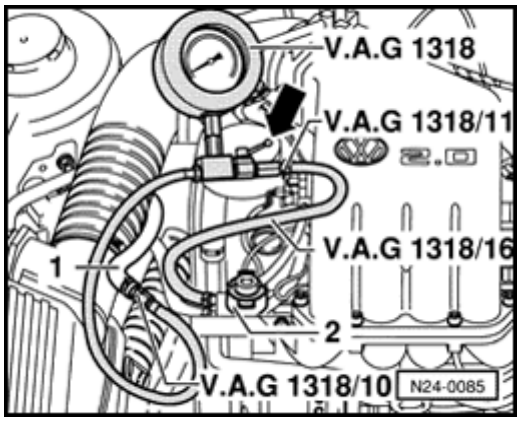

- Disconnect fuel supply line -1- from connecti on fuel rail -2- and connect to adapter V.A.G 1318/10 at pressure gauge V.A.G 1318
- Use a rag to catch escaping fuel.
- Connect pressure gauge (V.A.G 1318) with adapters ((V.A.G 1318/11) and ((V.A.G 1318 to fuel rail -2-.
- Open shut-off valve of pressure gauge. The lever points in the direction of flow (arrow).

- Re-insert fuse 18 (fuel pump) into fuse holde

- Start engine and let run at idle.

- Measure fuel pressure.

  Specified value: approx. 2.5 bar positive pressure

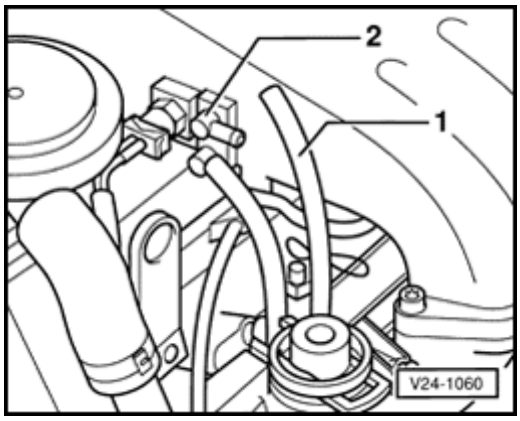

- Disconnect vacuum hose -1- from connectin piece -2-. Fuel pressure should rise to appro 3.0 bar positive pressure rise.
- Switch ignition off.

Note:

If fuel should escape at the vacuum connectior the pressure regulator, replace fuel pressure regulator ⇒ Page 24-17 , item 3 .

- Check for proper seal and residual pressure. Observe pressure drop on pressure gauge fo this. After 10 minutes at least 2.0 bar positive pressure should still be present.

If residual pressure falls below 2 bar positive pressure:

- Start engine and let run at idle.

24-82

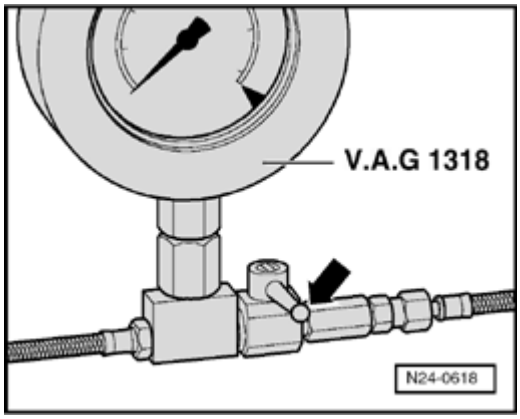

- Wait until pressure has dropped, and then switch off ignition. Simultaneously close shut-off valve of pressure gauge (lever perpendicular to direction of flow -arrow-).
- Observe pressure drop on pressure gauge.

If pressure does drop again:

- Test check-valve of Fuel Pump (FP) ⇒ Page 20-15 , Fuel Pump (FP), checking.

If pressure does not drop:

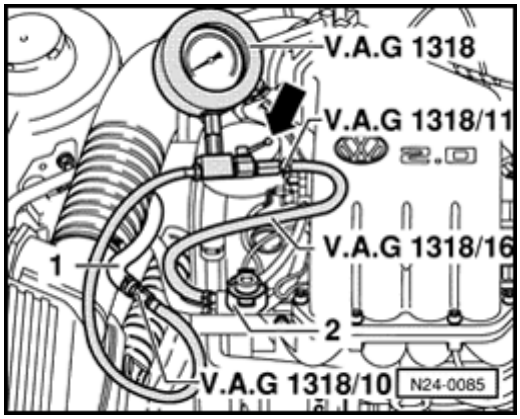

- Open stop valve of pressure gauge (lever in direction of flow -arrow-).
- Start engine and let run at idle.
- Wait until pressure has dropped, and then switch off ignition. Simultaneously pinch return hose tightly together.

If pressure does not drop:

- Replace fuel pressure regulator ⇒ Page 24-17 , item 3 .
- Erase DTC memory of Engine Control Module (ECM) ⇒ Page ST-26 , Diagnostic mode 4: Reset/erase diagnostic data.

24-83

- Generate readiness code ⇒ Page ST-52 .

If pressure does drop again:

- Check whether line connections, O-rings in fuel distributor, and fuel injectors are properly sealed.

- Check pressure gauge for proper seal.

Note:

Before removing pressure gauge, put cleaning rags back around line connection which is to be disconnected.

- Erase DTC memory of Engine Control Module (ECM) ⇒ Page ST-26 , Diagnostic mode 4: Reset/erase diagnostic data.

- Generate readiness code ⇒ Page ST-52 .

24-84

Intake system for leaks (false air), checking

Checking with engine leak detection spray

Recommended special tools and equipment

- Engine leak detection spray G 001 800 A1

Test requirements

- Parking brake must be engaged or else daylight driving lights will be switched on.
- For vehicles with automatic transmission, selector lever must be in -P-.
- Coolant temperature must be at least 80 °C ⇒ Page ST-15 , Diagnostic mode 1: Check measured values; PID 5, Coolant temperature.

24-85

Test sequence

Note:

- *Vacuum in the intake system sucks in the leak detection spray with false air. Leak detection spray decreases ignition quality of the fuel mixture. This causes a drop in engine speed and changes the value produced by the Heated Oxygen Sensor (HO2S).*

- *It is absolutely necessary to follow the safety precautions listed on the can.*

- Connect diagnostic tester ⇒ Page ST-8 .

- Start engine and let run at idle.

- Under address word 33, select "Diagnostic mode 1: Checking measured values."

- Select the following measured values:

  - PID 06: Short time gasoline-air ratio bank 1

  - PID 12: Engine rotations per minute (RPM)

- Observe the short time gasoline-air ratio bank 1 as well as engine speed.

- Spray intake system parts with engine leak detection spray in a systematic manner.

24-86

If engine speed drops or if the short-term gasoline-air ratio changes:

- End diagnosis and switch ignition off.
- Check sprayed part of intake system for leaks, and repair the malfunction.
- Erase DTC memory of Engine Control Module (ECM) ⇒ Page ST-26 , Diagnostic mode 4: Reset/erase diagnostic data.
- Generate readiness code ⇒ Page ST-52 .

24-87

Function tests

Oxygen sensor and oxygen sensor regulation before catalytic converter, checking

Recommended special tools and equipment

- V.A.G1526 Multimeter or V.A.G1715 multimeter
- V.A.G1594 Connector test kit
- Wiring diagram

Test requirements

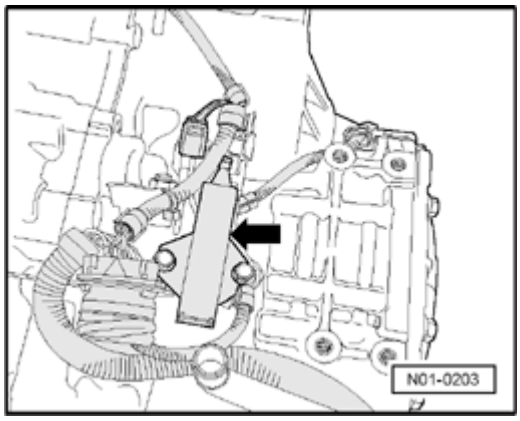

- The respective fuses of Heated Oxygen Sensor (HO2S) -G39- must be OK:

⇒ *Electrical Wiring Diagrams, Troubleshooting & Component Locations*

- Battery voltage must be at least 11.5 volts.
- Ground (GND) connections between engine and chassis must be OK.
- All electrical consumers such as lights and rear window defroster must be switched off.

- Parking brake must be engaged or else daylight driving lights will be switched on.
- For vehicles with automatic transmission, selector lever must be in -P-.
- If vehicle is equipped with an A/C system, it must be switched off.
- Exhaust system must be properly sealed between catalytic converter and cylinder head.
- Coolant temperature must be at least 80 °C ⇒ Page ST-15 , Diagnostic mode 1: Check measured values; PID 5, Coolant temperature.
- Oxygen sensor heater for oxygen sensor before catalytic converter must be OK, check ⇒ Page 24-25 .

Test sequence

- Select the lambda test results and check whether the specified values are being reached ⇒ Page ST-28 , Diagnostic mode 5: Check output of oxygen sensor signals.

If specified values are obtained:

- End diagnosis and switch ignition off.

24-89

If specified values are not obtained:

- End diagnosis and let engine continue to rur idle.

- Check primary voltage ⇒ Page 24-89 .

Checking primary voltage

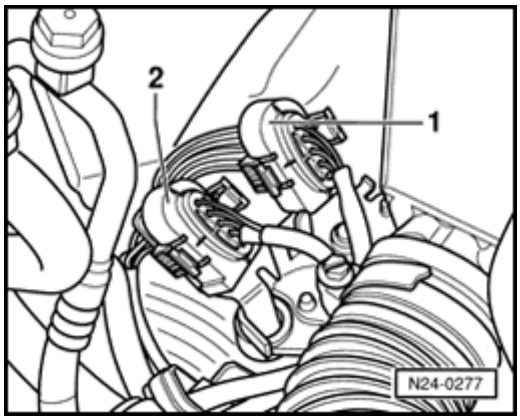

- Disconnect 4-pin harness connector (black) Heated Oxygen Sensor (HO2S) -G39- (item 1).

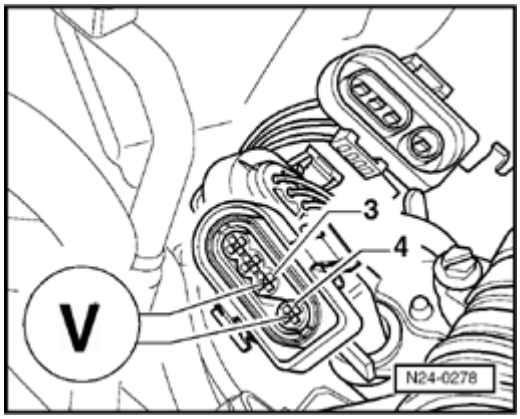

- Connect multimeter for voltage measuremen terminals 3 + 4 of connector to Engine Contr Module (ECM) and measure primary voltage

  Specified value: 0.400 to 0.500 Volts

- Switch ignition off.

24-90

If specified value is not obtained:

- Test oxygen sensor wires ⇒ Page 24-91 .

If specified value is obtained:

- Replace Bank 1 Heated Oxygen Sensor (HO2S) -G39- ⇒ Page 26-4 , item 7 .

- Erase DTC memory of Engine Control Module (ECM) ⇒ Page ST-26 , Diagnostic mode 4: Reset/erase diagnostic data.

- Generate readiness code ⇒ Page ST-52 .

24-91

Checking oxygen sensor wires

- Connect test box to control module wiring harness ⇒ Page ST-11 , connect test box fo wiring test.

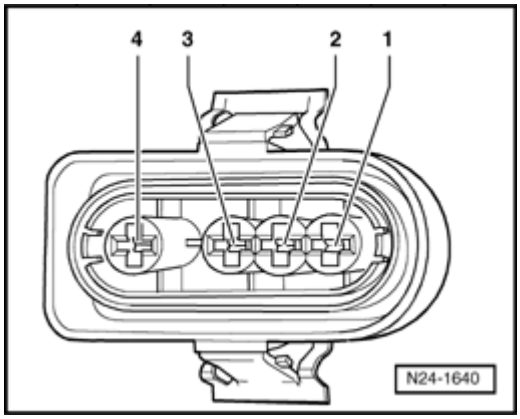

- Check wires between test box and 4-pin connector to Engine Control Module (ECM) f open circuit according to wiring diagram.

  Terminal 3 + socket 42

  Terminal 4 + socket 20

  Wire resistance: max. 1.5 Ω

- Check wires for short circuit to B+ or Ground (GND).

  Specified value: ∞ Ω

If no malfunctions are found in wires:

- Replace Bank 1 Heated Oxygen Sensor (HC -G39- ⇒ Page 26-4 , item 7 .
- Erase DTC memory of Engine Control Modu (ECM) ⇒ Page ST-26 , Diagnostic mode 4: Reset/erase diagnostic data.
- Generate readiness code ⇒ Page ST-52 .

24-92

Oxygen sensor and oxygen sensor regulation behind catalytic converter, checking

Recommended special tools and equipment

- V.A.G1526 Multimeter or V.A.G1715 Multimeter
- V.A.G1594 Connector test kit
- Wiring diagram

Test requirements

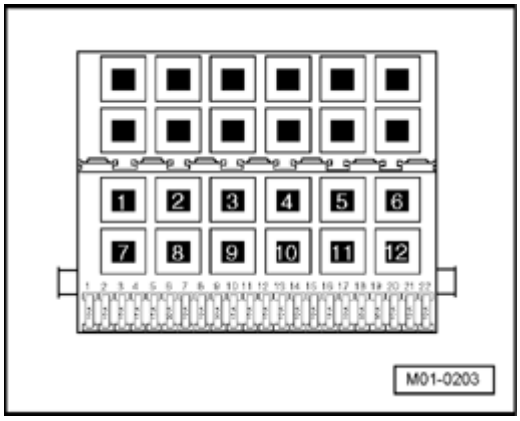

- The respective fuses of Heated Oxygen Sensor (HO2S) 2 -G108- must be OK:

⇒ *Electrical Wiring Diagrams, Troubleshooting & Component Locations*

- Battery voltage must be at least 11.5 volts.

- Ground (GND) connections between engine and chassis must be OK.
- All electrical consumers such as lights and rear window defroster must be switched off.
- Parking brake must be engaged or else daylight driving lights will be switched on.
- For vehicles with automatic transmission, selector lever must be in -P-.
- If vehicle is equipped with an A/C system, it must be switched off.
- Exhaust system must be properly sealed between catalytic converter and cylinder head.
- Coolant temperature must be at least 80 °C ⇒ Page ST-15 , Diagnostic mode 1: Check measured values; PID 5, Coolant temperature.
- Oxygen sensor heater for oxygen sensor behind catalytic converter must be OK, check ⇒ Page 24-28 .

Test sequence

- Select the lambda test results and check whether the specified values are being reached ⇒ Page ST-28 , Diagnostic mode 5: Check output of oxygen sensor signals.

24-94

If specified values are obtained:

- End diagnosis and switch ignition off.

If specified values are not obtained:

- End diagnosis and let engine continue to rur idle.

- Check primary voltage ⇒ Page 24-94 .

Checking primary voltage

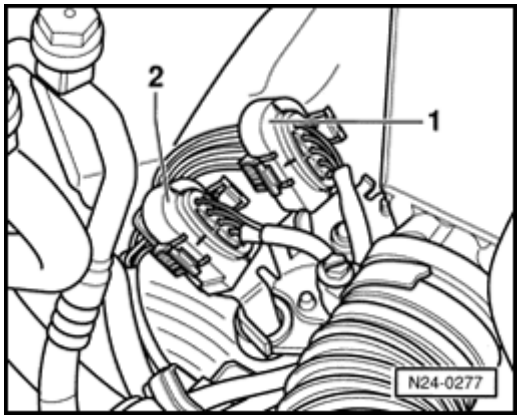

- Disconnect 4-pin harness connector (brown) Heated Oxygen Sensor (HO2S) 2 -G108- (2

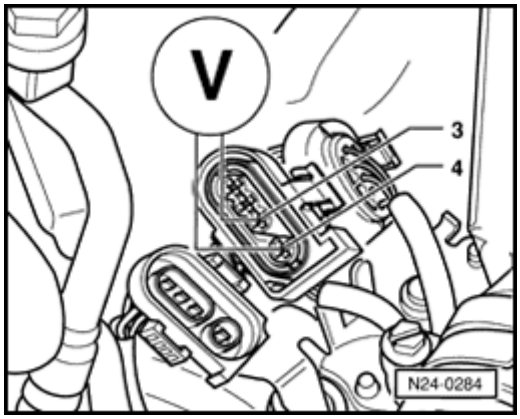

- Connect multimeter for voltage measuremen terminals 3 + 4 of connector to Engine Contr Module (ECM) and measure primary voltage

  Specified value: 0.400 to 0.500 Volts

- Switch ignition off.

24-95

If specified value is not obtained:

- Test oxygen sensor wires ⇒ Page 24-95 .

If specified value is obtained:

- Replace Bank 1 Heated Oxygen Sensor (HC 2 -G108- ⇒ Page 26-3 , item 4 .

- Replace Bank 1 Heated Oxygen Sensor (HC 2 -G108- ⇒ Page 26-3 , item 4 .

- Erase DTC memory of Engine Control Modu (ECM) ⇒ Page ST-26 , Diagnostic mode 4: Reset/erase diagnostic data.

- Generate readiness code ⇒ Page ST-52 .

Checking oxygen sensor wires

- Connect test box to control module wiring harness ⇒ Page ST-11 , connect test box fo wiring test.

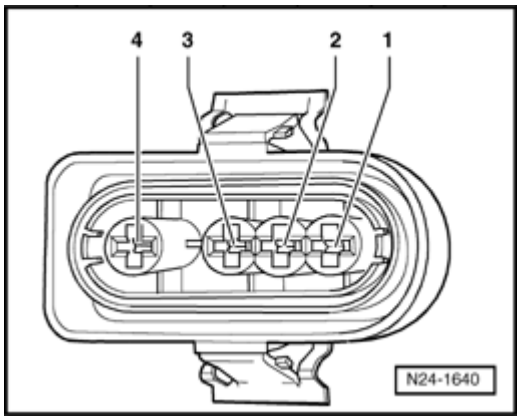

- Check wires between test box and 4-pin connector to Engine Control Module (ECM) f open circuit according to wiring diagram.

  Terminal 3 + socket 58

  Terminal 4 + socket 13

  Wire resistance: max. 1.5 Ω

24-96

- Check wires for short circuit to B+ or Ground (GND).

  Specified value: ∞ Ω

If no malfunctions are found in wires:

- Replace Bank 1 Heated Oxygen Sensor (HO2S) 2 -G108- ⇒ Page 26-3 , item 4 .

- Erase DTC memory of Engine Control Module (ECM) ⇒ Page ST-26 , Diagnostic mode 4: Reset/erase diagnostic data.

- Generate readiness code ⇒ Page ST-52 .

24-97

Intake air pre-heating, checking

Recommended special tools and equipment

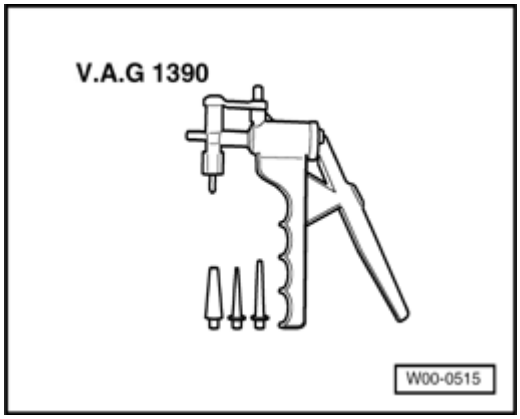

- V.A.G1390 hand vacuum pump

Checking regulator flap

Test requirement

- Vacuum unit for regulator flap has proper seal

24-98

Test sequence

- Loosen upper section of air filter and remove filter insert.
- Place air filter upper section so that regulatir flap in air filter lower section can be seen.
- Disconnect vacuum line of vacuum unit from temperature regulator.
- Connect vacuum line to hand vacuum pump V.A.G 1390.

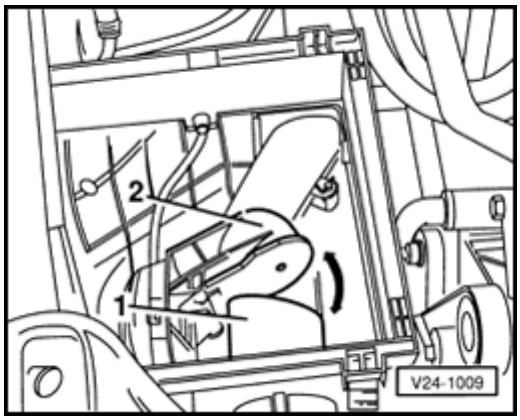

- Operate pump and check regulator flap for e of movement and function of vacuum unit.

  Regulator flap must seal cold air connection seal

24-99

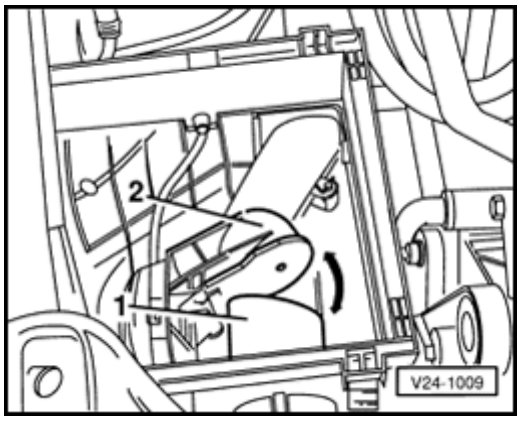

Checking temperature regulator

- Connect vacuum line to temperature regulat (brass connecting tube or with notch).
- Start engine and let run at idle.
- Check regulator flap position after max. 20 seconds.

Temperature of temperature regulator	Regulator flap position
• Below 20 ° C	Cold air connection sealed
• Above 30 ° C	Warm air connectic 2- sealed
• Between 20 and 30 ° C	Between cold- and warm air connectio

24-100

Engine Control Module (ECM)

Function

The Engine Control Module (ECM) controls fuel injection, the throttle valve control module, oxygen sensor control, ignition, knock control, EVAP canister purge regulator valve 1, engine speed limitation via fuel injectors and fuel pump relay, and On Board Diagnostic (OBD).

24-101

Voltage supply for Engine Control Module (ECM), checking

Recommended special tools and equipment

- V.A.G1526 Multimeter or V.A.G1715 multimeter
- V.A.G1594 Connector test kit
- Wiring diagram

Test requirements

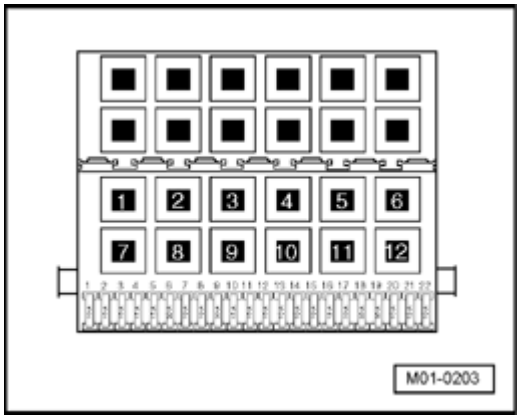

- The respective fuses of Motronic Engine Control Module (ECM) - J220- must be OK:

⇒ *Electrical Wiring Diagrams, Troubleshooting & Component Locations*

24-102

- Fuel Pump (FP) Relay -J17- must be OK, check:

⇒ *Electrical Wiring Diagrams, Troubleshooting & Component Locations*

- Generator (GEN) must be OK, checking:

⇒ *Electrical Wiring Diagrams, Troubleshooting & Component Locations*

- Battery voltage must be at least 11.5 volts.
- All electrical consumers such as lights and rear window defroster must be switched off.
- Parking brake must be engaged or else daylight driving lights will be switched on.
- For vehicles with automatic transmission, selector lever must be in -P-.
- If vehicle is equipped with an A/C system, it must be switched off.
- Ground (GND) connections between engine, transmission and chassis must be OK.

24-103

Test sequence

- Connect test box to control module wiring harness ⇒ Page ST-11 , connect test box for wiring test.

Checking voltage supply at terminal 30

- Measure voltage supply between sockets 1 + 54 of test box.

  Specified value: at least 11.5 V

If specified value is not obtained:

- Check wire connections to relay carrier and Ground (GND) connection of Engine Control Module (ECM) according to wiring diagram:

⇒ *Electrical Wiring Diagrams, Troubleshooting & Component Locations*

- Erase DTC memory of Engine Control Module (ECM) ⇒ Page ST-26 , Diagnostic mode 4: Reset/erase diagnostic data.

- Generate readiness code ⇒ Page ST-52 .

24-104

Checking voltage supply at terminal 15

- Measure voltage supply between sockets 1 + 23 of test box.

- Switch ignition on.

  Specified value: at least 11.5 V

- Switch ignition off.

If specified value is not obtained:

- Check wire connections to relay carrier and Ground (GND) connection of Engine Control Module (ECM) according to wiring diagram:

⇒ *Electrical Wiring Diagrams, Troubleshooting & Component Locations*

- Erase DTC memory of Engine Control Module (ECM) ⇒ Page ST-26 , Diagnostic mode 4: Reset/erase diagnostic data.

- Generate readiness code ⇒ Page ST-52 .

24-105

Engine Control Module (ECM), replacing

Requirement

- Ignition switched off.

Removing

- Disengage connector from control module and then disconnect it.

- Remove control module.

Installing

- Insert new control module into mounting plate.

- Install connector from control module and engage.

Note:

The great availability of equipment options makes it necessary to adapt the Engine Control Module (ECM) to the vehicle (e.g. throttle valve control module or cruise control system). This "writing" function is not possible with the generic scan tool.

- Functions and components, adapting:

⇒ *Repair Manual, 2.0 Liter 4-Cyl. 2V Fuel Injection & Ignition, Engine Code(s): ABA m.y. 1996-1997, Repair Group 24*

- Generate readiness code ⇒ Page ST-52 .

24-106

Additional signals, Checking

Speed signal, checking

Recommended special tools and equipment

- V.A.G1526 Multimeter or V.A.G1715 multimeter
- V.A.G1594 Connector test kit
- Wiring diagram

Test requirements

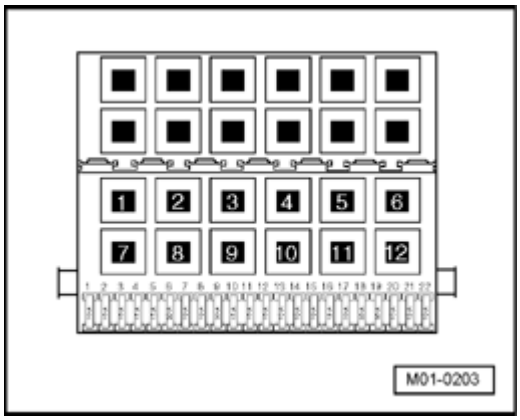

- The respective fuses of Motronic Engine Control Module (ECM) -J220- must be OK:

⇒ *Electrical Wiring Diagrams, Troubleshooting & Component Locations*

- Battery voltage must be at least 11.5 volts.
- Speedometer -G21- must be OK.

24-107

Test sequence

Note:

To test speed signal, vehicle must be driven. Doing this requires a second person.

WARNING!

Secure Scan Tool (ST) on the rear seat and have it operated from there by second technician.

- Connect diagnostic tester ⇒ Page ST-8 .
- Start engine and let run at idle.
- Under address word 33, select "Diagnostic mode 1: Checking measured values."
- Select the measuring value "PID 13: Vehicle speed".
- Perform a road test, and have the 2nd person observe the indication on the display.

24-108

- Check specified value of the vehicle speed:

PID	Diagnostic text	Specified value:
13:	Vehicle speed	approx. vehicle speed

- End road test and switch ignition off.

If no speed is indicated:

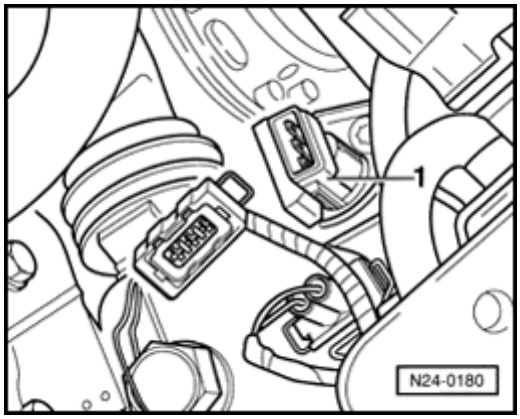

- Disconnect 3-pin connector from Speedometer Vehicle Speed Sensor (VSS) -G22- (-1-).

24-109

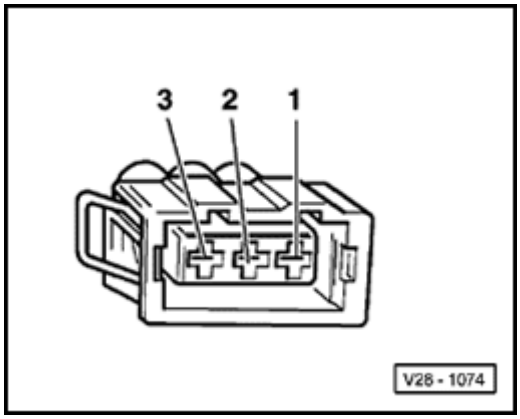

- Connect multimeter to terminals 1 + 3 of connector for voltage measurement.
- Switch ignition on.

  Specified value: at least 9.0 V
- Switch ignition off.

If specified value is not obtained:

- Check wire connections according to wiring diagram:

⇒ *Electrical Wiring Diagrams, Troubleshooting & Component Locations*

If specified value is obtained:

- Connect test box to control module wiring harness ⇒ Page ST-11 , connect test box for wiring test.
- To measure voltage, connect multimeter between sockets 56 (Ground (GND)) + 65 (speed signal) of test box.
- Raise left front wheel.
- Switch ignition on.
- Rotate front wheel, and observe voltage indicated while doing so.

  Specified value: 0.0 to at least 4.0 V, fluctuating

24-110

Note:

The right front wheel must not turn during this, hold it steady if necessary.

If indicated voltage does not oscillate:

- Remove instrument cluster:

⇒ *Repair Manual, Electrical Equipment, Repair Group 90, Instrument cluster, removing and installing*

- Check wire connection from Engine Control Module (ECM) to Speedometer -G21- or to Speedometer Vehicle Speed Sensor (VSS) -G22- according to wiring diagram:

⇒ *Electrical Wiring Diagrams, Troubleshooting & Component Locations*

- Erase DTC memory of Engine Control Module (ECM) ⇒ Page ST-26 , Diagnostic mode 4: Reset/erase diagnostic data.

- Generate readiness code ⇒ Page ST-52 .

24-111

If no malfunctions are found in the wires and there was voltage between terminals 1 + 3:

- Replace Speedometer Vehicle Speed Sensor (VSS) -G22-.

- Erase DTC memory of Engine Control Module (ECM) ⇒ Page ST-26 , Diagnostic mode 4: Reset/erase diagnostic data.

- Generate readiness code ⇒ Page ST-52 .

Exhaust system components, removing and installing

Note:

- *After exhaust system repairs, make sure exhaust system is not under stress and that it has sufficient clearance from the bodywork. If necessary, loosen double clamps and clamp and align exhaust pipe so that sufficient clearance is maintained to the bodywork and support rings carry uniform loads.*
- *Do not use any silicone sealant. Traces of silicone components which are sucked into the engine are not burned there, and they damage the oxygen sensors.*
- *Always replace self-locking nuts.*
- *Components marked with * are tested via On Board Diagnostic (OBD) ⇒ Page ST-22 , Diagnostic mode 3: Check DTC memory.*

Exhaust manifold, front exhaust pipe and catalytic converter with attachments ⇒ Page 26-3 .

Mufflers with mounts ⇒ Page 26-7 .

Check catalytic converter ⇒ Page 26-11 .

26-2

Recommended special tools and equipment

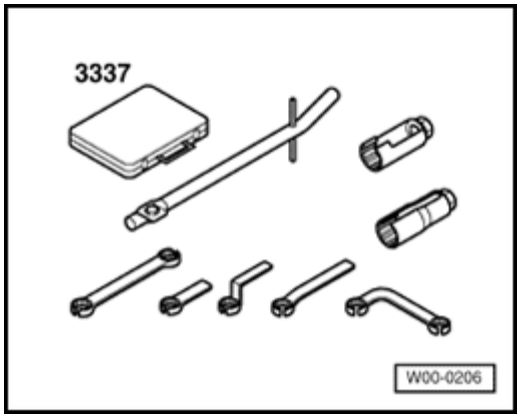

- 3337 Ring spanner set

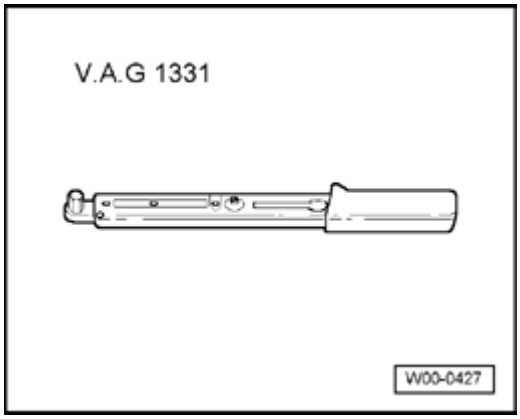

- V.A.G1331 Torque wrench (5 to 50 Nm)

Not illustrated:

- V.A.G1332 Torque wrench (40 to 200 Nm)

26-3

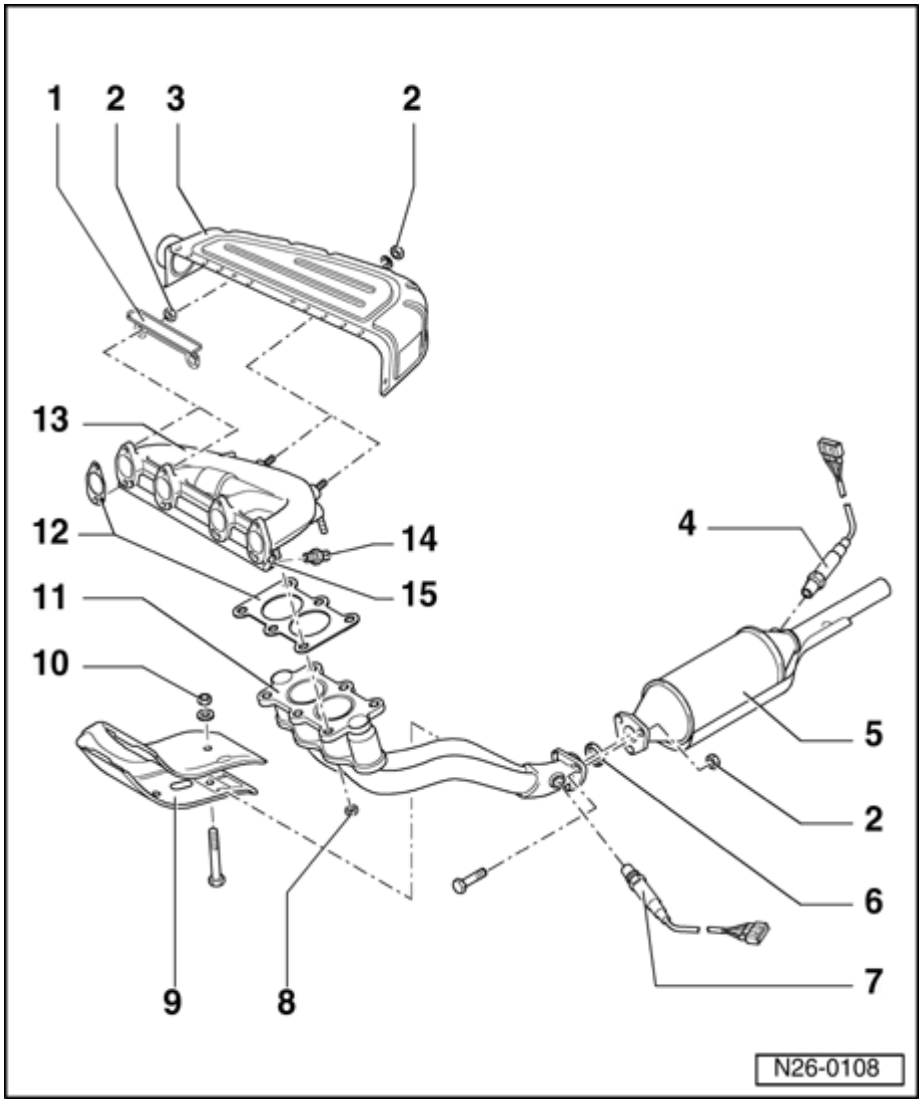

Exhaust manifold, front exhaust pipe and catalytic converter with attachments

1 - Bracket

- For heat deflector

2 - 25 Nm

3 - Heat deflector

4 - Oxygen Sensor (O2S) Behind Three Way Catalytic Converter (TWC) - G130- bank 1*, 50 Nm

- Only grease threads with G 052 112 A3 locking compound, do NOT allow locking compound to get into slots on sensor body
- Voltage supply of oxygen

sensor heater via Fuel Pump (FP) Relay - J17-

- Check oxygen sensor heater for Oxygen Sensor (O2S) behind Three Way Catalytic Converter (TWC) ⇒ Page 24-28
- Check Oxygen Sensor (O2S) and oxygen sensor control behind Three Way Catalytic Converter (TWC) ⇒ Page 24-92

26-4

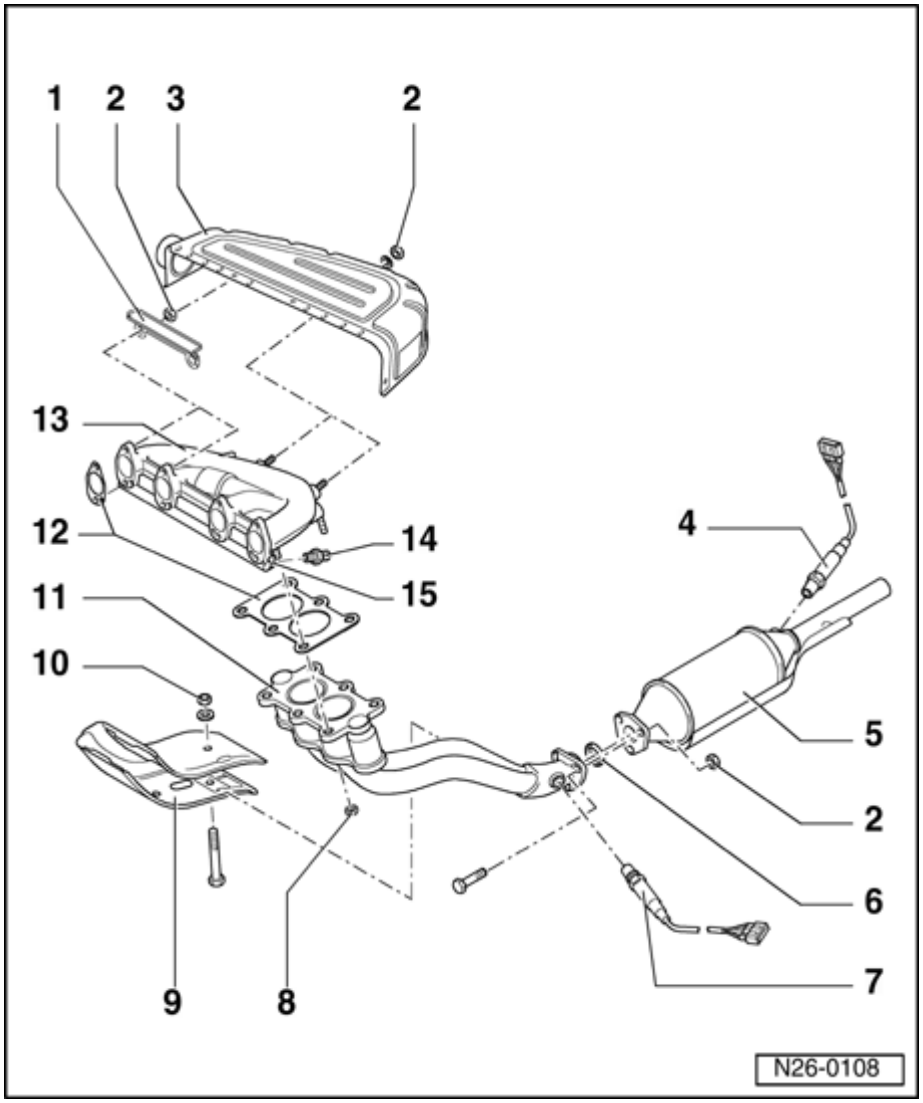

5 - Catalytic converter

- Checking ⇒ Page 26-11

6 - Seal

- Always replace

7 - Heated Oxygen Sensor (HO2S) 1 - G39-*, 50 Nm

- Only grease threads with G 052 112 A3 locking compound, do NOT allow locking compound to get into slots on sensor body
- Voltage supply of oxygen sensor heater via Fuel Pump (FP) Relay - J17-
- Check oxygen sensor

heater for Oxygen Sensor (O2S) before Three Way Catalytic Converter (TWC) ⇒ Page 24-25

- Check Oxygen Sensor (O2S) and oxygen sensor control before Three Way Catalytic Converter (TWC) ⇒ Page 24-87

8 - 40 Nm

- Tightening sequence ⇒ Fig. 1

26-5

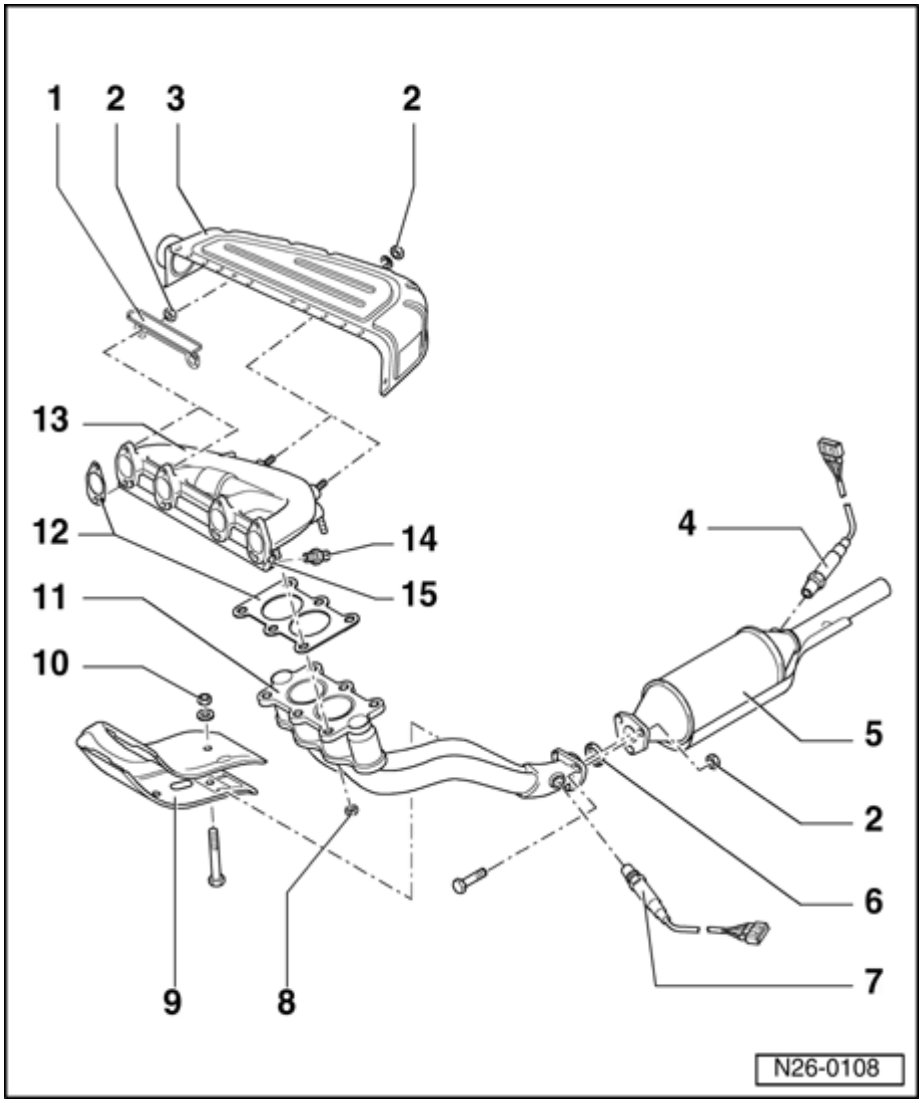

9 - Heat shield

10 - 10 Nm

11 - Front exhaust pipe

12 - Gasket

- Always replace

13 - Exhaust manifold

14 - Connecting piece, 35 Nm

15 - Connection for Secondary Air Injection (AIR) system

26-6

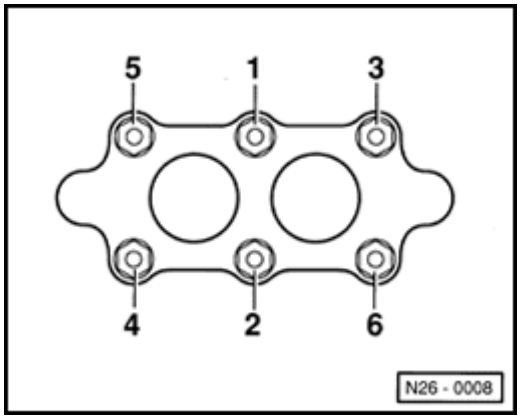

Fig. 1 Tightening sequence for front exhaust pipe to exhaust manifold

26-7

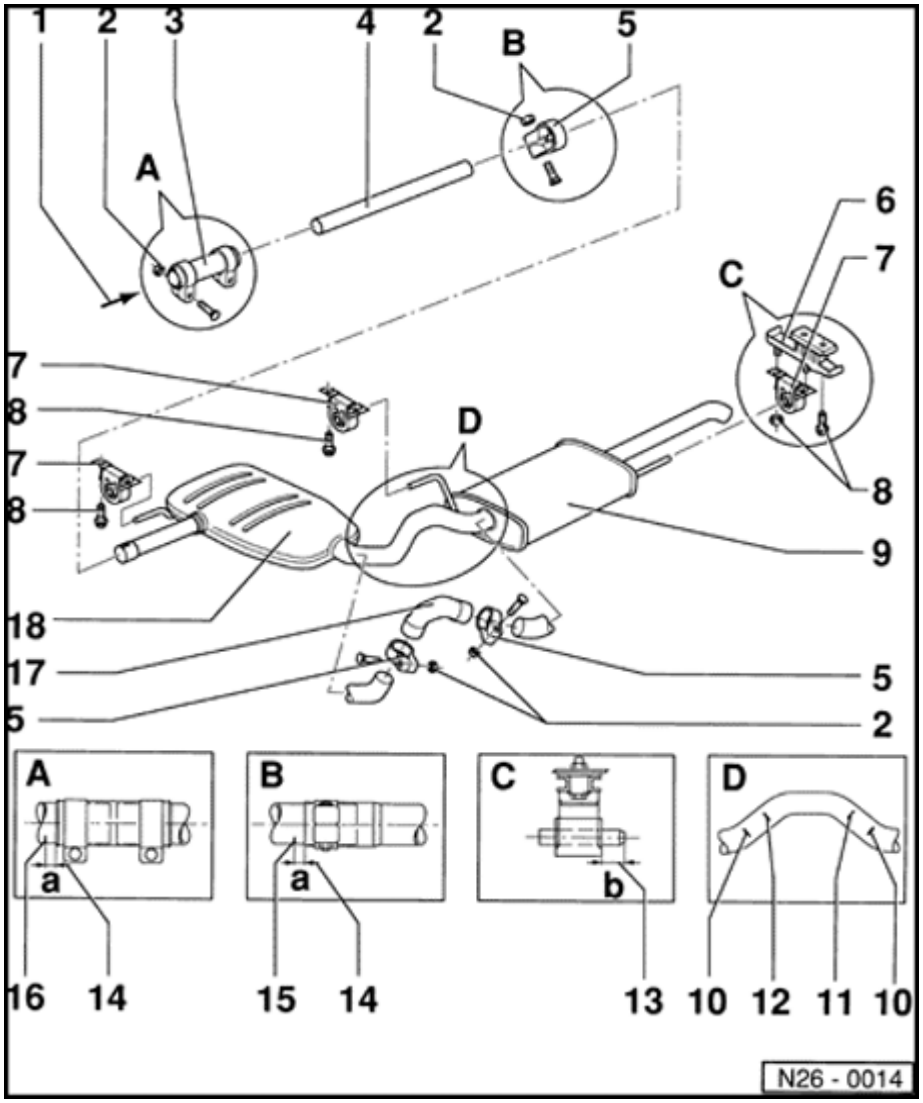

Mufflers with mounts

Note:

Align exhaust system lengthwise so that dimensions -a- (⇒ item 14) and -b- (⇒ item 13) are maintained.

1 - From Three Way Catalytic Converter (TWC)

- ⇒ Page 26-4 , item 5

2 - 40 Nm

3 - Double clamp

4 - Intermediate pipe

5 - Clamp

6 - Console

7 - Support ring

8 - 25 Nm

26-8

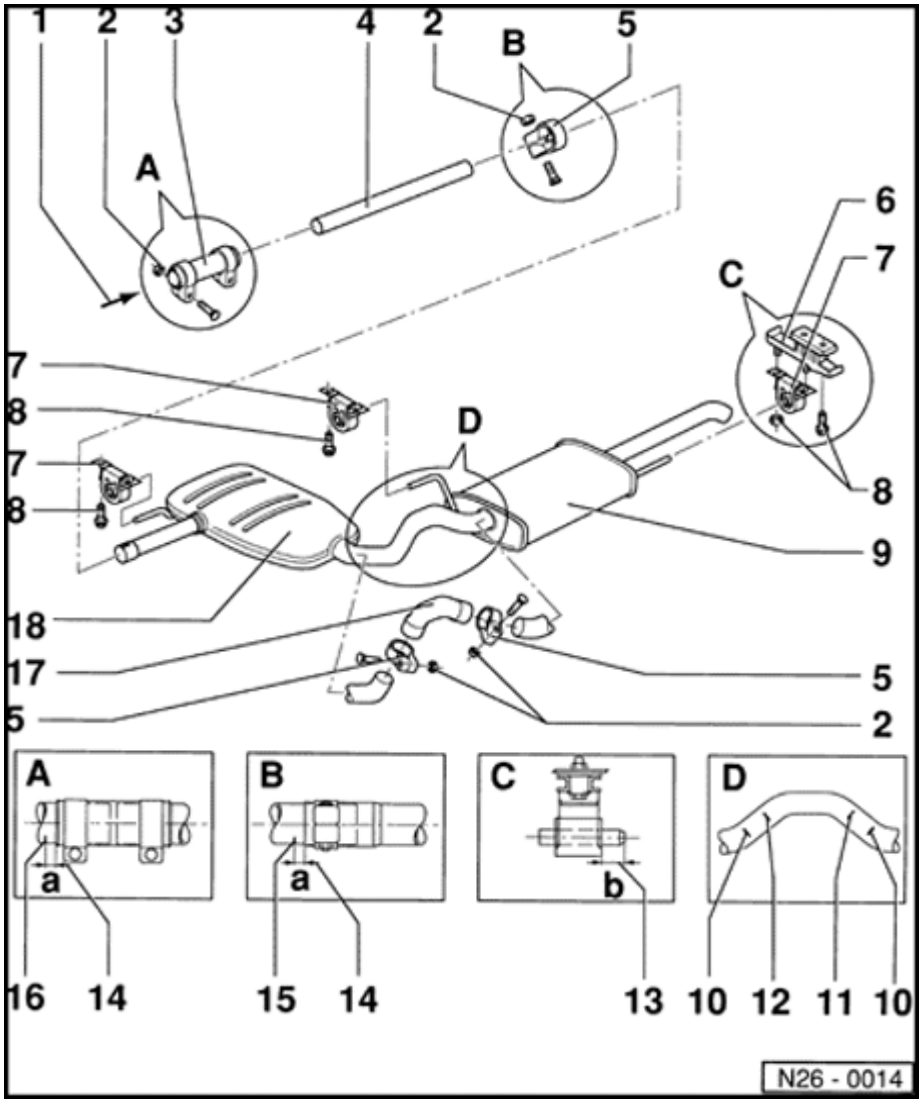

9 - Rear muffler

10 - Marking

- For clamp
- Three times on length

- Distance of clamp/marking ⇒ item 14

11 - Cutting point

- For repairs
- When replacing center muffler

- Marked by three depressions around the circumference of the connecting pipe

- At factory, center and rear mufflers are installed as a single component. Replacement center and rear mufflers are supplied separately, with replacement connecting

pipe and two clamps for connecting joint.

- Cut through connecting pipe with hack saw (e.g. VAG 1523) at right angle, at cutting point.

26-9

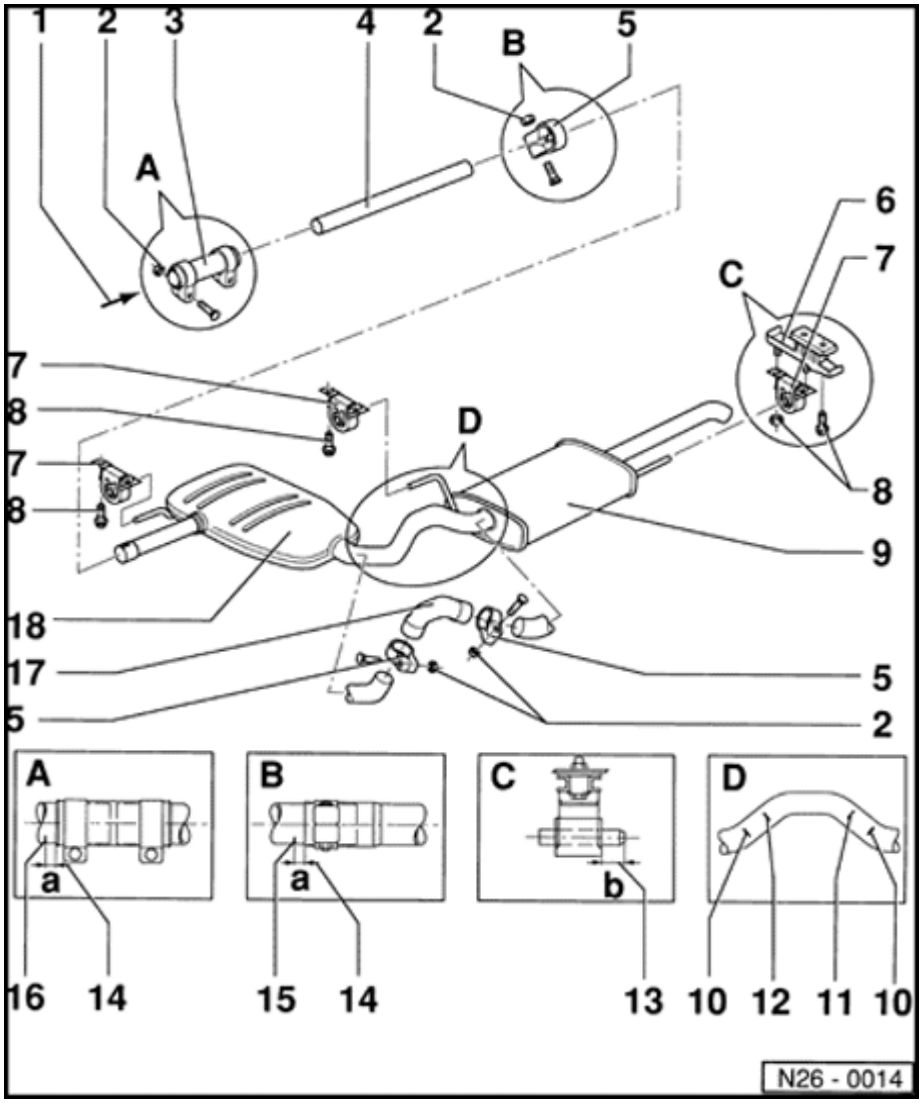

12 - Separating point

- For repairs
- When replacing rear muffler

- Marked by three depressions around the circumference of the connecting pipe
- At factory, center and rear mufflers are installed as a single component. Replacement center and rear mufflers are supplied separately, with replacement connecting pipe and two clamps for connecting joint.
  - Cut through connecting pipe with hack saw (e.g. VAG 1523) at right angle, at

cutting point.

13 - Dimension -b- = approx. 10 mm

14 - Dimension -a- = approx. 5 mm

26-10

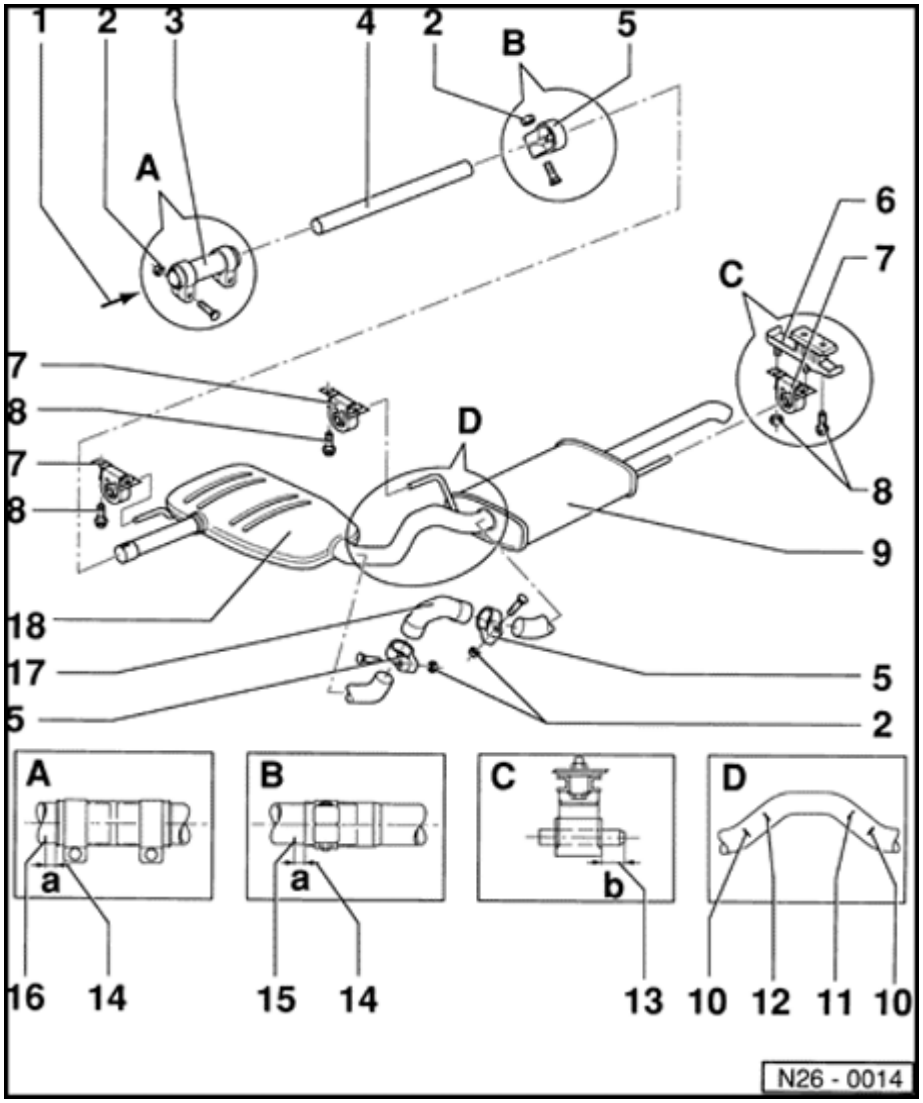

15 - Marking

- Marked three times on pipe circumference

16 - Marking

- Marked three times on pipe circumference
- S = manual transmission, A = autom. transmission

17 - Connecting pipe

18 - Center muffler

26-11

Three Way Catalytic Converter (TWC), checking

Function test

- Select the measuring value "Test-ID 01: Catalytic converter" and check whether the specified values are being reached ⇒ Page ST-36 , Diagnostic mode 6: Check test results of components that are not continuously monitored

- End diagnosis and switch ignition off.

If the specified values are exceeded:

- Replace catalytic converter ⇒ Page 26-4 , item 5 .

- Erase DTC memory of Engine Control Module (ECM) ⇒ Page ST-26 , Diagnostic mode 4: Reset/erase diagnostic data.

- Generate readiness code ⇒ Page ST-52 .

26-12

Secondary Air Injection (AIR) system

WARNING!

Observe the following for all installations, especially in engine compartment due to lack of room:

- ***Route lines of all types (e.g. for fuel, hydraulic, EVAP canister system, coolant and refrigerant, brake fluid, vacuum) and electrical wiring so that the original path is followed.***

- ***Watch for sufficient clearance to all moving or hot components.***

Function

Air is blown behind the exhaust valves by the Secondary Air Injection (AIR) system during a cold start. Thereby, the emission gas is enriched with oxygen, initiating a secondary combustion and thereby shortening the warm-up phase of the catalytic converter. Activation is triggered by the Motronic Engine Control Module (ECM) -J220- and sent via the Secondary Air Injection (AIR) Pump Relay -J299- to the Secondary Air Injection (AIR) Solenoid Valve -N112- and the combination valve.

26-13

Note:

- *Always replace seals and gaskets.*
- *Vacuum lines and hose connections must not have leaks.*
- *Vacuum hoses must not be clogged or kinked.*
- *For the electric components to work properly, a voltage of at least 11.5 V is required.*
- *Engine Control Module (ECM) is equipped with On Board Diagnostic (OBD).*
- *Components marked with * are tested via On Board Diagnostic (OBD) ⇒ Page ST-22 , Diagnostic mode 3: Check DTC memory.*
- *It is possible that the control module will recognize a malfunction and store a DTC during some tests. Therefore the following work steps must be performed in the mentioned sequence after ending all tests and repairs.*

  - - Check DTC memory ⇒ Page ST-22 , Diagnostic mode 3: Check DTC Memory,

  - - Erase DTC memory ⇒ Page ST-26 , Diagnostic mode 4: Reset/erase diagnostic data

  - - For completion, generate readiness code ⇒ Page ST-52 .

Removing and installing Secondary Air Injection (AIR) system components ⇒ Page 26-14 .

Check secondary air system for proper seal ⇒

Page 26-18 .

26-14

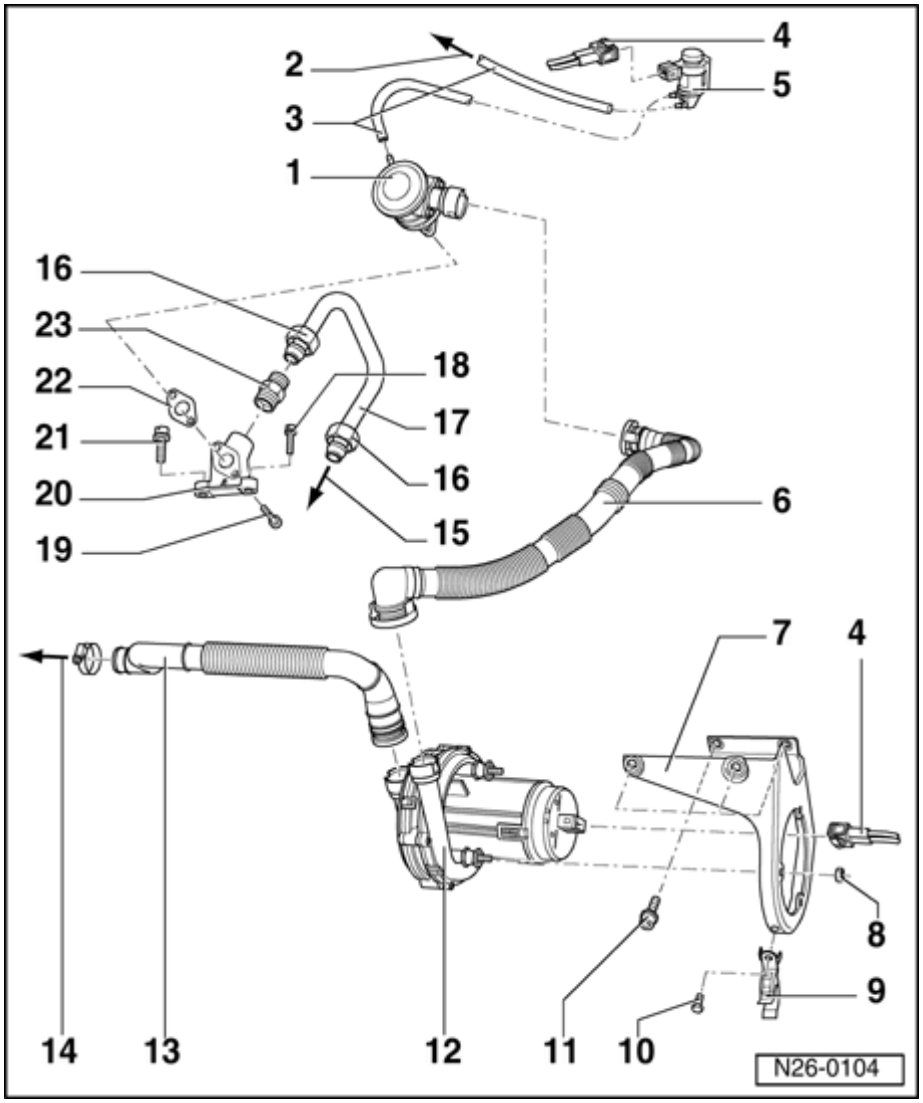

Secondary Air Injection (AIR) system components, removing and installing

Note:

Position of Secondary Air Injection (AIR) Pump Relay - J299- ⇒ Fig. 1 .*

1 - Combination valve

- Checking ⇒ Page 26-28

2 - To connection on pipe to brake booster

3 - Vacuum line

- Check for secure seating

4 - Harness connector

- 2-pin

5 - Secondary Air Injection (AIR) solenoid valve - N112-*

- Checking
  ⇒ Page 26-20

26-15

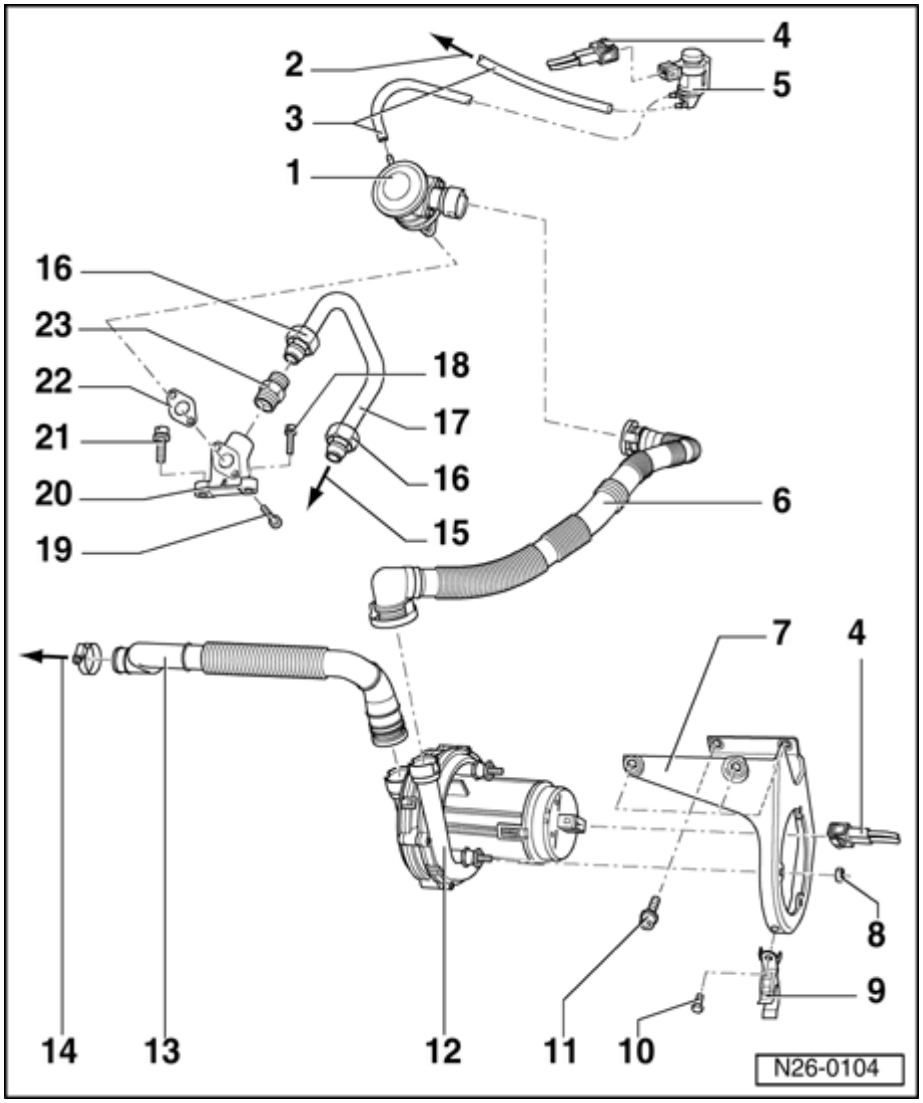

6 - Pressure hose

- Check for secure seating
- To disengage, squeeze together at front

7 - Bracket

- Secured at intake manifold
- For Secondary Air Injection (AIR) pump motor

8 - 10 Nm

9 - Retaining clip

10 - 10 Nm

11 - 25 Nm

12 - Secondary Air Injection (AIR) Pump Motor - V101-*

- Checking ⇒ Page 26-23

13 - Intake hose

- For Secondary Air Injection (AIR) pump
  - Check for secure seating
- To disengage, squeeze together at front

26-16

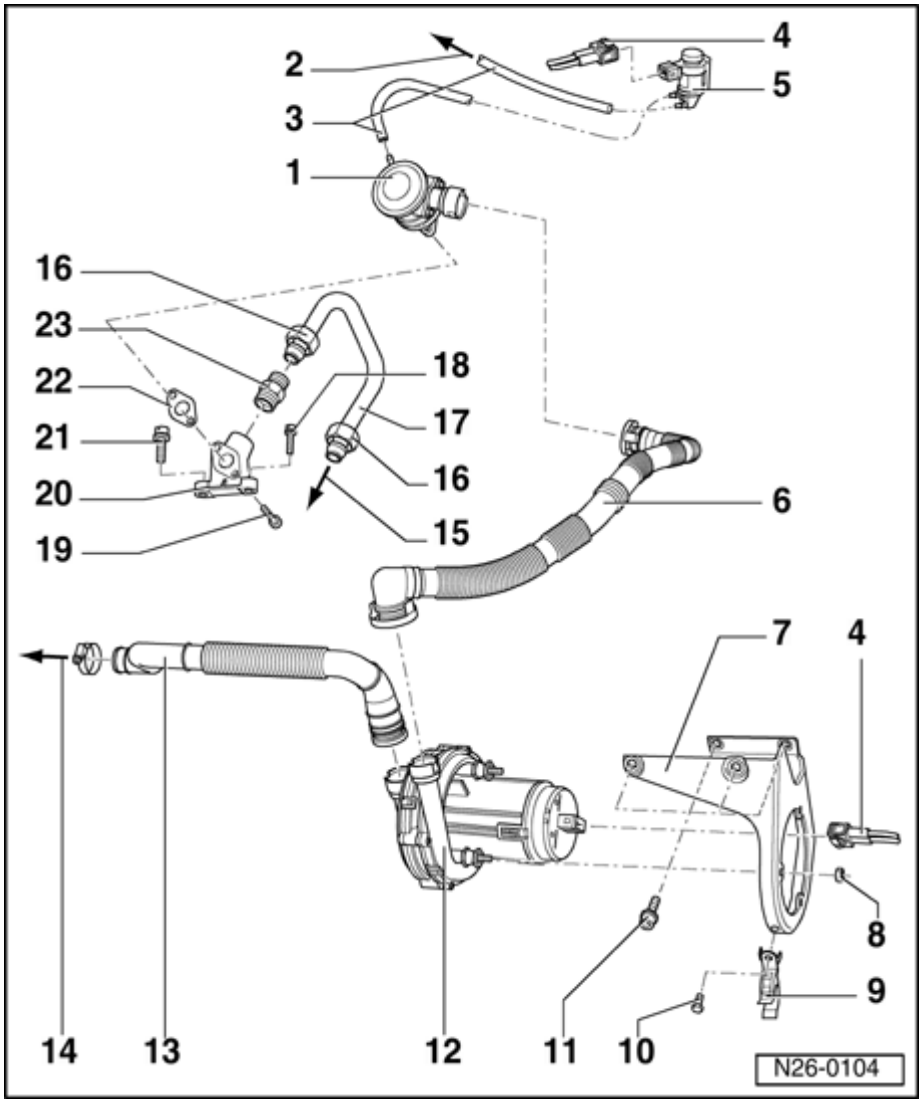

14 - To air filter

15 - To connecting piece at exhaust manifold

- ⇒ Page 26-5 , item 14

16 - 30 Nm

17 - Connection tube

18 - 10 Nm

19 - 10 Nm

20 - Bracket

21 - 25 Nm

22 - Gasket

- Always replace

23 - 35 Nm

26-17

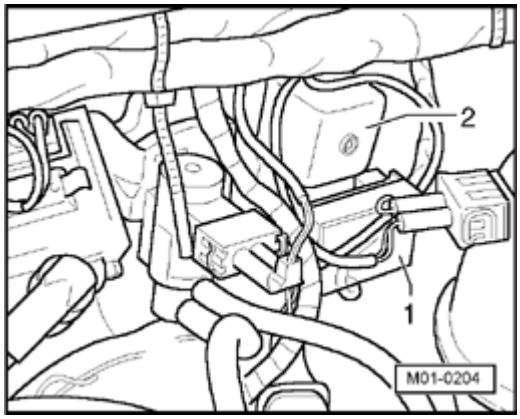

Fig. 1 Position of Secondary Air Injection (AIR) Pump Relay -J299-* (in engine compartment, on bulkhead)

1 - Fuse for Secondary Air Injection (AIR) Pump Relay -J299-

2 - Secondary Air Injection (AIR) Pump Relay -J299-

Note:

- *Remove battery Ground (GND) strap if tools are necessary for removal of relays or control modules from the relay carrier.*
- *Obtain radio code for radios with anti-theft coding before disconnecting battery.*
- *Do not use metallic tools to pry off relays from relay carrier. The terminals could conduct electricity.*

26-18

Secondary Air Injection (AIR) system, checking for proper seal

Function test

- Select the measuring value "Test-ID 03: Secondary Air Injection (AIR) system" and check whether the specified values are being reached ⇒ Page ST-36 , Diagnostic mode 6: Check test results of components that are not continuously monitored

- End diagnosis and switch ignition off.

If the specified values are not reached:

Checking Proper Seal

- Check the pressure hose between Secondary Air Injection (AIR) Pump Motor and combination valve for proper seal ⇒ Page 26-14 , Components of the Secondary Air Injection (AIR) system, removing and installing.

26-19

- Repeat function test.

- Check hoses and hose connections for secure seating.

- Repeat function test.

If malfunction is no longer present:

- Erase DTC memory of Engine Control Module (ECM) ⇒ Page ST-26 , Diagnostic mode 4: Reset/erase diagnostic data.

- Generate readiness code ⇒ Page ST-52 .

26-20

Secondary Air Injection (AIR) valve, checking

Solenoid valve is closed when no voltage is present.

Recommended special tools and equipment

- V.A.G1526 Multimeter or V.A.G1715 multimeter
- V.A.G1594 Connector test kit
- Wiring diagram

Test requirements

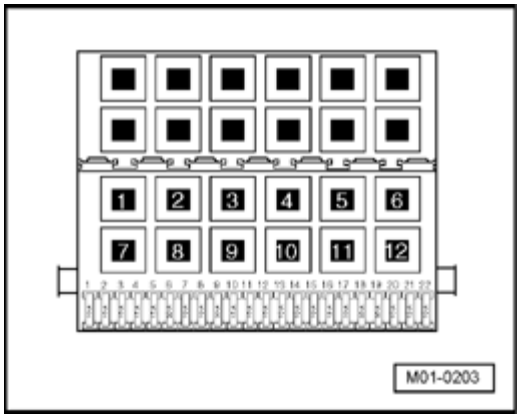

- The respective fuses of Secondary Air Injection (AIR) Solenoid Valve - N112- must be OK:

⇒ *Electrical Wiring Diagrams, Troubleshooting & Component Locations*

- Ignition switched off.

26-21

Test sequence

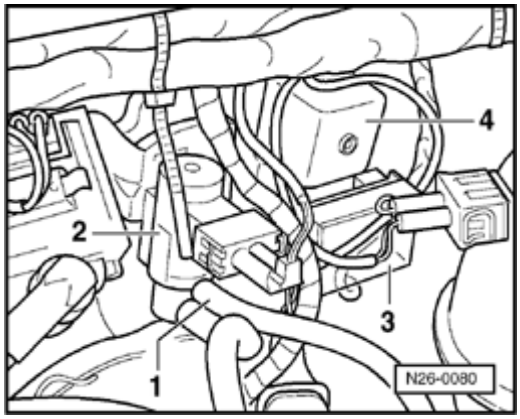

- Disconnect 2-pin connector from Secondary Air Injection (AIR) Solenoid Valve -N112- (-2-).

Checking resistance

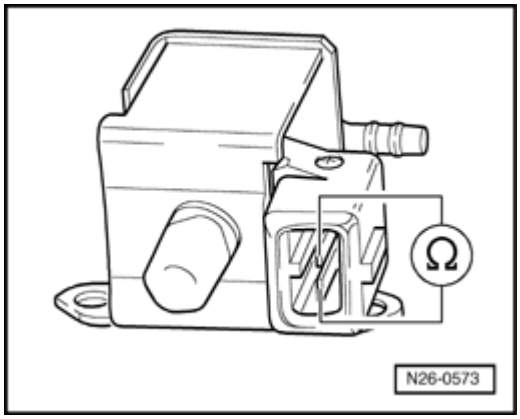

- Measure resistance between terminals of solenoid valve.

  Specified value: 25.0 to 35.0 Ω

If specified value is not obtained:

- Replace Secondary Air Injection (AIR) Solenoid Valve -N112- ⇒ Page 26-14 , item 5 .
- Erase DTC memory of Engine Control Module (ECM) ⇒ Page ST-26 , Diagnostic mode 4: Reset/erase diagnostic data.
- Generate readiness code ⇒ Page ST-52 .

26-22

If specified value is obtained:

- Check wires according to wiring diagram ⇒ Page 26-22 .

Checking wiring

- Connect test box to control module wiring harness ⇒ Page ST-11 , connect test box fo wiring test.

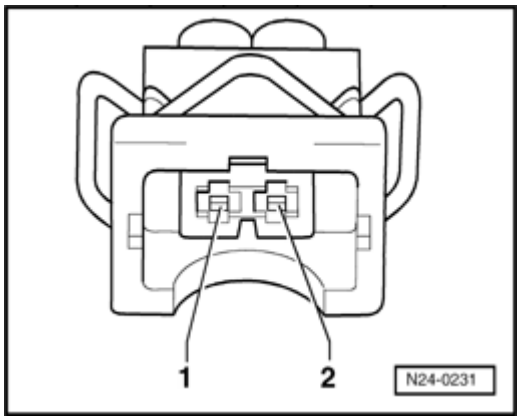

- Check wires between test box and 2-pin connector to Engine Control Module (ECM) f open circuit according to wiring diagram.

  Terminal 2 + socket 50

  Wire resistance: max. 1.5 Ω

- Check the wire for short circuit to B+ and Ground (GND).

  Specified value: ∞ Ω

- Check wire between 2-pin connector termina and the Fuel Pump (FP) Relay -J17- for ope circuit according to wiring diagram.

  Wire resistance: max. 1.5 Ω

If no malfunctions are found in wires:

- Replace Motronic Engine Control Module (E -J220- ⇒ Page 24-105 .

26-23

Secondary Air Injection (AIR) pump motor, checking

Recommended special tools and equipment

- V.A.G1526 Multimeter or V.A.G1715 multimeter
- V.A.G1594 Connector test kit
- Wiring diagram

Test requirements

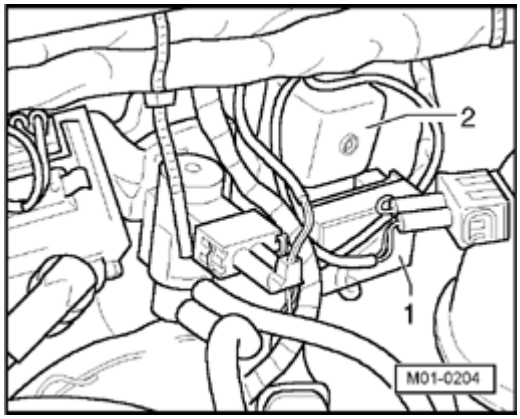

- The respective fuse -1- for Secondary Air Injection (AIR) Pump Relay -J299- must be OK:

⇒ *Electrical Wiring Diagrams, Troubleshooting & Component Locations*

- Secondary Air Injection (AIR) Pump Relay -J299- (-2-) must be OK, check:

⇒ *Electrical Wiring Diagrams, Troubleshooting & Component Locations*

26-24

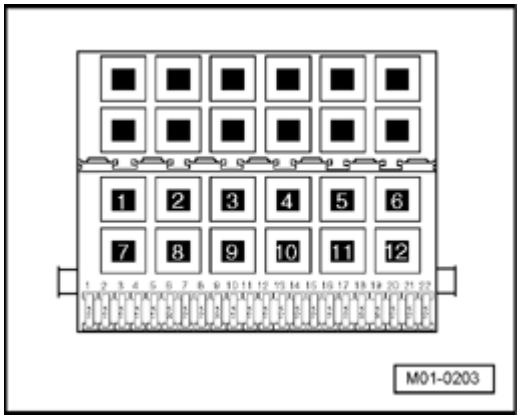

- Fuel Pump (FP) Relay -J17- must be OK, check:

⇒ *Electrical Wiring Diagrams, Troubleshooting & Component Locations*

- All electrical consumers such as lights and rear window defroster must be switched off.
- Battery voltage must be at least 11.5 volts.
- Ground (GND) connections between engine, transmission and chassis must be OK.
- Ignition switched off.

Test sequence

- Remove front noise insulation.
- Disconnect 2-pin connector from Secondary Air Injection (AIR) Pump Motor -V101- ⇒ Page 26-15 , item 12 .
- Disconnect pressure hose at Secondary Air Injection (AIR) pump motor ⇒ Page 26-15 , item 6 .

Note:

To disengage, compress the buttons at the hose coupling.

26-25

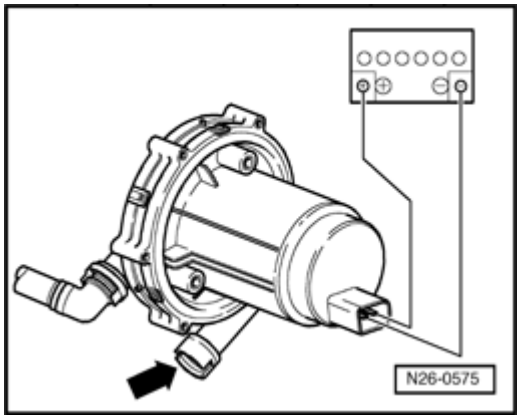

- Connect Secondary Air Injection (AIR) Pump Motor to the B+ and Ground (GND) terminals of the battery using the respective adapter cables.

  The Secondary Air Injection (AIR) Pump Motor must start up and air must escape at compressed-air connection (arrow).

If the motor does not start up, or no air or very little air escapes:

- Disconnect connection between Secondary Air Injection (AIR) Pump Motor and battery.
- Replace Secondary Air Injection (AIR) Pump Motor -V101- ⇒ Page 26-15 , item 12
- Erase DTC memory of Engine Control Module (ECM) ⇒ Page ST-26 , Diagnostic mode 4: Reset/erase diagnostic data.
- Generate readiness code ⇒ Page ST-52 .

If motor starts, and air escapes:

- Disconnect connection between Secondary Air Injection (AIR) Pump Motor and battery.

26-26

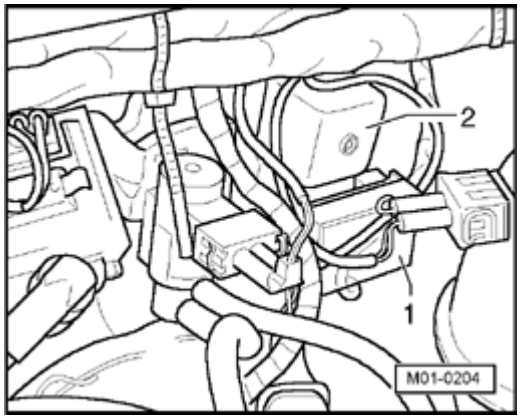

- Remove Secondary Air Injection (AIR) Pump Relay -J299- (-2-) out of relay carrier (in engine compartment on bulkhead)

Notes:

- *Remove battery Ground (GND) strap if tools are necessary for removal of relays or control modules from the relay carrier.*
- *Obtain radio code for radios with anti-theft coding before disconnecting battery.*
- *Do not use metallic tools to pry off relays from relay carrier. The terminals could conduct electricity.*

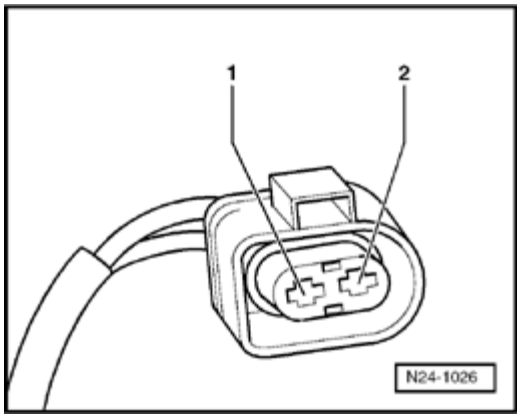

- Check wire between terminal 8 of relay carrier and terminal 2 of 2-pin connector of Secondary Air Injection (AIR) Pump Motor for open circuit according to wiring diagram.

  Wire resistance: max. 1.5 Ω

- Check the wire for short circuit to B+ and Ground (GND).

  Specified value: ∞ Ω

26-27

- Check wire between 2-pin connector terminal 1 and Ground (GND) for open circuit according to wiring diagram.

  Wire resistance: max. 1.5 Ω

If no malfunctions are found in wires:

- Replace Motronic Engine Control Module (ECM) -J220- ⇒ Page 24-105 .

26-28

Combination valve, checking

Recommended special tools and equipment

- V.A.G1390 hand vacuum pump

Test requirements

- No leaks in vacuum lines or hose connections.
- Vacuum hoses not clogged or kinked
- Pressure hose for Secondary Air Injection (AIR) Pump Motor not clogged or kinked

Test sequence

Note:

Do not use pressurized air for the following test!

26-29

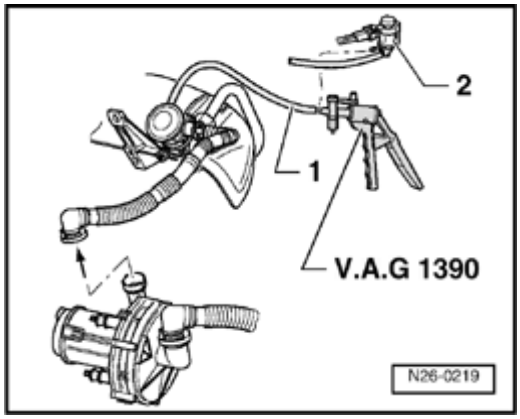

- Disconnect vacuum hose -1- at Secondary Air Injection (AIR) solenoid valve -N112- -2-.
- Connect hand vacuum pump V.A.G1390 at vacuum hose -1- to combination valve.
- Disconnect pressure hose at Secondary Air Injection (AIR) pump motor (arrow) and blow into it with light pressure.

  Combination valve must close.

Note:

To disengage, compress the buttons at the hose coupling.

- Operate vacuum pump.

  Combination valve must open.

If the combination valve does not open or it is constantly open:

- Replace combination valve ⇒ Page 26-14 , item 1 .
- Erase DTC memory of Engine Control Module (ECM) ⇒ Page ST-26 , Diagnostic mode 4: Reset/erase diagnostic data.
- Generate readiness code ⇒ Page ST-52 .

28-1

Ignition, servicing

General notes on ignition system

This section deals specifically with ignition-related components. The other components of the injection and ignition system ⇒ Page 24-1 .

- *For the electric components to work properly, a voltage of at least 11.5 V is required.*
- *The battery must only be disconnected and connected with the ignition switched off, since the Engine Control Module (ECM) can otherwise be damaged.*
- *Engine Control Module (ECM) is equipped with On Board Diagnostic (OBD).*
- *Components marked with * are tested via On Board Diagnostic (OBD) ⇒ Page ST-22 , Diagnostic mode 3: Check DTC memory.*
- *It is possible that the control module will recognize a malfunction and store a DTC during some tests. Therefore the following work steps must be performed in the mentioned sequence after ending all tests and repairs.*

- - Check DTC memory ⇒ Page ST-22 , Diagnostic mode 3: Check DTC Memory,

- - Erase DTC memory ⇒ Page ST-26 , Diagnostic mode 4: Reset/erase diagnostic data

- - For completion, generate readiness code ⇒ Page ST-52 .

Removing and installing ignition components ⇒ Page 28-3 .

Safety precautions ⇒ Page 28-7 .

Test data, spark plugs ⇒ Page 28-9 .

28-3

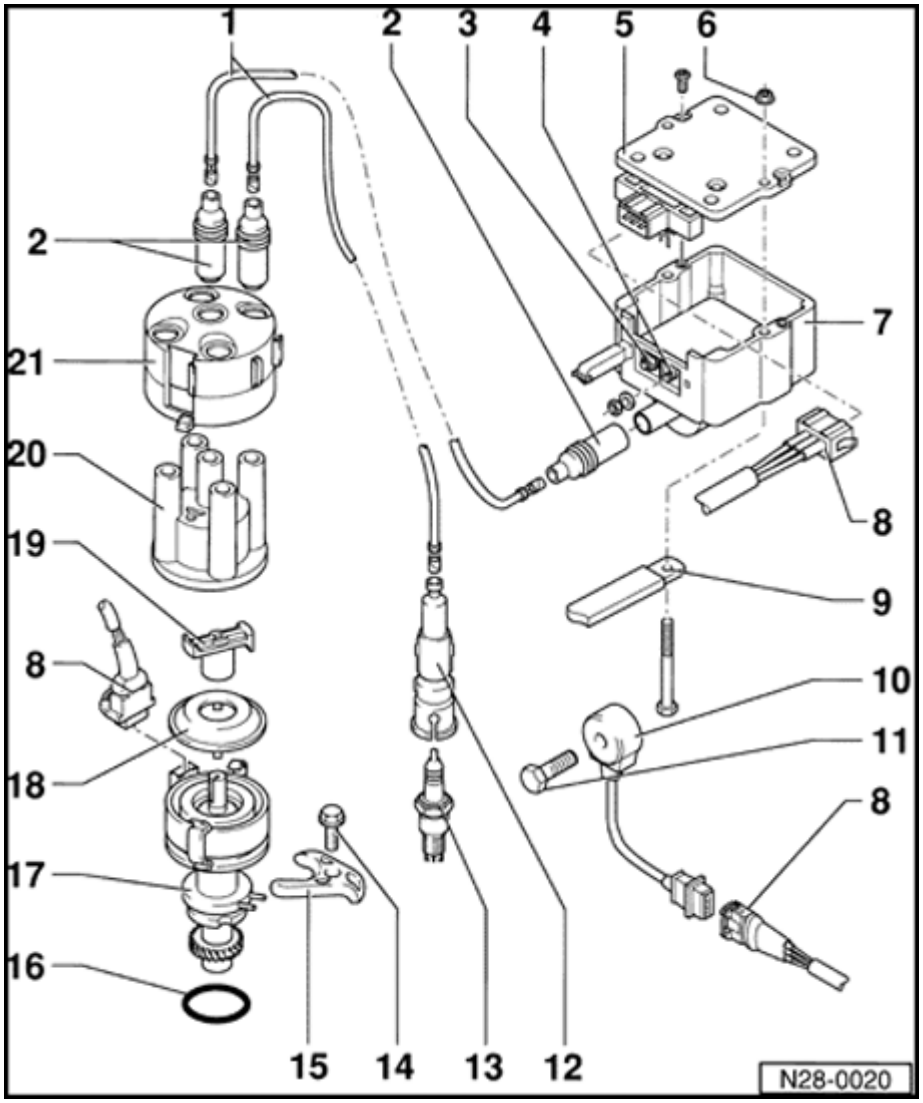

Ignition components, removing and installing

Note:

Motronic Engine Control Module (ECM) -J220- with harness connector ⇒ Page 24-1 , item 4 .*

1 - Ignition wire

- Checking for continuity

2 - Suppressor

- 0.6 to 1.4 kΩ

3 - Terminal 1

4 - Terminal 15

5 - Ignition Coil Power Output Stage - N157-*

- Checking ⇒ Page 28-23

6 - 10 Nm

28-4

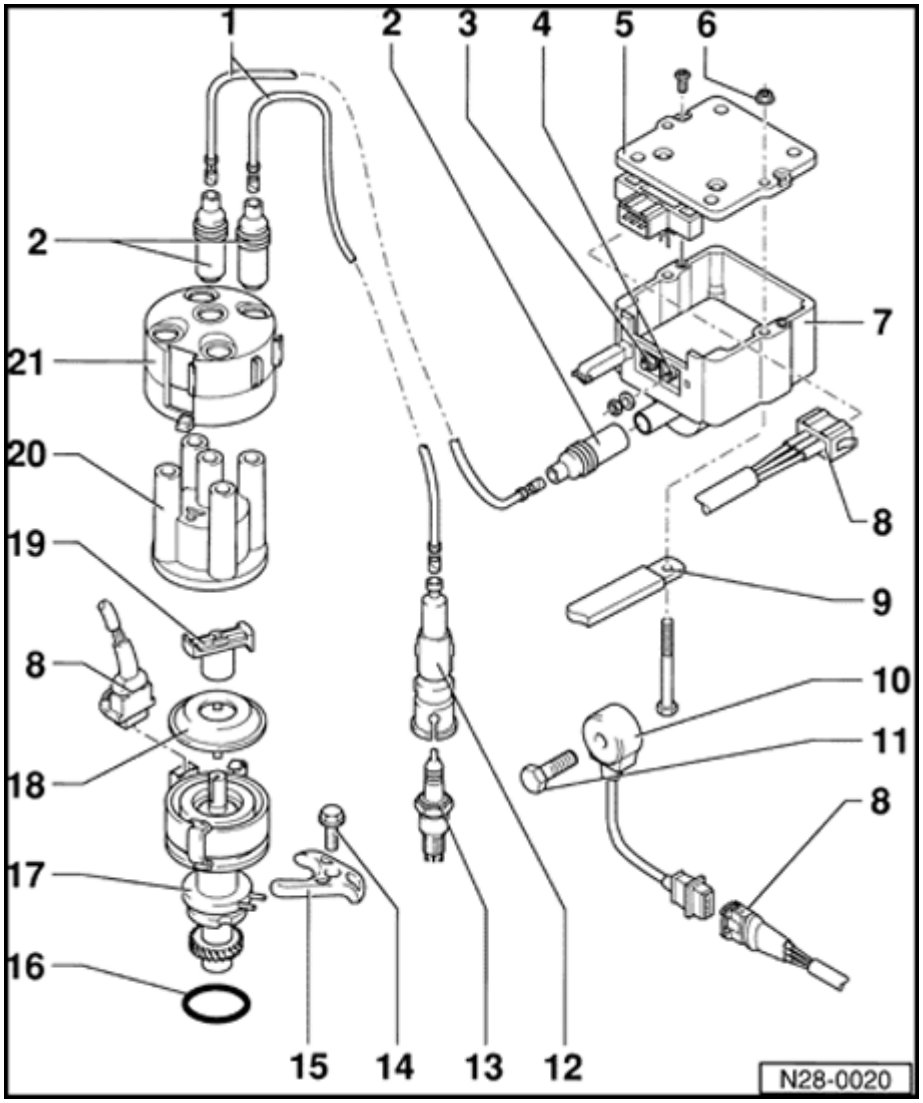

7 - Ignition Coil - N152-

- Component location ⇒ Page 24-2 , item no. 8
  - Checking ⇒ Page 28-23

8 - Connector

- 3-pin
- Terminals are gold-plated

9 - Ground (GND) strap

10 - 11Knock Sensor (KS) 1 - G61-*

- Component location ⇒ Page 24-4 , item no. 18
  - Contact surfaces between knock sensor and cylinder block must be free of corrosion, dirt and grease
  - Checking

⇒ Page 28-20

12 - 20 Nm

- Tightening torque affects function of Knock Sensor (KS)

13 - Spark plug connector

- 4 to 6 kΩ

28-5

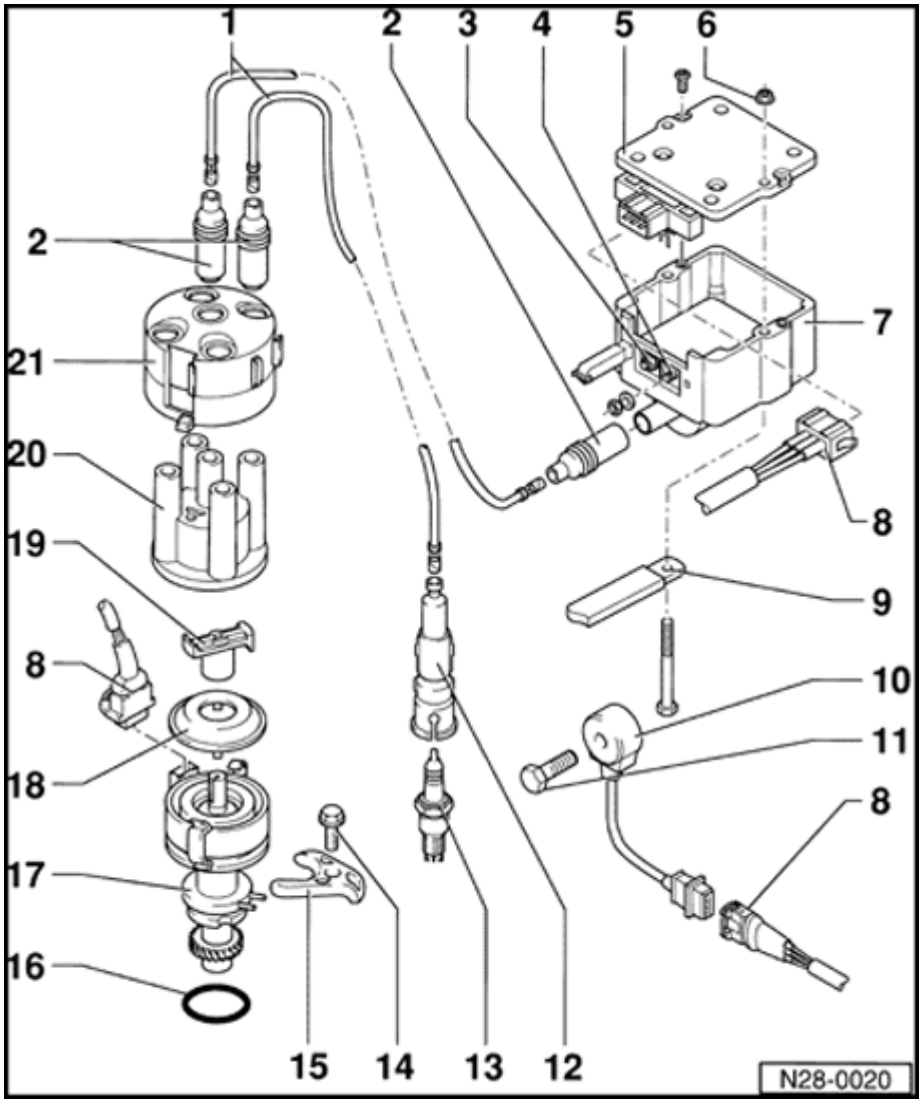

14 - Spark plug, 30 Nm

- Type and spark plug gap ⇒ Page 28-9 , test data, spark plugs

15 - 25 Nm

16 - Clamp

17 - O-ring

- Replace if damaged

18 - Camshaft Position (CMP) Sensor - G40-*

- Removing and installing ⇒ Page 28-10
- Check Camshaft Position (CMP) Sensor - G40- ⇒ Page 28-16

19 - Dust seal cap

20 - Rotor arm

- Identification:

R1

- 0.6 to 1.4 kΩ

28-6

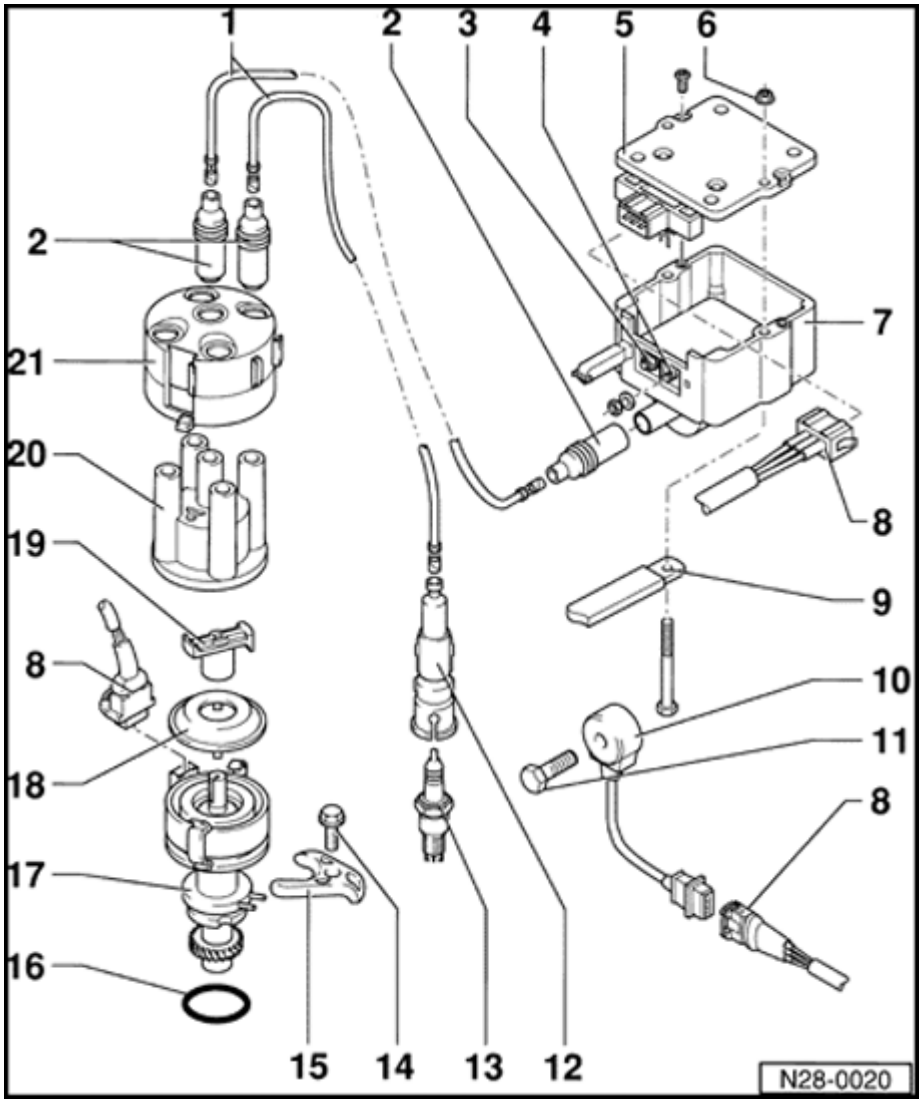

21 - Distributor cap

- Check for cracks and signs of tracking
- Check for contact wear
- Clean before installing
- Check carbon brush for wear and freedom of movement

22 - Protective cap

28-7

Safety precautions

WARNING!

Observe the following for all installations, especially in engine compartment due to lack of room:

- ***Route lines of all types (e.g. for fuel, hydraulic, EVAP canister system, coolant and refrigerant, brake fluid, vacuum) and electrical wiring so that the original path is followed.***
- ***Watch for sufficient clearance to all moving or hot components.***
- ***Fuel system is under pressure! Before opening system, place rags around the connection point. Then release pressure by carefully loosening connection.***

If special testing equipment is required during road test, note the following:

- Test equipment must always be secured to the rear seat and operated from there by a second person.

28-8

If test and measuring equipment is operated from the passenger seat, the person seated there could be injured in the event of an acci involving deployment of the passenger-side airbag.

To reduce the risk of personal injury and/or damage to the fuel injection and ignition systen always observe the following:

- Do not touch or disconnect ignition wires wł engine is running or turning at starting RPM
- Only disconnect and reconnect wires for injection and ignition system, including test leads, when ignition is switched off.
- If engine is to be cranked at starting RPM without starting:

- Disconnect 3-pin connector from ignition coil Page 28-4 , item 8 .

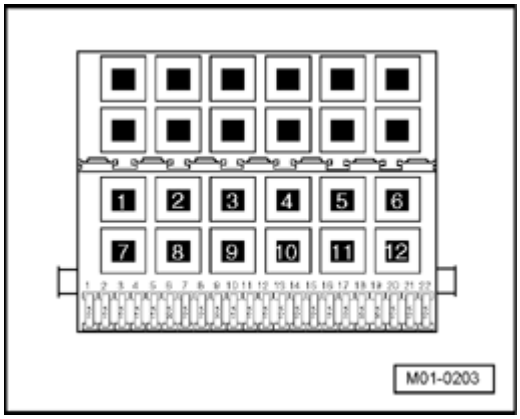

- Remove fuse 18 from fuse holder.

Note:

By removing fuse 18, voltage supply to the fuel injectors is interrupted.

28-9

Test Data, Spark Plugs

Engine Code		ABA
Ignition sequence		1-3-4-2
Spark plugs		
	VW/Audi	101 000 044 AA
	Manufacturer code	FR 8 DS
	Spark plug gap	0.8 mm[1)]
	Tightening torque	30 Nm
Engine Control Module (ECM)[2)]		
	System identification	Motronic M5.9
	Terminals at Engine Control Module (ECM)	68
	Replacement part number	See Parts Catalog
	Engine speed (RPM) limitation	starting at approx. 5800 RPM

1) Gap between Ground (GND) electrode and center electrode insulation

2) Replacing Engine Control Module (ECM) ⇒ Page 24-105

28-10

Ignition distributor, removing and installing

Note:

The Motronic control module requires the no. 1 cylinder TDC signal from the camshaft position sensor to orient the fuel injection and knock sensor systems as per firing order.

Recommended special tools and equipment

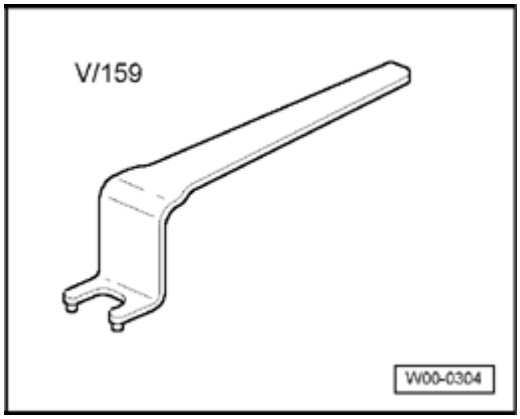

- V159 Pin wrench

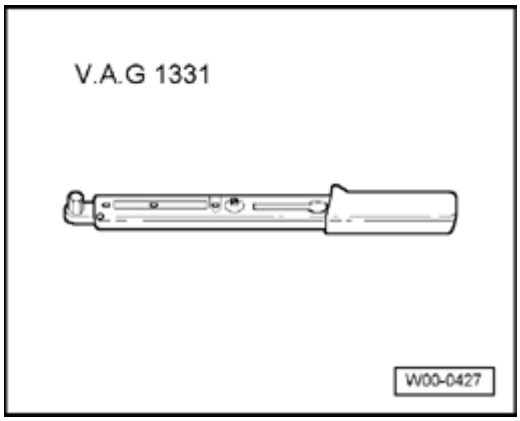

- V.A.G1331 Torque wrench (5 to 50 Nm)

28-11

Removing ignition distributor

Checking markings of TDC cylinder 1:

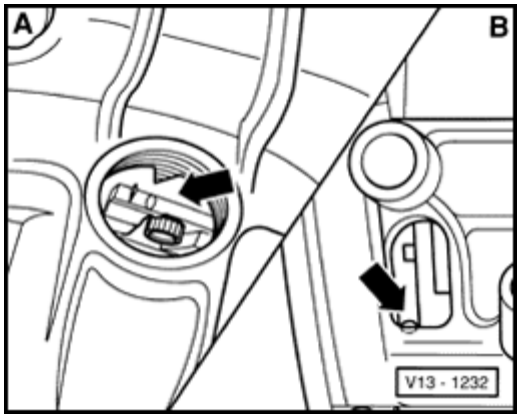

- Set flywheel -A- or drive plate -B- to TDC cylinder 1.

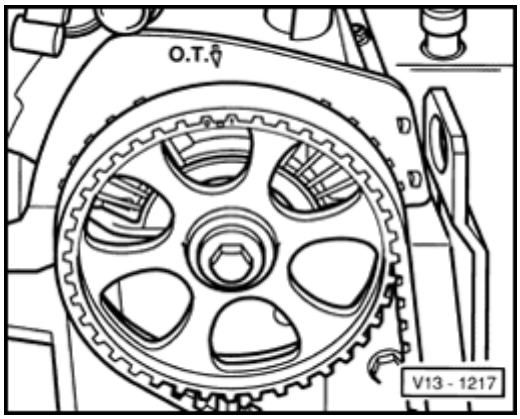

- Mark on camshaft sprocket must align with (arrow) on cylinder head cover.

28-12

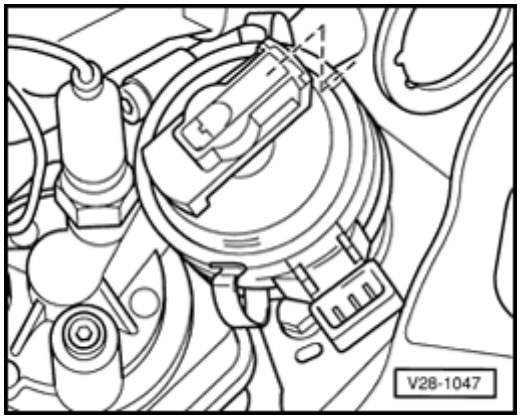

- Mark on distributor must align with mark on rotor arm or camshaft position sensor cover.

- Remove mounting bolt for clamp and remove distributor.

Installing distributor

Requirement

- Crankshaft and camshaft in TDC position cylinder 1.

Procedure

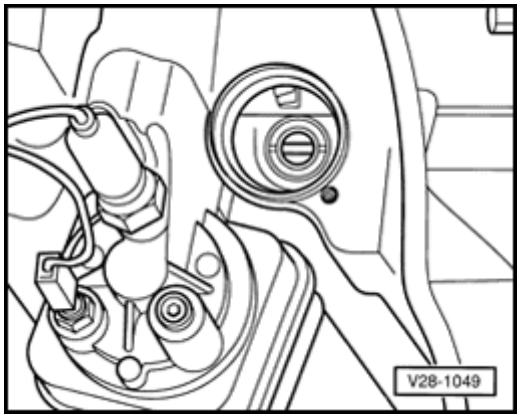

- Before installing distributor align oil pump shaft drive tongue parallel to crankshaft.

28-13

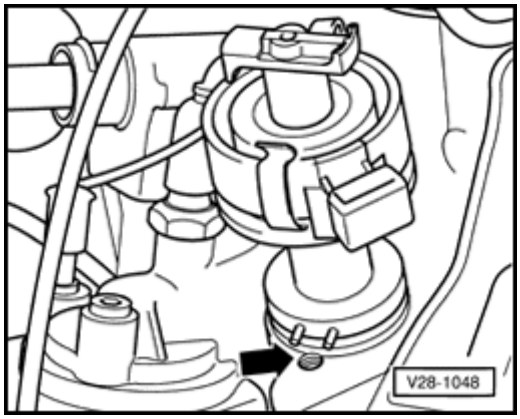

- Install distributor. Pins on distributor must point toward mounting bolt threaded hole (arrow).

Note:

When installing, turn rotor arm slightly right of the distributor marking. When inserting, rotor arm will turn back to the marking.

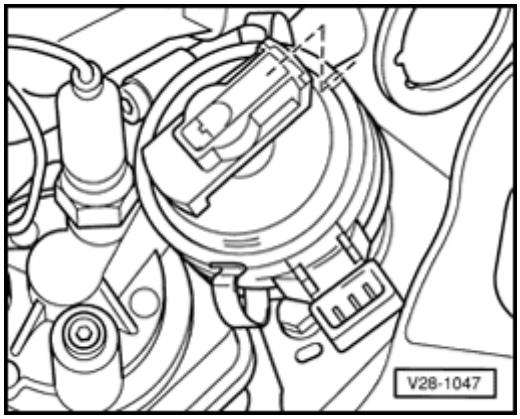

- Mark on distributor must align with mark on rotor arm or camshaft position sensor cover.

- Tighten distributor mounting bolt.

  Tightening torque: 25 Nm

If not able to align markings:

- Loosen belt tensioner and take toothed drive belt off camshaft sprocket.

28-14

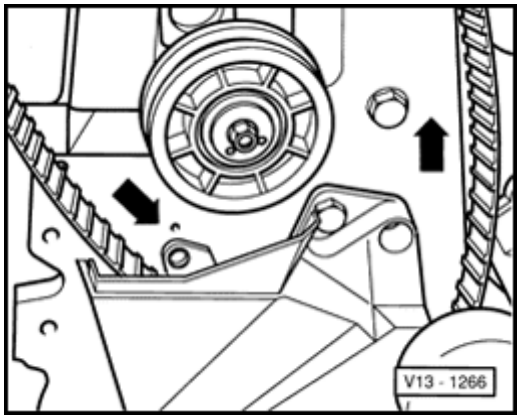

- Turn intermediate shaft sprocket with toothed drive belt in direction shown (arrow), until rotor arm aligns with markings for no. 1 cylinder on distributor housing (toothed drive belt slides over crankshaft sprocket).

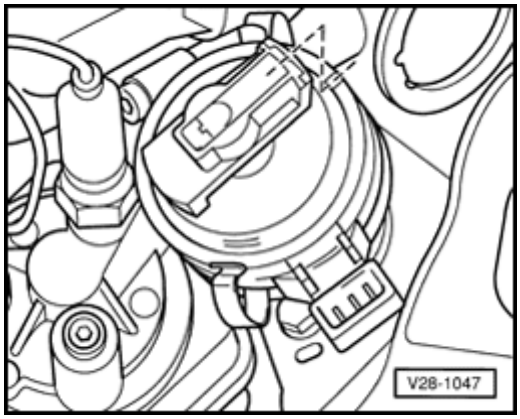

- Mark on distributor must align with mark on rotor arm or camshaft position sensor cover.

- Place toothed drive belt on belt tensioner and camshaft sprocket.

Note:

For easier installation of the toothed drive belt, loosen belt tensioner lock nut only approx. one thread.

28-15

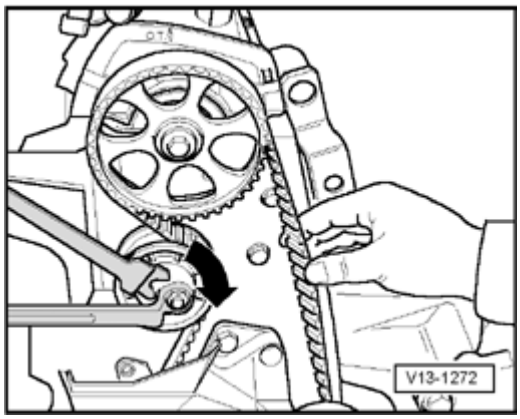

- To tighten toothed drive belt, turn tensioner with pin wrench (e.g. Matra V159) in direction shown (arrow).

Drive belt is correctly tensioned if it can be turned 90° with thumb and forefinger halfway between camshaft and intermediate shaft sprockets.

- Tighten tensioner lock nut.

  Tightening torque: 45 Nm

- Rotate crankshaft two full turns and check adjustment.
- Check distributor housing and rotor arm markings.
- Install upper toothed belt protective cover.
- Before installing, clean distributor cap and check for cracks and signs of carbon tracking, replace if necessary.

28-16

Camshaft Position (CMP) sensor, checking

Recommended special tools and equipment

- V.A.G1526 Multimeter
- V.A.G1594 Connector test kit
- V.A.G1527 Voltage test lamp

Test requirements

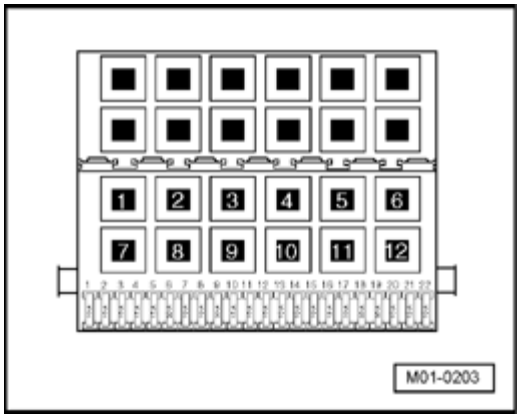

- The respective fuses of Motronic Engine Control Module (ECM) -J220- must be OK:

⇒ *Electrical Wiring Diagrams, Troubleshooting & Component Locations*

- Battery voltage must be at least 11.5 volts.
- All electrical consumers such as lights and rear window defroster must be switched off.
- Parking brake must be engaged or else daylight driving lights will be switched on.
- For vehicles with automatic transmission, selector lever must be in -P-.

- Ground (GND) connections between engin transmission, and chassis must be OK.

- Ignition switched off.

Checking voltage supply

- Disconnect 3-pin connector for Camshaft Position (CMP) Sensor -G40- on distributor.

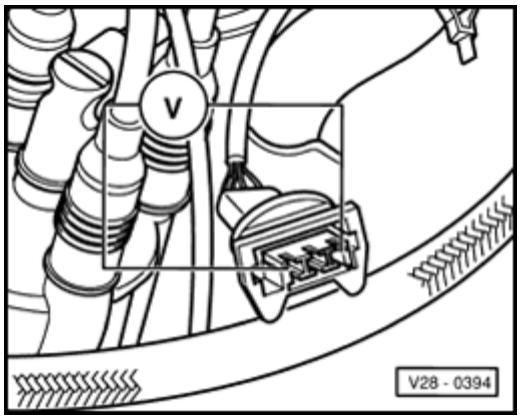

- Connect multimeter to outer terminals of the disconnected connector for Camshaft Positic (CMP) sensor for voltage measurement.
- Switch ignition on.

  Specified value: at least 9.0 V
- Switch ignition off.

If there is no voltage:

- Check wires according to wiring diagram ⇒ Page 28-18 .

28-18

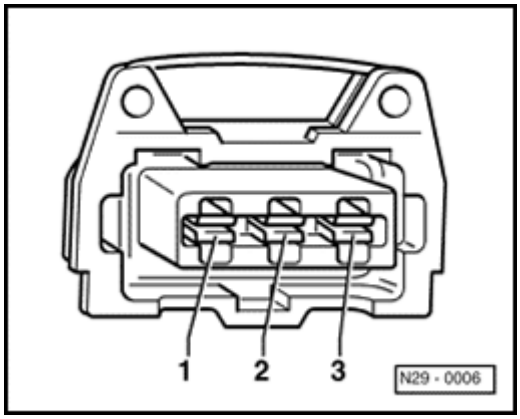

Checking wiring

- Connect test box to control module wiring harness ⇒ Page ST-11 , connect test box fo wiring test.

- Check wires between test box and 3-pin connector to Engine Control Module (ECM) f open circuit according to wiring diagram.

  Terminal 1 + socket 56

  Terminal 2 + socket 44

  Wire resistance: max. 1.5 Ω

- Check wire between 3-pin connector termina and relay carrier -G1/4- for open circuit according to wiring diagram.

  Wire resistance: max. 1.5 Ω

- Check wires for short circuit to each other.

  Specified value: ∞ Ω

28-19

If no malfunctions are found in the wires and there was voltage between outer terminals:

- Replace distributor with Camshaft Position (CMP) Sensor -G40- ⇒ Page 28-10 , removing and installing distributor.

- Erase DTC memory of Engine Control Module (ECM) ⇒ Page ST-26 , Diagnostic mode 4: Reset/erase diagnostic data.

- Generate readiness code ⇒ Page ST-52 .

If no malfunctions are found in the wires and there was no voltage between outer terminals:

- Replace Motronic Engine Control Module (ECM) -J220- ⇒ Page 24-105 .

28-20

Knock sensors, checking

Note:

- *Contact surfaces between knock sensor and cylinder block must be free of corrosion, dirt and grease.*
- *For the Knock Sensors to function properly, it is important for tightening torque to be exactly 20 Nm.*
- *Use only gold-plated terminals when servicing terminals in harness connector of knock sensors.*

Recommended special tools and equipment

- V.A.G1526 Multimeter or V.A.G1715 multimeter
- V.A.G1594 Connector test kit
- Wiring diagram

28-21

Test requirements

- Knock sensor securing bolt tightened to 20 Nm.
- Ignition switched off.

Checking resistance

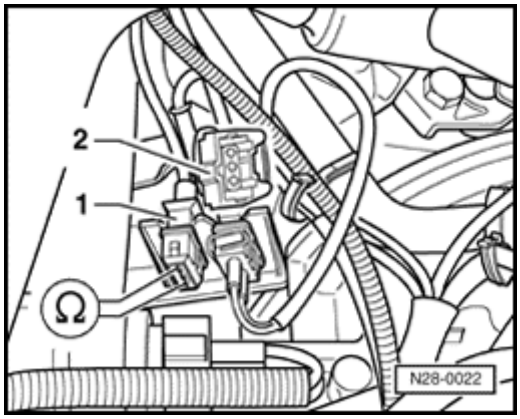

- Disconnect the 3-pin harness connector -2- for Knock Sensor (KS) 1 -G61- (-1-).
- Measure resistance between terminals 1 + 2, 1 + 3 and 2 + 3 on connector to knock sensor.

  Specified value: ∞ Ω

If specified value is not obtained:

- Replace Knock Sensor (KS) 1 -G61- ⇒ Page 28-4 , item 10 .
- Erase DTC memory of Engine Control Module (ECM) ⇒ Page ST-26 , Diagnostic mode 4: Reset/erase diagnostic data.
- Generate readiness code ⇒ Page ST-52 .

If specified value is obtained:

- Check wires according to wiring diagram ⇒ Page 28-22 .

28-22

Checking wiring

- Connect test box to control module wiring harness ⇒ Page ST-11 , connect test box fo wiring test.

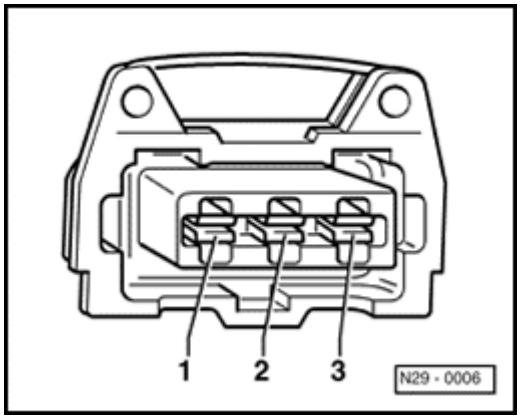

- Check wires between test box and 3-pin connector to Engine Control Module (ECM) f open circuit according to wiring diagram.

  Terminal 1 + socket 34

  Terminal 2 + socket 33

  Terminal 3 + socket 56

  Wire resistance: max. 1.5 Ω

- Check wires for short circuit to each other.

  Specified value: ∞ Ω

If no malfunctions are detected in the wires anc resistance values were OK:

- Replace Knock Sensor (KS) 1 -G61- ⇒ Pag 28-4 , item 10 .
- Erase DTC memory of Engine Control Modu (ECM) ⇒ Page ST-26 , Diagnostic mode 4: Reset/erase diagnostic data.
- Generate readiness code ⇒ Page ST-52 .

28-23

Ignition coil, checking

Recommended special tools and equipmen

- V.A.G1526 Multimeter
- V.A.G1594 Connector test kit

Test sequence

- Disconnect 3-pin connector at ignition coil ⇒ Page 28-4 , item 8 .
- Disconnect 3-pin interference suppression connector at ignition coil ⇒ Page 28-3 , item

Checking resistances

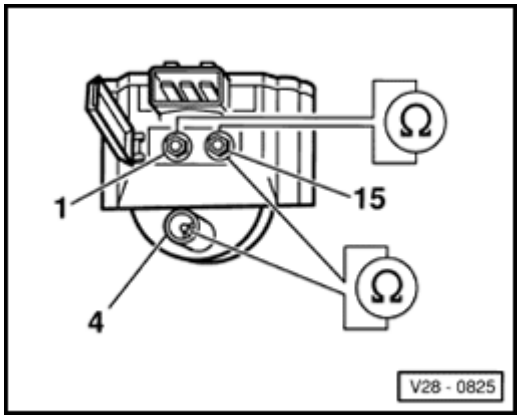

- Measure primary resistance between termina + 15.

  Specified value: 0.5 to 1.2 Ω
- Measure secondary resistance between terminals 4 + 15.

  Specified value: 3.0 to 4.0 k Ω

If specified values are not obtained:

- Remove ignition coil and Ignition Coil Power Output Stage -N157- ⇒ Page 28-3 , item 5 .

28-24

- Repeat test.

If specified values are not obtained again:

- Replace Ignition Coil -N152- ⇒ Page 28-4 , item 7 .

- Erase DTC memory of Engine Control Module (ECM) ⇒ Page ST-26 , Diagnostic mode 4: Reset/erase diagnostic data.

- Generate readiness code ⇒ Page ST-52 .

If specified values are obtained:

- Check ignition coil power output stage ⇒ Page 28-25 .

28-25

End stage for ignition coil, checking

Recommended special tools and equipment

- V.A.G1526 Multimeter
- V.A.G1594 Connector test kit
- V.A.G1527 Voltage test lamp
- Wiring diagram

28-26

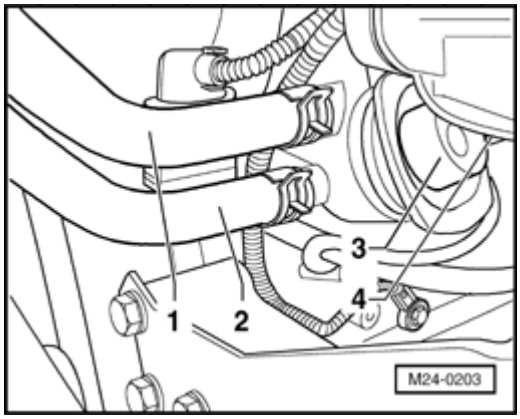

Test requirements

- The respective fuses of Ignition Coil -N152- must be OK:

⇒ *Electrical Wiring Diagrams, Troubleshooting & Component Locations*

- Battery voltage must be at least 11.5 volts.
- Ground (GND) connections between engine, transmission, and chassis must be OK.
- All electrical consumers such as lights and rear window defroster must be switched off.
- Parking brake must be engaged or else daylight driving lights will be switched on.
- For vehicles with automatic transmission, selector lever must be in -P-.
- If vehicle is equipped with an A/C system, it must be switched off.
- Engine speed (RPM) sensor must be OK, checking ⇒ Page 24-61 .
- Camshaft Position (CMP) sensor must be OK, checking ⇒ Page 28-16 .
- Ignition switched off.

28-27

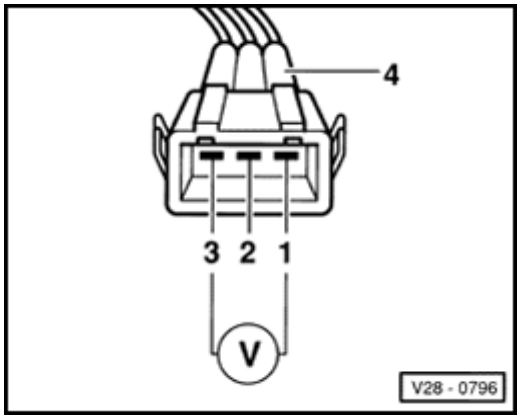

Test sequence

- Disconnect 3-pin connector from ignition coil Page 28-4 , item 8 .

Checking voltage supply

- Measure voltage supply between terminals 1 of disconnected connector -4-.
- Switch ignition on.

  Specified value: at least 11.5 V
- Switch ignition off.

If there is no voltage:

- Check wire between 3-pin connector termina and Ground (GND) for open circuit according wiring diagram.

  Wire resistance: max. 1.5 Ω
- Check wire between 3-pin connector termina and relay carrier -G1/4- for open circuit according to wiring diagram.

  Wire resistance: max. 1.5 Ω

If there is no malfunction in voltage supply:

- Check activation ⇒ Page 28-28 .

28-28

Checking activation

WARNING!

Do not touch ignition coil connecting parts or adapter cables during the following test.

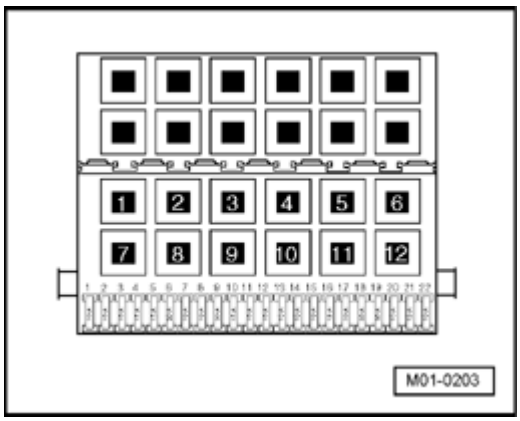

- Remove fuse 18 from fuse holder.

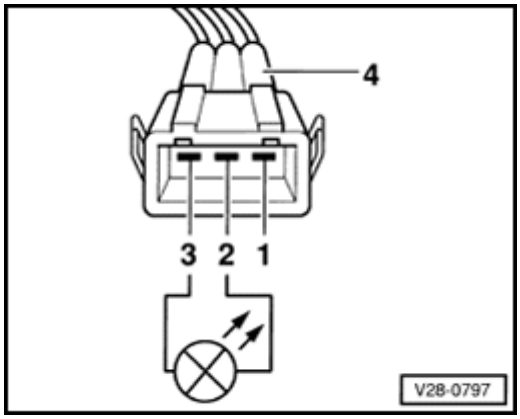

- Connect diode test lamp to terminals 2 + 3.
- Operate starter and test ignition signal from Engine Control Module (ECM).

  LED should flicker.

If LED flickers and voltage supply is OK:

- Replace Ignition Coil Power Output Stage -N157- ⇒ Page 28-3 , item 5 .

28-29

- Erase DTC memory of Engine Control Modu (ECM) ⇒ Page ST-26 , Diagnostic mode 4: Reset/erase diagnostic data.

- Generate readiness code ⇒ Page ST-52 .

If LED does not flicker:

- Check wires according to wiring diagram ⇒ Page 28-29 .

Checking wiring

- Connect test box to control module wiring harness ⇒ Page ST-11 , connect test box fo wiring test.

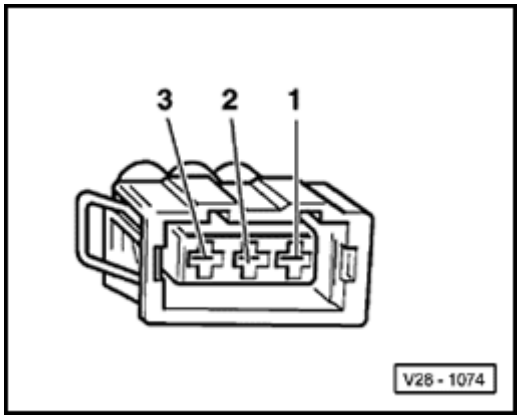

- Check wire between test box and 3-pin connector to Engine Control Module (ECM) f open circuit according to wiring diagram.

  Terminal 2 + socket 8

  Wire resistance: max. 1.5 Ω

- Check wires for short circuit to B+ or Ground (GND).

  Specified value: ∞ Ω

If no malfunctions are found in wires:

- Replace Motronic Engine Control Module (E -J220- ⇒ Page 24-105 .

37-1

Selector lever mechanism, servicing

Safety precautions

WARNING!

Observe the following for all installations, especially in engine compartment due to lack of room:

- ***Route lines of all types (e.g. for fuel, hydraulic, EVAP canister system, coolant and refrigerant, brake fluid, vacuum) and electrical wiring so that the original path is followed.***
- ***Watch for sufficient clearance to all moving or hot components.***
- ***Shift selector lever into position -P- and engage parking brake before working with the engine running.***

If special testing equipment is required during road test, note the following:

- Test equipment must always be secured to the rear seat and operated from there by a second person.

37-2

If test and measuring equipment is operated from the passenger seat, the person seated there could be injured in the event of an accident involving deployment of the passenger-side airbag.

Note:

- *For the electric components to work properly, a voltage of at least 11.5 V is required.*
- *Transmission Control Module (TCM) is equipped with On Board Diagnostic (OBD).*
- *It is possible that the control module will recognize a malfunction and store a DTC during some tests. Therefore the following work steps must be performed in the mentioned sequence after ending all tests and repairs.*

  - - Check DTC memory ⇒ Page ST-22 , Diagnostic mode 3: Check DTC Memory,

  - - Erase DTC memory ⇒ Page ST-26 , Diagnostic mode 4: Reset/erase diagnostic data

  - - For completion, generate readiness code ⇒ Page ST-52 .

37-3

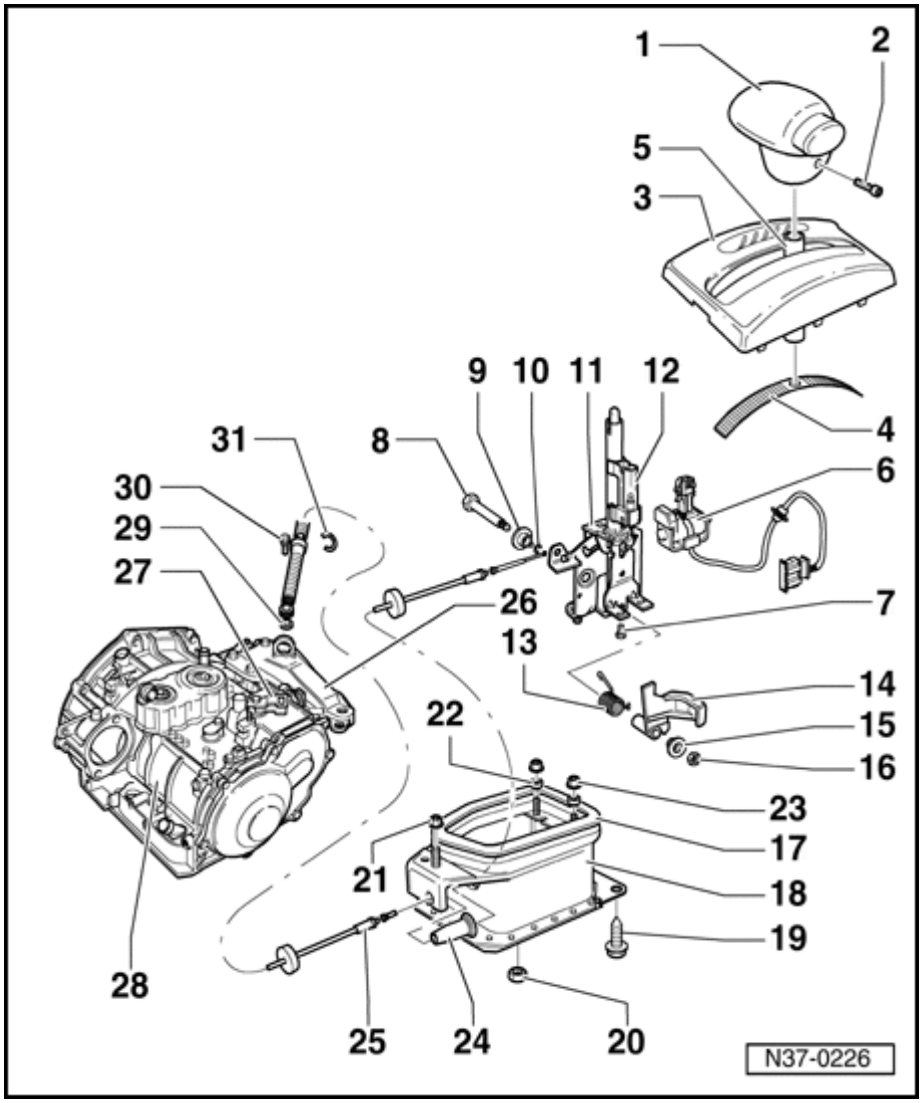

Selector lever mechanism, (vehicles without ignition key removal lock), disassembling and assembling

1 - Selector lever handle

2 - Set screw, 1.5 Nm

3 - Cover

- With selector scale

4 - Cover strip

- Inserted in cover ⇒ item 3

5 - Protective sleeve for selector lever

6 - Shift lock solenoid - N110-

- Adjusting ⇒ Fig. 3
- Function test ⇒ Fig. 4
- Securing wiring harness

to
selector
housing
⇒ Fig. 6

37-4

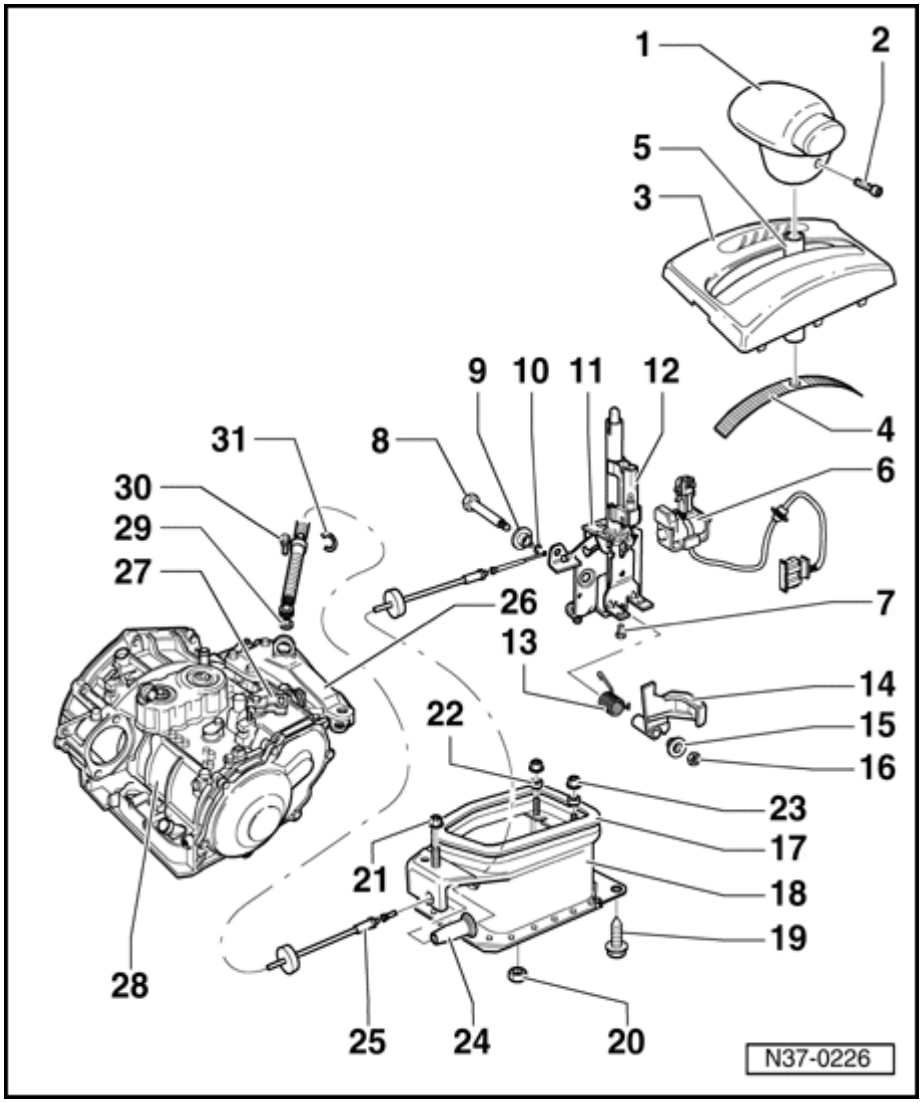

7 - Bolt, 3 Nm

- Qty. 2
- Insert with locking fluid (AMV 185 101 A1)

8 - Collar bolt

- Grease on shank

9 - Socket

10 - Locking washer

- Installing ⇒ Fig. 5

11 - Selector lever

- To remove selector lever, lower shielding plate is removed, front shielding plate is removed and slid toward front.
- Assembling before installation ⇒ Fig. 2

12 - Indicator

lighting

- Securing connector for indicator lighting ⇒ Fig. 7

37-5

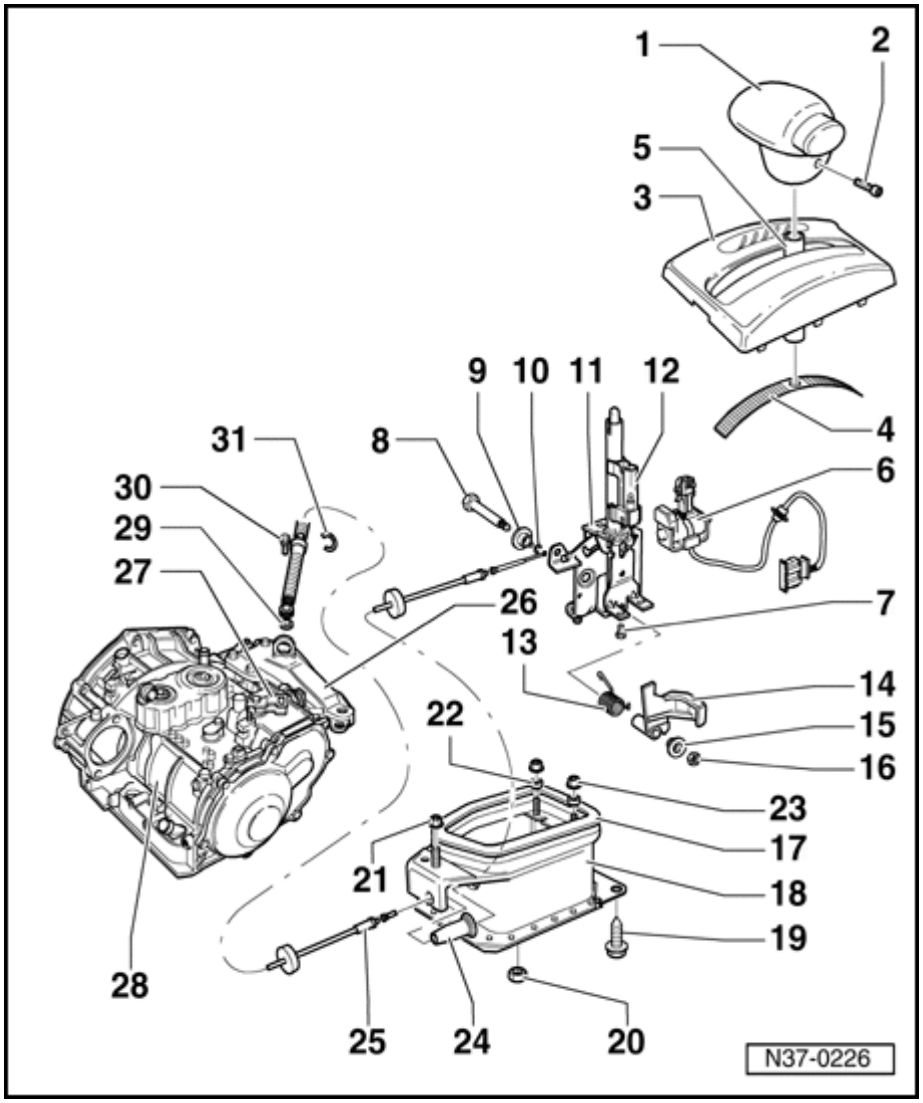

13 - Spring

- Insert into selector lever together with lever ⇒ item 14

14 - Lever

- For locking in selector lever position "P" or "N"

15 - Socket

16 - Nut, 10 Nm

- Always replace

17 - Gasket

18 - Selector housing

- Does not need to be removed to replace selector lever cable or individual shift mechanism parts

- Removing ⇒ Fig. 1

37-6

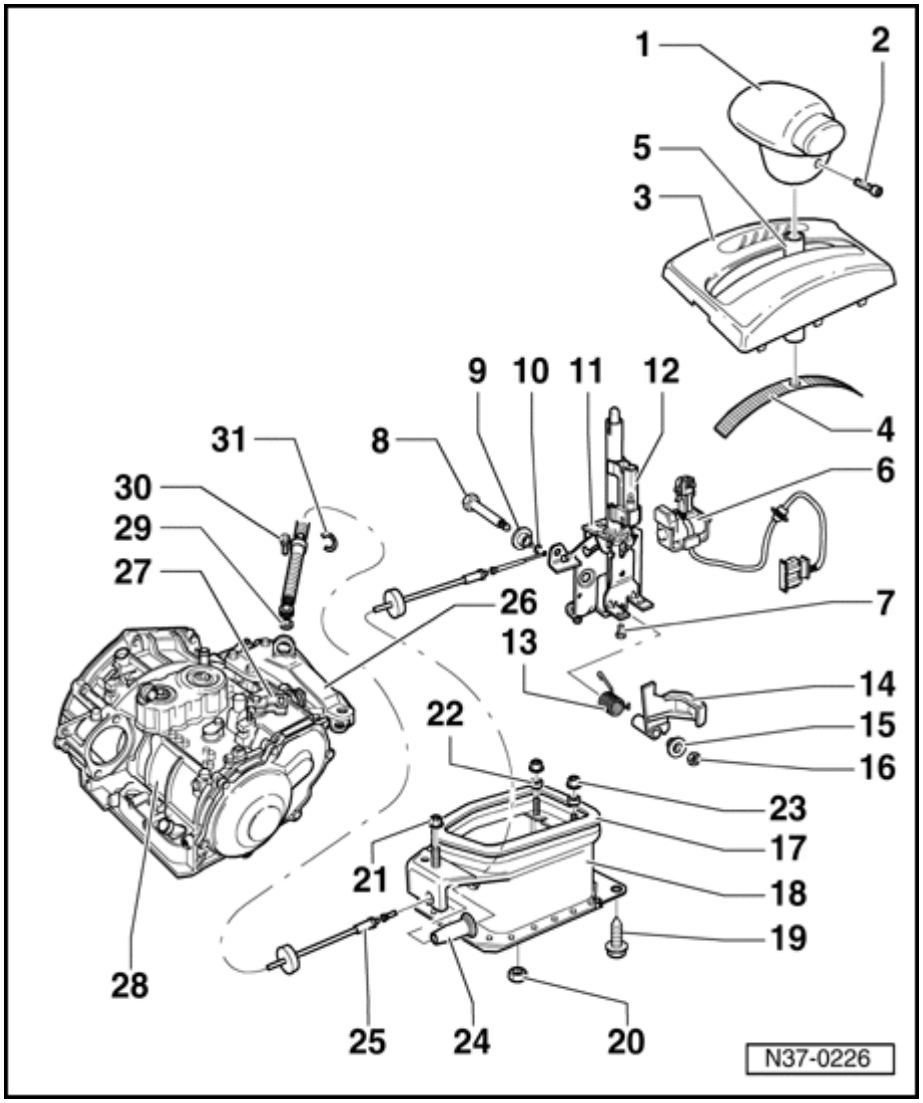

19 - Bolt with collar, 25 Nm

20 - Nut, 15 Nm

- Qty. 3
- Always replace

21 - Hex nut, tighten to 25 Nm.

- With collar

22 - Spacers

23 - Nuts

- For mounting center console

24 - Protective sleeve

- Insert into selector housing before installing selector lever cable ⇒ Fig. 8

37-7

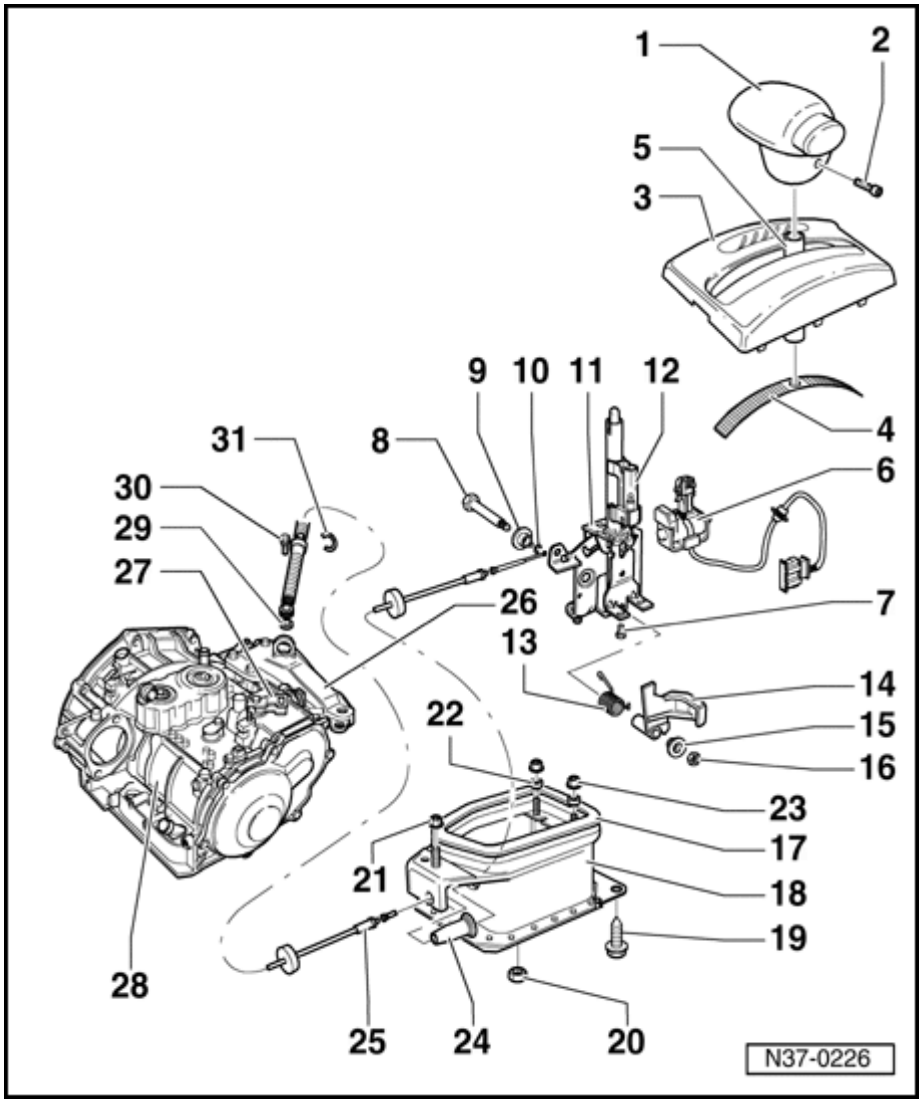

25 - Selector lever cable

- Do not bend or kink
- Lightly grease cable eyelet and cable ends before installing
- To remove selector lever cable, lower protective plate is removed, exhaust system is separated before catalytic converter and front protective plate is removed.

- Remove clipped cable out of mounting bracket of transmission ⇒ Fig. 9
- Tighten selector lever

cable to mounting bracket for selector housing to 20 Nm.

- Check guide tube for proper seating
- Check protective sleeve between console and lever/shift rod for proper seating and secure selector lever cable with corrugated locking element
- Securing selector lever cable to selector lever ⇒ Fig. 5
- Adjusting ⇒ Page 37-36

37-8

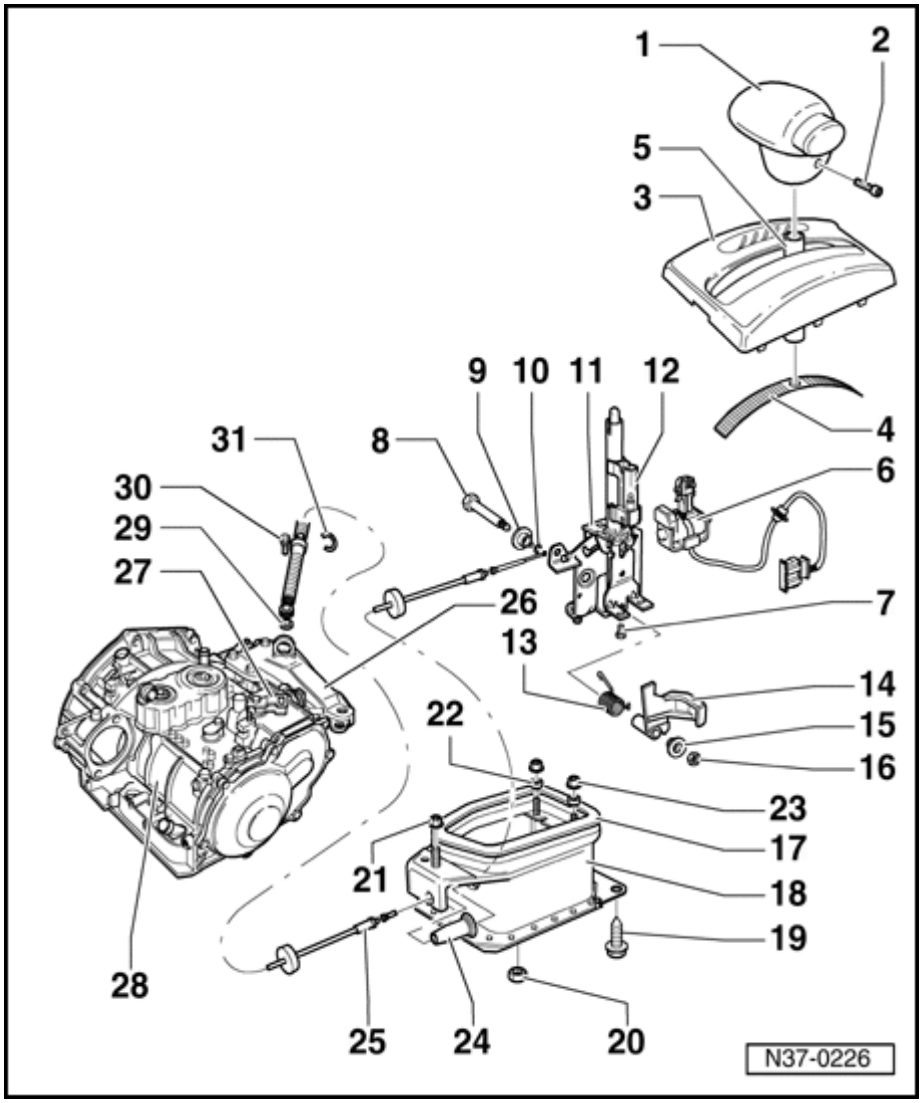

26 - Console

- With bracket for selector lever cable

27 - Lever

- For selector shaft

28 - Transmission

29 - Washer

30 - Bolt with collar, 25 Nm

31 - Corrugated locking element

- For selector lever cable
- Always replace

37-9

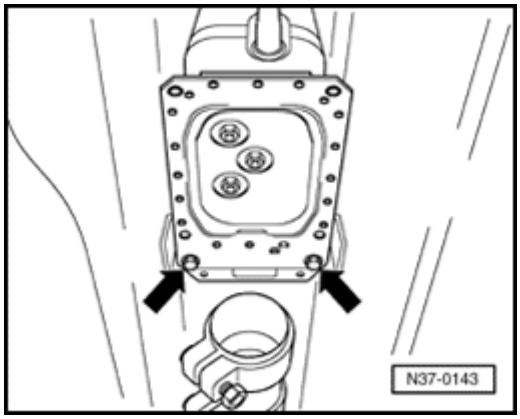

Fig. 1 Removing selector housing

Procedure

- Remove rear center console.
- Remove hex nut with collar.
- Remove lower shielding plate.
- Disconnect harness connectors to oxygen sensors, detach exhaust system at front catalytic converter.
- Remove front protective plate and remove rear bolts (arrows).

37-10

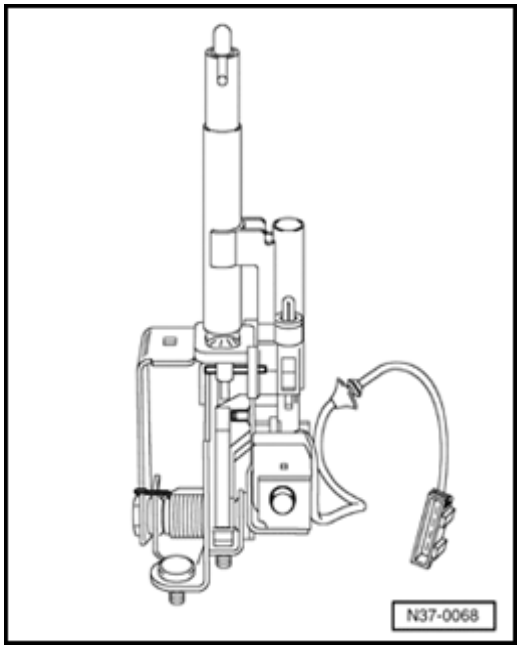

Fig. 2 Assembling selector lever before installing

Before installing selector lever in selector housing, Shift Lock Solenoid -N110- is adjusted ⇒ Fig. 3 and function test performed ⇒ Fig. 4 .

Procedure

- Install set screw and bolts for Shift Lock Solenoid -N110- with locking fluid (AMV 185 101 A1).

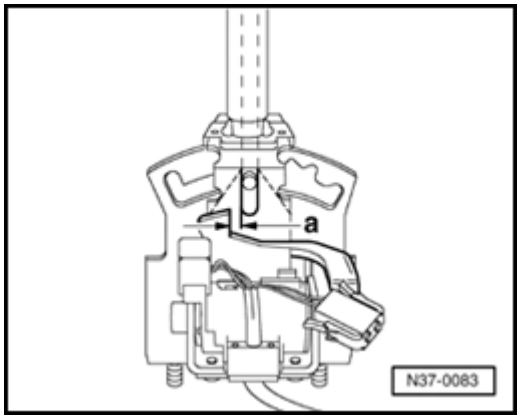

Fig. 3 Adjusting Shift lock solenoid -N110-

Procedure

- Insert solenoid into long holes by sliding so that a play -a- of 0.3 mm is created between pressure rod and lever ⇒ Fig. 4 .

37-11

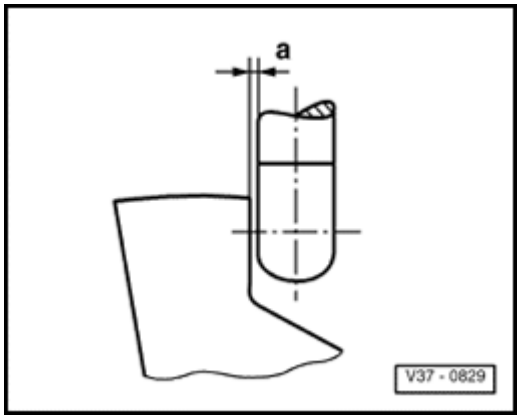

Fig. 4 Adjusting play between pressure rod and lever

Dimension a + 0.3 mm

Function test

1 - Place selector lever to "P" and supply solenoid with 12 V. Selector lever must not be engaged in any driving modes.

- Interrupt solenoid function, all driving modes must be able to be selected.

- Pressure rod must not hook on lever.

2 - Set selector lever to "N" and check as for 1.

- Adjust according to play, install selector lever completely.

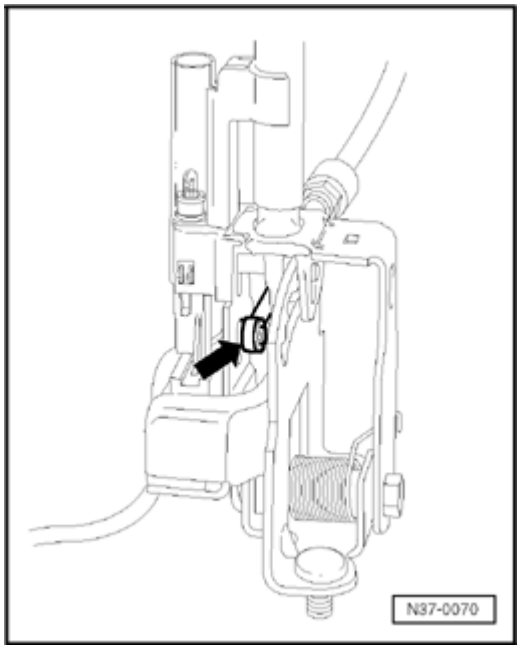

Fig. 5 Securing selector lever cable to selector lever

Procedure

- Place eyelet of selector lever cable (arrow) onto selector lever and secure with locking washer.

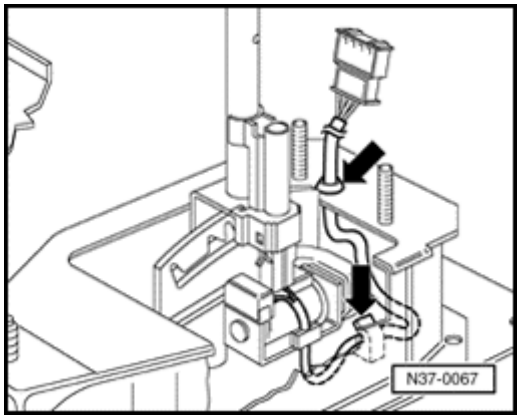

Fig. 6 Securing wiring harness to selector housing

Procedure

- Press wiring harness into clips and into selector housing (arrows).

37-13

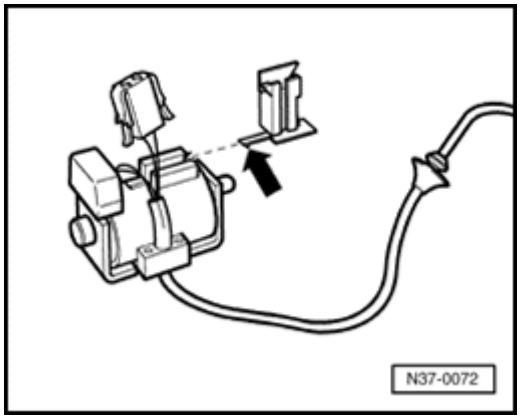

Fig. 7 Securing connector for indicator lighting

Procedure

- Slide retainer with tab (arrow) far enough until tab engages.
- Place connector wire into retainer and slide connector into retainer.

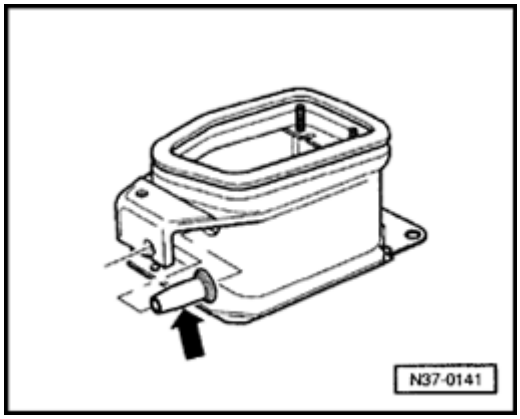

Fig. 8 Installing grommet into selector housing

Procedure

- Insert protective sleeve (arrow) before installing selector lever cable.

37-14

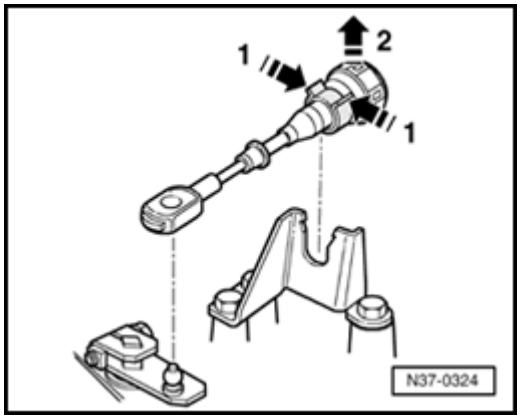

Fig. 9 Remove clipped selector lever cable out of bracket

Procedure

- First disengage selector lever cable -1-, then remove from bracket -2-.

37-15

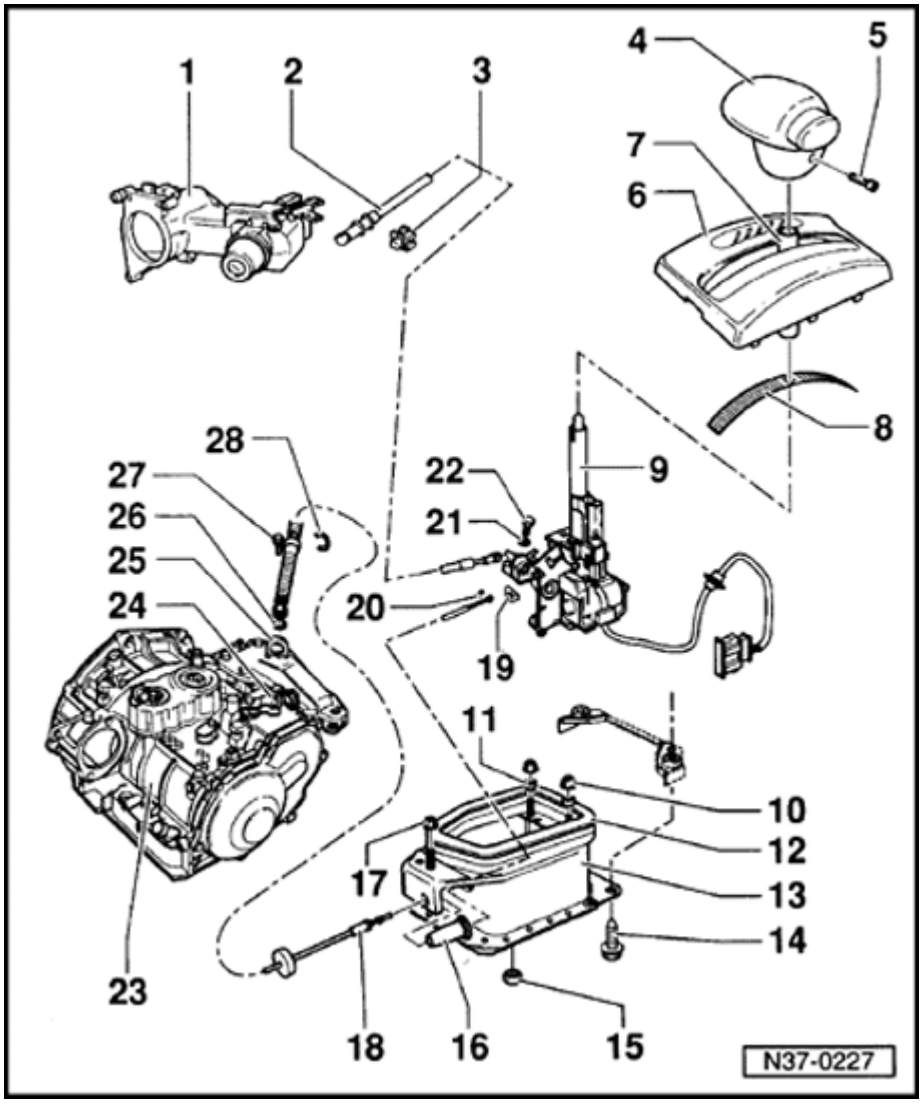

Selector lever mechanism, (vehicles with ignition key removal lock), disassembling and assembling

1 Ignition/Starter - Switch

2 - Locking cable

- Must not be kinked
- Adjusting ⇒ Page 37-35
- Removing and installing ⇒ Page 37-31

3 - Clip

- For securing locking cable
- Always replace

4 - Selector lever handle

5 - Set screw, 1.5 Nm

6 - Cover

- With selector

scale

37-16

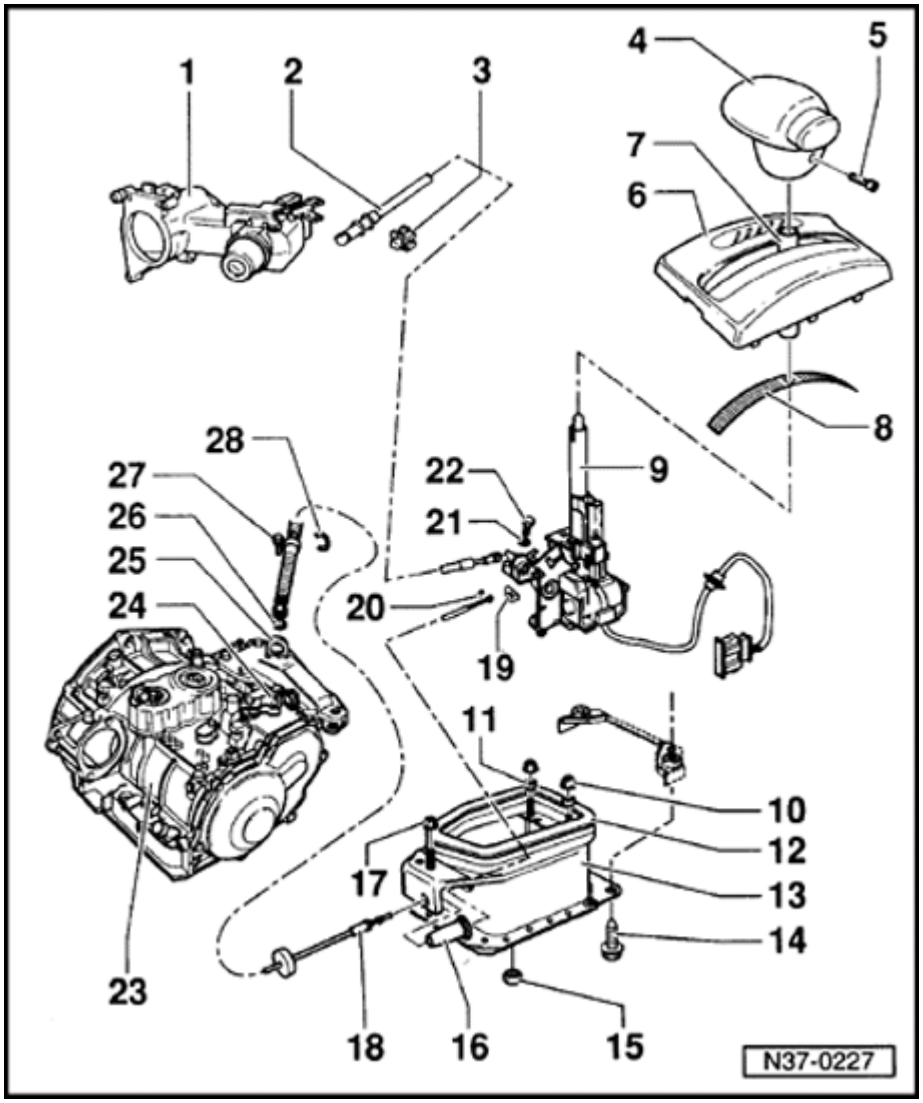

7 - Protective sleeve for selector lever

8 - Cover strip

- Inserted in cover ⇒ item 6

9 - Selector lever

- Disassembling and assembling ⇒ Page 37-24
  - To remove selector lever, remove lower protective plate, front protective plate is removed and slid toward front.
  - When installing selector lever, place locking cable bracket into selector housing cutout.
  - Securing

wiring harness to selector housing ⇒ Fig. 2

10 - Nuts

- For mounting center console

11 - Spacers

37-17

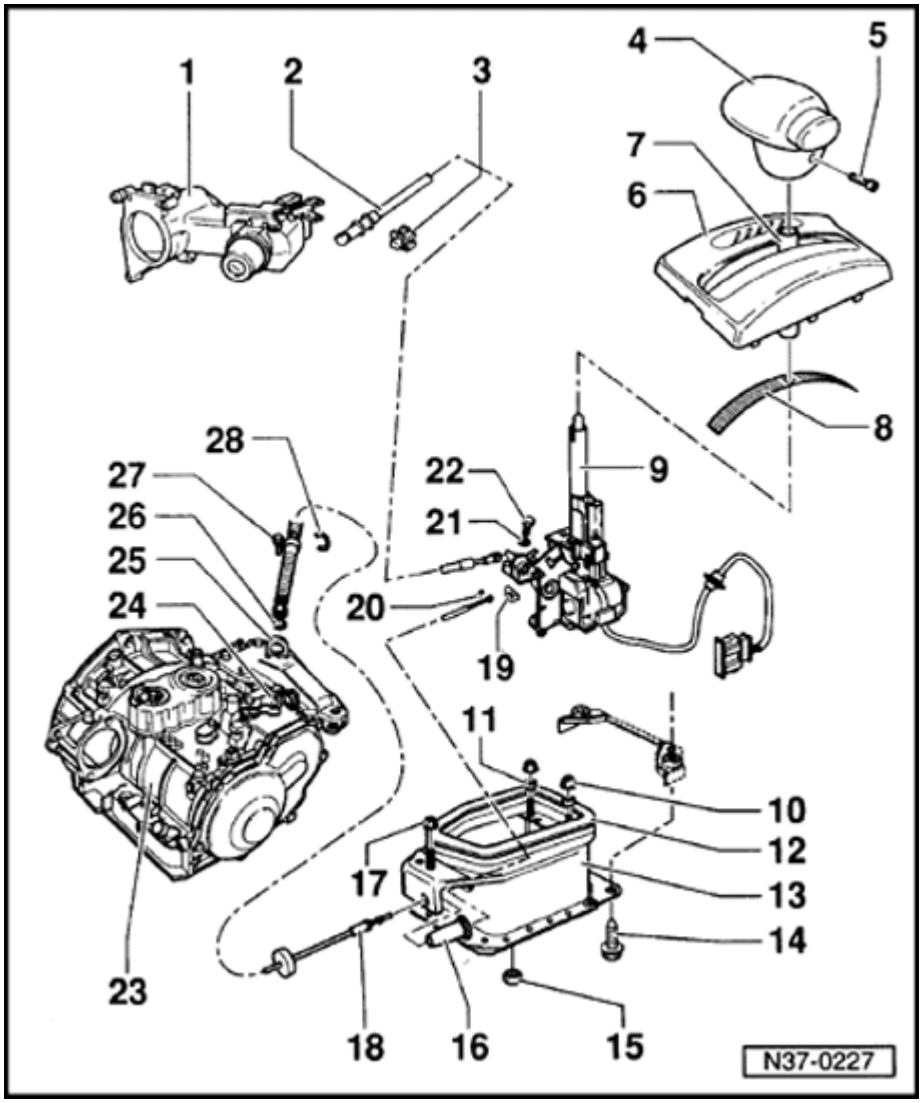

12 - Gasket

- Always replace

13 - Selector housing

- Does not need to be removed to replace selector lever cable or individual shift mechanism parts
- Removing and installing ⇒ Fig. 1

14 - Bolt, 25 Nm

15 - Nut, 15 Nm

- Always replace
- Qty. 3

16 - Protective sleeve

- Insert into selector housing before installing selector lever cable ⇒ Fig. 4

17 - Hex nut, tighten to 25 Nm.

- With collar

37-18

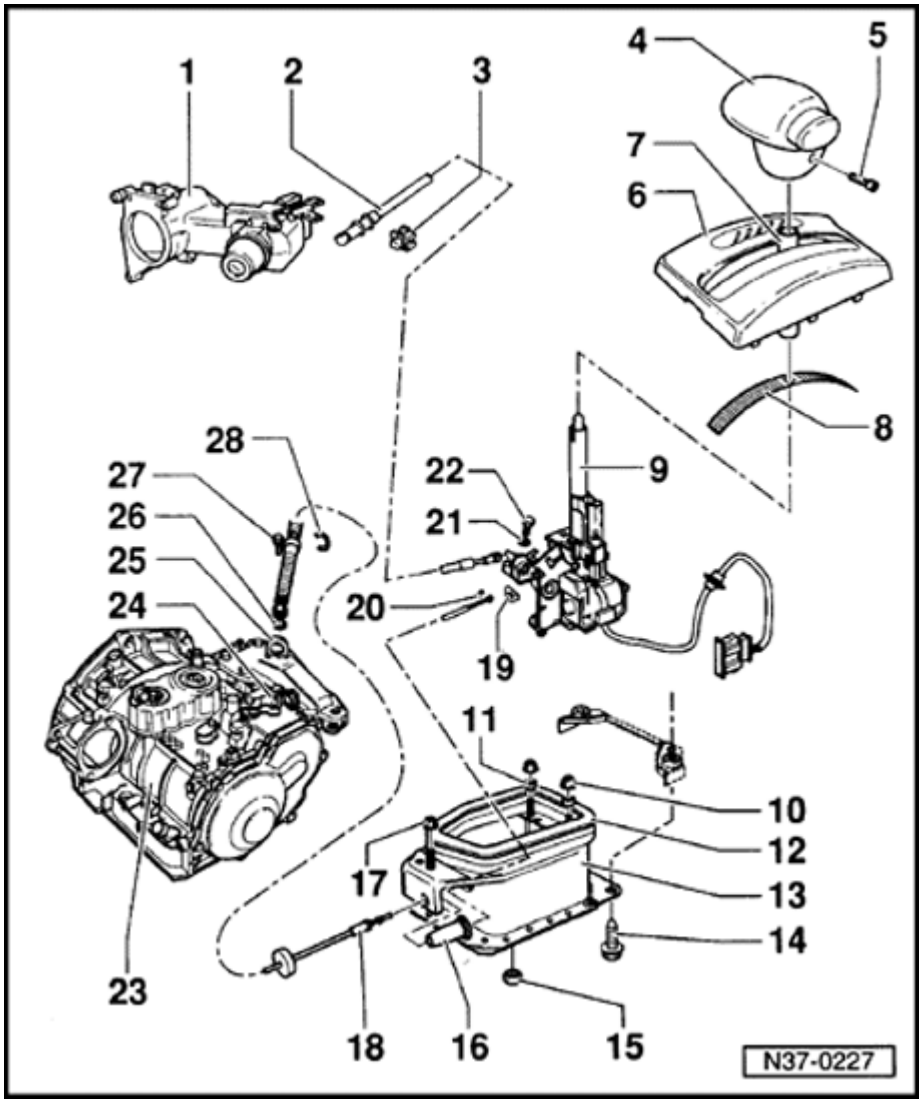

18 - Selector lever cable

- Do not bend or kink
- Lightly grease cable eyelet and cable ends before installing
- To remove selector lever cable, remove lower protective plate, exhaust system is separated before catalytic converter and front shielding plate is removed.
- Tighten selector lever cable to mounting bracket for selector housing to 20 Nm.

- Remove clipped cable out of mounting bracket of transmission ⇒ Fig. 5
  - Check guide tube for proper seating
  - Check protective sleeve between console and lever/shift rod for proper seating and secure selector lever cable with corrugated locking element
  - Securing selector lever cable to selector lever ⇒ Fig. 3
  - Adjusting ⇒ Page 37-36

37-19

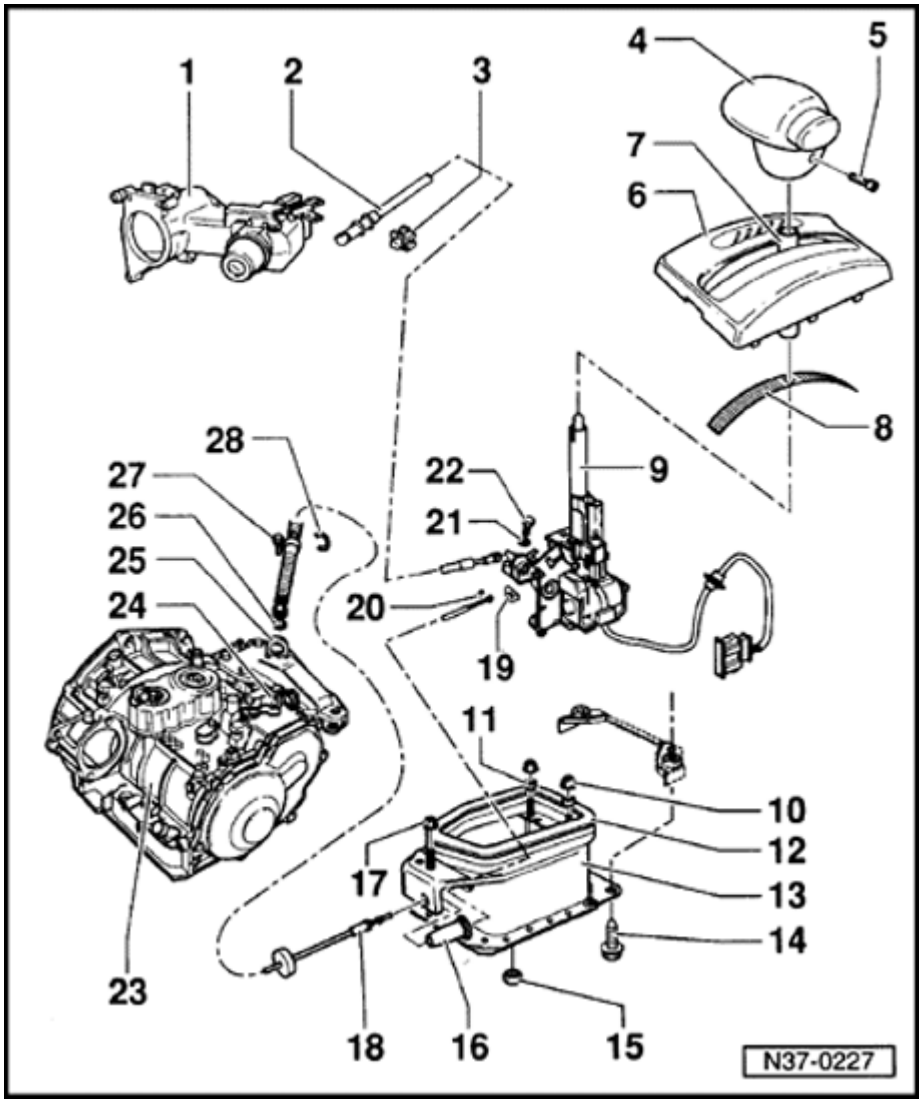

19 - Gasket

- Glued onto bracket
- Replace if damaged

20 - Locking washer

- Install after inserting selector lever cable ⇒ Fig. 3

21 - Washer

22 - Bolt, 6 Nm

23 - Transmission

24 - Lever

- For selector shaft

25 - Console

- With bracket for selector lever cable

37-20

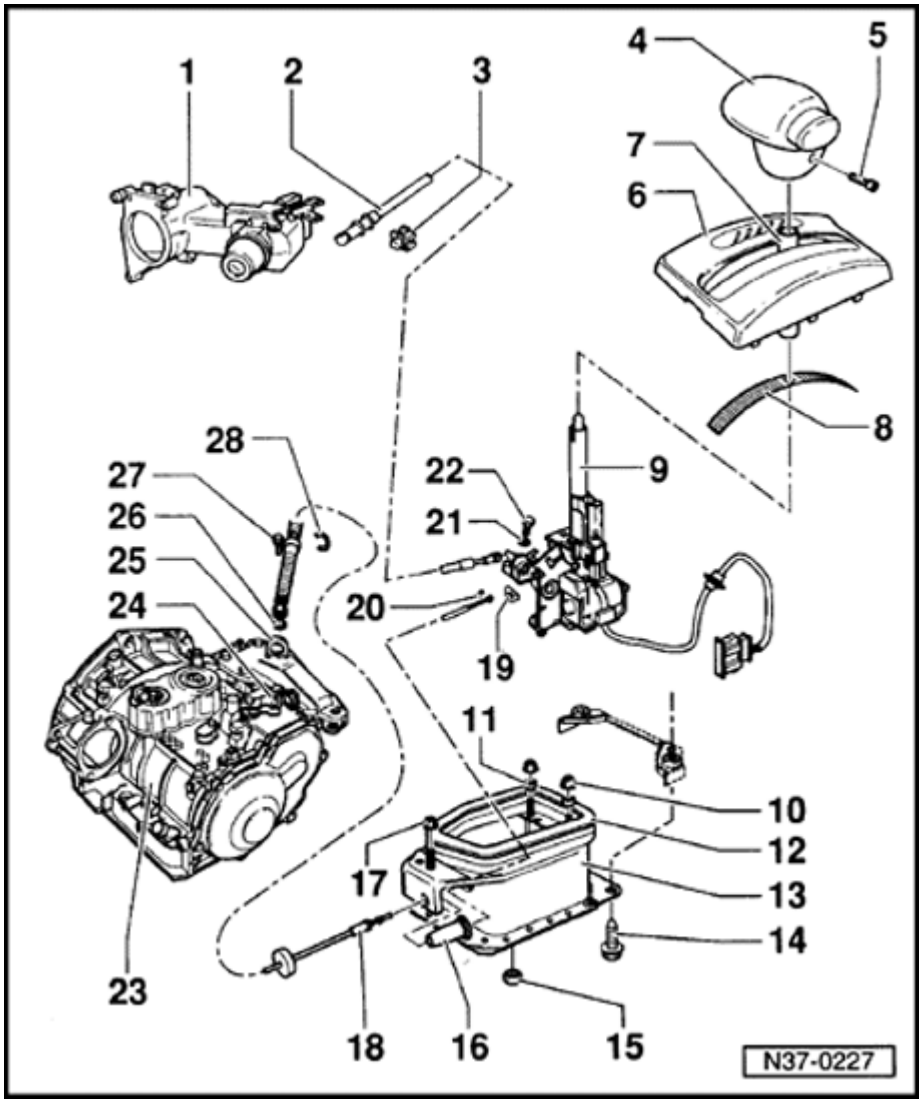

26 - Washer

27 - Bolt with collar, 25 Nm

28 - Corrugated locking element

- For selector lever cable
- Always replace

37-21

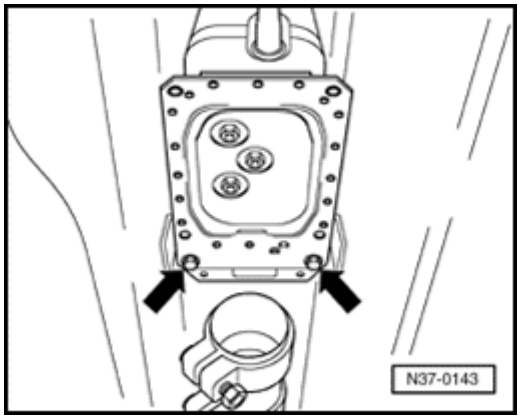

Fig. 1 Removing and installing selector housing

Procedure

- Remove rear center console.
- Remove hex nut with collar.
- Remove lower protective plate.
- Disconnect harness connectors to oxygen sensors, detach exhaust system at front catalytic converter.
- Remove front shielding plate and remove rear bolts (arrows).

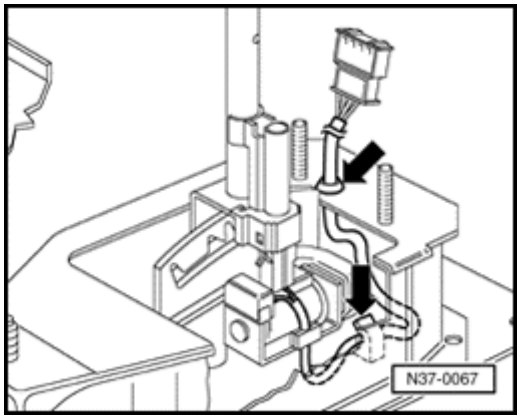

Fig. 2 Securing wiring harness to selector housing

Procedure

- Press wiring harness into clips and into selector housing (arrows).

37-22

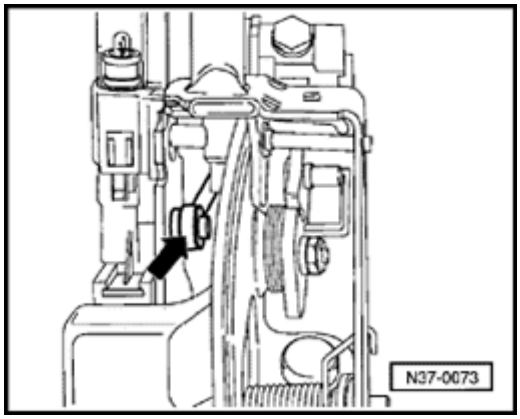

Fig. 3 Securing selector lever cable to selector lever

Procedure

- Place eyelet of selector lever cable (arrow) onto selector lever and secure with locking washer.

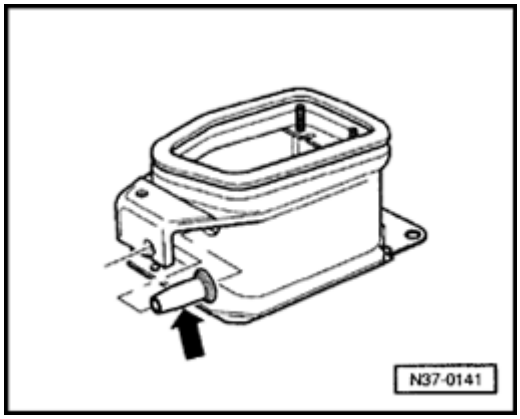

Fig. 4 Installing protective sleeve into selector housing

Procedure

- Insert protective sleeve (arrow) before installing selector lever cable.

37-23

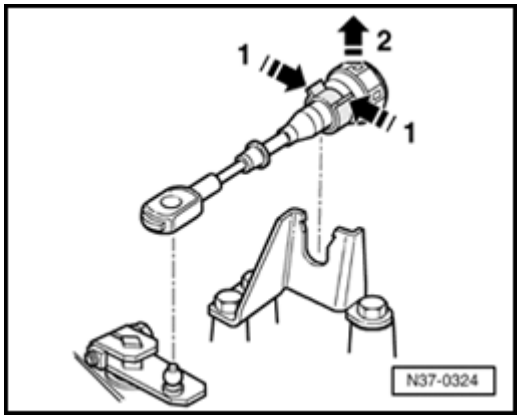

Fig. 5 Remove clipped selector lever cable out of bracket

Procedure

- First disengage selector lever cable -1-, then remove from bracket -2-.

37-24

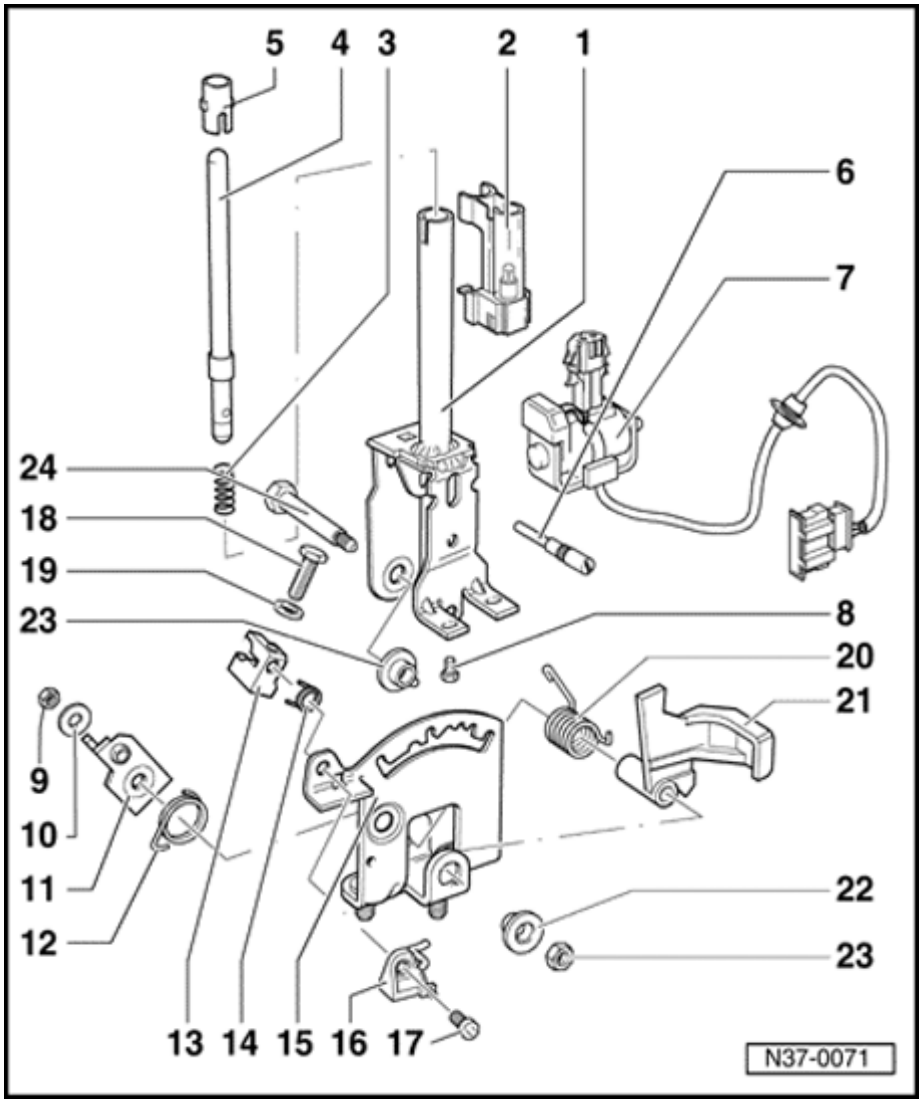

Selector lever, (vehicles with ignition key removal lock), disassembling and assembling

Note:

Selector lever must be removed to replace the individual components of selector lever ⇒ Page 37-16 , 9 .

1 - Selector lever

- Assembling ⇒ Fig. 1

2 - Indicator lighting

- Securing connector for indicator lighting ⇒ Fig. 4

3 - Spring

4 - Pressure rod

- Grease in areas of slide surfaces

37-25

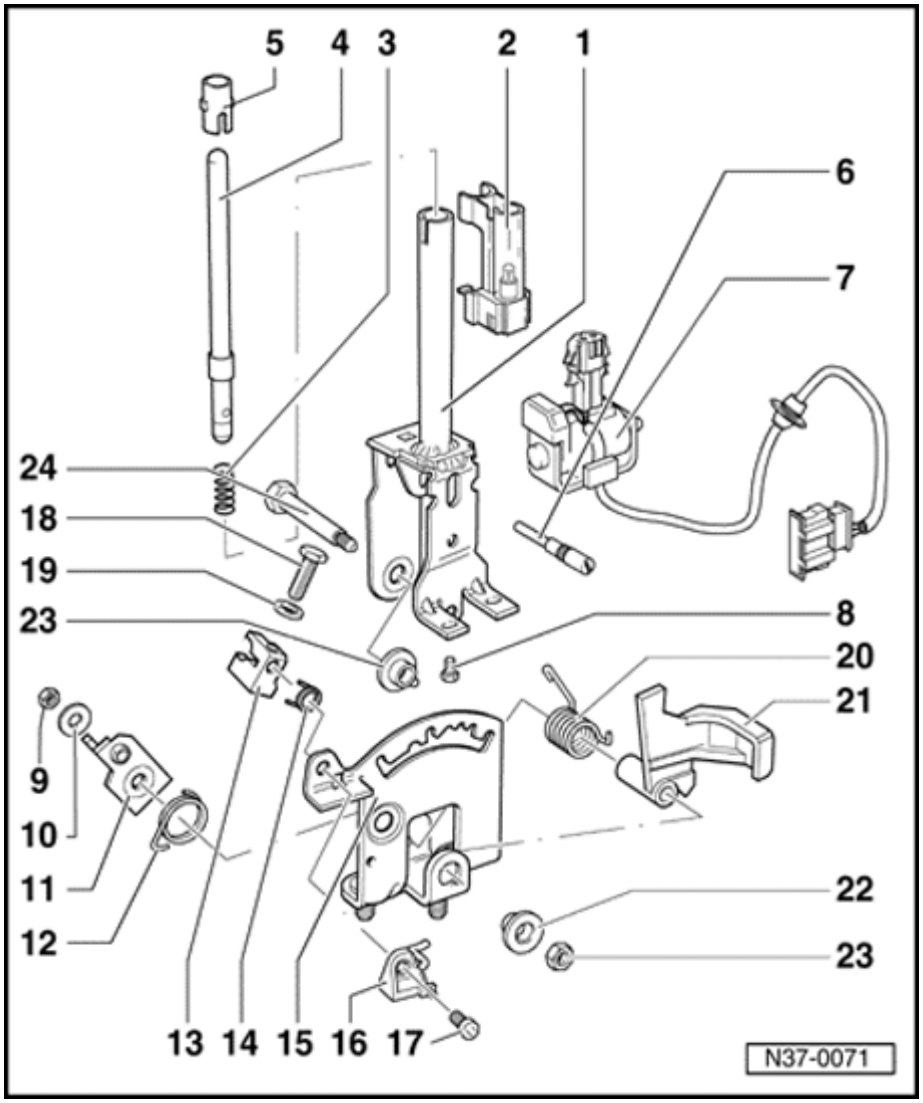

5 - Guide sleeve

- Insert after installing pressure rod

6 - Set screw

- Always replace
- To loosen set screw, remove shift lock solenoid and indicator lighting. Tension set screw in vise and loosen by turning the selector lever.
- Insert with locking fluid (AMV 185 101 A1)

7 - Shift lock solenoid - N110-

- Adjusting ⇒ Fig. 2

- Function test ⇒ Fig. 3

8 - Bolt, 3 Nm

- Qty. 2
- Insert with locking fluid (AMV 185 101 A1)

37-26

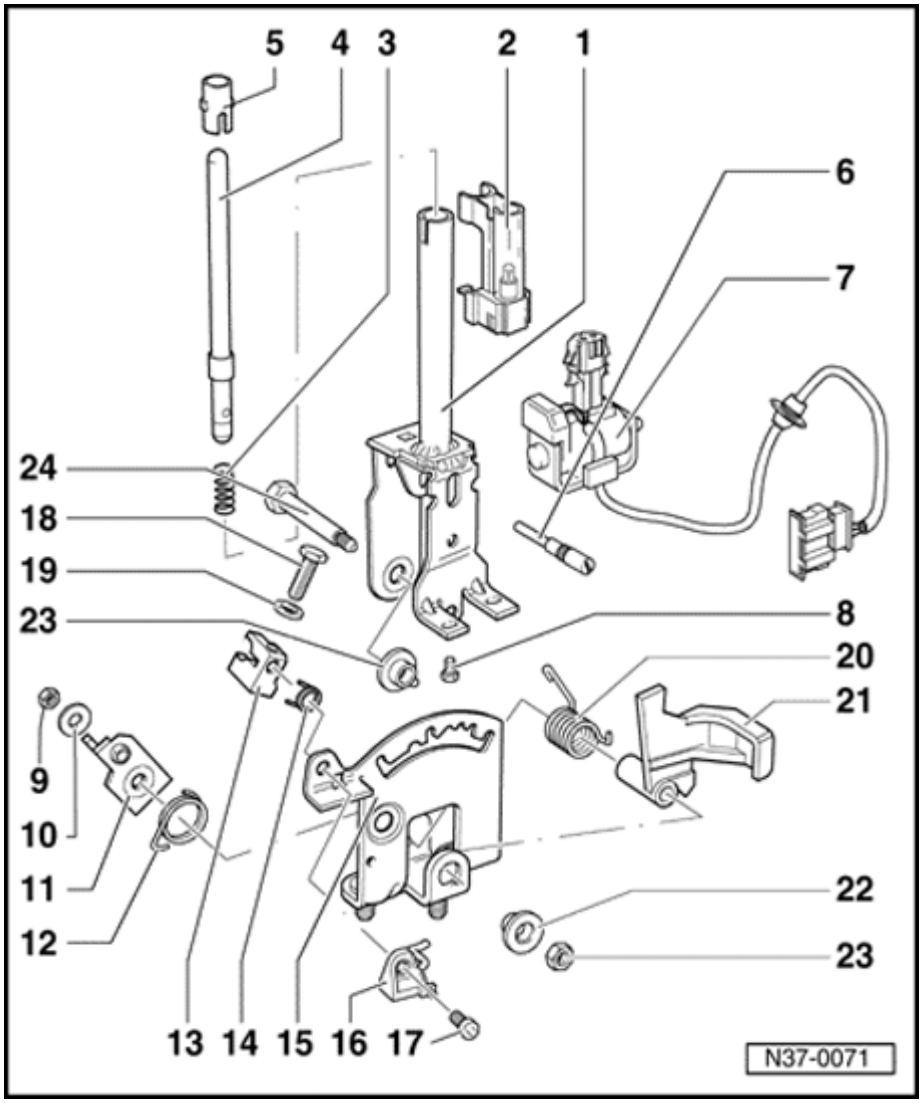

9 - Nut, 5 Nm

- Always replace

10 - Washer

11 - Catch lever

- For ignition key removal lock
- Adjusting together with locking cable ⇒ Page 37-35

12 - Spring

- Hook into hole of detent plate

13 - Mounting bracket

- For locking cable
- Removing and installing locking cable ⇒ Page 37-31
- Adjusting locking cable ⇒ Page 37-

35

14 - Spring

- For locking pin

37-27

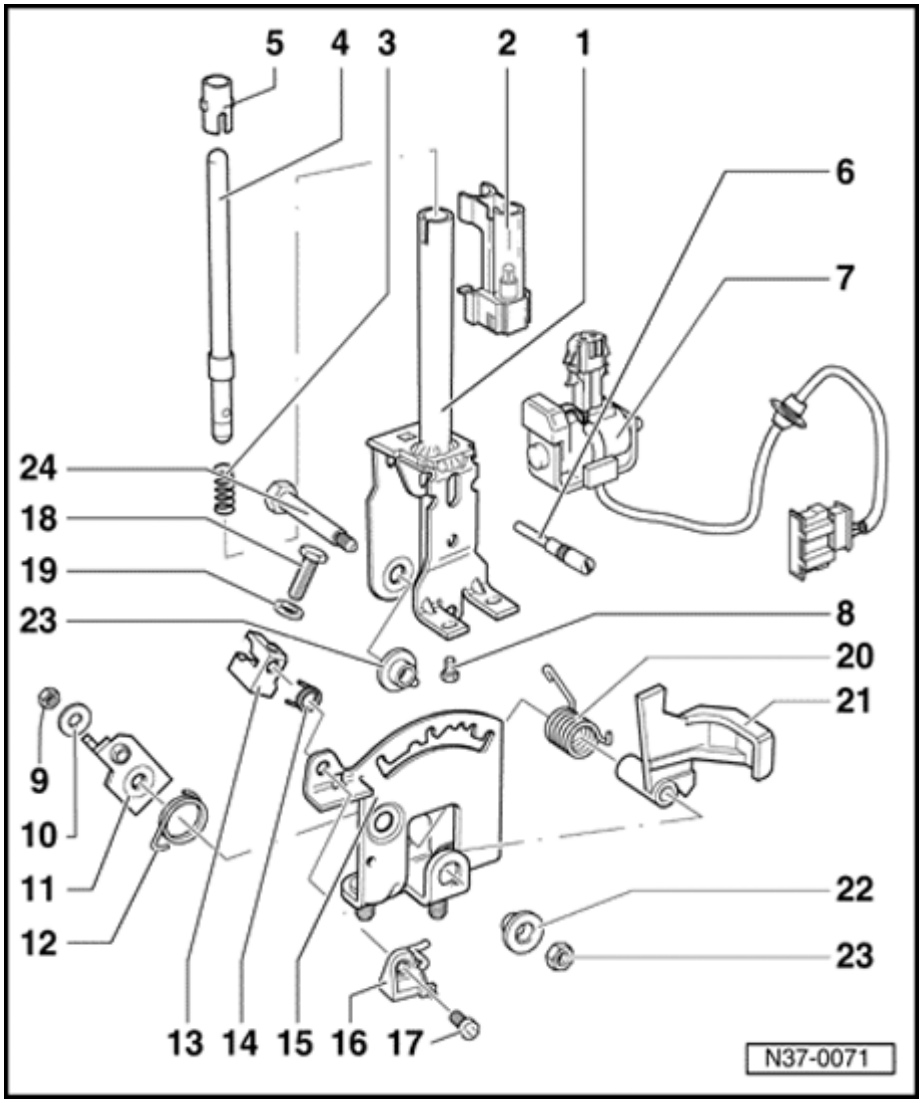

15 - Shift detent

- Before inserting in selector housing, assemble selector lever ⇒ Fig. 1

16 - Locking pin

- With retainer

17 - Socket head bolt, 6 Nm

18 - Bolt, 6 Nm

19 - Washer

20 - Spring

- Insert into selector lever together with lever ⇒ item 21

21 - Lever

- For locking in selector lever position "N" or "P"
- Adjusting ⇒ Fig. 2

37-28

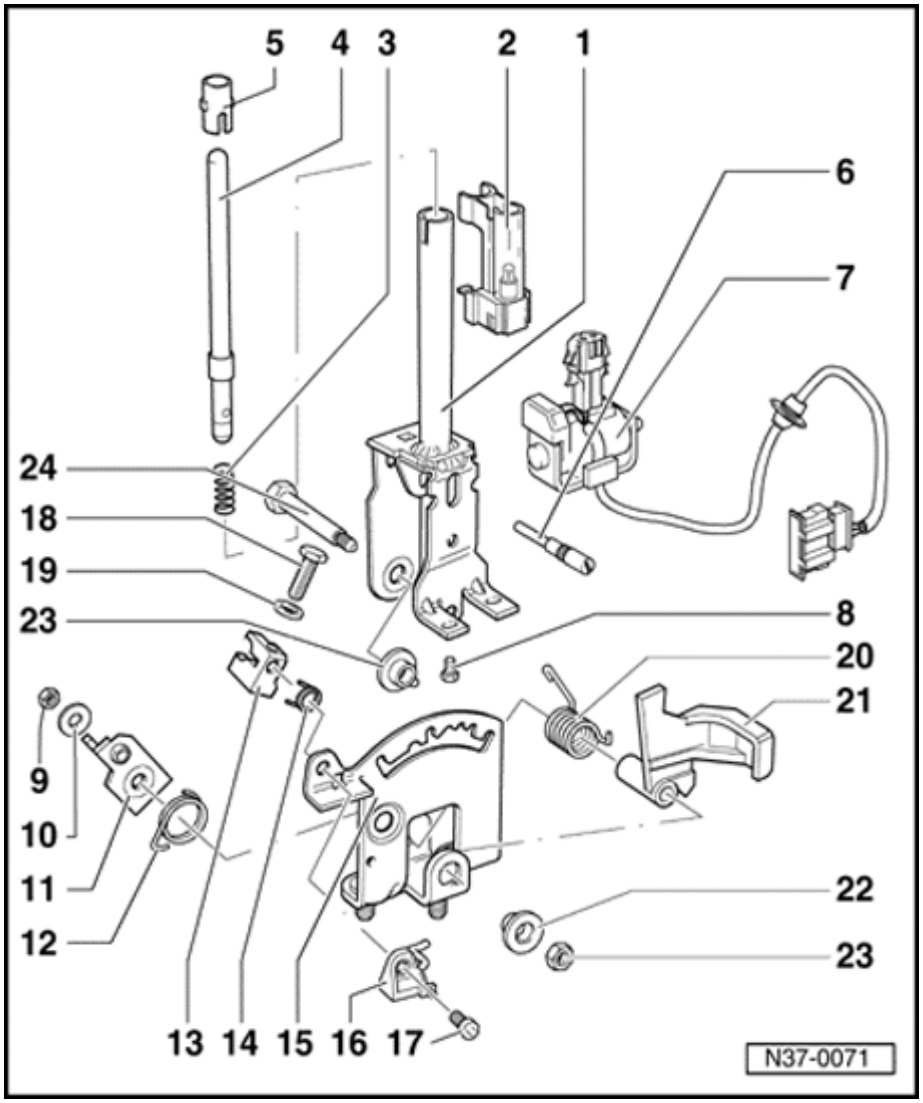

22 - Socket

23 - Nut, 10 Nm

- Always replace

24 - Collar bolt

- Grease on shank

37-29

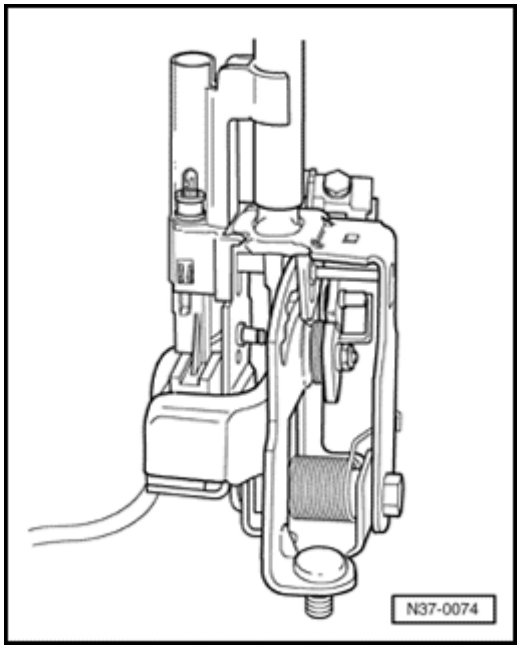

Fig. 1 Assembling selector lever before installing

Before installing selector lever in selector housing, Shift Lock Solenoid -N110- is adjusted and function test performed ⇒ Fig. 3 .

Procedure

- Install set screw and bolts for Shift Lock Solenoid -N110- with locking fluid (AMV 185 101 A1).

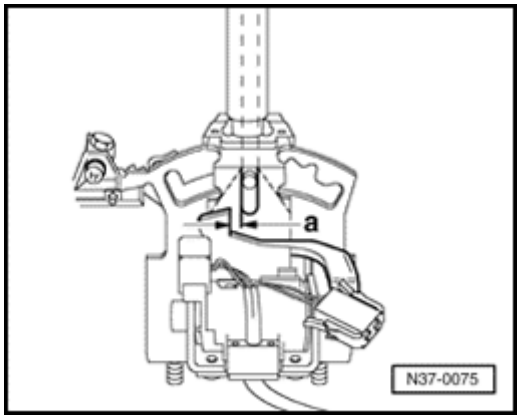

Fig. 2 Adjusting Shift lock solenoid -N110-

Procedure

- Insert solenoid into long holes by sliding so that a play -a- of 0.3 mm is created between pressure rod and lever ⇒ Fig. 3 .

37-30

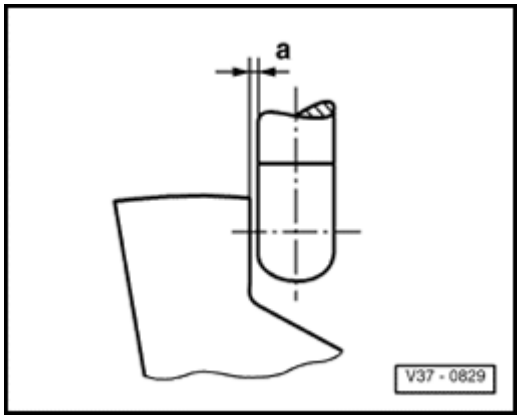

Fig. 3 Adjusting play between pressure rod and lever

Dimension a + 0.3 mm

Function test

1 - Place selector lever to "P" and supply solenoid with 12 V. Selector lever must not be engaged in any driving modes.

- Interrupt solenoid function, all driving modes must be able to be selected.

- Pressure rod must not hook on lever.

2 - Set selector lever to "N" and check as for 1.

- Adjust according to play, install selector lever completely.

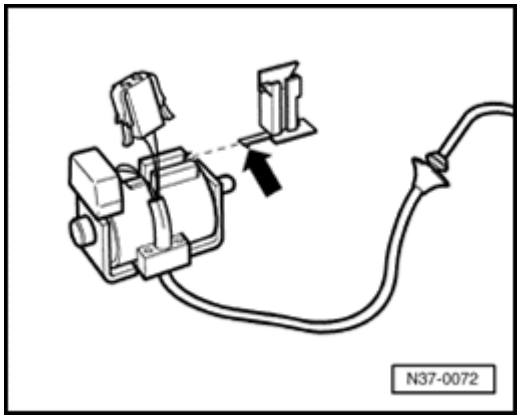

Fig. 4 Securing connector for indicator lighting

Procedure

- Slide retainer with tab (arrow) far enough until tab engages.
- Place connector wire into retainer and slide connector into retainer.

37-31

Locking cable (vehicles with ignition k removal lock), removing and installing

Removing

Note:

- *Locking cable must not be kinked.*
- *Locking cable must be adjusted after install* ⇒ *Page 37-35* .

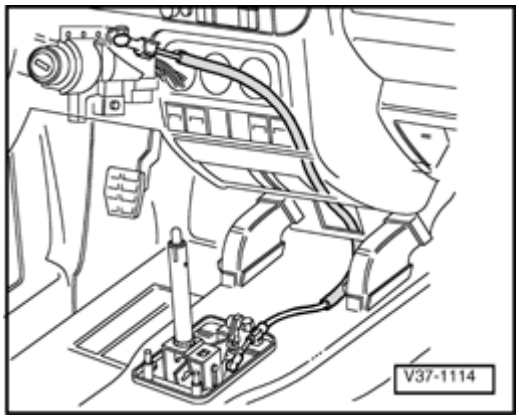

Installation position of locking cable

- Remove selector lever handle.
- Remove cover with cover strip.
- Remove center console.

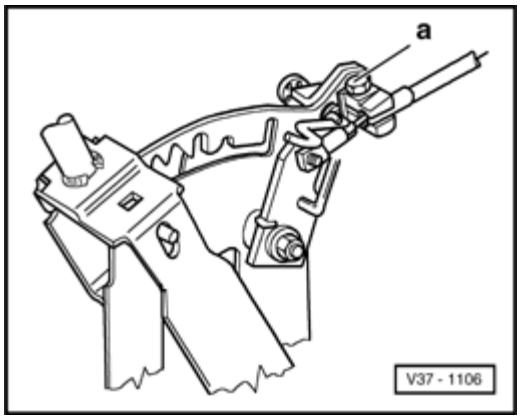

- Loosen bolt -a- for bracket, remove locking cable from locking lever and pull off from bracket.
- Remove steering wheel and ignition/starter switch trim panels.
- Press locking cable clip out of ignition/starte switch bracket and remove locking cable fro ball head.
- Remove locking cable.

37-32

Installing

Note:

When installing, make sure locking cable is routed correctly.

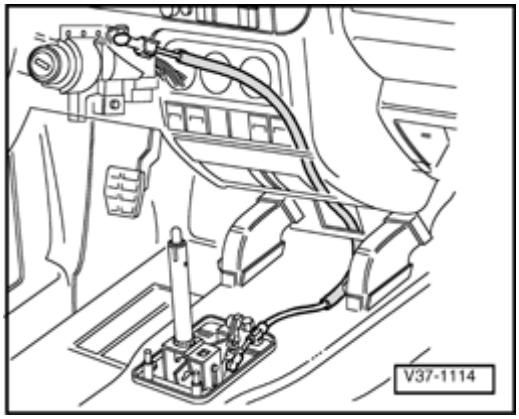

- Route locking cable in vehicle.

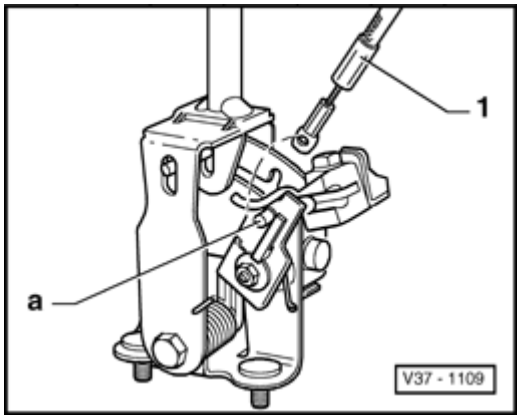

- Place locking cable -1- eyelet onto locking lever -a-.

37-33

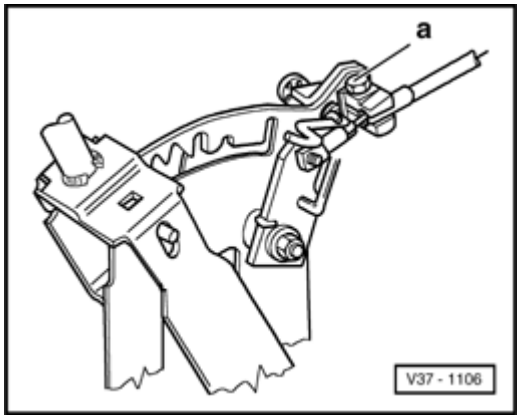

- Install locking cable in bracket.
- Tighten bolt -a- after adjusting locking cable.

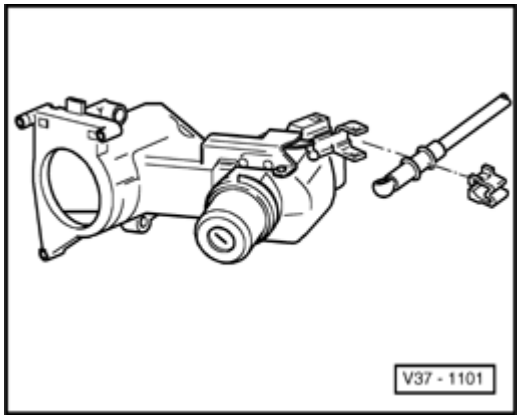

- Install locking cable clip onto locking cable.
- Press locking cable on ball head.
- Press locking cable with clip into ignition/starter switch bracket.

37-34

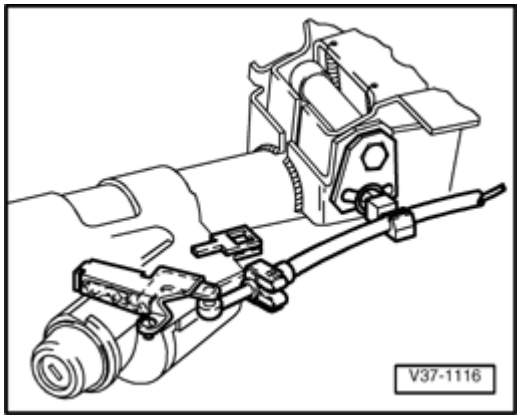

- Route locking cable on steering column.
- Adjusting locking cable on selector lever bracket ⇒ Page 37-35 .
- Install center console.
- Install cover with cover strip and selector lever handle.
- Mount ignition/starter switch trim panels and install steering wheel.

37-35

Locking cable (vehicles with ignition key removal lock), adjusting

Note:

Adjustment of the locking cable must always be performed in the installed position.

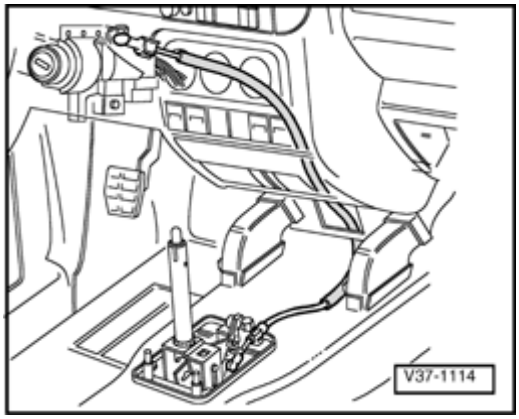

Installation position of locking cable

Procedure

- Shift selector lever into position "1".
- Turn ignition key toward right (start position) and release.

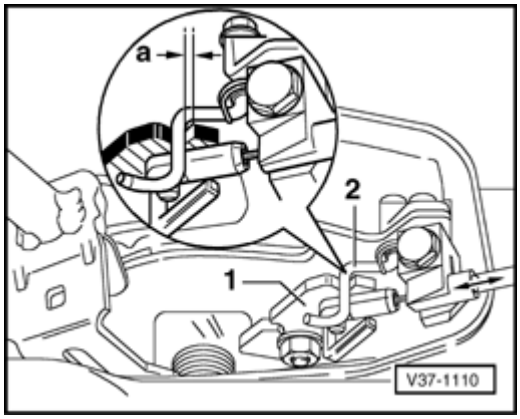

- Adjust play of a = 0.7mm between lever -1- and locking pin -2- by sliding locking cable protective sleeve.
- Tighten bolt for locking cable bracket to 6 Nm in this position.
- Shift selector lever into position "P" and turn ignition key into end position.
- Remove ignition key.
  - ♦ It must only be possible to remove ignition key in this position.
  - ♦ Selector lever cannot be switched out of position "P".

37-36

Selector lever cable, checking and adjusting

Checking

- Remove selector lever cable combi-bolt from lever/selector shaft.

- Move selector lever from "P" to "1".

  - Shift mechanism and selector lever cable must move freely. If necessary replace selector lever cable or service shift mechanism.

Always replace selector lever locking washer at transmission lever after dismantling.

37-37

Adjusting

- Place selector lever in position "P".
- Loosen selector lever cable combi-bolt on selector shaft lever.
- Bring selector shaft lever into position "P" on transmission. Locking lever must engage in park lock wheel, both front wheels locked.
- In this position tighten selector shaft lever combi-bolt to 25 Nm.

37-38

Ignition key removal lock (vehicles with ignition key removal lock), checking

Procedure

- Shift selector lever to "P" position and turn ignition key to end ("OFF") position.

  - It must only be possible to remove ignition key with selector lever in "P" position.

- Remove ignition key. Selector lever cannot be shifted out of "P" position.

38-1

Electrical components of transmission control, removing and installing, checking

Safety precautions

WARNING!

Observe the following for all installations, especially in engine compartment due to lack of room:

- ***Route lines of all types (e.g. for fuel, hydraulic, EVAP canister system, coolant and refrigerant, brake fluid, vacuum) and electrical wiring so that the original path is followed.***
- ***Watch for sufficient clearance to all moving or hot components.***
- ***Shift selector lever into position -P- and engage parking brake before working with the engine running.***

If special testing equipment is required during road test, note the following:

- Test equipment must always be secured to the rear seat and operated from there by a second person.

If test and measuring equipment is operated from the passenger seat, the person seated there could be injured in the event of an accident involving deployment of the passenger-side airbag.

Note:

- *For the electric components to work properly, a voltage of at least 11.5 V is required.*
- *Transmission Control Module (TCM) is equipped with On Board Diagnostic (OBD).*
- *It is possible that the control module will recognize a malfunction and store a DTC during some tests. Therefore the following work steps must be performed in the mentioned sequence after ending all tests and repairs.*

  - - Check DTC memory ⇒ Page ST-22 , Diagnostic mode 3: Check DTC Memory,

  - - Erase DTC memory ⇒ Page ST-26 , Diagnostic mode 4: Reset/erase diagnostic data

  - - For completion, generate readiness code ⇒ Page ST-52 .

38-3

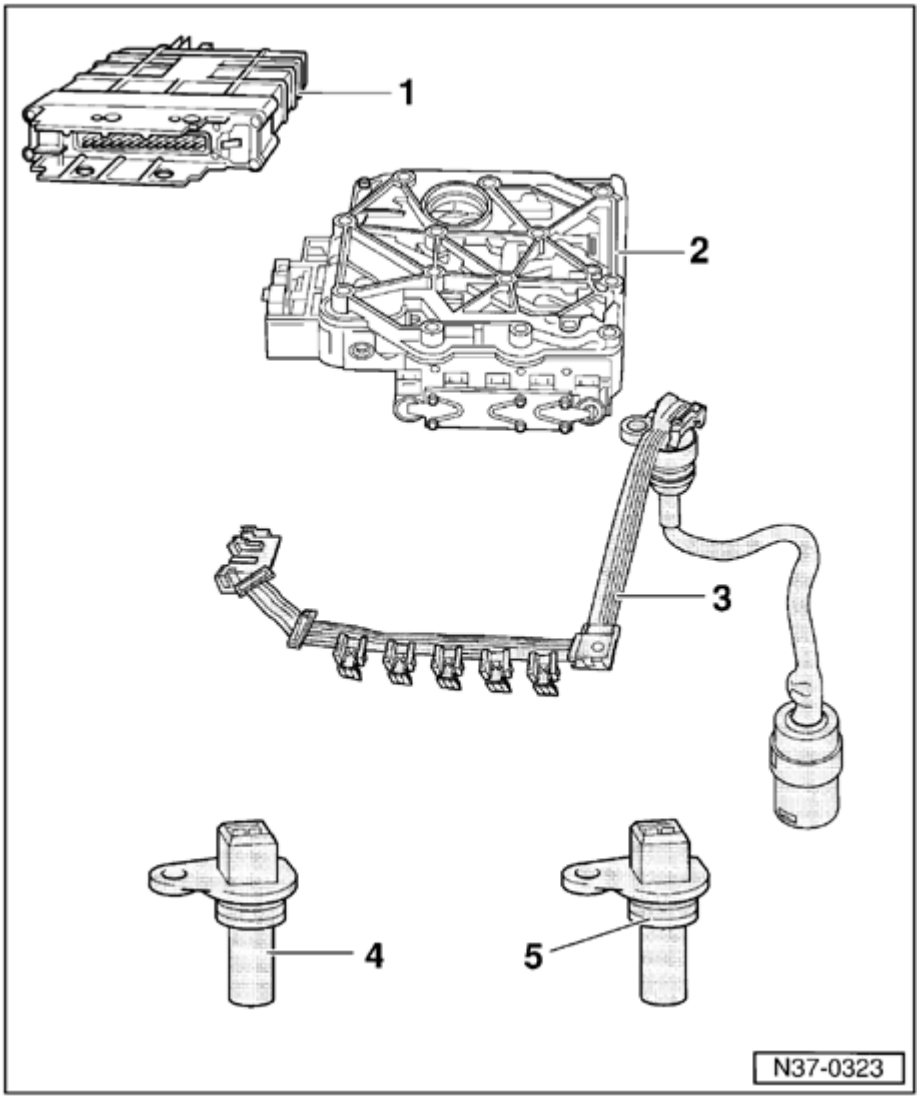

Electrical/electroni components and component locations

1 - Transmission Control Module -J217-

- Component location ⇒ Fig 1
- Replace ⇒ Page 38-27

2 - Valve body

- Component location ⇒ Fig 2
- Solenoid Valve 1 -N88- to Solenoid Valve 7 -N94- are secured to valve body.
- Check solenoi valves in valve body ⇒ Page 38-22

3 - Circuit board with integrated Transmission Fluid Temperature Sensor -G93-

- Component location ⇒ Fig 6
- Check Transmission Fluid Temperature

Sensor -G93-
⇒ Page 38-19

38-4

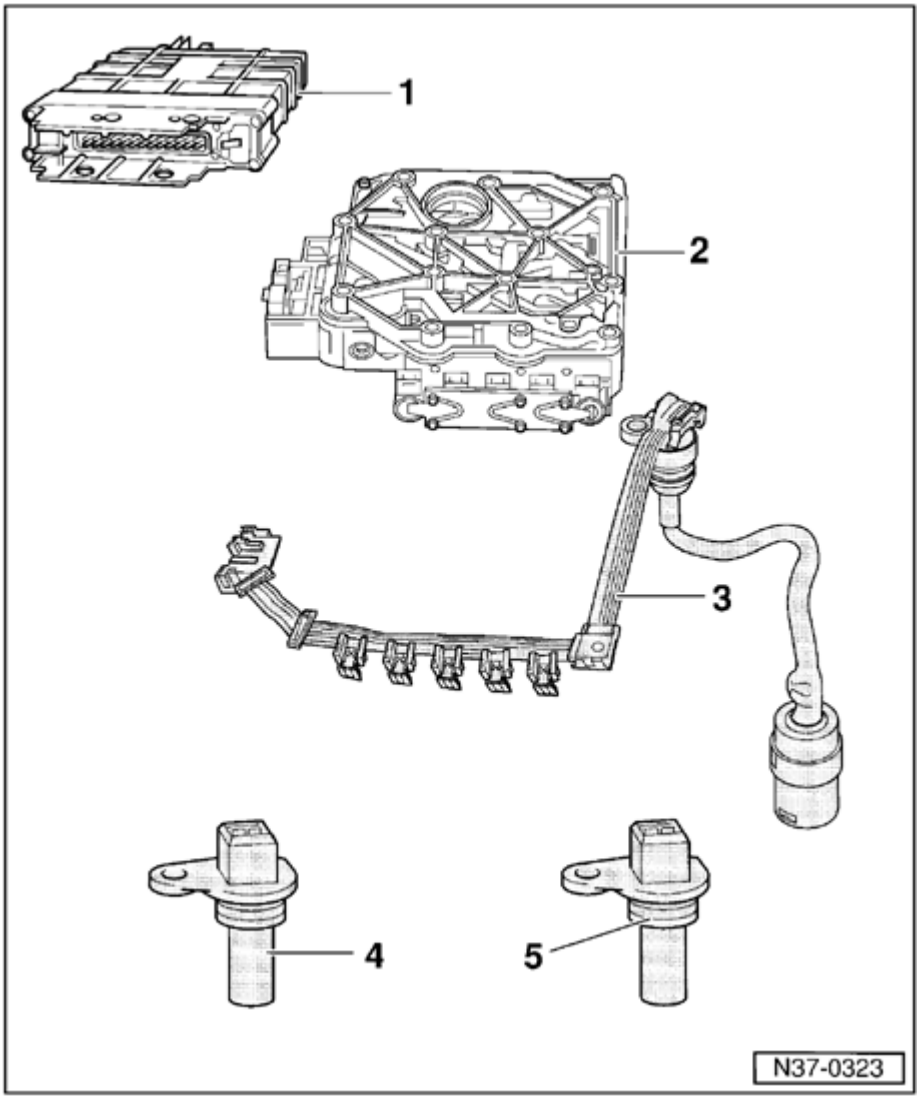

4 Transmission - Vehicle Speed Sensor (VSS) -G38-

- White, 2-pin connector

- Before disconnecting, mark allocation of connector to component
  - Removing and installing ⇒ Fig. 3
  - Checking ⇒ Page 38-13

5 Speedometer - Vehicle Speed Sensor (VSS) -G68-

- 2-pin connector, black

- Before disconnecting, mark allocation of connector to component
  - Removing and installing ⇒ Fig. 4
  - Checking ⇒ Page

38-16

The following component is not shown:

Multi-Function Transmission Range (TR) Switch -F125-

- Removing and installing ⇒ Fig. 5
- Checking ⇒ Page 38-10

38-5

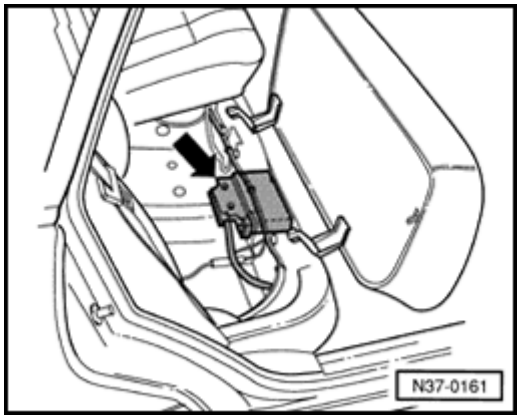

Fig. 1 Component location of Transmission Control Module (TCM) -J217-

Control module (arrow) is installed under the rear seat bench.

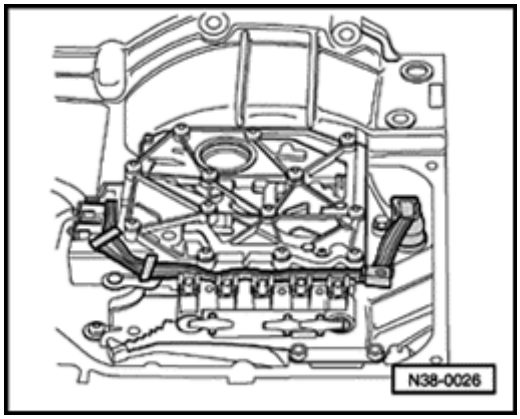

Fig. 2 Valve body

Component location: Valve body is located beneath the oil pan.

Solenoid Valve 1 -N88- to Solenoid Valve 7 -N94- are secured to valve body.

38-6

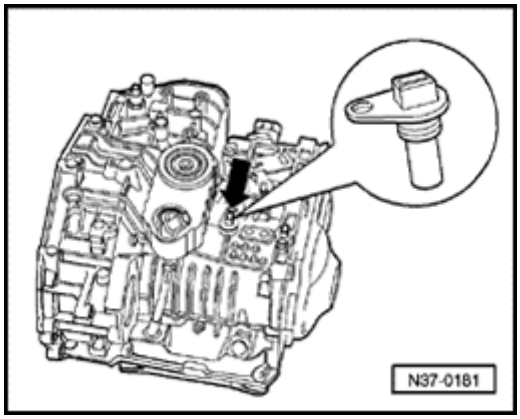

Fig. 3 Transmission Vehicle Speed Sensor (VSS) -G38-, removing and installing

Component location: Transmission Vehicle Speed Sensor (VSS) (arrow)is located on top of transmission.

Recommended special tools and equipment

- V.A.G1331 torque wrench (5 to 50 Nm)

Removing

- Disconnect white connector from Transmission Vehicle Speed Sensor (VSS) -G38-.
- Remove bolt and remove sensor.
- Replace O-ring.

Installing

Installation is performed in the reverse order of removal.

- Tighten bolt to 10 Nm.

38-7

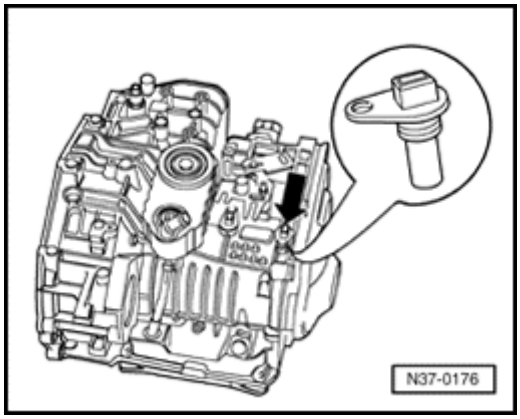

Fig. 4 Vehicle Speed Sensor (VSS) -G68-, removing and installing

Component location: Vehicle Speed Sensor (VSS) (arrow) is located on top of transmission.

Recommended special tools and equipment

- V.A.G1331 torque wrench (5 to 50 Nm)

Removing

- Disconnect black connector from Vehicle Speed Sensor (VSS) -G68-.
- Remove bolt and sensor.
- Replace O-ring.

Installing

Installation is performed in the reverse order of removal.

- Tighten bolt to 10 Nm.

38-8

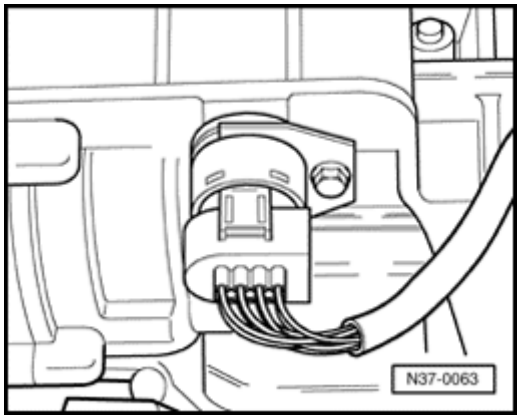

Fig. 5 Multi-Function Transmission Range (TR) Switch -F125-, removing and installing

Component location: Multi-function switch is located at rear on transmission.

Recommended special tools and equipment

- V.A.G1331 torque wrench (5 to 50 Nm)

Removing

- Disconnect 8-pin connector from multi-function switch.
- Remove bolt and retainer.
- Remove Multi-Function Transmission Range (TR) Switch.
- Replace O-ring.

Installing

Installation is performed in the reverse order of removal.

- Tighten bolt to 10 Nm.

38-9

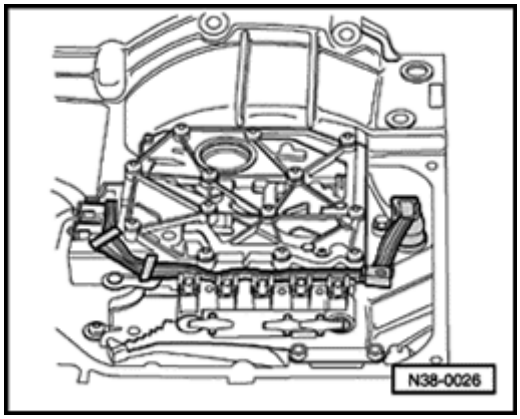

Fig. 6 Circuit board with integrated Transmission Fluid Temperature Sensor - G93-

Component location: Circuit board is located in oil pan at the valve body.

Circuit board can be replaced with transmission installed without removing the valve body.

Do not bend or damage the circuit board.

38-10

Multi-Function Transmission Range (T Switch, checking

Recommended special tools and equipmen

- V.A.G1526 Multimeter or V.A.G1715 multimeter
- V.A.G1594 Connector test kit
- Wiring diagram

Test requirements

- Selector lever must be in -P- position.
- Ground (GND) connections to transmissior must be OK.
- Ignition switched off.

Checking wiring

- Connect test box to control module wiring harness ⇒ Page ST-11 , connect test box fo wiring test.

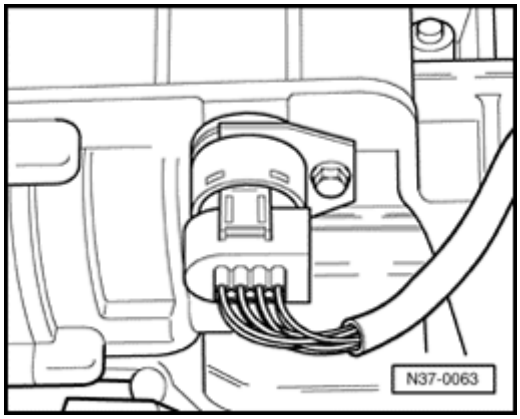

- Disconnect 8-pin connector from Multi-Funct Transmission Range (TR) Switch -F125-.

38-11

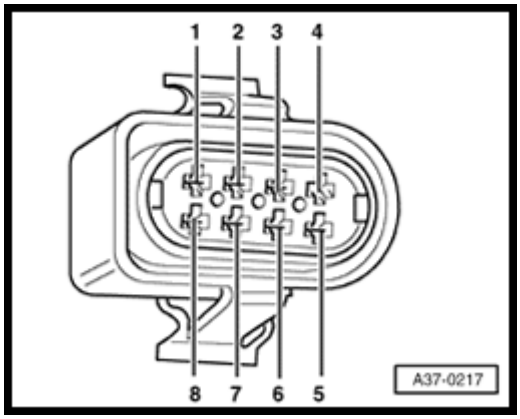

- Check wires between test box and 8-pin connector to Transmission Control Module (TCM) for open circuit according to wiring diagram.

  Terminal 1 + socket 63

  Terminal 2 + socket 40

  Terminal 3 + socket 1

  Terminal 5 + socket 23

  Terminal 6 + socket 62

  Terminal 7 + socket 18

  Wire resistance: max. 1.5 Ω

- Check wires for short circuit to each other.

  Specified value: ∞ Ω

If no malfunctions are found in wires:

- Check adjustment of selector lever cable ⇒ Page 37-36 , Selector lever cable, adjusting.

- Erase DTC memory of Transmission Control Module (TCM) ⇒ Page ST-26 , Diagnostic mode 4: Reset/erase diagnostic data.

- Generate readiness code ⇒ Page ST-52 .

If no malfunctions are detected in wires and selector lever cable adjustment OK:

- Replace Multi-Function Transmission Range (TR) Switch -F125- ⇒ Page 38-8 , item ⇒ Fig. 5 .

- Erase DTC memory of Transmission Control Module (TCM) ⇒ Page ST-26 , Diagnostic mode 4: Reset/erase diagnostic data.

- Generate readiness code ⇒ Page ST-52 .

- Erase DTC memory of Transmission Control Module (TCM) ⇒ Page ST-26 , Diagnostic mode 4: Reset/erase diagnostic data.

- Generate readiness code ⇒ Page ST-52 .

38-13

Transmission Vehicle Speed Sensor (VSS), checking

Recommended special tools and equipment

- V.A.G1526 Multimeter or V.A.G1715 multimeter
- V.A.G1594 Connector test kit
- Wiring diagram

Test requirements

- Selector lever must be in -P- position.
- Ground (GND) connections to transmission must be OK.
- Ignition switched off.

38-14

Checking wiring

- Connect test box to control module wiring harness ⇒ Page ST-11 , connect test box fo wiring test.

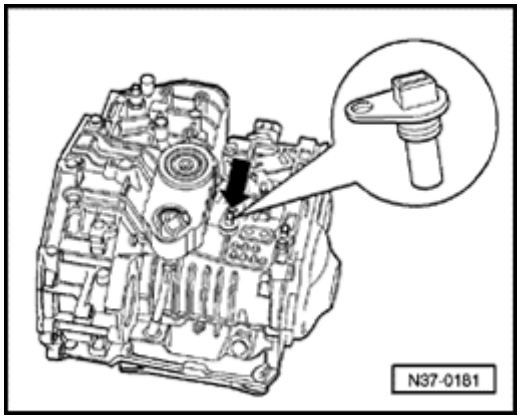

- Disconnect white connector from Transmissi Vehicle Speed Sensor (VSS) -G38-.

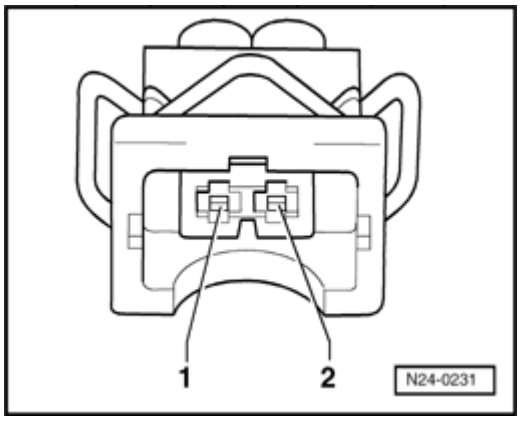

- Check wires between test box and 2-pin connector to Transmission Control Module (TCM) for open circuit according to wiring diagram.

  Terminal 1+socket 21

  Terminal 2+socket 66

  Wire resistance: max. 1.5 Ω

- Check wires for short circuit to each other, to vehicle Ground (GND) and to B+.

  Specified value: ∞ Ω

If no malfunctions are found in wires:

- Replace Transmission Vehicle Speed Sensor (VSS) -G38- ⇒ Page 38-6 , ⇒ Fig. 3 .

- Erase DTC memory of Transmission Control Module (TCM) ⇒ Page ST-26 , Diagnostic mode 4: Reset/erase diagnostic data.

- Generate readiness code ⇒ Page ST-52 .

38-16

Vehicle Speed Sensor (VSS), checking

Recommended special tools and equipment

- V.A.G1526 multimeter or V.A.G1715 multimeter
- V.A.G1594 connector test kit
- Wiring diagram

Test requirements

- Selector lever must be in -P- position.
- Ground (GND) connections to transmission must be OK.
- Ignition switched off.

38-17

Checking wiring

- Connect test box to control module wiring harness ⇒ Page ST-11 , connect test box fo wiring test.

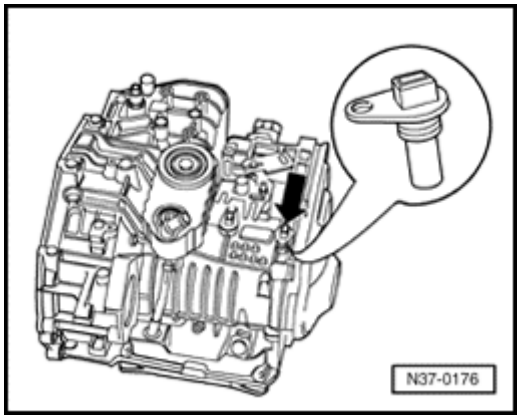

- Disconnect black connector from Vehicle Sp Sensor (VSS) -G68-.

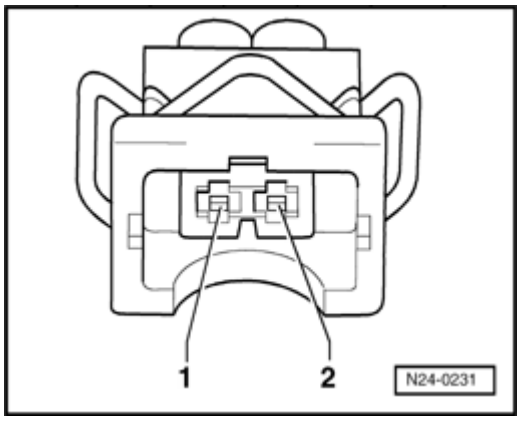

- Check wires between test box and 2-pin connector to Transmission Control Module (TCM) for open circuit according to wiring diagram.

  Terminal 1 + socket 65

  Terminal 2 + socket 20

  Wire resistance: max. 1.5 Ω

- Check wires for short circuit to each other, tc vehicle Ground (GND) and to B+.

  Specified value: ∞ Ω

If no malfunctions are found in wires:

- Replace Vehicle Speed Sensor (VSS) -G68- ⇒ Page 38-7 , ⇒ Fig. 4 .

- Erase DTC memory of Transmission Control Module (TCM) ⇒ Page ST-26 , Diagnostic mode 4: Reset/erase diagnostic data.

- Generate readiness code ⇒ Page ST-52 .

38-19

Transmission Fluid Temperature Sensor, checking

Recommended special tools and equipment

- V.A.G1526 Multimeter or V.A.G1715 multimeter
- V.A.G1594 Connector test kit
- Wiring diagram

Test requirements

- Selector lever must be in -P- position.
- Ground (GND) connections to transmission must be OK.
- Ignition switched off.

Test sequence

- Connect test box to control module wiring harness ⇒ Page ST-11 , connect test box for wiring test.

Checking resistance

- Measure resistance of Transmission Fluid Temperature Sensor -G93- at test box between sockets 6 + 67:

ATF temperature	Specified value
approx. 20 ° C	230.0 to 265.0 KΩ
approx. 60 ° C	37.0 to 51.0 KΩ
approx. 120 ° C	5.0 to 9.0 KΩ

If one of the specified values is not obtained:

- Check wires according to wiring diagram ⇒ Page 38-21 .

38-21

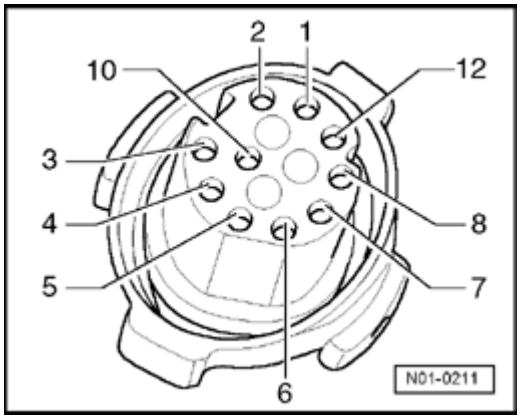

Checking wiring

- Disconnect 12-pin harness connector at transmission.

- Check wires between test box and 12-pin connector to Transmission Control Module (TCM) for open circuit according to wiring diagram.

  Terminal 1 + socket 67

  Terminal 12 + socket 6

  Wire resistance: max. 1.5 Ω

- Check wires for short circuit to each other, to vehicle Ground (GND) and to B+.

  Specified value: ∞ Ω

If no malfunctions are found in wires:

- Replace Transmission Fluid Temperature Sensor -G93-:

⇒ *Repair Manual, 4 Spd. Automatic Transmiss 01M, Repair Group 38; removing and installing valve body*

- Erase DTC memory of Transmission Control Module (TCM) ⇒ Page ST-26 , Diagnostic m 4: Reset/erase diagnostic data.

- Generate readiness code ⇒ Page ST-52 .

38-22

Solenoid valves in valve body, checking

Recommended special tools and equipment

- V.A.G1526 multimeter or V.A.G1715 multimeter
- V.A.G1594 connector test kit
- Wiring diagram

Test requirements

- Selector lever must be in -P- position.
- Ground (GND) connections to transmission must be OK.
- Ignition switched off.

Test sequence

- Connect test box to control module wiring harness ⇒ Page ST-11 , connect test box for wiring test.

Checking resistance

- Measure resistance of solenoid valves at test box between sockets:

Component	Bushing	Specified value Ω
Solenoid valve 1 - N88-	55+67	55,0...65,0
Solenoid valve 2 - N89-	54+67	55,0...65,0
Solenoid valve 3 - N90-	9+67	55,0...65,0
Solenoid Valve 4 - N91-	47+67	4,5...6,5
Solenoid valve 5 - N92-	56+67	55,0...65,0
Solenoid Valve 6 - N93-	22+58	4,5...6,5
Solenoid Valve 7 - N94-	10+67	55,0...65,0

Note:

Resistance value is valid at approx. 20° C. At higher temperatures, resistance value increases.

If one of the specified values is not obtained:

- Check wires according to wiring diagram ⇒ Page 38-24 .

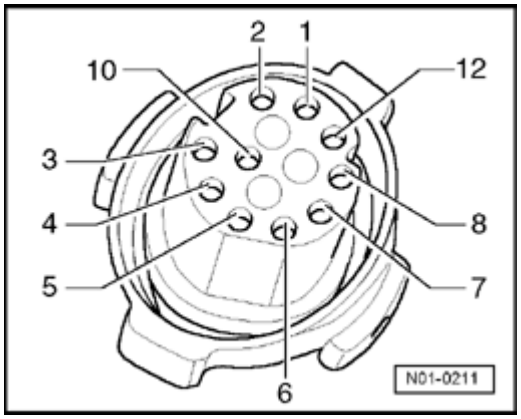

Checking wiring

- Disconnect 12-pin harness connector at transmission.

- Check wires between test box and 12-pin connector to Transmission Control Module (TCM) for open circuit according to wiring diagram. Wire resistance: max. 1.5 Ω

Component	Connector	Test b
Solenoid valve 1 -N88-	Terminal 1	Socket
	Terminal 3	Socket
Solenoid valve 2 -N89-	Terminal 1	Socket
	Terminal 4	Socket
Solenoid valve 3 -N90-	Terminal 1	Socket
	Terminal 5	Socke
Solenoid Valve 4 -N91-	Terminal 1	Socket
	Terminal 6	Socket
Solenoid valve 5 -N92-	Terminal 1	Socket
	Terminal 7	Socket

Component	Connector	Test box
Solenoid Valve 6 -N93-	Terminal 2	Socket 22
	Terminal 8	Socket 58
Solenoid Valve 7 -N94-	Terminal 1	Socket 67
	Terminal 10	Socket 10

- Check wires for short circuit to each other.

  Specified value: ∞ Ω

If no malfunctions are found in wires:

- Replace relevant solenoid valve.

⇒ *Repair Manual, 4 Spd. Automatic Transmission 01M, Repair Group 38; removing and installing valve body*

- Erase DTC memory of Transmission Control Module (TCM) ⇒ Page ST-26 , Diagnostic mode 4: Reset/erase diagnostic data.

- Generate readiness code ⇒ Page ST-52 .

38-26

Transmission Control Module (TCM)

Function

Transmission Control Module (TCM) receives information from components that affect shifts and forwards this information to solenoid valves, through which slide valves in valve body are controlled.

38-27

Transmission Control Module (TCM), replacing

Requirement

- Ignition switched off.

Procedure

Note:

Control module is installed under the rear seat bench.

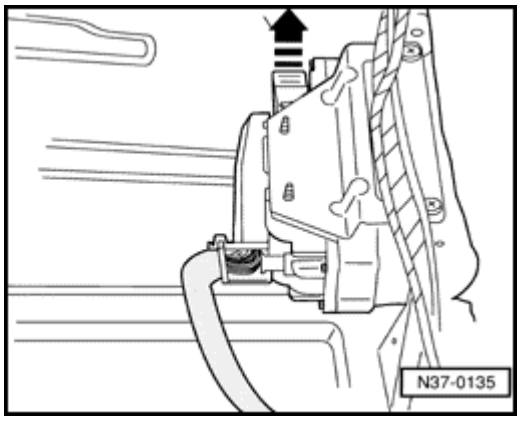

- Disengage multi-pin harness connector (arrow) then disconnect multi-pin harness connector from control module.
- Remove old control module and install new one.
- Install connector from control module and engage.
- Generate readiness code ⇒ Page ST-52 .

General information for On Board Diagnostic (OBD)

Characteristics of On Board Diagnostic (OBD)

Engine Control Modules (ECM) and Transmission Control Module (TCM) are equipped with a DTC memory.

Malfunction recognition

If malfunctions occur at the relevant emission systems or components, they are stored in DTC memory with a description of the malfunction type.

Control modules differentiate between different DTCs after evaluating the information ⇒ DTC tables, ⇒ Page ST-56 .

The stored malfunctions can be checked with a standard diagnostic tester ⇒ Page ST-22 , Diagnostic mode 3: Check DTC memory.

When harness connectors are disconnected from the Engine Control Module (ECM) or Transmission Control Module (TCM), or the battery is disconnected, all adaptation values in the control modules are erased. DTC memory content will remain intact however. If the engine is started after this, rough, uneven idle can result. In this case, the readiness code must be generated again ⇒ Page ST-52 .

ST-2

The following work steps must be performed in the described sequence after the malfunction(s) have been repaired:

1. - Check DTC memory ⇒ Page ST-22 , Diagnostic mode 3: Check DTC memory.

2. - Erase DTC memory ⇒ Page ST-26 , Diagnostic mode 4: Reset/erase diagnostic data.

3. - For completion, generate readiness code ⇒ Page ST-52 .

On Board Diagnostic (OBD), technical data

Equipment of Engine Control Module (ECM) ⇒ Page ST-4

Equipment of Transmission Control Module (TCM) ⇒ Page ST-5

Selectable diagnostic modes under address word 33 - OBD ⇒ Page ST-6 .

ST-4

Engine Control Module (ECM) equipment

Engine Code	**ABA**
System identification	Motronic M5.9
Terminals at Engine Control Module (ECM)	68
Emissions limiting values according to	Tier 1
On Board Diagnostic (OBD)	OBD II
DTC memory	Permanent memory[1)]
Memory for adaptation values	Temporary memory[2)]
Oxygen sensor control	2 sensors
Knock sensor control	Knock sensor 1
Intake manifold change-over	No
Camshaft adjustment	No
Exhaust Gas Recirculation (EGR) system	No
Boost pressure regulation	No
Secondary Air Injection (AIR) system	Yes
Electronic engine power control (EPC)	No

[1)] Independent of voltage supply.

[2)] Values are lost when voltage supply is interrupted.

ST-5

Equipment of Transmission Control Module (TCM)

Transmission code	**CLK**
System identification	01M (AG4)
Terminals at Transmission Control Module (TCM)	68
On Board Diagnostic (OBD)	OBD II
DTC memory	Permanent memory[1)]
Memory for adaptation values	No

[1)] Independent of voltage supply.

Selectable diagnostic modes under address word 33 - OBD

Note:

The conditions required for selecting the desired diagnostic mode are listed in the following table:

Diagnostic mode			Requirement:		
Selectable diagnostic modes under address word 33 - OBD			• Engine off • Ignition switched on	• Engine running at idle	• Vehicle in drive mode
Mode 1:	Check measured values	⇒ Page ST-15	Yes	Yes	Yes
Mode 2:	Check operating conditions	⇒ Page ST-19	Yes	Yes	Yes
Mode 3:	Check DTC Memory	⇒ Page ST-22	Yes[1)]	Yes	Yes
Mode 4:	Reset/erase diagnostic data	⇒ Page ST-26	Yes	Yes	Yes
Mode 5:	Check output of oxygen sensor signals[2)]	⇒ Page ST-28	Yes	Yes	Yes
Mode 6:	Check test results of components that are not continuously monitored[2)]	⇒ Page ST-36	No	Yes	Yes

[1)] Perform only with ignition switched on when engine does not start (operate starter beforehand for at least 6 seconds).

[2)] Can only be selected with Module number 10 - Engine Electronics.

ST-7

Diagnostic mode			Requirement:		
Selectable diagnostic modes under address word 33 - OBD			• Engine off • Ignition switched on	• Engine running at idle	• Vehicle in drive mode
Mode 7:	Check test results of components that are continuously monitored	⇒ Page ST-44	Yes[1)]	Yes	Yes
Mode 8:	Tank leak test[2)]	⇒ Page ST-46	No	Yes	No

[1)] Perform only with ignition switched on when engine does not start (operate starter beforehand for at least 6 seconds).

[2)] Can only be selected with Module number 10 - Engine Electronics.

ST-8

Diagnostic tester, connecting

Recommended special tools and equipment e.g.:

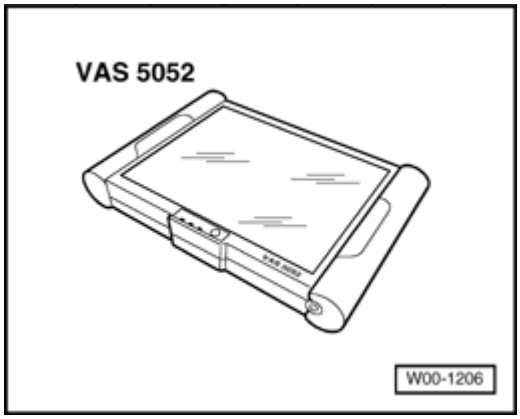

- VAS5052 Vehicle Diagnostic and Service Information System with
- VAS 5052/3 diagnostic cable

Requirements

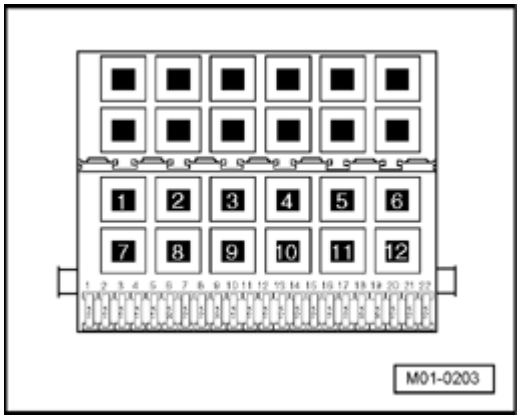

- The respective fuses of the Motronic fuel injection and ignition system must be OK:

⇒ *Electrical Wiring Diagrams, Troubleshooting & Component Locations*

- Battery voltage must be at least 11.5 volts.

ST-9

- All electrical consumers such as: lights and rear window defroster must be switched off.
- Parking brake must be engaged or else daylight driving lights will be switched on.
- For vehicles with automatic transmission, selector lever must be in -P-.
- If vehicle is equipped with an A/C system, it must be switched off.
- Ground (GND) connections between engine, transmission, and chassis must be OK.
- Ignition switched off.

Procedure

Connect diagnostic tester (VAS 5052) using (VAS 5052/3) diagnostic cable as follows:

- Unclip cover for Data Link Connector.

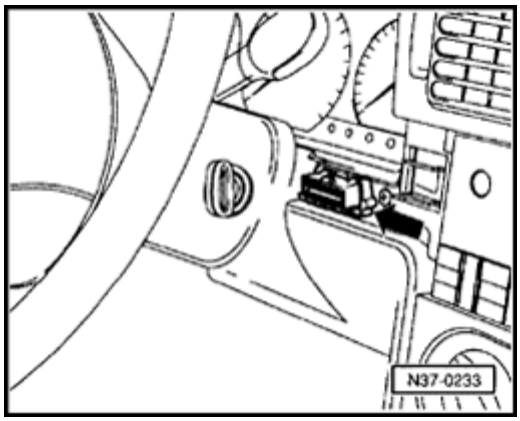

- Connect diagnostic cable connector to Data Link Connector (DLC) (arrow).

- Depending on the desired diagnostic mode, it is necessary to:switch on ignition or start engine ⇒ Page ST-6 , selectable diagnostic modes under address word 33.

Note:

- *Respective operation of the diagnostic tester:*

⇒ *Operating instructions of the diagnostic tester*

- *If no display appears on diagnostic tester, check voltage supply at Data Link Connector (DLC):*

⇒ *Electrical Wiring Diagrams, Troubleshooting & Component Locations*

ST-11

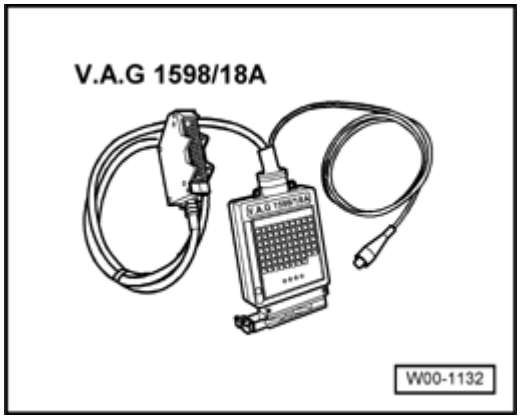

Test box, connecting for wiring test

Recommended special tools and equipment e.g.:

- V.A.G 1598/18A Test box (for Engine- and Transmission Control Module)

Requirement

- Ignition switched off.

Procedure for Engine Control Module (ECM) ⇒ Page ST-12

Procedure for Transmission Control Module (TCM) ⇒ Page ST-13

ST-12

Procedure for Engine Control Module (ECM

- Disengage connector from control module ar then disconnect it.

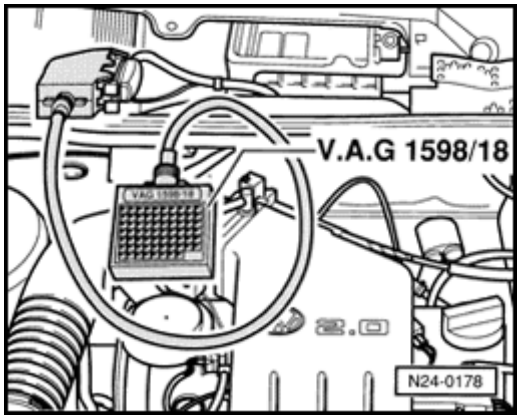

- Connect test box (V.A.G1598/18A) at contro module wiring harness.

When harness connector is disconnected from Engine Control Module (ECM) or the battery is disconnected, all adaptation values in the contr module are erased. DTC memory content will remain intact however. If the engine is started a this, rough, uneven idle can result. In this case readiness code must be generated again ⇒ Pa ST-52 .

Procedure for Transmission Control Modul (TCM)

Note:

Transmission Control Module (TCM) is installe under the rear seat bench.

- Disengage connector from control module a then disconnect it.

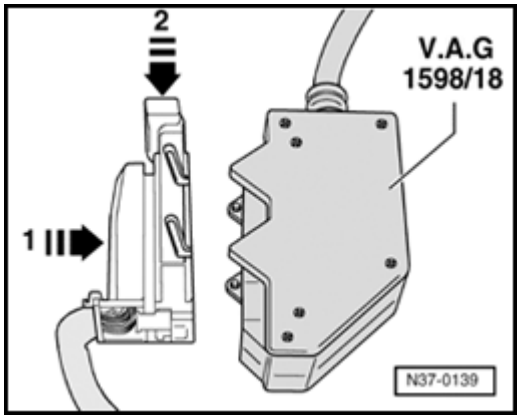

- Connect test box (V.A.G 1598/18A) to contr module wiring harness (arrow -1-) and enga (arrow -2-).

When harness connector is disconnected from Transmission Control Module (TCM) or the bat is disconnected, all adaptation values in the co module are erased. In this case, the readiness code must be generated again ⇒ Page ST-52

ST-14

Diagnostic mode, selecting

Recommended special tools and equipment e.g.:

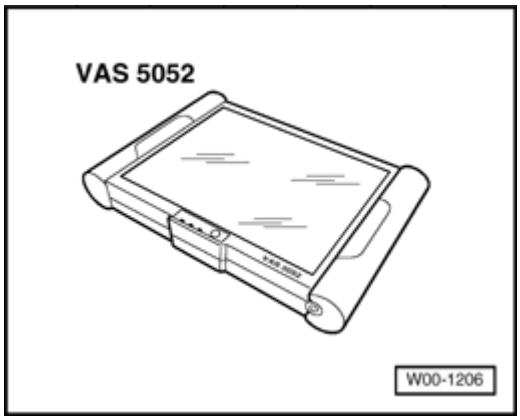

- VAS5052 Vehicle Diagnostic and Service Information System with
- VAS 5052/3 diagnostic cable

Address word 33 - On-Board Diagnostic (OBD)

Function

Under "address word 33 - On-Board Diagnostic (OBD)", various diagnostic modes for Engine Control Module (ECM) and Transmission Control Module -TCM- (in vehicles with autom. transmission) can be selected.

The following diagnostic modes monitor all components and systems which influence the emission quality.

Note:

- *Engine Control Module (ECM) reports with module number 10 - Engine Electronics.*
- *Transmission Control Module -TCM- (on vehicles with automatic transmission) reports with module number 1A - Transmission Electronics.*

Diagnostic mode 1: Check measured values

Function

In this diagnostic mode, all emissions-relevant measured values are displayed.

Requirement

- Coolant temperature must be at least 80 °C ⇒ PID 05, Coolant temperature.

Procedure

- Connect diagnostic tester ⇒ Page ST-8 .

- Depending on the desired operating condition:switch on ignition or start engine and let run at idle.

- Under address word 33, select "Diagnostic mode 1: Checking measured values."

- Select the desired measured values "PID XX".

Note:

- *The specified values for the measuring values can be found under the respective component- and function tests.*

- *The following list only serves as an overview.*

- *The measuring values are sorted according to the PID (parameter-identifications).*

ST-16

PID	Diagnostic mode	Mode number 10 Engine electronics	Mode number 1A Transmission Electronics
01:	Monitoring status since erasing DTC memory	X	X
02:	DTC which triggered the current reception of all control module information	X	---
03:	Condition of the fuel system	X	---
04:	Calculated load condition value	X	---
05:	Coolant temperature	X	X
06:	Short time gasoline-air ratio bank 1	X	---
07:	Gasoline-air ratio bank 1	X	---
10:	Fuel pressure	X	---
11:	Intake manifold pressure	X	---
12:	Engine rotations per minute (RPM)	X	X

ST-17

PID	Diagnostic mode	Mode number 10 Engine electronics	Mode number 1A Transmission Electronics
13:	Vehicle speed	X	X
14:	Valve timing adjustment at 1. cyl. to "advance"	X	---
15:	Intake Air Temperature (IAT)	X	---
16:	Air flow quantity at Mass Air Flow (MAF) sensor	X	---
17:	Throttle valve position (absolute)	X	X
18:	Availability status of secondary air	X	---
20:	Bank 1 - sensor 1	X	---
21:	Bank 1 - sensor 2	X	---
28:	OBD requirement for which this vehicle is designed	X	X

- End diagnosis and switch ignition off.

If DTCs are displayed in "PID 02":

- Repair stored malfunctions according to DTC table:

  - SAE P0xxx-DTCs ⇒ Page ST-56 ,
  - SAE P1xxx-DTCs ⇒ Page ST-75 .
  - SAE P2xxx-DTCs ⇒ Page ST-93 ,
  - SAE P3xxx-DTCs ⇒ Page ST-95 .

Note:

- *The DTC table is sorted by SAE code.*
- *"Emission"-relevant malfunctions are additionally indicated in the instrument cluster via the Malfunction Indicator Lamp (MIL).*
- *Erase DTC memory after repairing malfunction ⇒ Page ST-26 , Diagnostic mode 4: Reset/erase diagnostic data.*

Diagnostic mode 2: Check operating conditions

Function

This diagnostic mode displays the operating requirements at which an emission-relevant malfunction was detected and stored by the Engine Control Module (ECM) or Transmission Control Module (TCM).

Procedure

- Connect diagnostic tester ⇒ Page ST-8 .
- Depending on the desired operating condition:switch on ignition or start engine and let run at idle.
- Under address word 33, select "Diagnostic mode 2: Check operating conditions."
- Select the desired operating condition "PID XX".

Note:

- *The following list only serves as an overview.*
- *The operating conditions are sorted by the PID (parameter-identifications).*

ST-20

PID	Diagnostic mode	Mode number 10 Engine electronics	Mode number 1A Transmission Electronics
02:	DTC which triggered the current reception of all control module information	X	X
03:	Condition of the fuel system	X	---
04:	Calculated load condition value	X	X
05:	Coolant temperature	X	X
06:	Short time gasoline-air ratio bank 1	X	---
07:	Gasoline-air ratio bank 1	X	---
10:	Fuel pressure	X	---
11:	Intake manifold pressure	X	---
12:	Engine rotations per minute (RPM)	X	X
13:	Vehicle speed	X	X

- End diagnosis and switch ignition off.

If DTCs are displayed in "PID 02":

- Repair stored malfunctions according to DTC table:

  - SAE P0xxx-DTCs ⇒ Page ST-56 ,
  - SAE P1xxx-DTCs ⇒ Page ST-75 .
  - SAE P2xxx-DTCs ⇒ Page ST-93 ,
  - SAE P3xxx-DTCs ⇒ Page ST-95 .

Note:

- *The DTC table is sorted by SAE code.*
- *"Emission"-relevant malfunctions are additionally indicated in the instrument cluster via the Malfunction Indicator Lamp (MIL).*
- *Erase DTC memory after repairing malfunction ⇒ Page ST-26 , Diagnostic mode 4: Reset/erase diagnostic data.*

Diagnostic mode 3: Check DTC Memory

Function

This diagnostic mode indicates all stored DTCs of components and systems which are emission relevant.

Malfunction Indicator Lamp (MIL) in instrument cluster lights up for a DTC entry.

SAE Diagnostic Trouble Codes (DTCs)

The DTC always consists of a 5-digit alpha-numeric value with the following meaning:

Component group:	
P x x x x	DTC for drivetrain
Norm-Code:	
P 0 x x x	Trouble codes defined by SAE with specified malfunction texts
P 1 x x x	Additional emission relevant DTCs provided by manufacturer
P 2 x x x	DTCs defined by SAE with specified malfunction texts
P 3 x x x	Additional emission relevant DTCs provided by manufacturer

System group:	
P x 0 x x	Fuel and air mixture and additional emission regulations
P x 1 x x	Fuel and air ratios
P x 2 x x	Fuel and air ratios
P x 3 x x	Ignition system
P x 4 x x	Additional exhaust regulation
P x 5 x x	Speed and idle control
P x 6 x x	Control module and output signals
P x 7 x x	Transmission
P x 8 x x	Transmission
P x 9 x x	Control modules, input and output signals

Procedure

- Connect diagnostic tester ⇒ Page ST-8 .

- Start engine and let run at idle.

Note:

Only if engine does not start:

- Operate starter for approx. 6 seconds. Do not switch ignition off afterward.

- Under address word 33, select "Diagnostic mode 3: Check DTC memory."

  The number of stored malfunctions or "0 malfunctions detected" is displayed.

- End diagnosis and switch ignition off.

- Repair stored malfunctions according to DTC table:

  - SAE P0xxx-DTCs ⇒ Page ST-56 ,
  - SAE P1xxx-DTCs ⇒ Page ST-75 ,
  - SAE P2xxx-DTCs ⇒ Page ST-93 ,
  - SAE P3xxx-DTCs ⇒ Page ST-95 .

Note:

- *The DTC table is sorted by SAE code.*
- *"Emission"-relevant malfunctions are additionally indicated in the instrument cluster via the Malfunction Indicator Lamp (MIL).*
- *In Diagnostic mode 2, it can be determined at which operating condition a malfunction was detected and stored by the Engine Control Module (ECM) ⇒ Page ST-19 , Diagnostic mode 2: Checking operating conditions.*
- *Erase DTC memory after repairing malfunction ⇒ Page ST-26 , Diagnostic mode 4: Reset/erase diagnostic data.*

ST-25

Display example:

P0444 Evaporative Emission (EVAP) Canister Purge Regulator ValveCircuit Open

Explanation:

- P0444 = SAE diagnostic trouble code (malfunction identification number).
- Evaporative Emission (EVAP) Canister Purge Regulator Valve -N80- = malfunctioning wiring path or malfunctioning component.
- Open circuit = Malfunction type as text

Diagnostic mode 4: Reset/erase diagnostic data

Function

This diagnostic mode performs the following functions:

- All emission relevant malfunctions in DTC memory will be erased,
- The operating conditions at which a malfunction was stored will be reset ⇒ Page ST-19 , Diagnostic mode 2: Operating conditions,
- All adaptation values are being reset,
- All test results of the diagnostic functions are being reset.

Requirement

- DTC memory was erased ⇒ Page ST-22 , Diagnostic mode 3: Check DTC memory.

Procedure

- Connect diagnostic tester ⇒ Page ST-8 .

- Start engine and let run at idle.

- Under address word 33, select "Diagnostic mode 4: Reset/erase diagnostic data.

Erased or reset:

- Number and content of the DTC memories,
- Operating conditions,
- Adaptation values,
- Test results.

- End diagnosis and switch ignition off.

- Generate readiness code ⇒ Page ST-52 .

Diagnostic mode 5: Check output of oxygen sensor signals

Note:

This diagnostic mode can only be selected with Module number 10 - Engine Electronics.

Function

The static values of the oxygen sensors are indicated via this diagnostic mode.

The values of the individual oxygen sensor test results must reach the specified value or must be within the min.- and max.- limits.

Requirements

- Exhaust system must be properly sealed between catalytic converter and cylinder head.
- There must not be any DTCs stored in DTC memory ⇒ Page ST-22 , Diagnostic mode 3: Check DTC memory.
- Coolant temperature must be at least 80 ° C ⇒ Page ST-15 , Diagnostic mode 1: Check measured values; PID 05, Coolant temperature.

Procedure

- Connect diagnostic tester ⇒ Page ST-8 .

- Start engine and let run at idle.

- Under address word 33, select "Diagnostic mode 5: Check output of oxygen sensor signals".

- Select the desired output of oxygen sensor signals "Test-ID XX".

Note:

- *When selecting the diagnostic mode, the entry is always performed in "Bank 1 sensor 1".*

- *If either the V.A.G 1551/1552 Scan Tool (ST) or the VAS5051/5052 Vehicle Diagnostic, Testing and Information System is used for checking the output of oxygen sensor signals, the respective oxygen sensor can be selected by pressing buttons 1 and 2:*

  - - Button 1 = Bank 1 sensor 1,

  - - Button 2 = Bank 1 sensor 2,

Test-ID:	Evaluation of output of oxygen sensor signals	
07	Bank 1, sensor 1 and 2: Minimum voltage at sensor for test cycle	⇒ Page ST-31
08	Bank 1, sensor 1 and 2: Maximum voltage at sensor for test cycle	⇒ Page ST-33
09	Bank 1, sensor 1: Time period between sensor shift procedures	⇒ Page ST-35

- End diagnosis and switch ignition off.

ST-31

Evaluation test-ID 07 Bank 1, sensor 1 and 2: Minimum voltage at sensor for test cycle

Oxygen sensor			Specified value:
	min.	max.	
Bank 1 sensor 1		0.005 V	0.400 V
Bank 1 sensor 2		0.005 V	0.400 V

If the specified value is not reached:

- Short circuit to Ground (GND) in oxygen sensor or in wire:

- Check Oxygen Sensor (O2S) and oxygen sensor control before Three Way Catalytic Converter (TWC) ⇒ Page 24-87 .

- Check Oxygen Sensor (O2S) and oxygen sensor control behind Three Way Catalytic Converter (TWC) ⇒ Page 24-92 .

ST-32

If the specified value is exceeded:

- Oxygen sensor not ready for operation
- Oxygen sensor heater faulty:

- Check oxygen sensor heater for Oxygen Sensor (O2S) before Three Way Catalytic Converter (TWC) ⇒ Page 24-25 .

- Check oxygen sensor heater for Oxygen Sensor (O2S) behind Three Way Catalytic Converter (TWC) ⇒ Page 24-28 .

- Short circuit to B+ or open circuit in wiring in oxygen sensor or in wire:

- Check Oxygen Sensor (O2S) and oxygen sensor control before Three Way Catalytic Converter (TWC) ⇒ Page 24-87 .

- Check Oxygen Sensor (O2S) and oxygen sensor control behind Three Way Catalytic Converter (TWC) ⇒ Page 24-92 .

ST-33

Evaluation test-ID 08 Bank 1, sensor 1 and 2: Maximum voltage at sensor for test cycle

Oxygen sensor		Specified value:	
	min.	max.	
Bank 1 sensor 1		0.500 V	0.950 V
Bank 1 sensor 2		0.500 V	0.950 V

If the specified value is not reached:

- Oxygen sensor not ready for operation

- Oxygen sensor heater faulty:

- Check oxygen sensor heater for Oxygen Sensor (O2S) before Three Way Catalytic Converter (TWC) ⇒ Page 24-25 .

- Check oxygen sensor heater for Oxygen Sensor (O2S) behind Three Way Catalytic Converter (TWC) ⇒ Page 24-28 .

- Short circuit to Ground (GND) or open circuit in wiring in oxygen sensor or in wire:

- Check Oxygen Sensor (O2S) and oxygen sensor control before Three Way Catalytic Converter (TWC) ⇒ Page 24-87 .

- Check Oxygen Sensor (O2S) and oxygen sensor control behind Three Way Catalytic Converter (TWC) ⇒ Page 24-92 .

ST-34

If the specified value is exceeded:

- Short circuit to B+ in oxygen sensor or in wire:

- Check Oxygen Sensor (O2S) and oxygen sensor control before Three Way Catalytic Converter (TWC) ⇒ Page 24-87 .

- Check Oxygen Sensor (O2S) and oxygen sensor control behind Three Way Catalytic Converter (TWC) ⇒ Page 24-92 .

ST-35

Evaluation test-ID 09: Bank 1, sensor 1: Time period between sensor shift procedures

Oxygen sensor			Specified value:
	min.	max.	
Bank 1 sensor 1		0/s	10/s

If the specified value is exceeded:

- Oxygen sensor faulty:

- Check Oxygen Sensor (O2S) and oxygen sensor control before Three Way Catalytic Converter (TWC) ⇒ Page 24-87 .

Diagnostic mode 6: Check test results of components that are not continuously monitored

Note:

This diagnostic mode can only be selected with Module number 10 - Engine Electronics.

Function

This diagnostic mode displays the test results of emission relevant components and systems which are not continuously monitored.

The values of the individual test results must reach the specified value or must be within the min.- and max.- limits.

Test-ID	Components	Test
01:	Catalytic converter monitoring	⇒ Page ST-37
03:	Secondary Air Injection (AIR) system	⇒ Page ST-39
05:	Tank ventilation system	⇒ Page ST-41

Test-ID 01: Catalytic converter monitoring

Test requirements

- There must not be any DTCs stored in DTC memory ⇒ Page ST-22 , Diagnostic mode 3: Check DTC memory.

- Coolant temperature must be at least 80 °C ⇒ Page ST-15 , Diagnostic mode 1: Check measured values; PID 05, Coolant temperature.

Procedure

- Read readiness code ⇒ Page ST-50 .

- Let engine run at idle.

- Under address word 33, select "Diagnostic mode 6: Check test results of components that are not continuously monitored".

- Select the "Test-ID 01: Catalytic converter" off.

- Check specified values at idle.

Evaluation test-ID 01: Catalytic converter monitoring

Catalytic converter monitoring			Specified value:
	min.	max.	
Aging value		- - -	64.00

- End diagnosis and switch ignition off.

If specified values are not obtained:

- Replace catalytic converter ⇒ Page 26-4 , item 5 .

- Erase DTC memory of Engine Control Module (ECM) ⇒ Page ST-26 , Diagnostic mode 4: Reset/erase diagnostic data.

- Generate readiness code ⇒ Page ST-52 .

Test-ID 03: Secondary Air Injection (AIR) system

Test requirements

- There must not be any DTCs stored in DTC memory ⇒ Page ST-22 , Diagnostic mode 3: Check DTC memory.
- Intake air temperature 5 to 35 °C ⇒ Page ST-15 , Diagnostic mode 1: Check measured values; PID 15: Intake Air Temperature (IAT)
- Coolant temperature approx. intake air temperature (5 to 35 °C) ⇒ Page ST-15 , Diagnostic mode 1: Check measured values; PID 05, Coolant temperature.

Procedure

- Read readiness code ⇒ Page ST-50 .
- Let engine run at idle.
- Under address word 33, select "Diagnostic mode 6: Check test results of components that are not continuously monitored".
- Select the "Test-ID 03: Secondary Air Injection (AIR) system"
- Check specified values at idle.

Evaluation test-ID 03: Secondary Air Injection (AIR) system

Secondary Air Injection (AIR) system			Specified value:
	min.	max.	
♦ Reduced secondary air mass		32.0	---

- End diagnosis and switch ignition off.

If specified values are not obtained:

- Check secondary air system for proper seal ⇒ Page 26-18 .
- Check Secondary Air Injection (AIR) Solenoid Valve -N112- ⇒ Page 26-20 .
- Check Secondary Air Injection (AIR) Pump Motor -V101- ⇒ Page 26-23 .
- Check combination valve ⇒ Page 26-28 .
- Erase DTC memory of Engine Control Module (ECM) ⇒ Page ST-26 , Diagnostic mode 4: Reset/erase diagnostic data.
- Generate readiness code ⇒ Page ST-52 .

Test-ID 05: Tank ventilation system

Test requirements

- There must not be any DTCs stored in DTC memory ⇒ Page ST-22 , Diagnostic mode 3: Check DTC memory.

- Coolant temperature must be at least 80 °C ⇒ Page ST-15 , Diagnostic mode 1: Check measured values; PID 05, Coolant temperature.

Procedure

- Read readiness code ⇒ Page ST-50 .

- Let engine run at idle.

- Under address word 33, select "Diagnostic mode 6: Check test results of components that are not continuously monitored".

- Select the "Test-ID 05: Tank ventilation system".

- Check specified values at idle.

ST-42

Evaluation test-ID 05: Tank ventilation system

Tank ventilation system	Specified value:	
Evaporative Emission (EVAP) Canister Purge Regulator Valve -N80-	**min.**	**max.**
Active test: ♦ Deviation of oxygen sensor control in direction "lean" ♦ Can only check OK, short test	---	246.0
Active test: ♦ Deviation of oxygen sensor control in direction "rich" ♦ Can only check OK, short test	10.0	---
Active test: ♦ Air balance at idle OK, also short test	1229.0	---
Tank ventilation system	**Specified value:**	
Tank seal	**min.**	**max.**
Opening time	160.0	---

- End diagnosis and switch ignition off.

If specified values are not obtained:

- Fuel tank ventilation, checking ⇒ Page 20-31 .
- Check Evaporative Emission (EVAP) Canister Purge Regulator Valve -N80- ⇒ Page 20-34 .
- Erase DTC memory of Engine Control Module (ECM) ⇒ Page ST-26 , Diagnostic mode 4: Reset/erase diagnostic data.
- Generate readiness code ⇒ Page ST-52 .

Diagnostic mode 7: Check test results

Function

This diagnostic mode indicates all stored DTCs of components and systems which are continuously monitored.

- Exhaust Malfunction Indicator Lamp (MIL) is still activated in instrument cluster.

- A malfunction is stored in diagnostic mode 7, however this malfunction is not yet displayed in "Diagnostic mode 3: Check DTC memory".

Requirement

- There must not be any DTCs stored in DTC memory ⇒ Page ST-22 , Diagnostic mode 3: Check DTC memory.

Procedure

- Connect diagnostic tester ⇒ Page ST-8 .

- Start engine and let run at idle.

Note:

Only if engine does not start:

- Operate starter for approx. 6 seconds. Do not switch ignition off afterward.

- Under address word 33, select "Diagnostic mode 7: Check test results of components that are continuously monitored".

  The number of stored malfunctions or "0 malfunctions detected" is displayed.

- End diagnosis and switch ignition off.

- Repair stored malfunctions according to DTC table:

  - SAE P0xxx-DTCs ⇒ Page ST-56 ,
  - SAE P1xxx-DTCs ⇒ Page ST-75 .
  - SAE P2xxx-DTCs ⇒ Page ST-93 ,
  - SAE P3xxx-DTCs ⇒ Page ST-95 .

Note:

- *The DTC table is sorted by SAE code.*
- *Erase DTC memory after repairing malfunction ⇒ Page ST-26 , Diagnostic mode 4: Reset/erase diagnostic data.*

Diagnostic mode 8: Tank leak test

Note:

This diagnostic mode can only be selected with Module number 10 - Engine Electronics.

Function

This diagnostic mode checks the fuel system for leaks.

Note:

- *Evaporative Emission (EVAP) Canister Purge Regulator Valve -N80- seals the fuel supply system.*
- *Using engine leak detection spray (e.g.: G 001 800 A1) leaks can be detected.*

Test requirements

- There must not be any DTCs stored in DTC memory ⇒ Page ST-22 , Diagnostic mode 3: Check DTC memory.
- Coolant temperature must be 80 to 110 °C ⇒ Page ST-15 , Diagnostic mode 1: Check measured values; PID 05, Coolant temperature.
- Intake air temperature must not be above the maximum of 60 ° C ⇒ Page ST-15 , Diagnostic mode 1: Check measuring values; PID 15, Intake air temperature.

Function test

- Connect diagnostic tester ⇒ Page ST-8 .
- Start engine and let run 15 minutes at idle.
- Under address word 33, select "Diagnostic mode 8: Tank leak test".
- Measuring value "Test-ID 01: select Tank leak test".
- Check specified value of tank leak test at idle.

Evaluation test-ID 01: Tank leak test

Tank leak test	Specified value:
Test function: ♦ Is being initiated, please wait ♦ Aborted ♦ Active ♦ Off	Test function active

Note:

- *During tank leak test, Engine Control Module (ECM) limits "test function active" to approx. 12 minutes.*
- *If the accelerator pedal is depressed during the test, the test will be aborted.*
- *To repeat the tank leak test, switch ignition off and start engine again and let run for 15 minutes at idle.*

- End diagnosis and switch ignition off.

If a leak is detected:

- Fuel tank ventilation, checking ⇒ Page 20-31 .
- Check Evaporative Emission (EVAP) Canister Purge Regulator Valve -N80- ⇒ Page 20-34 .
- Erase DTC memory of Engine Control Module (ECM) ⇒ Page ST-26 , Diagnostic mode 4: Reset/erase diagnostic data.
- Generate readiness code ⇒ Page ST-52 .

Readiness code

Function

The readiness code is an 8 digit number block that indicates the results of an emission relevant On Board Diagnostic (OBD).

When the diagnostic for a system (e.g.: secondary air system) has run through successfully, the respective digit of the number block is set from 1 to 0.

On Board Diagnostics are performed at regular intervals during normal vehicle operation. After repairing an exhaust relevant system, the readiness code should be generated via a road test to ensure that these systems are working according to specifications. If a malfunction is recognized during diagnostic, it is stored in DTC memory.

The readiness code is erased every time DTC memory is erased or when voltage supply is interrupted. DTC memory should therefore only be erased when there are DTCs stored.

Read readiness code

Requirements

- There must not be any DTCs stored in DTC memory ⇒ Page ST-22 , Diagnostic mode 3: Check DTC memory.

- Coolant temperature must be at least 80 °C ⇒ Page ST-15 , Diagnostic mode 1: Check measured values; PID 05, Coolant temperature.

Procedure

- Connect diagnostic tester ⇒ Page ST-8 .

- Start engine and let run at idle.

- Under address word 33, select "Diagnostic mode 1: Checking measured values."

- Select desired measuring value "PID 01".

- Observe the right 8-digit number block:

  If all diagnoses have run through successfully, the 8-digit number block

  Specified value: 00000000 must be displayed.

Evaluation PID 01: System status-information (right 8-digit number block:)

Meaning if display position = 0								
1	2	3	4	5	6	7	8	Diagnostic function
0								Exhaust gas recirculation OK • not available/always "0"
	0							Oxygen sensor heater OK
		0						Oxygen sensors OK
			0					A/C system OK • not available/always "0"
				0				Secondary Air Injection (AIR) system OK
					0			EVAP canister system (tank ventilation system) OK
						0		Catalytic converter heater OK • not available/always "0"
							0	Catalytic converter OK

If a 1 is displayed instead of a 0 in the 8-digit number block:

- Generate readiness code ⇒ Page ST-52 .

ST-52

Readiness code, generating

Requirements

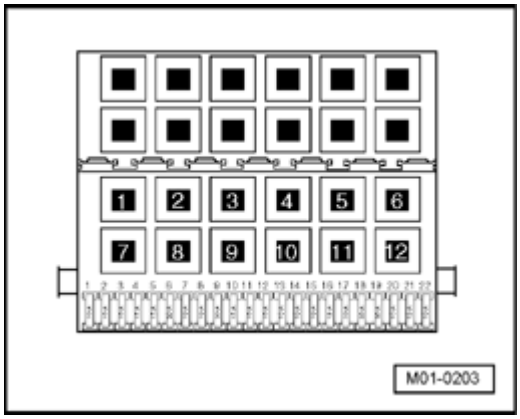

- The respective fuses of the Motronic fuel injection and ignition system must be OK:

⇒ *Electrical Wiring Diagrams, Troubleshooting & Component Locations*

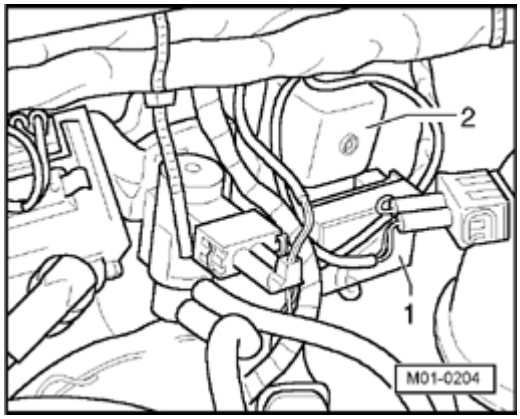

- Fuse -1- and Secondary Air Injection (AIR) pump relay -2- (in engine compartment at bulkhead) must be OK:

⇒ *Electrical Wiring Diagrams, Troubleshooting & Component Locations*

- Battery voltage must be at least 11.5 volts.
- All electrical consumers such as: lights and rear window defroster must be switched off.
- If vehicle is equipped with an A/C system, it must be switched off.

- Parking brake must be engaged or else daylight driving lights will be switched on.
- Ground (GND) connections between engine, transmission and chassis must be OK.
- There must not be any DTCs stored in DTC memory ⇒ Page ST-22 , Diagnostic mode 3: Check DTC memory.
- Intake air temperature 5 to 60 °C ⇒ Page ST-15 , Diagnostic mode 1: Check measured values; PID 15: Intake Air Temperature (IAT)

Procedure

- Connect diagnostic tester ⇒ Page ST-8 .
- Turn ignition on for 30 seconds.
- Start engine and let run at idle.

Check fuel tank ventilation.

- Increase engine speed for 90 seconds to 3000 to 3500 RPM to warm up the catalytic converter.

Note:

Engine speed ⇒ Page ST-15 , Diagnostic mode 1: Check measuring values; PID 12, engine rotations per minute (RPM).

Testing Secondary Air Injection (AIR) system for proper seal.

- Let engine run at idle for 1 minute.

Testing oxygen sensors for aging.

- Increase engine speed to 2200 to 3300 RPM for 3 minutes.

Testing oxygen sensors in partial throttle range

- Perform a road test.

  The following operating conditions must be met during this road test:

  - Drive for 15 minutes in 3rd gear or in driving mode "3" on a level driving surface at a constant vehicle speed with an engine speed of 2000 to 2800 RPM.

Observe the safety precautions that apply to road tests ⇒ Page 24-21 .

Note:

- *Vehicle speed ⇒ Page ST-15 , Diagnostic mode 1: Check measuring values; PID 13, Vehicle speed.*

- *Engine speed ⇒ Page ST-15 , Diagnostic mode 1: Check measuring values; PID 12, engine rotations per minute (RPM).*

- Accelerate vehicle uniformly, not at Wide Open Throttle (WOT).

  - ♦ Avoid coasting operation (throttle valve closed) while driving.

- After 15 minutes, downshift until an engine speed of 2800 to 3500 RPM has been reached.

- Drive in deceleration mode at an engine speed up to approx. 1800 RPM.

- Park vehicle and let engine run at idle for 15 minutes.

  - ♦ Accelerator pedal must not be operated during this time.

- Read readiness code ⇒ Page ST-50 .

In 8-digit number block:

- ♦ Display position 5: Secondary Air Injection (AIR) system

and/or

- ♦ Display position 6: EVAP canister system

a 1 instead of 0 is displayed:

- Repeat complete work procedure ⇒ Page ST-53

Diagnostic Trouble Code (DTC) tables:

SAE P0xxx-DTCs

Fuel and air ratios and additional emission regulations

SAE-DTC	DTC text	Corrective action
P0030	HO2S Heater Control Circuit, Bank 1 Sensor 1	- Check oxygen sensor heater for oxygen sensor before catalytic converter ⇒ Page 24-25 - Check oxygen sensor and oxygen sensor control before catalytic converter ⇒ Page 24-87
P0031	HO2S Heater Control Circuit Low, Bank 1 Sensor 1	
P0032	HO2S Heater Control Circuit High, Bank 1 Sensor 1	
P0036	HO2S Heater Control Circuit, Bank 1 Sensor 2	- Check oxygen sensor heater for oxygen sensor behind catalytic converter ⇒ Page 24-28 - Check oxygen sensor and oxygen sensor control behind catalytic converter ⇒ Page 24-92
P0037	HO2S Heater Control Circuit Low, Bank 1 Sensor 2	
P0038	HO2S Heater Control Circuit High, Bank 1 Sensor 2	

ST-57

Fuel and air ratios

SAE-DTC	DTC text	Corrective action
P0101	Mass or Volume Air Flow Circuit Range/Performance	- Check Mass Air Flow (MAF) Sensor -G70- ⇒ Page 24-31 - Check intake air system for leaks (false air) ⇒ Page 24-84
P0102	Mass or Volume Air Flow Circuit Low Input	
P0103	Mass or Volume Air Flow Circuit High Input	
P0106	Manifold Absolute Pressure/Barometric Pressure Circuit Range/Performance	- Replace Motronic Engine Control Module (ECM) -J220- ⇒ Page 24-105
P0107	Manifold Absolute Pressure/Barometric Pressure Circuit Low Input	
P0108	Manifold Absolute Pressure/Barometric Pressure Circuit High Input	
P0112	Intake Air Temperature Sensor 1 Circuit Low[1)]	- Check Intake Air Temperature (IAT) Sensor -G72- ⇒ Page 24-53
P0113	Intake Air Temperature Sensor 1 Circuit High[2)]	

[1)] The correct DTC text is: Intake Air Temperature Sensor 1 Circuit Low

[2)] The correct DTC text is: Intake Air Temperature Sensor 1 Circuit High

SAE-DTC	DTC text	Corrective action
P0116	Engine Coolant Temperature Circuit Range/Performance	- Check Engine Coolant Temperature (ECT) Sensor -G62- ⇒ Page 24-44 - Check coolant regulator: ⇒ *Repair Manual, 2.0 Liter 4-Cyl. 2V Engine Mechanical, Engine Code(s): ABA m.y. 1995, Repair Group 19; Cooling system components, removing and installing*
P0117	Engine Coolant Temperature Circuit Low	
P0118	Engine Coolant Temperature Circuit High	
P0120	Throttle/Pedal Position Sensor/Switch "A" Circuit	- Check Throttle Valve Control Module -J338- ⇒ Page 24-36
P0121	Throttle/Pedal Position Sensor/Switch "A" Circuit Range/Performance	
P0122	Throttle/Pedal Position Sensor/Switch "A" Circuit Low	
P0123	Throttle/Pedal Position Sensor/Switch "A" Circuit High	
P0125	Insufficient Coolant Temperature for Closed Loop Fuel Control	- Let engine run at idle until coolant temperature for oxygen sensor control is reached

ST-59

SAE-DTC	DTC text	Corrective action
P0130	O2 Sensor Circuit Bank 1 Sensor 1	- Check Oxygen Sensor (O2S) and oxygen sensor control before Three Way Catalytic Converter (TWC) ⇒ Page 24-87
P0131	O2 Sensor Circuit Low Voltage, Bank 1 Sensor 1	
P0132	O2 Sensor Circuit High Voltage, Bank 1 Sensor 1	
P0133	O2 Sensor Circuit Slow Response, Bank 1 Sensor 1	
P0134	O2 Sensor Circuit No Activity Detected, Bank 1 Sensor 1	
P0135	O2 Sensor Heater Circuit, Bank 1 Sensor 1	- Check oxygen sensor heater for Oxygen Sensor (O2S) before Three Way Catalytic Converter (TWC) ⇒ Page 24-25
P0136	O2 Sensor Circuit Bank 1 Sensor 2	- Check Oxygen Sensor (O2S) and oxygen sensor control behind Three Way Catalytic Converter (TWC) ⇒ Page 24-92
P0137	O2 Sensor Circuit Low Voltage, Bank 1 Sensor 2	
P0138	O2 Sensor Circuit High Voltage, Bank 1 Sensor 2	
P0139	O2 Sensor Circuit Slow Response Bank 1 Sensor 2	
P0140	O2 Sensor Circuit No Activity Detected, Bank 1 Sensor 2	
P0141	O2 Sensor Heater Circuit, Bank 1 Sensor 2	- Check oxygen sensor heater for Oxygen Sensor (O2S) behind Three Way Catalytic Converter (TWC) ⇒ Page 24-28

ST-60

SAE-DTC	DTC text	Corrective action
P0171	System Too Lean, Bank 1	- Fuel pressure regulator and residual pressure, checking ⇒ Page 24-84 - Check fuel injectors (Cylinder 1 Fuel Injector -N30- to Cylinder 4 Fuel Injector -N33-) ⇒ Page 24-65 - Check intake air system for leaks (false air) ⇒ Page 24-84 - Fuel Pump (FP) -G6-, checking ⇒ Page 20-15 - Check exhaust system for proper seal ⇒ Page 26-1 , Components of the exhaust system, removing and installing - Check Secondary Air Injection (AIR) system for proper seal ⇒ Page 26-18 - Check vacuum lines for leaks

ST-61

SAE- DTC	DTC text	Corrective action
P0172	System Too Rich, Bank 1	- Fuel pressure regulator and residual pressure, checking ⇒ Page 24-84 - Check fuel injectors (Cylinder 1 Fuel Injector -N30- to Cylinder 4 Fuel Injector -N33-) ⇒ Page 24-65 - Check Oxygen Sensor (O2S) and oxygen sensor control before Three Way Catalytic Converter (TWC) ⇒ Page 24-87 - Check Oxygen Sensor (O2S) and oxygen sensor control behind Three Way Catalytic Converter (TWC) ⇒ Page 24-92 - Check Evaporative Emission (EVAP) Canister Purge Regulator Valve -N80- ⇒ Page 20-34

Fuel and air ratios

SAE-DTC	DTC text	Corrective action
P0201	Injector Circuit/Open - Cylinder 1	- Check Cylinder 1 Fuel Injector -N30- to Cylinder 4 Fuel Injector -N33-, Cylinder 5 Fuel Injector -N83- to Cylinder 8 Fuel Injector -N86- ⇒ Page 24-65
P0202	Injector Circuit/Open - Cylinder 2	
P0203	Injector Circuit/Open - Cylinder 3	
P0204	Injector Circuit/Open - Cylinder 4	
P0219	Engine Overspeed Condition	- Repair mechanical damage if necessary - Erase DTC memory ⇒ Page ST-26 , Diagnostic mode 4: Reset/erase diagnostic data
P0230	Fuel Pump Primary Circuit	- Check activation of Fuel Pump (FP) Relay -J17- according to wiring diagram: ⇒ *Electrical Wiring Diagrams, Troubleshooting &Component Locations*

ST-63

SAE-DTC	DTC text	Corrective action
P0261	Cylinder 1 Injector Circuit Low	- Check Cylinder 1 Fuel Injector -N30- to Cylinder 4 Fuel Injector -N33- ⇒ Page 24-65
P0262	Cylinder 1 Injector Circuit High	
P0264	Cylinder 2 Injector Circuit Low	
P0265	Cylinder 2 Injector Circuit High	
P0267	Cylinder 3 Injector Circuit Low	
P0268	Cylinder 3 Injector Circuit High	
P0270	Cylinder 4 Injector Circuit Low	
P0271	Cylinder 4 Injector Circuit High	

ST-64

Ignition system

SAE-DTC	DTC text	Corrective action
P0300	Random/Multiple Cylinder Misfire Detected	- Check fuel injectors (Cylinder 1 Fuel Injector -N30- to Cylinder 4 Fuel Injector -N33-) ⇒ Page 24-65 - Check spark plugs ⇒ Page 28-9 , test data, spark plugs - Check Ignition Coil -N152- ⇒ Page 28-23 - Check Ignition Coil Power Output Stage -N157- ⇒ Page 28-25
P0301	Cylinder 1 Misfire Detected	
P0302	Cylinder 2 Misfire Detected	
P0303	Cylinder 3 Misfire Detected	
P0304	Cylinder 4 Misfire Detected	
P0321	Ignition/Distributor Engine Speed Input Circuit Range/Performance	- Check Engine Speed (RPM) Sensor -G28- ⇒ Page 24-61
P0322	Ignition/Distributor Engine Speed Input Circuit No Signal	
P0324	Knock Control System Error	- Check Knock Sensor (KS) 1 -G61- ⇒ Page 28-20 - Loosen knock sensor and tighten again to 20 Nm - Eliminate abnormal engine noise (components loose, bracket/bolts broken) - Change fuel types

ST-65

SAE-DTC	DTC text	Corrective action
P0327	Knock Sensor 1 Circuit Low, Bank 1 or Single Sensor	- Check Knock Sensor (KS) 1 -G61- ⇒ Page 28-20 - Loosen knock sensors and tighten to 20 Nm again
P0328	Knock Sensor 1 Circuit High, Bank 1 or Single Sensor	
P0340	Camshaft Position Sensor "Intake" Circuit, Bank 1 or Single Sensor	- Check Camshaft Position (CMP) Sensor -G40- ⇒ Page 28-16
P0341	Camshaft Position Sensor "Intake" Circuit Range/Performance, Bank 1 or Single Sensor	
P0342	Camshaft Position Sensor "Intake" Circuit Low, Bank 1 or Single Sensor	
P0343	Camshaft Position Sensor "Intake" Circuit High, Bank 1 or Single Sensor	
P0351	Ignition Coil "A" Primary/Secondary Circuit	- Check Ignition Coil -N152- ⇒ Page 28-23
P0352	Ignition Coil "B" Primary/Secondary Circuit	- Check Ignition Coil Power Output Stage -N157- ⇒ Page 28-25
P0353	Ignition Coil "C" Primary/Secondary Circuit	
P0354	Ignition Coil "D" Primary/Secondary Circuit	

Additional exhaust regulation

SAE-DTC	DTC text	Corrective action
P0411	Secondary Air Injection System Incorrect Flow Detected	- Check Secondary Air Injection (AIR) Pump Motor -V101- ⇒ Page 26-23 - Check Secondary Air Injection (AIR) Solenoid Valve -N112- ⇒ Page 26-20 - Check combination valve ⇒ Page 26-28 - Check Secondary Air Injection (AIR) system for proper seal ⇒ Page 26-18
P0412	Secondary Air Injection System Switching Valve "A" Circuit	- Check Secondary Air Injection (AIR) Solenoid Valve -N112- ⇒ Page 26-20
P0413	Secondary Air Injection System Switching Valve "A" Circuit Open	
P0414	Secondary Air Injection System Switching Valve "A" Circuit Shorted	
P0418	Secondary Air Injection System Control "A" Circuit	- Check activation of Secondary Air Injection (AIR) Pump Relay -J299- according to wiring diagram: ⇒ *Electrical Wiring Diagrams, Troubleshooting &Component Locations*

ST-67

SAE-DTC	DTC text	Corrective action
P0420	Catalyst System Efficiency Below Threshold, Bank 1	- Check Oxygen Sensor (O2S) and oxygen sensor control before Three Way Catalytic Converter (TWC) ⇒ Page 24-87 - Check Oxygen Sensor (O2S) and oxygen sensor control behind Three Way Catalytic Converter (TWC) ⇒ Page 24-92 - Check catalytic converter ⇒ Page 26-11
P0422	Main Catalyst Efficiency Below Threshold, Bank 1	
P0440	Evaporative Emission System	- Check Evaporative Emission (EVAP) Canister Purge Regulator Valve -N80- ⇒ Page 20-31 - Fuel tank ventilation, checking ⇒ Page 20-31 .
P0441	Evaporative Emission System Incorrect Purge Flow	
P0442	Evaporative Emission System Leak Detected (small leak)	
P0443	Evaporative Emission System Purge Control Valve Circuit	
P0444	Evaporative Emission System Purge Control Valve Circuit Open	
P0445	Evaporative Emission System Purge Control Valve Circuit Shorted	
P0458	Evaporative Emission System Purge Control Valve Circuit Low	
P0459	Evaporative Emission System Purge Control Valve Circuit High	

Speed and idle control

SAE-DTC	DTC text	Corrective action
P0501	Vehicle Speed Sensor "A" Range/Performance	- Check speed signal ⇒ Page 24-106
P0506	Idle Air Control System RPM Lower Than Expected	- Throttle Valve Control Module -J338-, checking ⇒ Page 24-36
P0507	Idle Air Control System RPM Higher Than Expected	
P0510	Closed Throttle Position Switch	
P0562	System Voltage Low	- Check Transmission Control Module (TCM) -J217- according to wiring diagram: ⇒ *Electrical Wiring Diagrams, Troubleshooting &Component Locations*
P0563	System Voltage High	

ST-69

Control module and output signals

SAE-DTC	DTC text	Corrective action
P0601	Internal Control Module Memory Check Sum Error	- Replace Motronic Engine Control Module (ECM) -J220- ⇒ Page 24-105
P0602	Control Module Programming Error	
P0605	Internal Control Module Read Only Memory (ROM) Error	
	♦ With module number 10 - Engine Electronics	- Replace Motronic Engine Control Module (ECM) -J220- ⇒ Page 24-105
	♦ With module number 1A - Transmission Electronics	- Replace Transmission Control Module (TCM) -J217- ⇒ Page 38-27
P0606	ECM/PCM Processor	- Replace Motronic Engine Control Module (ECM) -J220- ⇒ Page 24-105
P0614	ECM / TCM Incompatible	- Replace Transmission Control Module (TCM) -J217- ⇒ Page 38-27
P0638	Throttle Actuator Control Range/Performance, Bank 1	- Check Throttle Valve Control Module -J338- ⇒ Page 24-36
P0642	Sensor Reference Voltage "A" Circuit Low	

ST-70

Transmission

SAE-DTC	DTC text	Corrective action
P0700	Transmission Control System (MIL Request)	- Replace Transmission Control Module (TCM) -J217- ⇒ Page 38-27
P0702	Transmission Control System Electrical	
P0705	Transmission Range Sensor Circuit Malfunction (PRNDL Input)	- Check Multi-Function Transmission Range (TR) Switch -F125- ⇒ Page 38-10
P0706	Transmission Range Sensor Circuit Range/Performance	
P0710	Transmission Fluid Temperature Sensor "A" Circuit	- Check ATF level: ⇒ *Repair Manual, 4 Spd. Automatic Transmission 01M, Repair Group 37; checking ATF level and topping off* - Check Transmission Fluid Temperature Sensor -G93- ⇒ Page 38-19
P0711	Transmission Fluid Temperature Sensor "A" Circuit Range/Performance	
P0712	Transmission Fluid Temperature Sensor "A" Circuit Low	
P0713	Transmission Fluid Temperature Sensor "A" Circuit High	
P0714	Transmission Fluid Temperature Sensor "A" Circuit Intermittent	

ST-71

SAE-DTC	DTC text	Corrective action
P0715	Input/Turbine Speed Sensor "A" Circuit	- Check Transmission Vehicle Speed Sensor (VSS) -G38- ⇒ Page 38-13
P0722	Output Speed Sensor Circuit No Signal	- Check Vehicle Speed Sensor (VSS) -G68- ⇒ Page 38-16
P0725	Engine Speed Input Circuit	- Check wire connection between Motronic Engine Control Module (ECM) -J220- and Transmission Control Module (TCM) -J217- according to wiring diagram: ⇒ *Electrical Wiring Diagrams, Troubleshooting &Component Locations* - Check Engine Speed (RPM) Sensor -G28- ⇒ Page 24-61
P0726	Engine Speed Input Circuit Range/Performance	
P0727	Engine Speed Input Circuit No Signal	

1) The correct DTC text is: Input/Turbine Speed Sensor "A" Circuit

2) The correct DTC text is: Output Speed Sensor Circuit No Signal

SAE-DTC	DTC text	Corrective action
P0730	Incorrect Gear Ratio	- Check ATF level. ⇒ *Repair Manual, 4 Spd. Automatic Transmission 01M, Repair Group 37; checking ATF level and topping off* - Check Solenoid Valves (-N88- to -N94-) ⇒ Page 38-22 - Check Transmission Vehicle Speed Sensor (VSS) -G38- ⇒ Page 38-13 - Check Vehicle Speed Sensor (VSS) -G68- ⇒ Page 38-16 - Mechanical malfunction in transmission
P0731	Gear 1 Incorrect Ratio	
P0732	Gear 2 Incorrect Ratio	
P0733	Gear 3 Incorrect Ratio	
P0734	Gear 4 Incorrect Ratio	
P0740	Torque Converter Clutch Circuit/Open	- Check ATF level. ⇒ *Repair Manual, 4 Spd. Automatic Transmission 01M, Repair Group 37; checking ATF level and topping off* - Mechanical malfunction in transmission

ST-73

SAE-DTC	DTC text	Corrective action
P0748	Pressure Control Solenoid "A" Electrical	- Check Solenoid Valve 6 -N93- ⇒ Page 38-22 , Checking solenoid valves in valve body
P0753	Shift Solenoid "A" Electrical	- Check Solenoid Valve 1 -N88- ⇒ Page 38-22 , Checking solenoid valves in valve body
P0758	Shift Solenoid "B" Electrical	- Check Solenoid Valve 2 -N89- ⇒ Page 38-22 , Checking solenoid valves in valve body
P0763	Shift Solenoid "C" Electrical	- Check Solenoid Valve 3 -N90- ⇒ Page 38-22 , Checking solenoid valves in valve body
P0768	Shift Solenoid "D" Electrical	- Check Solenoid Valve 4 -N91- ⇒ Page 38-22 , Checking solenoid valves in valve body
P0773	Shift Solenoid "E" Electrical	- Check Solenoid Valve 5 -N92- ⇒ Page 38-22 , Checking solenoid valves in valve body
P0785	Shift/Timing Solenoid	- Check solenoid valves ⇒ Page 38-22 , Checking solenoid valves in valve body

ST-74

Transmission

SAE-DTC	DTC text	Corrective action
P0811	Excessive Clutch Slippage	- Check ATF level. ⇒ *Repair Manual, 4 Spd. Automatic Transmission 01M, Repair Group 37; checking ATF level and topping off* - Check Solenoid Valve 3 -N90- ⇒ Page 38-22 , Checking solenoid valves in valve body - Check Solenoid Valve 5 -N92- ⇒ Page 38-22 , Checking solenoid valves in valve body - Mechanical malfunction in transmission
P0884	TCM Power Input Signal Intermittent	- Check Transmission Control Module (TCM) -J217- according to wiring diagram: ⇒ *Electrical Wiring Diagrams, Troubleshooting &Component Locations*
P0886	TCM Power Relay Control Circuit Low	
P0887	TCM Power Relay Control Circuit High	

SAE P1xxx-DTCs

Fuel and air ratios

SAE-DTC	DTC text	Corrective action
P1102	HO2S Heater Control Circuit (Bank 1 Sensor 1) High	- Check oxygen sensor heater for oxygen sensor before catalytic converter ⇒ Page 24-25 - Check oxygen sensor and oxygen sensor control before catalytic converter ⇒ Page 24-87
P1103	Bank 1-probe 1, heating circuit output too low	
P1105	HO2S Heater Control Circuit (Bank 1 Sensor 2) High	- Check oxygen sensor heater for oxygen sensor behind catalytic converter ⇒ Page 24-28
P1111	Oxygen sensor control (Bank 1) System too lean	- Check fuel pressure regulator and residual pressure ⇒ Page 24-78 - Check Cylinder 1 Fuel Injector -N30- to Cylinder 4 Fuel Injector -N33- ⇒ Page 24-65 - Check Fuel Pump (FP) -G6- ⇒ Page 20-15 - Check intake system for leaks (false air) ⇒ Page 24-84 - Check vacuum lines for leaks

ST-76

SAE-DTC	DTC text	Corrective action
P1112	Oxygen sensor control (Bank 1) System too rich	- Check fuel pressure regulator and residual pressure ⇒ Page 24-78 - Check Cylinder 1 Fuel Injector -N30- to Cylinder 4 Fuel Injector -N33- ⇒ Page 24-65 - Check Evaporative Emission (EVAP) Canister Purge Regulator Valve -N80- ⇒ Page 20-34 - Check oxygen sensor and oxygen sensor control before catalytic converter ⇒ Page 24-87 - Check oxygen sensor and oxygen sensor control behind catalytic converter ⇒ Page 24-92
P1113	Bank 1, sensor 1 Internal resistance too Large	- Check oxygen sensor heater for oxygen sensor before catalytic converter ⇒ Page 24-25
P1114	Bank 1, sensor 2 Internal resistance too Large	- Check oxygen sensor heater for oxygen sensor behind catalytic converter ⇒ Page 24-28
P1115	HO2S Heater Control Circuit (Bank 1 Sensor 1) Low	- Check oxygen sensor heater for oxygen sensor before catalytic converter ⇒ Page 24-25
P1116	HO2S Heater Control Circuit (Bank 1 Sensor 1)	

ST-77

SAE-DTC	DTC text	Corrective action
P1117	HO2S Heater Control Circuit (Bank 1 Sensor 2) Low	- Check oxygen sensor heater for oxygen sensor behind catalytic converter ⇒ Page 24-28
P1118	HO2S Heater Control Circuit (Bank 1 Sensor 2)	
P1127	Bank 1, mixture adaption (mult.) System too rich	- Fuel pressure regulator and residual pressure, checking ⇒ Page 24-78 - Check fuel injectors (Cylinder 1 Fuel Injector -N30- to Cylinder 4 Fuel Injector -N33-) ⇒ Page 24-65 - Check Evaporative Emission (EVAP) Canister Purge Regulator Valve -N80- ⇒ Page 20-31

ST-78

SAE- DTC	DTC text	Corrective action
P1128	Bank 1, mixture adaption (mult.) System too lean	- Fuel pressure regulator and residual pressure, checking ⇒ Page 24-78 - Check fuel injectors (Cylinder 1 Fuel Injector -N30- to Cylinder 4 Fuel Injector -N33-) ⇒ Page 24-65 - Check intake air system for leaks (false air) ⇒ Page 24-84 - Fuel Pump (FP) -G6-, checking ⇒ Page 20-15 - Check exhaust system for proper seal ⇒ Page 26-1 , Components of the exhaust system, removing and installing - Check Secondary Air Injection (AIR) system for proper seal ⇒ Page 26-18 - Check vacuum lines for leaks

ST-79

SAE-DTC	DTC text	Corrective action
P1136	Bank 1, mixture adaption (add.) system too lean	- Check fuel pressure regulator and residual pressure ⇒ Page 24-78 - Check Cylinder 1 Fuel Injector -N30- to Cylinder 4 Fuel Injector -N33- ⇒ Page 24-65 - Check intake system for leaks (false air) ⇒ Page 24-84 - Check Fuel Pump (FP) -G6- ⇒ Page 20-15 - Check exhaust system for proper seal ⇒ Page 26-1 , removing and installing exhaust system components - Check Secondary Air Injection (AIR) system for proper seal ⇒ Page 26-18 - Check vacuum lines for leaks
P1137	Bank 1, mixture adaption (add.) system too rich	- Check fuel pressure regulator and residual pressure ⇒ Page 24-78 - Check Cylinder 1 Fuel Injector -N30- to Cylinder 4 Fuel Injector -N33- ⇒ Page 24-65 - Check Evaporative Emission (EVAP) Canister Purge Regulator Valve -N80- ⇒ Page 20-34

Note:

add. = additive, means that malfunction is only valid at closed throttle (idle)

ST-80

SAE-DTC	DTC text	Corrective action
P1141	Load detection implausible value	- Check Mass Air Flow (MAF) Sensor -G70- ⇒ Page 24-31 - Check Throttle Valve Control Module -J338- ⇒ Page 24-36 - Check intake system for leaks (false air) ⇒ Page 24-84
P1143	Load detection value above upper limit	
P1149	Oxygen sensor control, Bank 1 Unplausible control value	- Check oxygen sensor and oxygen sensor control before catalytic converter ⇒ Page 24-87
P1176	Bank 1, Lambda correction downstream of catalyst control limit reached	- Check Oxygen Sensor (O2S) and oxygen sensor control before Three Way Catalytic Converter (TWC) ⇒ Page 24-87 - Check Oxygen Sensor (O2S) and oxygen sensor control behind Three Way Catalytic Converter (TWC) ⇒ Page 24-92 - Check intake air system for leaks (false air) ⇒ Page 24-84
P1196	O2 Sensor Heater Circuit, Bank 1- Sensor 1 Electrical Fault	- Check oxygen sensor heater for oxygen sensor before catalytic converter ⇒ Page 24-25
P1198	O2 Sensor Heater Circuit, Bank 1-Sensor 2 Electrical Fault	- Check oxygen sensor heater for oxygen sensor behind catalytic converter ⇒ Page 24-28

Fuel and air ratios

SAE-DTC	DTC text	Corrective action
P1201	Injector Circuit/Open Cylinder 1	- Check fuel injectors (Cylinder 1 Fuel Injector -N30- to Cylinder 4 Fuel Injector -N33-) ⇒ Page 24-65
P1202	Injector Circuit/Open Cylinder 2	
P1203	Injector Circuit/Open Cylinder 3	
P1204	Injector Circuit/Open Cylinder 4	
P1213	Cylinder 1 Injector Circuit, High	
P1214	Cylinder 2 Injector Circuit, High	
P1215	Cylinder 3 Injector Circuit, High	
P1216	Cylinder 4 Injector Circuit, High	
P1225	Cylinder 1 Injector Circuit, Low	
P1226	Cylinder 2 Injector Circuit, Low	
P1227	Cylinder 3 Injector Circuit, Low	
P1228	Cylinder 4 Injector Circuit, Low	

ST-82

SAE-DTC	DTC text	Corrective action
P1237	Cylinder 1 injector -N30-, Open circuit	- Check fuel injectors (Cylinder 1 Fuel Injector -N30- to Cylinder 4 Fuel Injector -N33-) ⇒ Page 24-65
P1238	Cylinder 2 injector -N31-, Open circuit	
P1239	Cylinder 3 injector -N32-, Open circuit	
P1240	Cylinder 4 injector -N33-, Open circuit	

ST-83

Ignition system

SAE-DTC	DTC text	Corrective action
P1300	Misfire Detected, Low Fuel	- Fuel level less than 2 gallons, add fuel to tank - Check signal from sender for fuel gauge -G-: ⇒ *Electrical Wiring Diagrams, Troubleshooting &Component Locations* - Check wire connection between Engine Control Module (ECM) and instrument cluster according to wiring diagram: ⇒ *Electrical Wiring Diagrams, Troubleshooting &Component Locations*
P1325	Knock control - cylinder 1 control limit reached	- Fill fuel tank with fuel of at least 91 RON - Check harness connectors - Repair cause for abnormal engine running noise - Loosen knock sensors and tighten again to 20 Nm - Check Knock Sensor (KS) 1 -G61- ⇒ Page 28-20
P1326	Knock control - cylinder 2 control limit reached	
P1327	Knock control - cylinder 3 control limit reached	
P1328	Knock control - cylinder 4 control limit reached	

ST-84

SAE-DTC	DTC text	Corrective action
P1355	Ignition activation cylinder 1 Open circuit	- Check Ignition Coil -N152- ⇒ Page 28-23 - Check Ignition Coil Power Output Stage -N157- ⇒ Page 28-25
P1356	Ignition activation cylinder 1 Short circuit to B+	
P1357	Ignition activation cylinder 1 Short circuit to Ground (GND)	
P1358	Ignition activation cylinder 2 Open circuit	
P1359	Ignition activation cylinder 2 Short circuit to B+	
P1360	Ignition activation cylinder 2 Short circuit to Ground (GND)	
P1361	Ignition activation cylinder 3 Open circuit	
P1362	Ignition activation cylinder 3 Short circuit to B+	
P1363	Ignition activation cylinder 3 Short circuit to Ground (GND)	
P1364	Ignition activation cylinder 4 Open circuit	
P1365	Ignition activation cylinder 4 Short circuit to B+	
P1366	Ignition activation cylinder 4 Short circuit to Ground (GND)	

ST-85

SAE- DTC	DTC text	Corrective action
P1386	Internal Control Module Memory Check Sum Error	- Replace Motronic Engine Control Module (ECM) -J220- ⇒ Page 24-105
P1387	Internal Control Module Memory Check Sum Error	
P1388	Internal Control Module Memory Check Sum Error	

ST-86

Additional exhaust regulation

SAE-DTC	DTC text	Corrective action
P1409	Evaporative Emission System Pure Control Valve Circuit	- Check Evaporative Emission (EVAP) Canister Purge Regulator Valve -N80- ⇒ Page 20-34
P1410	Evaporative Emission (EVAP) Canister Purge Regulator Valve -N80-, Short circuit to B+	
P1420	Secondary Air Injection System Switching Valve (A) Circuit, Malfunction	- Check Secondary Air Injection (AIR) Solenoid Valve -N112- ⇒ Page 26-20
P1421	Secondary Air Injection (AIR) Solenoid Valve -N112-, Short circuit to Ground (GND)	
P1422	Secondary Air Injection (AIR) Solenoid Valve -N112-, Short circuit to B+	
P1424	Bank 1, Secondary air system leak detected	- Check Secondary Air Injection (AIR) system for proper seal ⇒ Page 26-18
P1425	Evaporative Emission (EVAP) Canister Purge Regulator Valve -N80-, Short circuit to Ground (GND)	- Check Evaporative Emission (EVAP) Canister Purge Regulator Valve -N80- ⇒ Page 20-31
P1426	Evaporative Emission System Pure Control Valve Circuit, Open	
P1432	Secondary Air Injection System Switching Valve (A) Circuit Open	- Check Secondary Air Injection (AIR) Solenoid Valve -N112- ⇒ Page 26-20

SAE- DTC	DTC text	Corrective action
P1433	Secondary air pump relay -J299- open circuit	- Check activation of Secondary Air Injection (AIR) Pump Relay -J299- according to wiring diagram: ⇒ *Electrical Wiring Diagrams, Troubleshooting &Component Locations*
P1434	Secondary Air Injection (AIR) Pump Relay -J299- Short circuit to B+	
P1435	Secondary Air Injection (AIR) Pump Relay -J299- Short circuit to Ground (GND)	
P1436	Secondary air pump relay -J299- electrical fault in circuit	
P1450	Secondary Air Injection System, Short circuit to B+	- Check activation of Secondary Air Injection (AIR) Pump Relay -J299-: ⇒ *Electrical Wiring Diagrams, Troubleshooting &Component Locations*
P1451	Secondary Air Injection System, Short circuit to Ground (GND)	
P1452	Secondary air system, Open circuit	

Speed and idle control

SAE-DTC	DTC text	Corrective action
P1500	Fuel Pump Primary Circuit, Fault in electrical circuit	- Check activation of Fuel Pump (FP) Relay -J17- according to wiring diagram: ⇒ *Electrical Wiring Diagrams, Troubleshooting &Component Locations*
P1501	Fuel Pump (FP) Relay -J17-, Short circuit to Ground (GND)	
P1502	Fuel Pump (FP) Relay -J17-, Short circuit to B+	
P1541	Fuel Pump (FP) Relay -J17-, Open circuit	

ST-89

SAE-DTC	DTC text	Corrective action
P1542	Angle sender 1 for throttle valve drive - G187-, Implausible signal	- Throttle Valve Control Module -J338-, checking ⇒ Page 24-36
P1543	Angle sender 1 for throttle valve drive - G187-, Signal too low	
P1544	Angle sender 1 for throttle valve drive - G187-, Signal too high	
P1545	Throttle valve control system malfunction	
P1580	Throttle valve drive, Bank 1, Malfunction	

ST-90

SAE-DTC	DTC text	Corrective action
P1582	Idling speed regulation adaption limit reached	- Fuel pressure regulator and residual pressure, checking ⇒ Page 24-78 - Check intake air system for leaks (false air) ⇒ Page 24-84 - Check fuel injectors (Cylinder 1 Fuel Injector -N30- to Cylinder 4 Fuel Injector -N33-) ⇒ Page 24-65 - Check Evaporative Emission (EVAP) Canister Purge Regulator Valve -N80- ⇒ Page 20-31 - Check exhaust system for proper seal ⇒ Page 26-1 , Parts of the exhaust system, removing and installing - Check Secondary Air Injection (AIR) system for proper seal ⇒ Page 26-18 - Check vacuum lines for leaks

ST-91

Control module and output signals

SAE-DTC	DTC text	Corrective action
P1602	Voltage supply - terminal 30 Voltage too low	- Check voltage supply for control module ⇒ Page 24-101
P1603	Internal Control Module Memory Check Sum Error	- Replace Motronic Engine Control Module (ECM) -J220- ⇒ Page 24-105
P1604	Internal Control Module Memory Check Sum Error	
P1610	Internal Control Module Memory Check Sum Error	
P1611	Request MIL on, Short circuit to Ground (GND)	- Check activation of Malfunction Indicator Lamp (MIL) -K83- according to wiring diagram: ⇒ *Electrical Wiring Diagrams, Troubleshooting &Component Locations*
P1613	Request MIL on, Open circuit/short circuit to B+	
P1640	Internal Control Module Memory Check Sum Error	- Replace Motronic Engine Control Module (ECM) -J220- ⇒ Page 24-105
P1681	Control unit programming programming not finished	

Transmission

SAE-DTC	DTC text	Corrective action
P1778	Valve 7, Electrical fault in circuit	- Check Solenoid Valve 7 -N94- ⇒ Page 38-22 , Checking solenoid valves in valve body
P1781	Torque reduction signal, Open circuit/short circuit to Ground (GND)	- Check ATF level. ⇒ *Repair Manual, 4 Spd. Automatic Transmission 01M, Repair Group 37; ATF level, checking and topping up* - Mechanical malfunction in transmission

ST-93

SAE P2xxx-DTCs

Fuel and air ratios and additional emission regulations

SAE-DTC	DTC text	Corrective action
P2096	Post Catalyst Fuel Trim System Too Lean Bank 1	- Check oxygen sensor and oxygen sensor control before catalytic converter ⇒ Page 24-87 - Check oxygen sensor and oxygen sensor control behind catalytic converter ⇒ Page 24-92 - Check intake system for leaks (false air) ⇒ Page 24-84
P2097	Post Catalyst Fuel Trim System Too Rich Bank 1	

Fuel and air ratios

SAE-DTC	DTC text	Corrective action
P2181	Cooling System Performance	- Check Engine Coolant Temperature (ECT) Sensor -G62- ⇒ Page 24-44 - Check coolant regulator: ⇒ *Repair Manual, 4-Cyl. Fuel Injection Engine Mechanical, Repair Group 19; removing and installing cooling system components*

ST-94

Fuel and air ratios

SAE-DTC	DTC text	Corrective action
P2231	O2 Sensor Signal Circuit Shorted to Heater Circuit Bank 1 Sensor 1	- Check oxygen sensor heater for oxygen sensor before catalytic converter ⇒ Page 24-25 - Check oxygen sensor and oxygen sensor control before catalytic converter ⇒ Page 24-87
P2237	O2 Sensor Positive Current Control Circuit/Open Bank 1 Sensor 1	
P2243	O2 Sensor Reference Voltage Circuit/Open, Bank 1 Sensor 1	
P2251	O2 Sensor Negative Current Control Circuit/Open, Bank 1 Sensor 1	
P2257	Secondary Air Injection System Control "A" Circuit Low	- Check activation of Secondary Air Injection (AIR) Pump Relay -J299- according to wiring diagram: ⇒ *Electrical Wiring Diagrams, Troubleshooting &Component Locations*
P2258	Secondary Air Injection System Control "A" Circuit High	
P2270	O2 Sensor Signal Stuck Lean, Bank 1 Sensor 2	- Check oxygen sensor and oxygen sensor control behind catalytic converter ⇒ Page 24-92
P2271	O2 Sensor Signal Stuck Rich, Bank 1 Sensor 2	
P2279	Intake Air System Leak	- Check intake system for leaks (false air) ⇒ Page 24-84

ST-95

Control module and output signals

SAE-DTC	DTC text	Corrective action
P2626	O2 Sensor Pumping Current Trim Circuit/Open, Bank 1 Sensor 1	- Check oxygen sensor and oxygen sensor control before catalytic converter ⇒ Page 24-87

SAE P3xxx-DTCs

Fuel and air ratios and additional emission regulations

SAE-DTC	DTC text	Corrective action
P3081	Engine temperature too low	- Let engine warm up • Coolant temperature must be at least 50 °C ⇒Diagnostic mode 1: Check measuring values; PID 5, coolant temperature
P3092	Internal Control Module Memory Check Sum Error	- Replace Motronic Engine Control Module (ECM) - J220- ⇒ Page 24-105
P3093	Internal Control Module Memory Check Sum Error	
P3096	Internal Control Module Memory Check Sum Error	
P3097	Internal Control Module Memory Check Sum Error	

Fuel and air ratios

SAE-DTC	DTC text	Corrective action
P3211	Exhaust-bank 1-sensor 1 Heater return connection	- Check oxygen sensor heater for oxygen sensor before catalytic converter ⇒ Page 24-25 - Check oxygen sensor and oxygen sensor control before catalytic converter ⇒ Page 24-87
P3255	Bank 1, oxygen sensor before catalytic converter, heating circuit Regulation at upper impact	
P3256	Bank 1, oxygen sensor before catalytic converter, heating circuit Regulation at lower impact	
P3266	Bank 1, sensor 1 Internal resistance too Large	

Volkswagen Passat

Official Factory Repair Manual

1995
Gasoline, Turbo Diesel, TDI
4-cylinder and VR6, including wagon

Robert Bentley

PASSAT '95 - '97

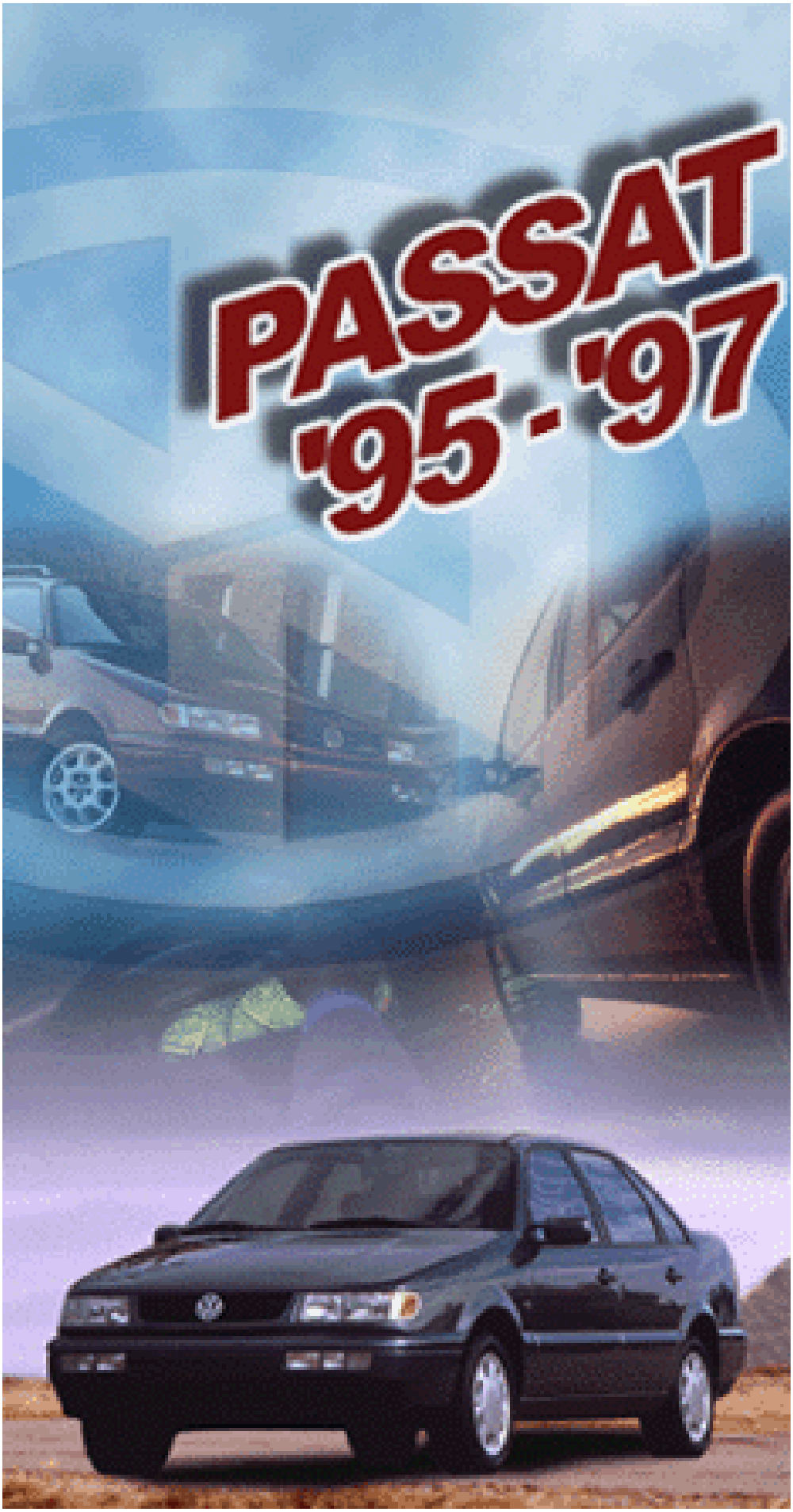

2.8 Liter VR6 2V Fuel Injection & Ignition, Engine Code(s): AAA m.y. 1995

01 - On Board Diagnostic (OBD)

On Board Diagnostic (OBD)
Function

On Board Diagnostic, technical data

VAG 1551 Scan Tool, connecting

Check DTC Memory (function 02)

Diagnostic Trouble Code (DTC) table

Erase DTC Memory (function 05)

Output Diagnostic Test Mode (DTM), initiating

Electrical wiring and component checks

24 - Multiport Fuel Injection (MFI)

Motronic Fuel Injection and Ignition system, component layout
Motronic Fuel Injection system, servicing
Safety precautions
Rules of cleanliness
Technical data
Idle speed, checking
Engine operation, checking
Throttle Position sensor, checking
Transmission Control Module (TCM) and Throttle Position sensor, matching to one another
Intake Air Temperature sensor, checking
Engine Coolant Temperature (ECT) sensor, checking
Fuel pressure regulator and residual pressure, checking
Fuel injectors, removing and installing
Fuel injectors, checking
Throttle damper, checking and adjusting

28 - Ignition/Glow plug system

Motronic Fuel Injection and Ignition system
Ignition system, servicing
Safety precautions
Technical data, spark plugs

Camshaft Position sensor, checking
Ignition coil, checking

On Board Diagnostic (OBD)

Function

The Motronic Engine Control Module (ECM) (J220) for the fuel injection and ignition system is equipped with a Diagnostic Trouble Code (DTC) memory.

If malfunctions occur in the sensors and components being monitored, they will be stored in the DTC memory together with an indication of the type of malfunction.

The stored codes can be displayed by initiating the DTC display ⇒ Page 01-5 . The DTC memory must be erased once the malfunction has been eliminated ⇒ Page 01-30 .

A malfunction relating to the function of the Oxygen sensor control system can only be interrogated after a test drive of at least 10 minutes duration.

Malfunctions which can be attributed to a temporary open circuit in the wiring or a loose terminal, will also be stored. These malfunctions will be displayed as sporadic "SP" and are automatically cancelled if they are not repeated after 50 engine starts.

Note:

Only for vehicles with Malfunction Indicator Lamp (MIL):

The MIL lamp in the instrument cluster should light up when the ignition is switched on and go out when the engine has started.

If malfunctions occur in the sensors and/or components and the monitoring conditions are satisfied, the MIL lamp will also light up with the engine running.

01-2

On Board Diagnostic, technical data

- Diagnostic Trouble Code (DTC) memory: Non-volatile memory and volatile memory [1)]

- Rapid data transfer

[1)] Will be cancelled after 50th engine start if malfunction has not occurred again.

Selectable functions

Function	Ignition switch on	Engine idling
02 Check DTC Memory	x	x
03 Output Diagnostic Test Mode (DTM)	x	-
04 Basic Setting [1)]	-	x
05 Erase DTC Memory	-	x
06 End Output	x	x
08 Read Measuring Value Block [1)]	x	x

[1)] The display values for this function and descriptions of the associated measuring value blocks are described in the respective repair procedures. Other measuring value blocks and values output by the ECM are not currently used by service.

01-3

VAG 1551 Scan Tool, connecting

Selecting Address word "Engine electronics"

- Battery Voltage OK.
- Fuse 22 OK.
- Ground connections on engine and transmission OK. (Engine ground connection: on upper intake manifold support ⇒ Page 24-2 , item 9).

- Unclip cover for Data Link Connectors (DLC).

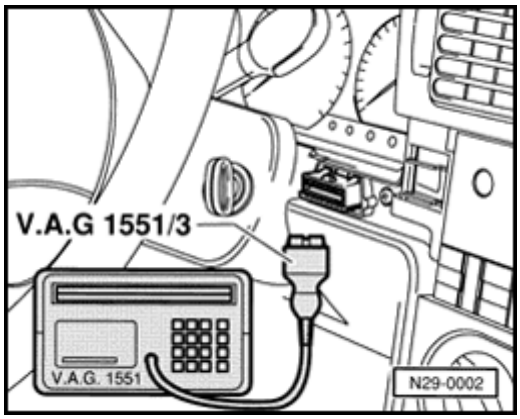

- Connect Scan Tool VAG 1551 using adaptor cable VAG 1551/3.
- Depending upon desired function: Switch on ignition or Start engine.
- Operate Scan Tool, taking into account the displayed information:
- Input 1 to select "Rapid data transfer".
- Input 01 to select address word "Engine electronics" and confirm with Q.

01-4

021906258BK ENGINE **Coding 3**	→	≺	The Scan Tool display will show the ECM identification, e.g.: ♦ 021906258BK = Engine Control Module (ECM) Part No. ♦ Coding 1 = Coding variants 1 for manual trans. without Exhaust Gas Recirculation (EGR) ***CAUTION!*** ***Part numbers are for reference only. Always check with the Parts Department for the latest information.*** ***Note:*** *The engine must be running at idle to correctly display the ECM number and coding. Coding:* *1 = Manual transmission without EGR* *2 = Automatic transmission without EGR* *3 = Manual transmission with EGR* *4 = Automatic transmission with EGR* - Press → button.
Rapid data transfer **Select function XX**	**HELP**	≺	Display will appear as shown: - For additional steps see the repair procedures.

Check DTC Memory (function 02)

- Connect Scan Tool VAG 1551 and select address word 01 "engine electronics", selection is performed with engine idling. ⇒ Page 01-3

If the engine will NOT start, perform the following steps:

- Operate starter for approx. 6 seconds and then do not switch off the ignition.

- Press the PRINT button on the Scan Tool to switch on the printer (Warning lamp in button lights up).

Rapid data transfer **HELP**
Select function XX

Display will appear as shown:

- Input 02 to select Function "Check DTC Memory" and confirm with Q.

X DTCs recognized!

The number of DTCs stored or "No DTC recognized!" will be shown on the display.

Note:

If something different is indicated on the display: ⇒ Scan Tool operating instructions

If one or more DTCs are stored, the stored DTCs will be displayed and printed out in sequence.

Rapid data transfer **HELP**
Select function XX

The display will then appear as shown:

If no DTCs are stored:

- Press → button.

01-6

- Input 06 to select Function "End output" and confirm with Q.

- Locate and eliminate malfunctions (DTCs) printed out as per DTC table ⇒ Page 01-7 .

- To erase DTC memory, ⇒ Page 01-30 .

Diagnostic Trouble Code (DTC) table

Notes:

- *The 5 digit DTC codes displayed by the VAG 1551 Scan Tool can be looked up in the following charts by finding the same DTC code in the upper left corner of each chart.*
- *Before replacing components indicated as being faulty, check the wiring and connectors to these components as well as the ground connections using the wiring diagram. This is particularly relevant if the malfunction is displayed as "sporadic" (SP).*
- *For wiring checks, also see "Electrical checks",* ⇒ *Page 01-41* .

Scan Tool Display	Possible cause	Corrective steps
No DTC recognized!	If a malfunction is present but is not recognized by On Board Diagnostic:	Continue troubleshooting using the wiring diagram.

Scan Tool Display	Possible cause	Corrective steps
00281 1231 Vehicle Speed sensor -G68 Impossible signal	No signal from Speedometer (G21)[1] or Speedometer Vehicle Speed sensor (G22)	Check signal from G21 or G22 ⇒ Page 01-45 , test step Fig. 8
	Open circuit	Locate open circuit using wiring diagram and correct as necessary
No signal	No display on Speedometer: Speedometer Vehicle Speed sensor (G22) faulty	- Replace-G22 Continue troubleshooting using wiring diagram.

[1] Check vehicle speed signal at an engine speed greater than 4500 RPM, with the vehicle driven at wide open throttle, US vehicles with stored DTCs are limited to a maximum engine speed of approx. 5300 RPM.

01-9

Scan Tool Display	Possible cause	Corrective steps
00513 2111 Engine Speed sensor -G28 No signal	Open Circuit	Check wiring together with G28 ⇒ Page 01-51 , test step 29
	G28 faulty	Replace G28, ⇒ Page 24-10 , item 10
Impossible signal [1]	Engine Speed sensor, trigger wheel loose or faulty	Ensure that G28 is securely seated: ⇒ *Repair Manual, 2.8 Liter VR6 2V Engine Mechanical, Engine Code(s): AAA, Repair Group 13*
	G28 loose	Ensure that G28 is seated securely, ⇒ Page 24-10 , item 10

[1] In isolated cases, malfunction may be stored as a result of engine being abruptly stalled (sporadic malfunction).

01-10

Scan Tool Display	Possible cause	Corrective steps
00515 2113 Camshaft Position sensor G40 Open/short circuit to positive	Camshaft timing out	Check G40, ⇒ Page 28-2 Check valve timing ⇒ *Repair Manual, 2.8 Liter VR6 2V Engine Mechanical, Engine Code(s): AAA, Repair Group 13; disassembling and assembling engine; setting timing*
	Wiring open circuit or wiring/G40 has short circuit to positive	Check wiring to G40 ⇒ Page 01-48 , test step 22
Short circuit to ground	Short circuit to ground in wiring or G40	Check wiring to G40 ⇒ Page 01-48 , test step 22
00518 2212 Throttle Position sensor -G69 Open/short circuit to positive	Wiring open circuit or wiring/G69 has short circuit to positive	Check wiring together with G69 ⇒ Page 01-48 , test step 22
Open circuit/short circuit to ground	G69 faulty or wiring has short circuit to ground	Check G69, ⇒ Page 24-31

Scan Tool Display	Possible cause	Corrective steps
00522 2312 Engine Coolant Temperature sensor - G62	G62 faulty	Replace G62, ⇒ Page 24-9 , item 5
Short circuit to ground	Wiring has short circuit to ground	Check wiring together with G62 for short circuit ⇒ Page 01-46 , test step 18
Open circuit/short circuit to positive	G62 faulty, or incorrect operation caused by corrosion at connector	
	Short circuit to ground in wiring or G40	For sporadic malfunctions, also check G62, ⇒ Page 24-36
00524 2142 Knock sensor 1 -G61	G61 faulty	Replace G61 ⇒ Page 28-4 , item 12
Open circuit/short to ground	Wiring open circuit or short circuit in sensor wiring to ground	Check wiring to G61 ⇒ Page 01-49 , test step 24
	No knock detection from Motronic Engine Control Module (J220)	Replace J220, ⇒ Page 24-8 , item 2

01-12

Scan Tool Display	Possible cause	Corrective steps
00525 2342 Heated Oxygen sensor -G39	G39 faulty	Replace G39, ⇒ Page 24-9 , item 4
No signal	Oxygen sensor heating faulty	Check Oxygen sensor heating relay (J278) ⇒ Page 01-44 , test step Fig. 5
	Wiring open circuit	Check wiring to G39 ⇒ Page 01-47 , test step 20
Short circuit to positive	Short circuit to positive in wiring or G39	
Short circuit to ground	Short circuit to ground in wiring or G39	
	Fuel tank empty	Fill tank / erase DTC memory ⇒ Page 01-30

01-13

Scan Tool Display	Possible cause	Corrective steps
00527 2412 Intake Air Temperature sensor - G72	G72 faulty	Check G72, ⇒ Page 24-35 , replace if necessary
Short circuit to ground	Short circuit to ground in wiring	Check wiring together with G72 for short circuit ⇒ Page 01-50 , test step 25
Open circuit/short circuit to positive	G72 faulty, or incorrect operation caused by corrosion in connector	
	Wiring open circuit or wiring short circuit to positive	

Scan Tool Display	Possible cause	Corrective steps
00532 2234 Supply voltage[1)] Signal too high	Battery voltage above 16.0 Volts	Check Generator using wiring diagram Check J220 voltage supply ⇒ Page 01-43 , test steps Fig. 1 + Fig. 2
Signal too low	Battery voltage below 10.0 Volts	Check battery

[1)] DTC recognition: Motronic Engine Control Module (J220) checks Voltage after engine has been running for 3 minutes.

Scan Tool Display	Possible cause	Corrective steps
00533 2234 Idle speed control Adaption limit exceeded	Idle Air Control valve (N71) sticking or dirty	Check N71 ⇒ Page 01-31 , Output Diagnostic Test Mode Check intake system for leaks (unmeasured air)
Adaption limit not reached	Unmeasured air (leak) between Mass Air Flow sensor (G70) and engine	Vehicles with EGR, check EGR valve: ⇒ *Repair Manual, 2.8 Liter VR6 2V Engine Mechanical, Engine Code(s): AAA, Repair Group 26; removing and installing parts of exhaust system; exhaust gas recirculation system*
00535 2141 First knock control Impossible signal	Engine Control Module (J220) knock control faulty	Replace J220, ⇒ Page 24-8 , item 2

Scan Tool Display	Possible cause	Corrective steps
00537 2341		
Oxygen sensor control Control limit exceeded	Exhaust system leaking between cylinder head and three-way catalyst	Check exhaust system: ⇒ *Repair Manual, 2.8 Liter VR6 2V Engine Mechanical, Engine Code(s): AAA, Repair Group 26; removing and installing parts of exhaust system*
	Misfiring	Check the ignition components ⇒ Page 28-1
	Intake system leaking	Check intake air system for leakage (unmetered air)
	Injector(s) (N30, N31, N32, N33, N83, N84) faulty	Check (N30, N31, N32, N33, N83, N84) ⇒ Page 24-43
	Fuel pressure too low	Check fuel pressure regulator, ⇒ Page 24-39
	EVAP canister purge regulator valve 1 (N80) sticks (permanently open)	Check N80 ⇒ Page 01-32 , Output Diagnostic Test Mode
Control limit not reached	Fuel pressure too high	Check fuel pressure regulator, ⇒ Page 24-39
	Injector(s) (N30, N31, N32, N33, N83, N84) faulty, leaking	Check N30...N33, N83, N84, ⇒ Page 24-43

01-17

Scan Tool Display	Possible cause	Corrective steps
00540 2144 Knock sensor 2 -G66	G66 faulty	Replace G66 ⇒ Page 28-3 , item 10
Open circuit/short circuit to ground	Wiring open circuit or short circuit in sensor wiring to ground	Check wiring to G66 ⇒ Page 01-50 , test step 27
	No knock detection from Motronic Engine Control module (J220)	Replace J220, ⇒ Page 24-8 , item 2
00543 2214 Maximum engine speed exceeded	Engine enters governed speed range	Erase DTC Memory ⇒ Page 01-30
Signal too large	Signal from Engine Speed sensor (G28) disrupted	Check wiring together with G28 (shielding) ⇒ Page 01-51 , test step 29
00545 2314 Engine / transmission electrical connection Short circuit to ground	Wiring short circuit to ground	Locate short circuit using wiring diagram and correct as necessary

01-18

Scan Tool Display	Possible cause	Corrective steps
00549 2243 Consumption signal Short circuit to positive	Wiring short circuit to positive	Locate short circuit using wiring diagram and correct as necessary
00553 2243 Mass Air Flow sensor - G70	G70 faulty	Replace G70 ⇒ Page 24-12 , item 8
Open circuit/short circuit to positive	Open circuit or short circuit to positive	Check wiring to G70 ⇒ Page 01-43 , test steps 28 and Fig. 4 .
Short circuit to ground	Wiring or G70 short to ground	
	Unmeasured air between G70 and engine	Check intake air system for leaks (unmeasured air)

*) Refers to the signal sent to the Multi-function Indicator for calculating fuel consumption.

Scan Tool Display	Possible cause	Corrective steps
00561 2413 Mixture adaption Adaption limit exceeded or not reached	Fuel pressure not OK	Check fuel pressure regulator ⇒ Page 24-39
	Misfiring	Check ignition components ⇒ Page 28-1
	Intake air system leaking (unmeasured air)	Check intake system for leaks (unmetered air)
	Injector(s) (N30, N31, N32, N33, N83, N84) faulty, leaking	Check N30...N33, N83, N84 ⇒ Page 24-43
	Oxygen sensor control faulty	Check Oxygen senor heating relay (J287) ⇒ Page 01-43 , test step Fig. 5 Check wiring to Oxygen sensor (G39) ⇒ Page 01-43 , test step 20

01-20

Scan Tool Display	Possible cause	Corrective steps
Adaption limit exceeded or not reached (continued)	Exhaust system leaking between cylinder head and three-way catalyst	Check exhaust system: ⇒ *Repair Manual, 2.8 Liter VR6 2V Engine Mechanical, Engine Code(s): AAA, Repair Group 26; removing and installing parts of exhaust system*
	EVAP canister purge regulator valve 1 (N80) sticking (permanently open)	Check N80 ⇒ Page 01-32 , Output Diagnostic Test Mode
00585 2411 Exhaust gas recirculation (EGR) Temperature sensor - G98 Short circuit to ground	Wiring or G98 in EGR valve has short circuit to ground	Check wiring together with G98 for short circuit ⇒ Page 01-52 , test step 32
00586 Exhaust gas recirculation (EGR) system regulation Impossible signal	EGR valve sticking or faulty	Check EGR valve: ⇒ *Repair Manual, 2.8 Liter VR6 2V Engine Mechanical, Engine Code(s): AAA, Repair Group 26; removing and installing parts of exhaust system, exhaust gas recirculation system*

01-21

Scan Tool Display	**Possible cause**	**Corrective steps**
00609 Ignition output 1 Short circuit to positive	Short circuit to positive in wiring or ignition coil (N152)	Check wiring to N152 ⇒ Page 01-49 , test step 23 Check N152., ⇒ Page 28-8
00610 Ignition output 2 Short circuit to positive	Short circuit to positive in wiring or ignition coil (N152)	Check wiring to N152 ⇒ Page 01-49 , test step 23 Check N152, ⇒ Page 28-8
00611 Ignition output 3 Short circuit to positive	Short circuit to positive in wiring or ignition coil (N152)	Check wiring to N152 ⇒ Page 01-49 , test step 23 Check N152, ⇒ Page 28-8

01-22

Scan Tool Display	Possible cause	Corrective steps
00640 3434 Heated Oxygen sensor relay -J278	Wiring has short circuit to positive	Check J278 ⇒ Page 01-31 , Output Diagnostic Test Mode Locate short circuit using wiring diagram and correct as necessary
Short circuit to positive		
Open circuit/short circuit to ground	Open circuit or short circuit to ground in wiring	Check wiring to J278 ⇒ Page 01-44 , test step Fig. 5
01025 MIL lamp activation faulty	Wiring has short circuit to positive	Check wiring together with MIL lamp ⇒ Page 01-44 , test step Fig. 6 Replace MIL lamp if necessary
Short circuit to positive		
Open circuit/short circuit to ground	MIL lamp faulty	
	Open circuit or short circuit to ground in wiring	

Scan Tool Display	Possible cause	Corrective steps
01235 4313 Secondary Air Injection solenoid valve -N112	N112 faulty	Check N112 ⇒ Page 01-31 , Output Diagnostic Test Mode
Short circuit to positive	Short circuit in wiring to positive	Check wiring together with N112 ⇒ Page 01-52 , test step 33
Open circuit/short circuit to ground	Open circuit or short circuit to ground in wiring	Replace N112 if necessary: ⇒ *Repair Manual, 2.8 Liter VR6 2V Engine Mechanical, Engine Code(s): AAA, Repair Group 26; secondary air system; removing and installing parts of secondary air system*
01242 4332 Engine Control Module output stages	Loose wiring terminals to control elements or Motronic Engine Control Module (J220) faulty	Perform Output Diagnostic Test Mode ⇒ Page 01-31
Mechanical malfunction		Check wiring to Output DTM components for loose terminals, replace J220 if necessary, ⇒ Page 24-8 , item 2

01-24

Scan Tool Display	Possible cause	Corrective steps
01247 4343		
EVAP canister purge regulator valve 1 -N80	Short circuit to positive in wiring or N80	Check N80 ⇒ Page 01-31 , Output Diagnostic Test Mode
Short circuit to positive		Check wiring together with N80 ⇒ Page 01-46 , test step 17
Open circuit/short circuit to ground	Open circuit or short circuit to ground in wiring	
	N80 faulty	Replace N80 if necessary: ⇒ *Repair Manual, 2.8 Liter VR6 2V Engine Mechanical, Engine Code(s): AAA, Repair Group 20; removing and installing parts of fuel system; servicing EVAP system*

01-25

Scan Tool Display	Possible cause	Corrective steps
01249 4411 Fuel Injector cylinder 1 -N30	Short circuit to positive in wiring or N30	Check N30 ⇒ Page 01-31 , Output Diagnostic Test Mode
Short circuit to positive		Check wiring together with N30 ⇒ Page 01-46 , test step 11
Open circuit/short circuit to ground	Open circuit or short circuit to ground in wiring	
	N30 faulty	Replace N30 if necessary, ⇒ Page 24-41 , removing and installing fuel injectors
01250 4412 Fuel Injector, cylinder 2 -N31	⇒Cyl. 1, DTC code 01249	Check wiring together with N31 ⇒ Page 01-46 , test step 12

01-26

Scan Tool Display	Possible cause	Corrective steps
01251 4413 Fuel Injector cylinder 3 -N32	⇒Cyl. 1, DTC code 01249	Check wiring together with N32 ⇒ Page 01-46 , test step 13
01252 4414 Fuel Injector, cylinder 4 - N33	⇒ Cyl. 1, DTC code 01249	Check wiring together with N33 ⇒ Page 01-46 , test step 14
01253 4421 Fuel Injector, cylinder 5 - N83	⇒Cyl. 1, DTC code 01249	Check wiring together with N83 ⇒ Page 01-46 , test step 15
01254 4422 Fuel Injector, cylinder 5 - N83	⇒Cyl. 1, DTC code 01249	Check wiring together with N84 ⇒ Page 01-46 , test step 16

01-27

Scan Tool Display	**Possible cause**	**Corrective steps**
01257 4431		
Idle Air Control valve - N71	Short circuit to positive in wiring or N71	Check N71 ⇒ Page 01-31 , Output Diagnostic Test Mode
Short circuit to positive		Check wiring together with N71 ⇒ Page 01-50 , test step 26
Open circuit/short circuit to ground	Open circuit or short circuit to ground in wiring	
	N71 faulty	Replace N71 if necessary, ⇒ Page 24-21 , item 18

01-28

Scan Tool Display	Possible cause	Corrective steps
01259 4433 Fuel pump relay - J17	J17 faulty	Check wiring together with J17 ⇒ Page 01-43 , test step Fig. 3
Short circuit to positive	Short circuit in wiring to positive	Replace J17 if necessary
01264 4311 Secondary Air Injection Pump relay J299	J299 faulty	Check J299 ⇒ Page 01-31 , Output Diagnostic Test Mode
Short circuit to positive	Short circuit in wiring to positive	Check wiring together with J299 ⇒ Page 01-52 , test step 33
Open circuit/short circuit to ground	Open circuit or short circuit to ground in wiring	Replace J299 if necessary: ⇒ *Repair Manual, 2.8 Liter VR6 2V Engine Mechanical, Engine Code(s): AAA, Repair Group 26; removing and installing parts of secondary air systems; secondary air system*

01-29

Scan Tool Display	**Possible cause**	**Corrective steps**
01265 4312 Exhaust gas recirculation (EGR) valve -N18	EGR valve N18 (two-way valve) faulty	Check N18 ⇒ Page 01-31 , Output Diagnostic Test Mode
Open circuit/short circuit to ground	Open circuit or short circuit to ground in wiring	Check wiring to N18 ⇒ Page 01-51 , test step 31 Replace N18 if necessary: ⇒ *Repair Manual, 2.8 Liter VR6 2V Engine Mechanical, Engine Code(s): AAA, Repair Group 26; removing and installing parts of exhaust system; EGR system*
Short circuit to positive	N18 faulty	Check wiring together with N18 ⇒ Page 01-51 , test step 30 + 31
	Short circuit to positive in wiring	
65535 1111 Engine Control Module faulty	Motronic Engine Control Module internal component (in J220)	Replace J220, ⇒ Page 24-8 , item 2

Erase DTC Memory (function 05)

- Malfunction eliminated

- Perform road test of at least 10 minutes duration, during test drive:

- The Engine Coolant Temperature must reach 80 °C (176 °F) minimum
- The engine speed must be increased to at least 4600 RPM
- The accelerator pedal must be fully depressed briefly
- Accelerate in 4th gear from approx. 30 MPH for approximately 4 seconds using half throttle.

- Connect Scan Tool VAG 1551 and select address word 01 "engine electronics"; selection is performed with engine idling ⇒ Page 01-3

Rapid data transfer **HELP**

Select function XX

Display will appear as shown:

- Input 02 to select Function "Check DTC Memory" and confirm with Q.

Rapid data transfer **HELP**

Select function XX

Display will appear as shown:

- Press → button until all DTCs still stored have appeared and the display reads as shown

01-31

Input 05 for "Erase DTC Memory" function and confirm with Q.

Rapid data transfer →

DTC memory is erased!

Display will appear as shown:

- Press → button.

Rapid data transfer **HELP**

Select function XX

Display will appear as shown:

- Input 06 to select Function "End output" and confirm with Q.
- Perform an additional road test and Check DTC Memory again. No DTCs should be shown.

01-32

Output Diagnostic Test Mode (DTM), initiating

The Output DTM actuates the following components in the sequence as shown:

. Fuel Injector, Cyl. 1 (N30)

. Fuel Injector, Cyl. 2 (N31)

. Fuel Injector, Cyl. 3 (N32)

. Fuel Injector, Cyl. 4 (N33)

. Fuel Injector, Cyl. 5 (N83)

. Fuel Injector, Cyl. 6 (N84)

. Idle Air Control valve (N71)

. EVAP canister purge regulator valve 1 (N80)

. Heated Oxygen sensor relay (J278)

01-33

. Exhaust Gas Recirculation (EGR) valve (N18), (two-way valve)[1)]

. Intake Manifold Change-Over valve (N 156) [2)]

. Secondary Air Injection pump relay (J299)[3)]

. Secondary Air Injection solenoid valve (N112) [3)]

[)] Only note display if EGR is installed

[)] Ignore display

[)] Only note display if Secondary Air Injection system is installed

- Throttle Position sensor (G69) OK.

- Connect Scan Tool VAG 1551 and select address word 01 "engine electronics", perform selection with ignition switched on, ⇒ Page 01-3

Rapid data transfer **HELP**

Select function XX

Display will appear as shown:

- Operate Scan Tool taking into account the information on the display:
- Input 03 to select function "Output Diagnostic Test Mode" .

Rapid data transfer **Q**

03 Output Diagnostic Test Mode

Display will appear as shown:

Note:

If something different is displayed on the Tester:

⇒ Scan Tool operating instructions

01-34

Activate Cyl. 1 Fuel Injector (N30):

- Confirm input with Q button.

Output Diagnostic Test Mode →

Injector cylinder 1 -N30

Display will appear as shown:

- Open Throttle to Wide Open position and close again. Cyl. 1 Fuel Injector must click

To activate the Fuel Injectors for Cyls. 2 through 6 in each case:

- Open Throttle to wide open position again and close.

To skip individual Fuel Injector tests:

- Press → button.

If one or more Fuel Injectors do not click:

- Continue Output DTM to the end.
- Switch off ignition.
- Check Fuel Injector activation (resistance and current supply), ⇒ Page 24-43 .

Activate Idle Air Control valve (N71):

- Press → button.

Output Diagnostic Test Mode →

Idle Air Control valve -N71

Display will appear as shown:

01-35

The Idle Air Control valve must click, until switching to the next DTM component by pressing the → button.

If the Idle Air Control valve does not click:

- Switch off ignition.
- Disconnect Idle Air Control valve harness connector.
- Connect VAG 1527B voltage tester to terminals 1 and 2 of harness connector using jumper wire from VW 1594
- Switch on ignition.
- Repeat Output DTM for Idle Air Control valve (N71). LED must flash

If LED flashes:

- Replace Idle Air Control valve.

If LED does NOT flash:

- Switch off ignition.
- Reconnect Idle Air Control valve harness connector .
- Perform electrical check ⇒ Page 01-50 , test step Fig. 26 , if necessary, replace Motronic Engine Control Module (J220).

01-36

Activate EVAP canister purge regulator valve (N80):

- Press → button.

Output Diagnostic Test Mode →

EVAP canister purge regulator valve N80

Display will appear as shown:

The activated EVAP canister purge regulator valve 1 (on Air Cleaner housing) must click until the next DTM component is selected by pressing the → button.

- Pull hose off EVAP canister purge regulator valve (from EVAP canister).
- Connect auxiliary hose.
- During Output DTM, blow into auxiliary hose (in direction of Throttle Body). Valve must open and close

If the EVAP canister purge regulator valve does not click:

- Disconnect 2 pin harness connector from EVAP canister purge regulator valve and connect VAG 1527B voltage tester to the harness connector using jumper wires from VW 1594 adaptor kit . The LED must flash

If the LED flashes:

- replace EVAP canister purge regulator valve.

If the LED does NOT flash:

- Switch off ignition.

01-37

- Reconnect EVAP canister purge regulator harness connector

- Perform electrical check ⇒ Page 01-46 , test step Fig. 17 .

- Replace Motronic Engine Control Module (J220) if necessary.

- Activate Heated Oxygen sensor relay (J278) as follows:

- Press → button.

Output Diagnostic Test Mode →

Heated Oxygen sensor relay-J278

Display will appear as shown:

The Heated Oxygen sensor relay (on the aux. fuse/ relay panel) must click until the next DTM component is activated by pressing the → button.

If the relay does not click:

- Switch off ignition.
- Perform electrical check ⇒ Page 01-44 , test step Fig. 5 or locate short circuit using wiring diagram and correct as necessary.

If an open circuit cannot be located:

- Replace Heated Oxygen sensor relay (J278) or Motronic Engine Control Module (J220) as necessary.
- Activate Exhaust Gas Recirculation (EGR) valve (N18) as follows:
- Press → button.

01-38

Output Diagnostic Test Mode →

Exhaust Gas Recirculation valve -N18

Display will appear as shown:

The EGR valve (N18) (two-way valve) must click.

If the EGR valve does not click:

- Disconnect 2 pin harness connector from EGR valve and connect VAG 1527B voltage tester to harness connector using jumper wires from the VW 1594 adaptor kit.

If the LED flashes:

- Replace EGR valve (N18) (two-way valve).

If the LED does not flash:

- Switch off ignition.
- Reconnect EGR valve harness connector.
- Perform electrical check ⇒ Page 01-51 , test step Fig. 31 , replace Motronic Engine Control Module (J220) if necessary.
- Press → button.

Output Diagnostic Test Mode →

Intake manifold change-over valve -N156

Display will appear as shown (ignore display):

- Press → button.

Activate Secondary Air Injection pump relay (J299):

- Press → button.

Output Diagnostic Test Mode →

Secondary Air Injection pump relay-J299

Display will appear as shown:

01-39

The Secondary Air Injection pump relay (J299) must run until the next DTM component is activated by pressing the → button.

If the Secondary Air Injection pump motor does not run:

- Press → button until the Output Diagnostic Test Mode is completed
- Input 06 to select Function "End output" and confirm with Q.
- Switch off ignition.
- Perform electrical check ⇒ Page 01-52 , test step Fig. 33 or locate short circuit using wiring diagram and correct as necessary.

If an open circuit cannot be located:

- Replace Secondary Air Injection pump relay (J299) or Motronic Engine Control Module (J220) as necessary.

Activate Secondary Air Injection solenoid valve (N112):

- Press → button.

Output Diagnostic Test Mode →

Secondary Air Injection solenoid valve (N112)

Display will appear as shown:

The Secondary Air Injection solenoid valve must click.

If the relay does not click:

- Switch off ignition.

- Perform electrical check ⇒ Page 01-52 , test step Fig. 33 or locate short circuit using wiring diagram and correct as necessary.

If an open circuit cannot be located:

- Replace Secondary Air Injection solenoid valve (N112) or Motronic Engine Control Module (J220) as necessary.

If the relay clicks:

- Press → button.

Note:

After completion of the Output Diagnostic Test Mode, input 06 to select Function "End output" and confirm with Q.

- Switch off ignition.

01-41

Electrical wiring and component checks

Using VAG 1598 Test Box and VAG 1598/18 adaptor.

Notes:

- *Use the Fluke 83 multimeter and the VAG 1527B voltage tester for the following checks.*
- *The specifications given are valid for an ambient temperature from O to + 40 °C.*
- *If the measured figures deviate from the specifications, determine malfunction using wiring diagram.*
- *If the measured figures only deviate slightly from the specifications, clean sockets and plugs on the tester and measuring cables, then repeat check. Before replacing components check wiring and connections and particularly in cases of specifications less than 10 Ω repeat the resistance measurement on the component.*
- *To connect the testers to the Test Box use jumper cables from the VW 1594 adaptor kit.*
- *The terminal numbers of the plugs and the socket numbers in the Test Box are identical.*
- *Additional to the checks described in the table, if necessary, the wiring must also be checked for short to ground (-) or battery positive (+).*

- Battery voltage OK.
- Fuses18 and 21 OK.

01-42

- Ground connections on engine and transmission OK. (ground connection engine: on upper intake manifold support ⇒ Page 24-2 , item 9)

- Fuel pump and fuel pump relay OK.

- Switch off ignition.

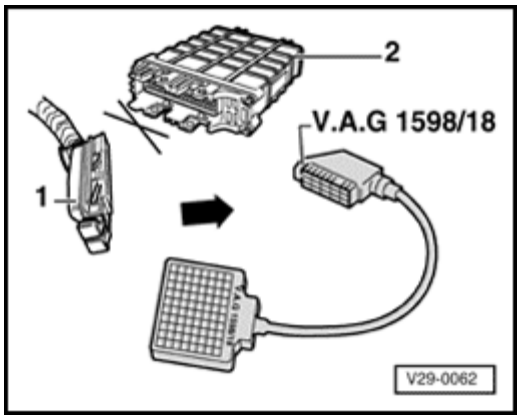

- Disconnect harness connector -1- from Motronic ECM (J220).
- Connect Test Box to ECM harness connector using adaptor harness VAG 1598/18.
- Perform electrical checks using the following table ⇒ Page 01-43

CAUTION

To prevent damage to sensitive electronic components, switch to the required measuring range before connecting the test leads, observe the test conditions and carry out the additional steps listed in the table.

Note:

After completing the electrical check, on vehicles with automatic transmission, the DTC display "Engine /Transmission electrical connection: open circuit" which is caused by performing the electrical check and is then stored in the ECM must then be erased, ⇒ Page 01-30 .

Test table

- Measuring range: Switch to voltage measurement-V-.				
Test step	**Item checked**	• Test conditions - additional work	**Test Box sockets**	**Specifications** [1]
	Motronic ECM (J220) DTC memory voltage supply	• Ignition switched off	1 + 54	Approx. battery voltage
	Motronic ECM (J220) DTC memory voltage supply via main relay (J271))	• Ignition switched off - Bridge sockets 9 + 55 on Test Box	1 + 23	Approx. battery voltage
	Wiring to fuel pump relay (J17)	• Switch ignition on	Bridge 6 + 55	Fuel pump must run audibly
	Mass Air Flow sensor (G70) voltage supply	• Ignition switched on - disconnect harness connector from Mass Air Flow sensor and connect multimeter to terminals 1 + 3 of connector[2]	Bridge 6 + 55	Approx. battery voltage

[1] Observe notes ⇒ Page 01-41

[2] Connector pin assignment ⇒ Page 01-56 , ⇒ Fig. 8

• Measuring range: Voltage measurement-V- selected.				
Test step	**Item checked**	• Test conditions - additional work	**Test Box sockets**	**Specifications** 1)
	Heated Oxygen sensor relay (J278)	• Ignition switched on - Separate connector to Oxygen sensor and connect multimeter to terminals 1 + 2 of connector 2) - Bridge sockets 1 + 6 of Test Box - Bridge sockets 9 + 55 of Test Box	- Bridge 1 + 28	Approx. battery voltage
	MIL lamp 3)	• Ignition switched on	Bridge 5 + 10	MIL lamp must light up

1) Observe notes ⇒ Page 01-41

2) Connector pin assignment ⇒ Page 01-54 , ⇒ Fig. 4

3) Only on vehicles with MIL lamp in instrument panel

• Measuring range: Voltage measurement-V- selected				
Test step	**Item checked**	• Test conditions - additional work	**Test Box sockets**	**Specifications** [1]
	Ground wire 7[2]	-----	7 + 54	Approx. battery voltage
	Park/Neutral position relay (J226) [3]	• Selector lever in position "P" - disconnect (5 pin) connector from ignition coil - Operate starter	1 + 7	Approx. 2 Volts below battery Voltage
	Speedometer Vehicle Speed sensor (G22)	• Ignition switched on - Lift front left wheel and turn	56 + 65	Fluctuates between 0 and 10 Volts
[4]	Wiring from A/C (not on Climatronic)	• Ignition switched on - Switch on A/C	39 + 55	Approx. battery voltage
[4]	Wiring to A/C compressor	• Ignition switched on	Briefly bridge 37 + 38	A/C compressor clutch must be heard to switch

[1] Observe notes ⇒ Page 01-41

[2] Only for vehicles with manual transmission

[3] Only for vehicles with automatic transmission

[4] Only for vehicles with A/C

01-46

- Switch off ignition. - Measuring range: Switch to resistance measurement - Ω-.				
Test step	**Item checked**	• Test conditions - additional work	**Test Box sockets**	**Specifications** [1]
	Wiring for injector Cyl. 1 (N30)	-----	23 + 24	15...21.5 Ω
	Wiring for injector Cyl. 2 (N31)	-----	3 + 23	15...21.5 Ω
	Wiring for injector Cyl. 3 (N32)	-----	23 + 26	15...21.5 Ω
	Wiring for injector Cyl. 4 (N33)	-----	4 + 23	15...21.5 Ω
	Wiring for injector Cyl. 5 (N83)	-----	23 + 25	15...21.5 Ω
	Wiring for injector Cyl. 6 (N84)	-----	2 + 23	15...21.5 Ω
	Wiring for EVAP canister purge regulator valve 1 (N80)	-----	23 + 31	40...80 Ω
2)	Wiring for Engine Coolant Temperature sensor (G62)	-----	14 + 33	⇒ Page 01-53 , ⇒ Fig. 1

1) Observe notes ⇒ Page 01-41

2) If the On Board Diagnostic indicates a sensor malfunction which is not established by this test, it could be caused by a temporary break in the temperature signal. In this case, additionally check the Engine Coolant Temperature sensor ⇒ Page 24-36 .

01-47

• Ignition switched off • Measuring range: Resistance measurement - Ω- selected				
Test step	**Item checked**	• Test conditions - additional work	**Test Box sockets**	**Specifications** [1]
	Wire to Data Link Connector (DLC)	-----	21 + DLC terminal 5[2]	Max. 1.5 Ω
			43 + DLC terminal 7[2]	
	Wiring to Heated Oxygen sensor (G39)	- Disconnect harness connector to Oxygen sensor - Bridge terminals 3 + 4 of connector[3]	20 + 42	max. 1.5 Ω
		- Reconnect harness connector		∞ Ω

[1] Observe notes ⇒ Page 01-41

[2] Connector pin assignment ⇒ Page 01-54 , ⇒ Fig. 3

[3] Connector pin assignment ⇒ Page 01-54 , ⇒ Fig. 4

01-48

- Ignition switched off
- Measuring range: Resistance measurement - Ω- selected

Test step	Item checked	• Test conditions - additional work	Test Box sockets	Specifications [1]
	Wiring for Throttle Position sensor (G69)	-----	33 + 41	1.50...2.50 kΩ
		• Throttle closed	33 + 40	0.70...1.30 kΩ
		- Open throttle		Resistance must increase
		• Throttle closed	40 + 41	2.50...3.50 kΩ
		- Open throttle		Resistance must decrease
	Wiring for Camshaft Position sensor (G40)	- Disconnect harness connector from -G40 - Bridge connector terminals 1 + 3[2]	23 + 56	max. 1.5 Ω
		- Bridge connector terminals 2 + 3[2]	44 + 56	

[1] Observe notes ⇒ Page 01-41

[2] Connector pin assignment ⇒ Page 01-55 , ⇒ Fig. 5

- Ignition switched off
- Measuring range: Resistance measurement - Ω- selected

Test step	Item checked	• Test conditions - additional work	Test Box sockets	Specifications 1)
	Wiring to ignition coil (N152)	- Disconnect power output stage harness connector - Bridge connector terminals 1 + 2 2)	8 + 55	max. 1.5 Ω
		- Bridge connector terminals 1 + 3 2)	55 + 60	max. 1.5 Ω
		- Bridge connector terminals 1 + 4 2)	52 + 55	max. 1.5 Ω
		• Bridge connector terminals 1 + 5 2)	38 + 55	max. 1.5 Ω
	Wiring to knock sensor 1 (G61) 3 pin connector (white) on rear engine mount	- Disconnect knock sensor harness connector	33 + 34	∞ Ω
		- Bridge connector terminals 1 + 2 3)		max. 1.5 Ω
		- Bridge connector terminals 1 + 3 3)	34 + 56	max. 1.5 Ω

1) Observe notes ⇒ Page 01-41

2) Connector pin assignment ⇒ Page 01-55 , ⇒ Fig. 6

3) Connector pin assignment ⇒ Page 01-56 , ⇒ Fig. 7

01-50

- Ignition switched off
- Measuring range: Resistance measurement - Ω- selected

Test step	Item checked	• Test conditions - additional work	Test Box sockets	Specifications [1]
	Wiring for Intake Air Temperature sensor (G72)	----	33 + 36	⇒ Page 01-53 , ⇒ Fig. 1
	Wiring for Idle Air Control valve (N71)	----	27 + 53	6...12 Ω
	Wiring to knock sensor 2 (G66) 3 pin connector (black) near starter	- Disconnect knock sensor harness connector	33 + 56	∞ Ω
		- Bridge connector terminals 2 + 3[2]		max. 1.5 Ω
		- Bridge connector terminals 1 + 3[2]	56 + 57	

[1] Observe notes ⇒ Page 01-41

[2] Connector pin assignment ⇒ Page 01-56 , ⇒ Fig. 7

01-51

- Ignition switched off
- Measuring range: Resistance measurement - Ω- selected

Test step	Item checked	• Test conditions - additional work	Test Box sockets	Specifications 1)
	Wiring to Mass Air Flow sensor (G70)	- Disconnect Mass Air Flow sensor harness connector - Bridge connector terminals 2 + 4 2)	16 + 17	max. 1.5 Ω
	Wiring for Engine Speed sensor (G28) 3 pin connector (white) near starter	----	67 + 68	500...700 Ω
			56 + 67 56 + 68	∞ Ω
3)	Exhaust Gas Recirculation (EGR) valve (N18)	- Bridge sockets 30 + 55 of Test Box	Briefly bridge 9 + 56	Valve must audibly click
3)	Wiring for Exhaust Gas Recirculation (EGR) valve (N18)	- Disconnect EGR valve harness connector - Bridge connector terminals 1 + 2	23 + 30	max. 1.5 Ω

1) Observe notes ⇒ Page 01-41

2) Connector pin assignment ⇒ Page 01-56 , ⇒ Fig. 8

3) Only for vehicles with Exhaust Gas Recirculation (EGR) system

01-52

• Ignition switched off • Measuring range: Resistance measurement - Ω- selected				
Test step	**Item checked**	• Test conditions - additional work	**Test Box sockets**	**Specifications** [1]
2)	Wiring for EGR Temperature sensor (G98)[2]	----	15 + 33	⇒ Page 01-53 , ⇒ Fig. 2
3)	Secondary Air Injection pump relay (J299)	- Bridge sockets 9 + 55 of Test Box	Briefly bridge 1 + 49	Relay must audibly click
	Secondary Air Injection pump motor (V101)	- Sockets 9 + 55 of Test Box		Secondary Air Injection pump motor must run
	Secondary Air Injection solenoid valve (N112)	• Sockets 9 + 55 of Test Box bridged - Disconnect Secondary Air Injection pump motor harness connector	Briefly bridge 1 + 50	Valve switch-over must be felt

[1] Observe notes ⇒ Page 01-41

[2] Only for vehicles with Exhaust Gas Recirculation (EGR) system

[3] Only for vehicles with Secondary Air Injection system

01-53

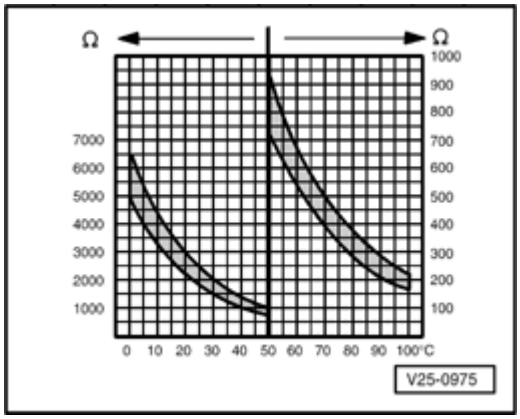

Fig. 1 Resistance graph for

- Engine Coolant Temperature sensor (G62)
- Intake Air Temperature sensor (G72)

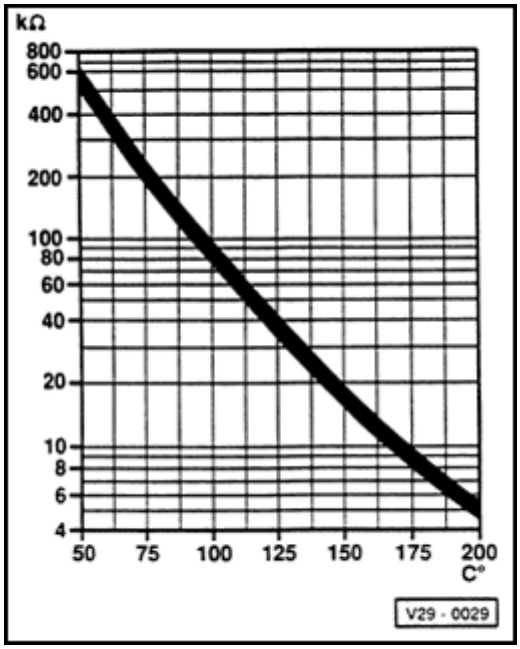

Fig. 2 Resistance graph for Exhaust Gas Recirculation (EGR) Temperature sensor (G98)

01-54

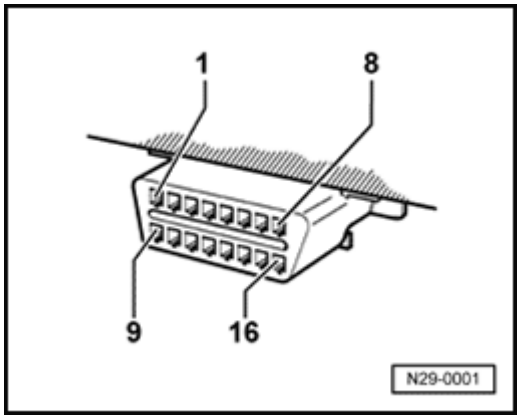

Fig. 3 Data Link Connector (DLC) terminal numbering.

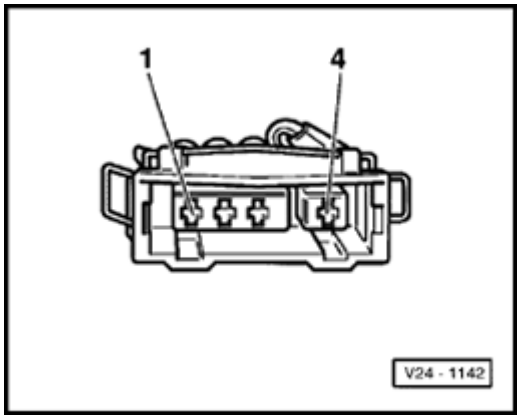

Fig. 4 Heated Oxygen sensor (G39) harness connector terminal numbering

01-55

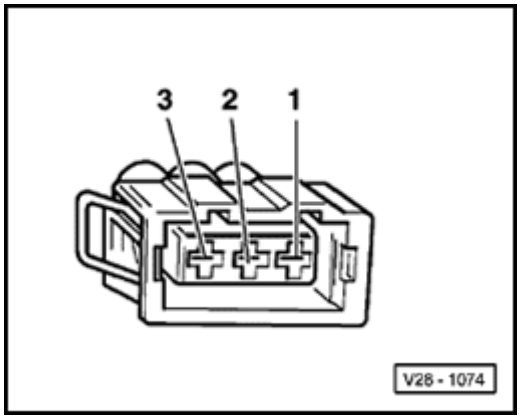

Fig. 5 Camshaft Position sensor (G40) harness connector terminal numbering

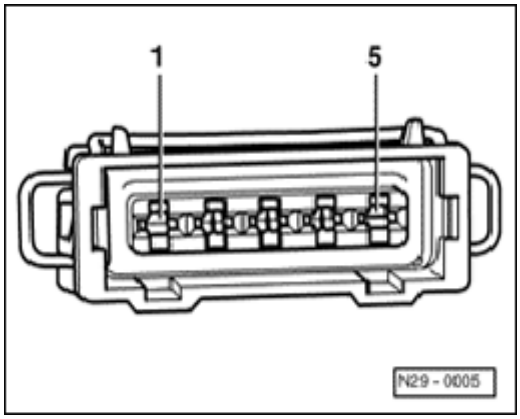

Fig. 6 Ignition coil (N152) harness connector terminal numbering

01-56

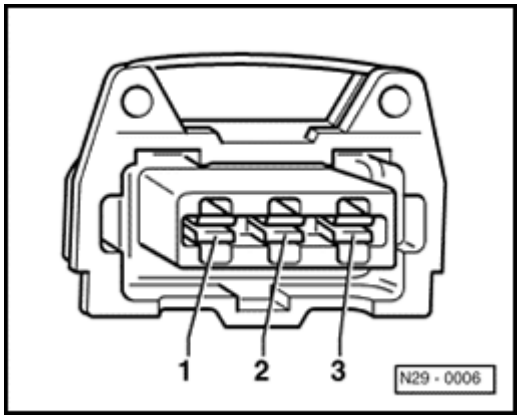

Fig. 7 Knock sensor 1 (G61) and knock sensor 2 (G66) harness connector terminal numbering

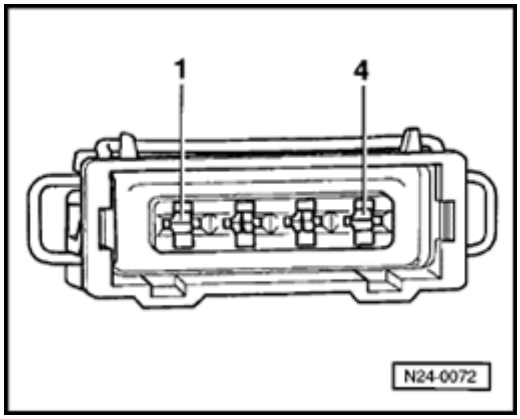

Fig. 8 Mass Air Flow sensor (G70) harness connector terminal numbering

24-1

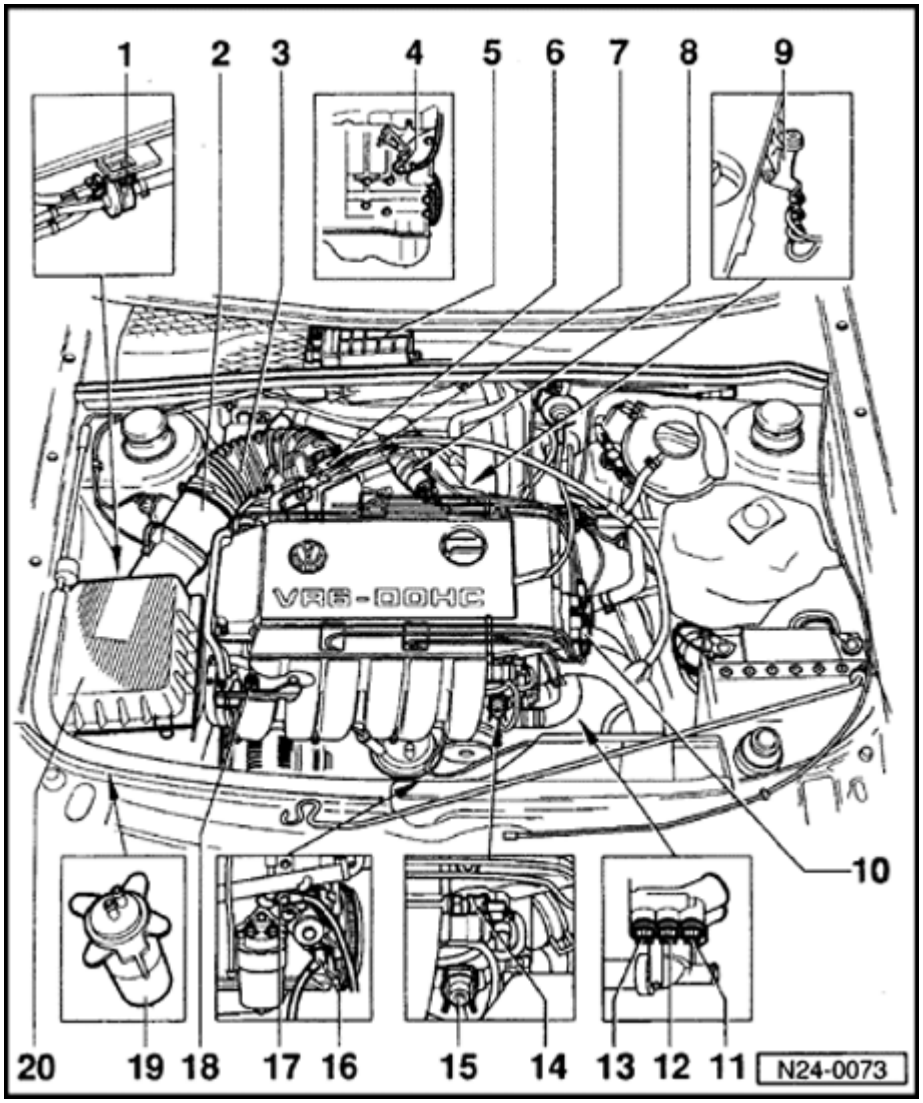

Motronic Fuel Injection and Ignition system, component layout

1 - EVAP canister purge regulator valve 1 (N80)

- EVAP emissions system:

⇒ *Repair Manual, 2.8 Liter VR6 2V Engine Mechanical, Engine Code(s): AAA, Repair Group 20*

2 - Mass Air Flow sensor (G70)

3 - Intake hose

- With connection for Idle Air Control and Positive Crankcase Ventilation (PCV)

heating element (N79)

4 - Knock sensor 1 (G61)

- ⇒ Page 28-1 , item 12

24-2

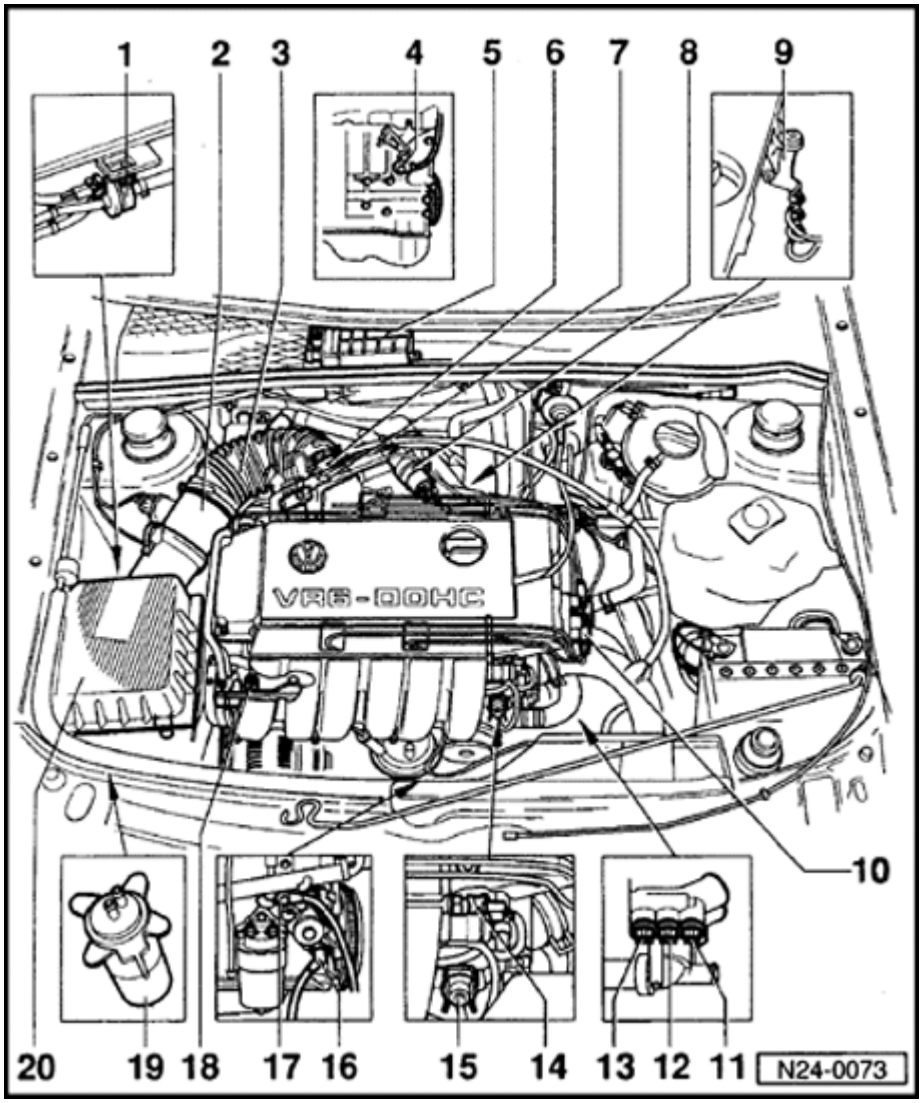

5 - Motronic Engine Control Module (ECM) (J220)

6 - Throttle Body

- Heated by coolant

7 - Throttle Position sensor (G69)

8 - Idle Air Control valve (N71)

9 Ground - connection10

11 - Ignition coil (N152)

- ⇒ Page 28-1 , item 6

12 - A/C Cut-Out Thermal switch (F163) and Third Speed Coolant Fan Control thermal switch (F165)

- Brown, 4-pin

- On vehicles with A/C

24-3

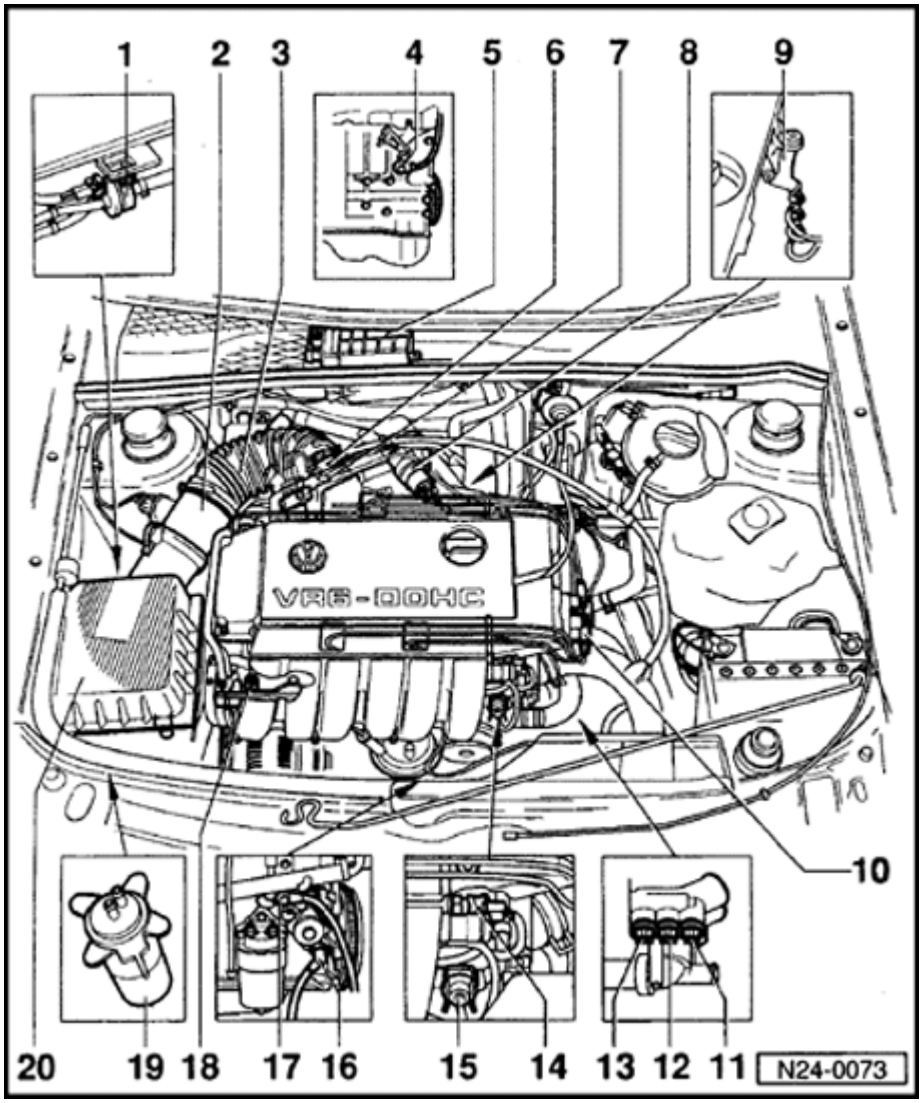

13 Engine - Coolant Temperature (ECT) sensor (G62)

- Blue, 2-pin
- For Motronic

14 After-Run - Coolant Fan Control thermal switch for Engine Coolant Temperature sensor (F87 / G2)

- Yellow, 4-pin

15 Intake Air - Temperature sensor (G72)

16 - Fuel pressure regulator

17 - Engine speed (RPM) sensor (G28)

18 - Knock sensor 2 (G66)

- ⇒ Page 28-1 , item 10

19 - Fuel Injector(s) (N30 ,N31, N32, N33, N83, N84)

24-4

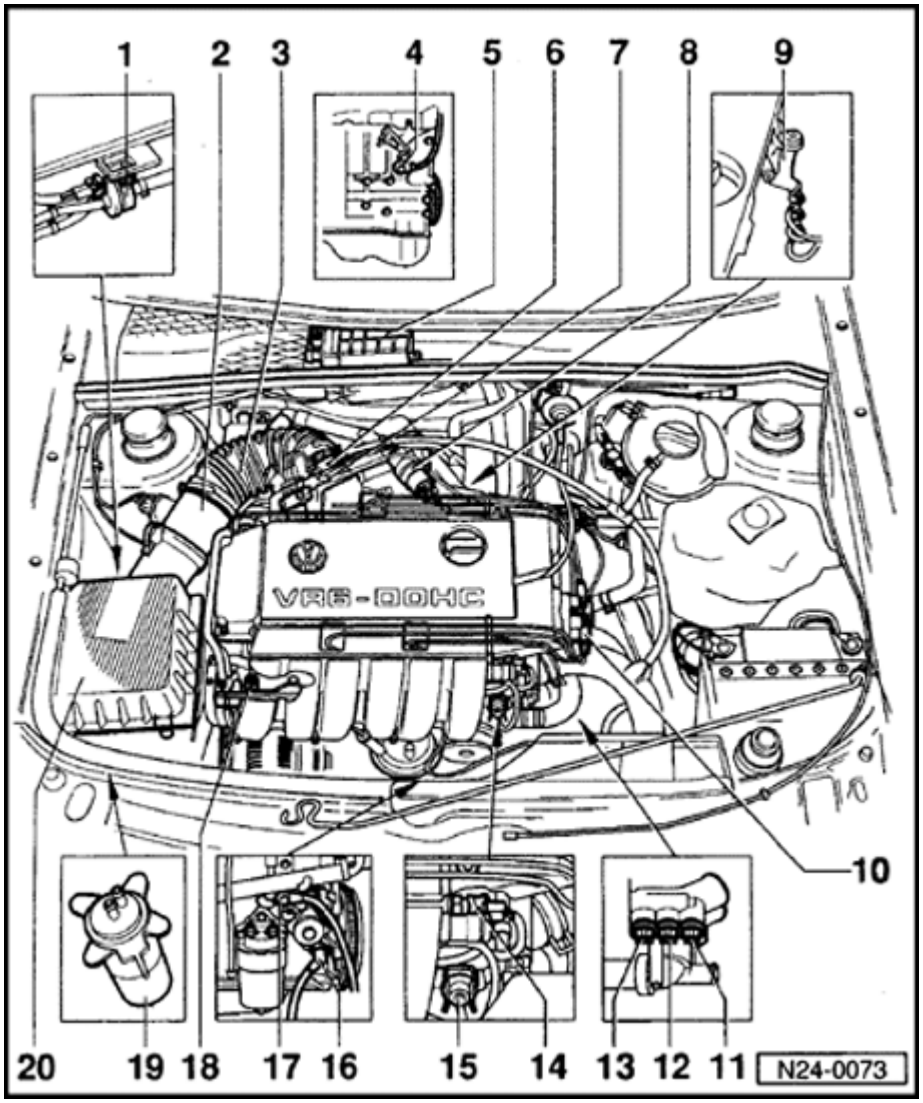

20 - EVAP canister

- Below Air Cleaner
- Evaporative emissions system:

⇒ *Repair Manual, 2.8 Liter VR6 2V Engine Mechanical, Engine Code(s): AAA, Repair Group 20*

21 - Air Cleaner

Motronic Fuel Injection system, servicing

Ignition system, servicing, ⇒ Page 28-1

Notes:

- *The Engine Control Module (ECM) for the combined fuel injection and ignition system control is equipped with a Diagnostic Trouble Code (DTC) memory. Before performing repairs, adjustment work and troubleshooting, the DTC memory must be checked and all vacuum connections checked (for unmetered air).*
- *Components marked with an * are checked via On Board Diagnostic, ⇒ Page 01-5 .*
- *Components marked with ** are checked via Output Diagnostic Test Mode (DTM) ⇒ Page 01-32 .*
- *Always replace spring-type hose clips with screw-type hose clips.*
- *10.5 Volts minimum is required for trouble-free electrical component operation.*
- *Do not use any sealants or products containing silicone. Silicone particles drawn into the engine are not consumed during combustion and can damage the Oxygen sensor.*

Safety precautions ⇒ Page 24-23

Rules for cleanliness ⇒ Page 24-24

Technical data ⇒ Page 24-25

24-6

Engine operation, checking ⇒ Page 24-29 .

On Board Diagnostic and electrical check of Motronic fuel injection and ignition system ⇒ Repair group 01 (Fuel and Ignition).

24-7

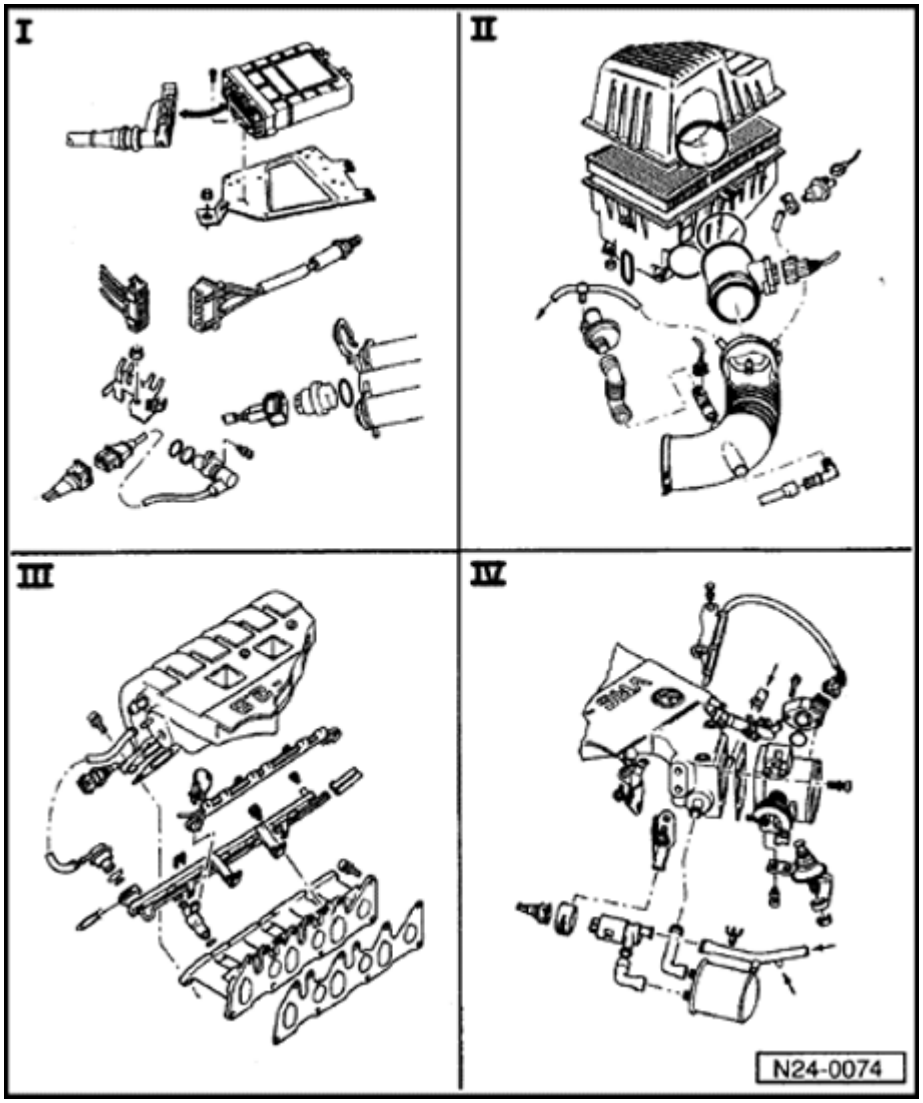

I - Engine Control Module (ECM), Oxygen sensor, Engine Coolant Temperature sensor and Engine Speed (RPM) sensor, removing and installing ⇒ Page 24-8 .

II - Air Cleaner, Mass Air Flow sensor, Positive Crankcase Ventilation heating element, removing and installing ⇒ Page 24-12

III - Fuel rail and intake manifold, removing and installing ⇒ Page 24-15

IV - Throttle body,

Throttle Position sensor and Idle Air Control valve, removing and installing
⇒ **Page 24-18** .

24-8

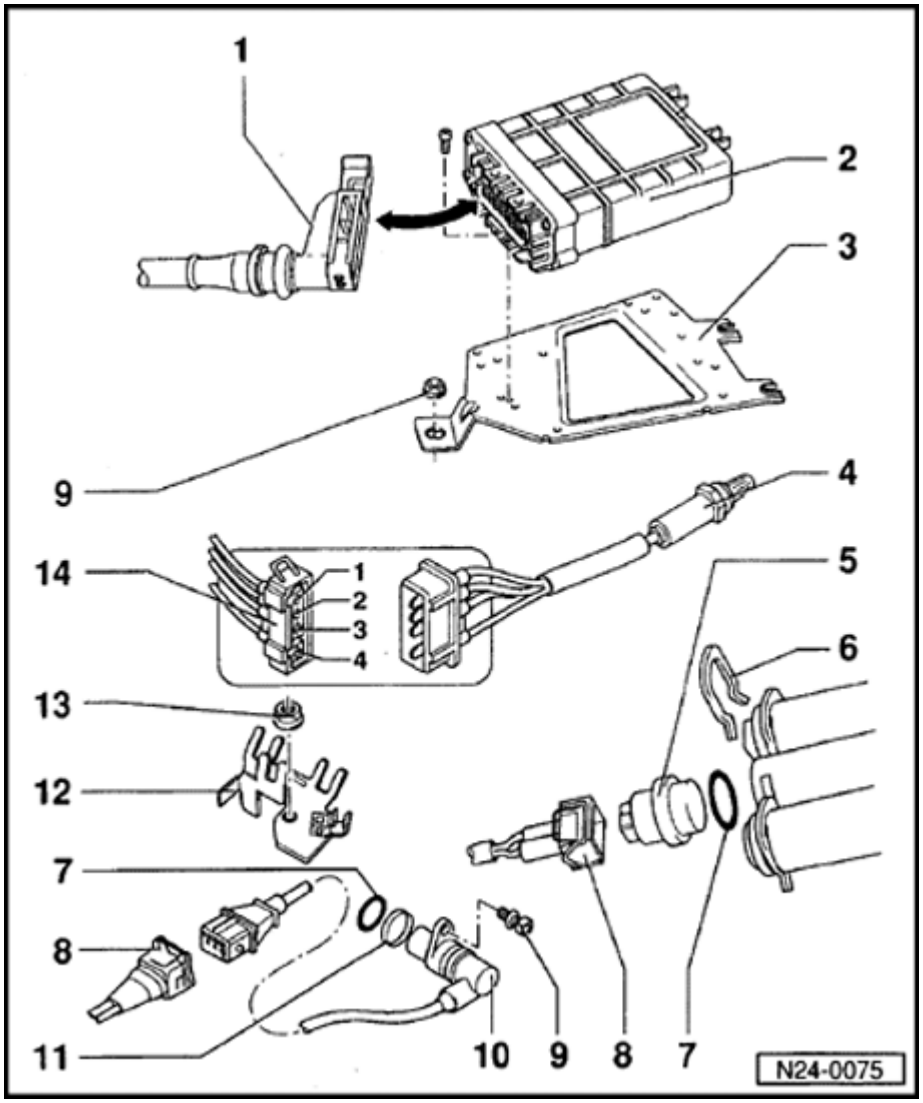

Engine Control Module (ECM), Oxygen sensor, Engine Coolant Temperature sensor and Engine Speed (RPM) sensor, removing and installing

1 - Connector

- Only disconnect or connect with ignition switched off
- Unlatch to disconnect

2 - Motronic Engine Control Module (J220)*

- Location: in right side of plenum chamber
- For: Fuel injection system, Oxygen regulation, EVAP canister purge regulator valve 1, engine speed

governing via fuel pump relay, idle speed control, Ignition and On Board Diagnostic.

24-9

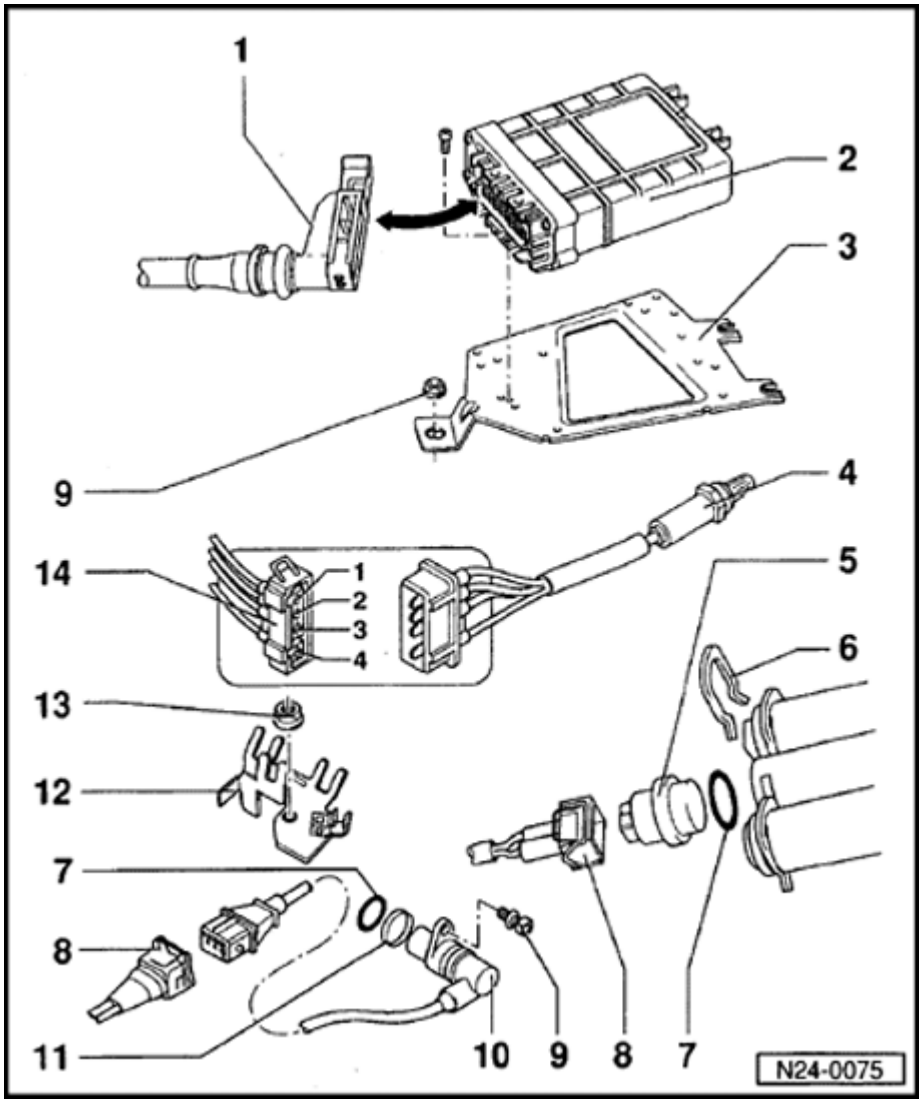

3 - Mounting plate

- For Motronic Engine Control Module (ECM) (J220)

4 - Heated Oxygen sensor (G39)*

- 50 Nm (37 ft lb)
- Fitting location: three-way catalyst
- Only coat threads with "G5"; do NOT allow "G5" to get into the slots of the sensor body

5 - Engine Coolant Temperature sensor (G62)*

- Blue, 2-pin
- For Motronic

- Checking ⇒ Page 24-37
- If necessary, release pressure from cooling system before removing

6 - Retaining clip

- Ensure that it is securely seated

24-10

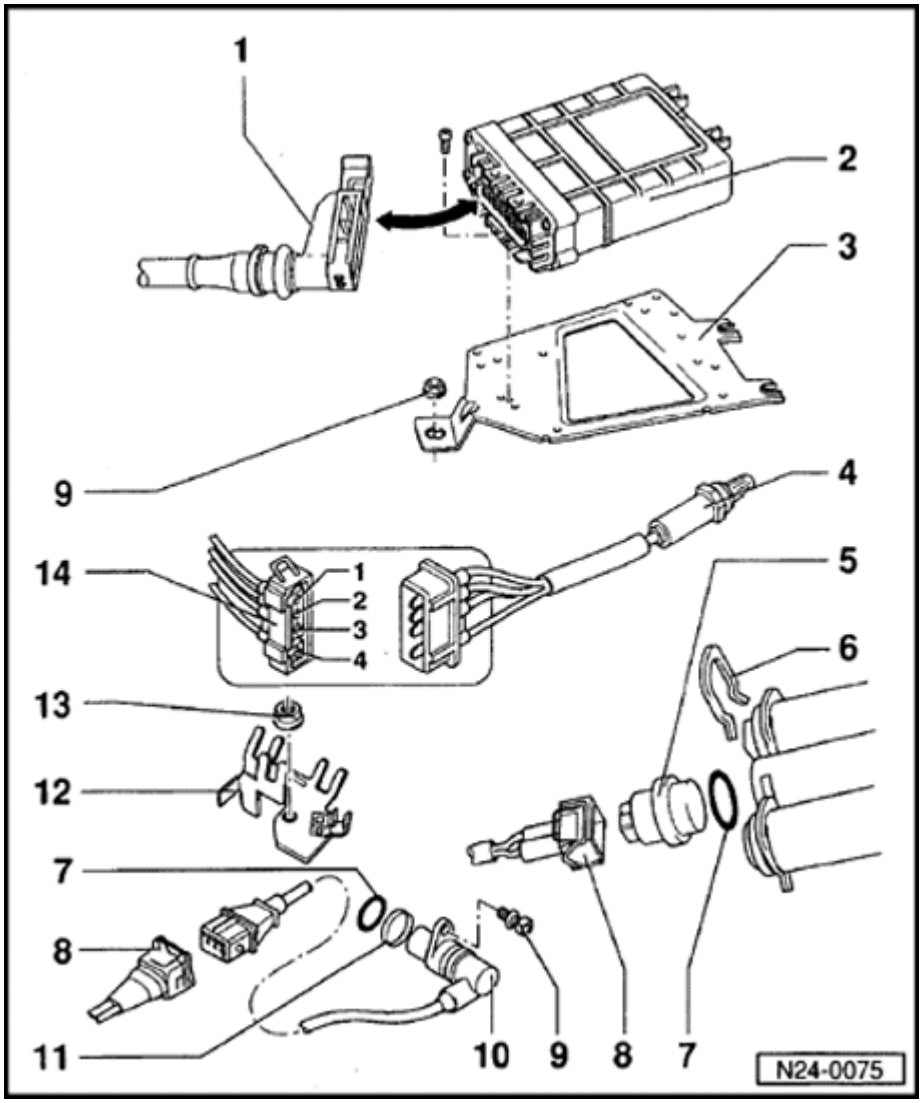

7 - O-ring

- replace if damaged

8 - Harness Connector

9 - 10 Nm (7 ft lb)

10 - Engine Speed (RPM) sensor (G28)*

- Location: engine block intake side

11 - Spacer ring

12 - Mounting bracket

- For Heated Oxygen sensor and Knock sensor 1 harness connectors

13 - 20 Nm (15 ft lb)

24-11

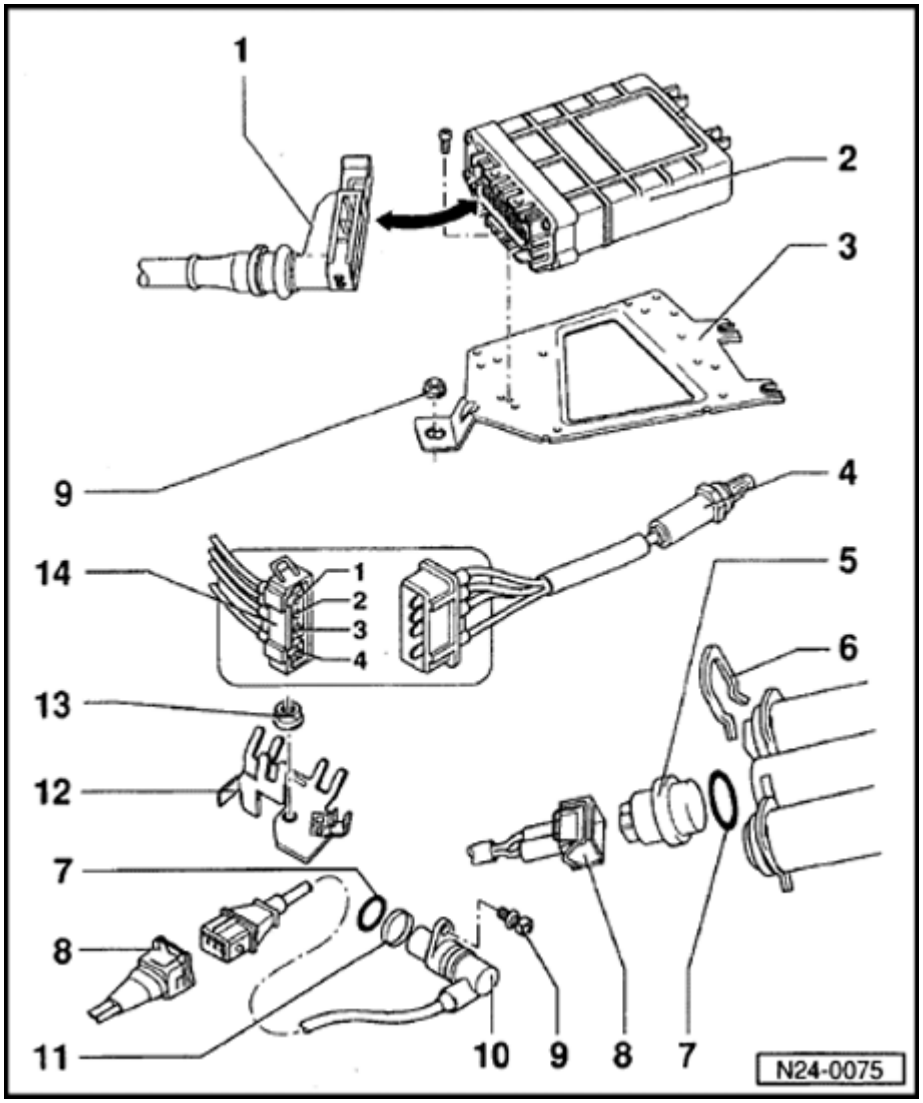

14 - Harness connector

- 4 pin
- For Heated Oxygen sensor and Oxygen sensor heater
- Mounted to right-hand rear engine mounting, in direction of travel
- With ignition switched on check Oxygen sensor basic Voltage between terminals 3 and 4, must be approx. 0.5 Volts
- Check Oxygen sensor heater Voltage supply ⇒ Page 01-42 , Electrical checks,

test step
Fig. 5

24-12

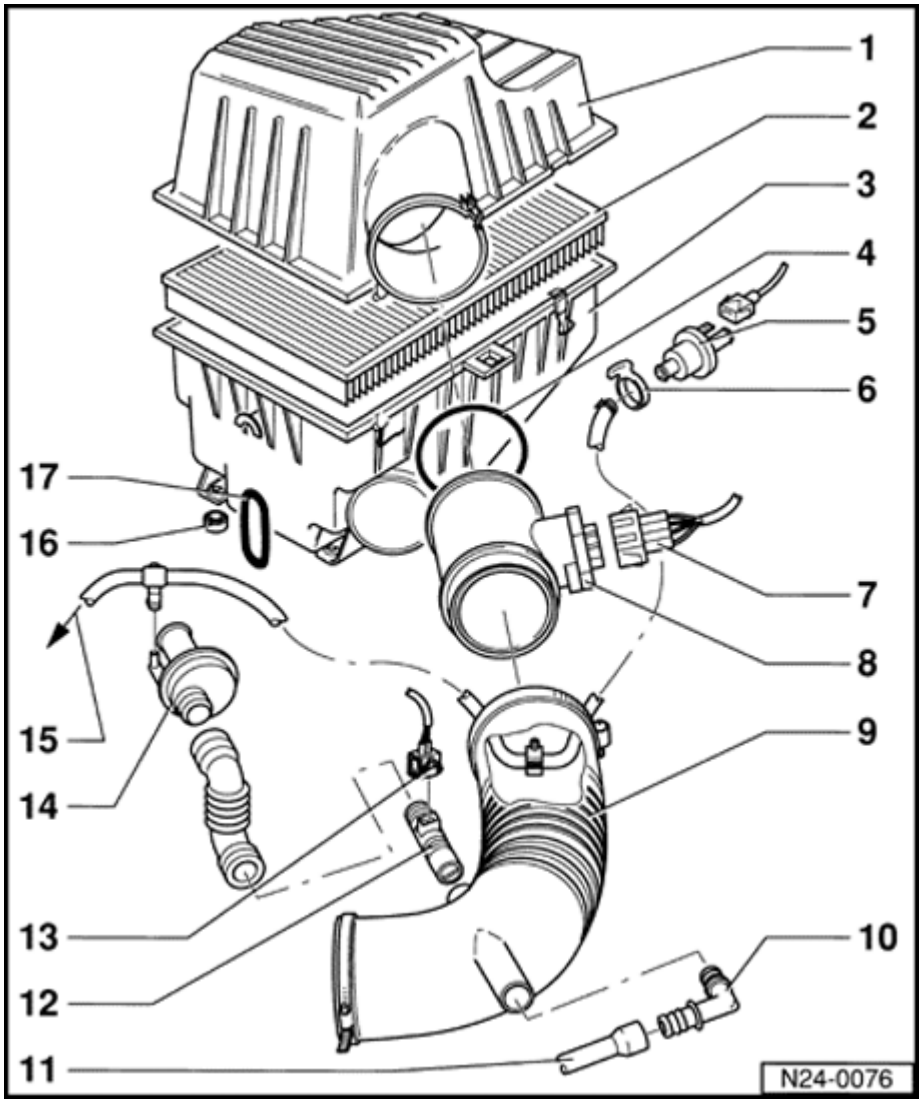

Air Cleaner, Mass Air Flow sensor, Positive . Crankcase Ventilation heating element, removing and installing

1 - Air Cleaner upper section

2 - Filter element

3 - Air cleaner lower section

4 - O-ring

- replace if damaged

5 - EVAP canister purge regulator valve 1 (N80)*/**

- EVAP system

⇒ *Repair Manual, 2.8 Liter VR6 2V Engine Mechanical, Engine Code(s): AAA, Repair Group 20*

6 - Retaining ring

- For N 80

24-13

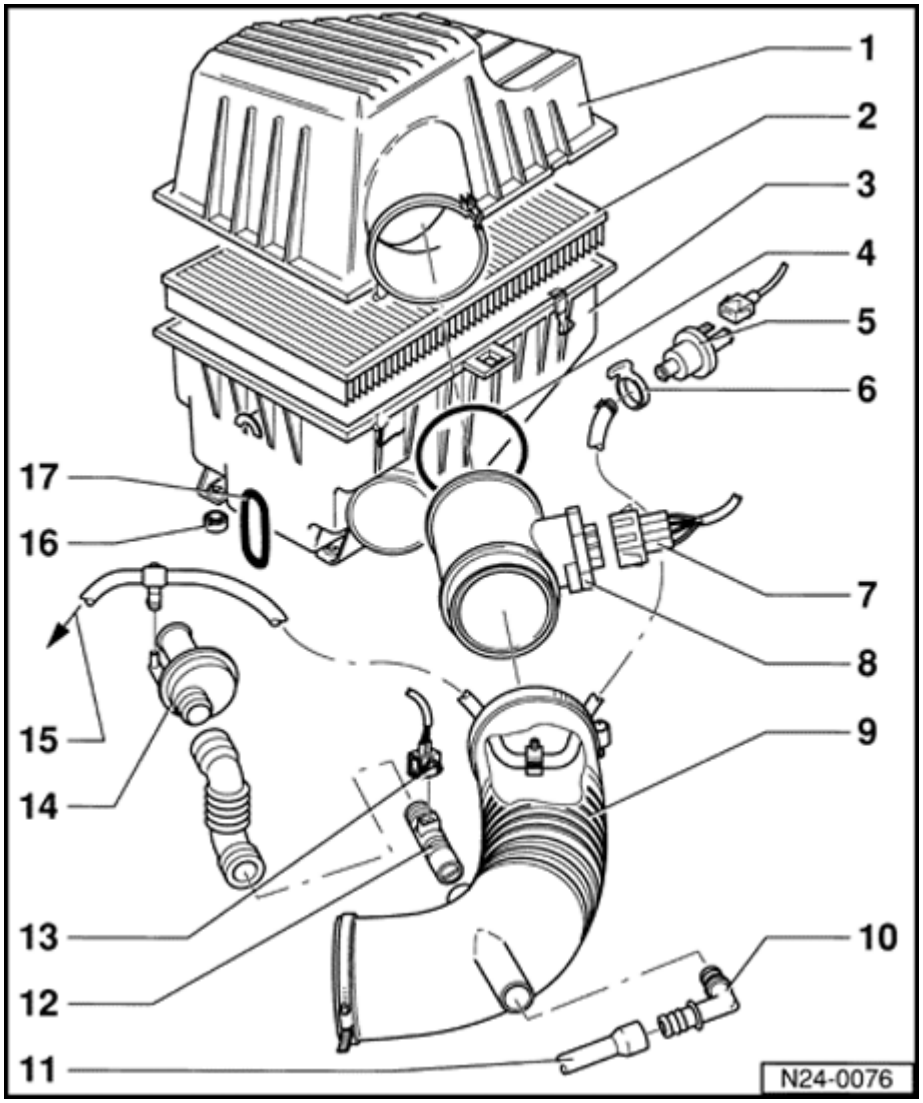

7 - Harness connector

- 4 pin
- For Mass Air Flow sensor (G70)
- Check Oxygen sensor heater Voltage supply ⇒ Page 01-42 , Electrical checks, test step Fig. 4

8 - Mass Air Flow (G70) *

9 - Intake hose

10 - Elbow

11 - Hose

- For Idle Air Control
- From silencer ⇒ Page 24-18 , item 14

12 - Positive Crankcase Ventilation (PCV) heating element

(N79)

- For crankcase breather
- Arrow on heater element shows air flow direction
- Resistance at ambient temperature (approx. 25 °C) Specification: 7 to 12 Ω

24-14

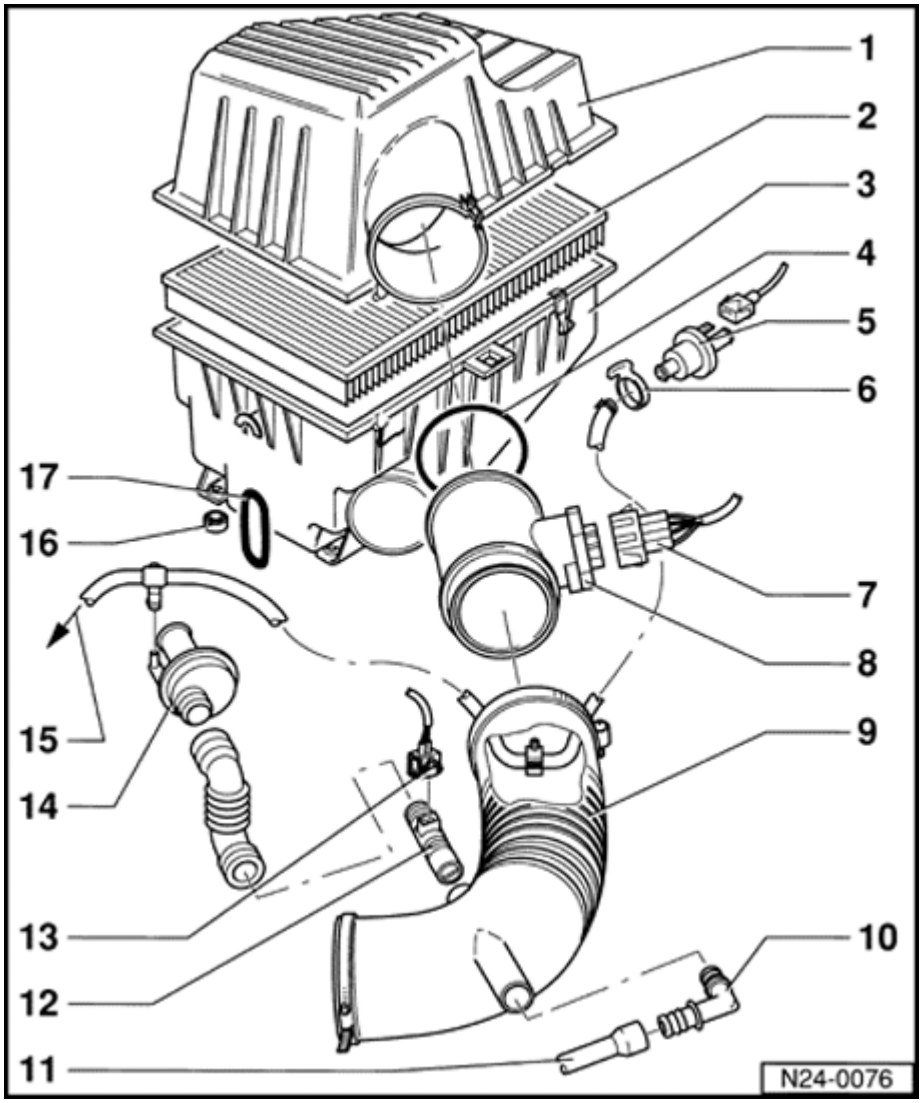

13 - Harness Connector

- 2 pin
- For PCV heating element (N79)
- Check Oxygen sensor heater Voltage between terminals 1 and 2 with ignition switched on must be approx. battery Voltage.

14 - PCV breather valve

15 - To intake manifold upper section

- ⇒ Page 24-18 , item 5

16 - Rubber washer

17 - Retaining ring

24-15

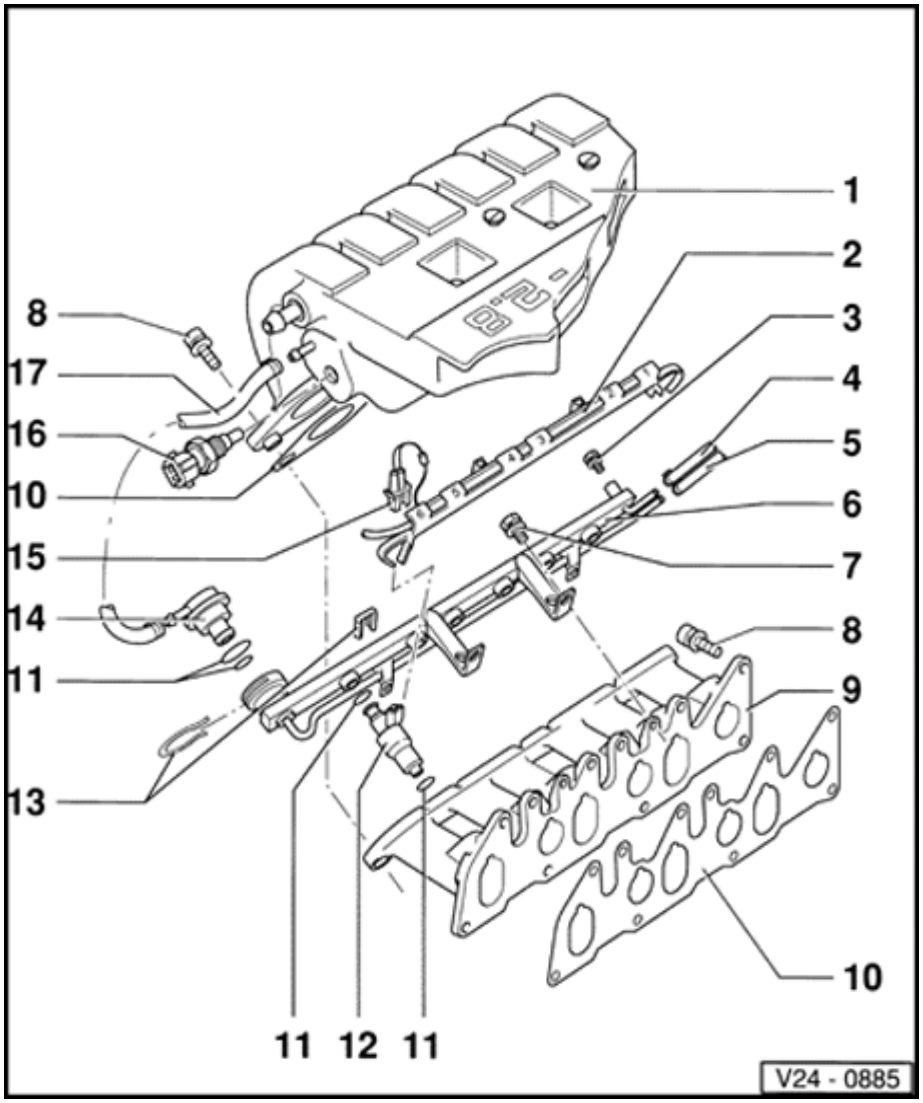

Fuel rail and intake manifold, removing and installing

1 - Intake manifold - upper section

2 - Wiring guide

3 - Sealing plug

- For test connection

4 - Supply line

- White marking

5 - Return line

- Blue marking

6 - Fuel rail

- Removing and installing ⇒ Page 24-41

7 - 10 Nm (7 ft lb)

8 - 25 Nm (18 ft lb)

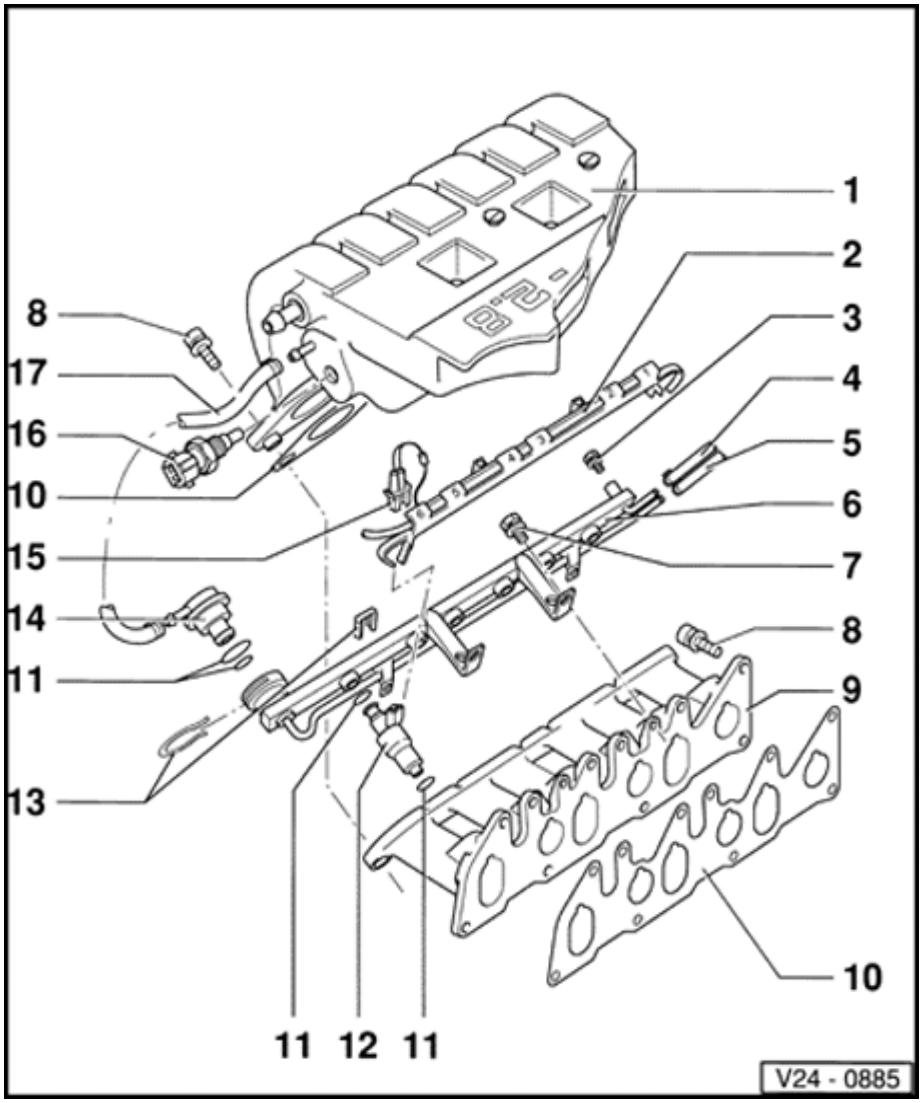

9 - Intake manifold - lower section

10 - Gasket

- replace

11 - O-ring

- replace if damaged

12 - Injector(s) (N30, N31, N32, N33, N83, N84) */**

- Removing and installing ⇒ Page 24-41
- Checking ⇒ Page 24-43

13 - Retaining clip

- Ensure that it is securely seated

14 - Fuel pressure regulator

- Checking ⇒ Page 24-39

15 - Connector

- 2 pin
- For

injector
(s) (N30,
N31,
N32,
N33,
N83,
N84)

24-17

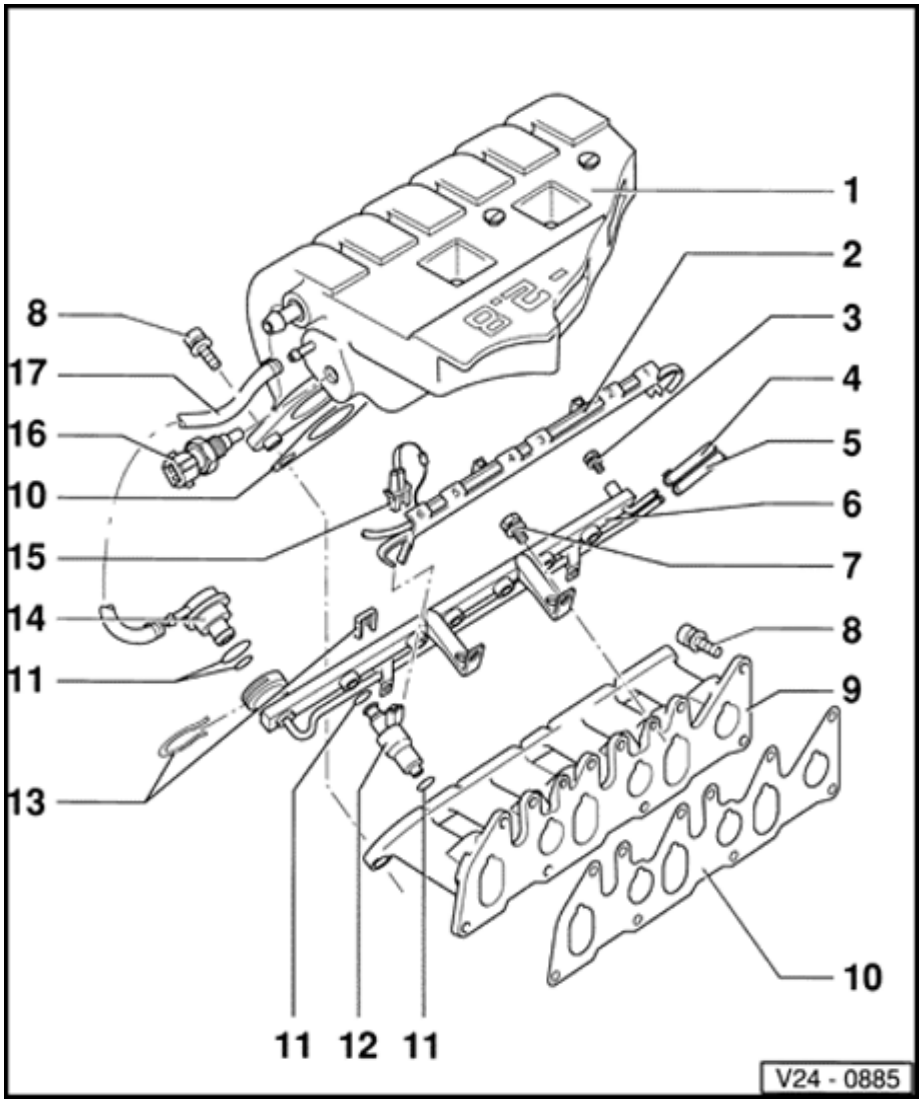

16 Intake Air - Temperature sensor (G72)*

- 10 Nm (7 ft lb)
- Checking ⇒ Page 24-35

17 - Vacuum line

- replace if damaged
- Ensure that it is securely seated

24-18

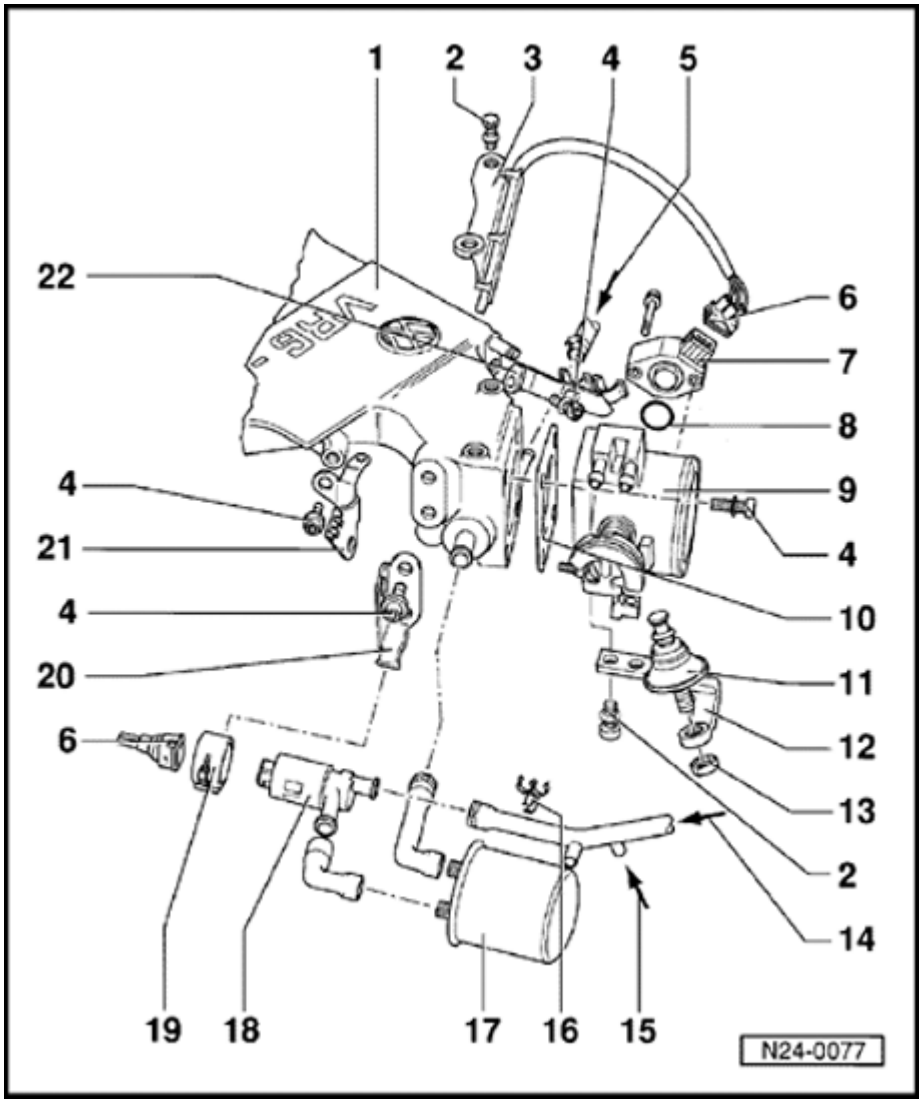

Throttle body, Throttle Position sensor and Idle Air Control valve, removing and installing

1 - Intake manifold - upper section

- First tighten to intake manifold lower section and then both rear supports ⇒ items 21 and 22

2 - 10 Nm (7 ft lb)

3 - Wiring guide

4 - 25 Nm (18 ft lb)

5 - Breather hose

- From EVAP canister purge regulator valve 1 (N80) ⇒ Page 24-12 , item 15

6 - Harness

connector

24-19

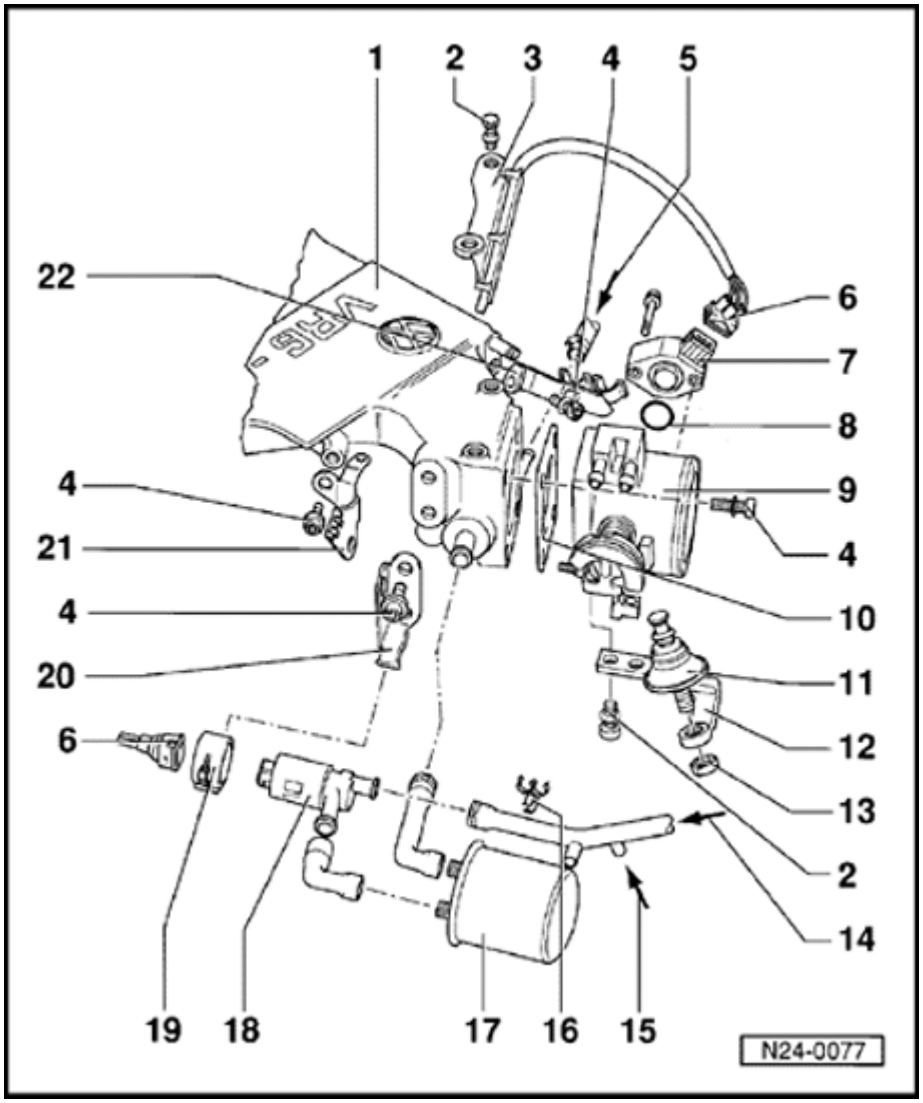

7 - Throttle Position sensor (-G69)*

- 3 pin

- For Motronic system with automatic transmission
  - Checking ⇒ Page 24-32

- Only for automatic transmission, after removing and installing the Throttle Position sensor, the Transmission Control Module (TCM) (J217) and the Throttle Position sensor (G69) must be matched to one another ⇒ Page 24-34
  - Check Voltage supply with ignition switched on at terminals 1 and 3

Specified value: approx. 5.0 Volts

8 - O-ring

- replace if damaged

24-20

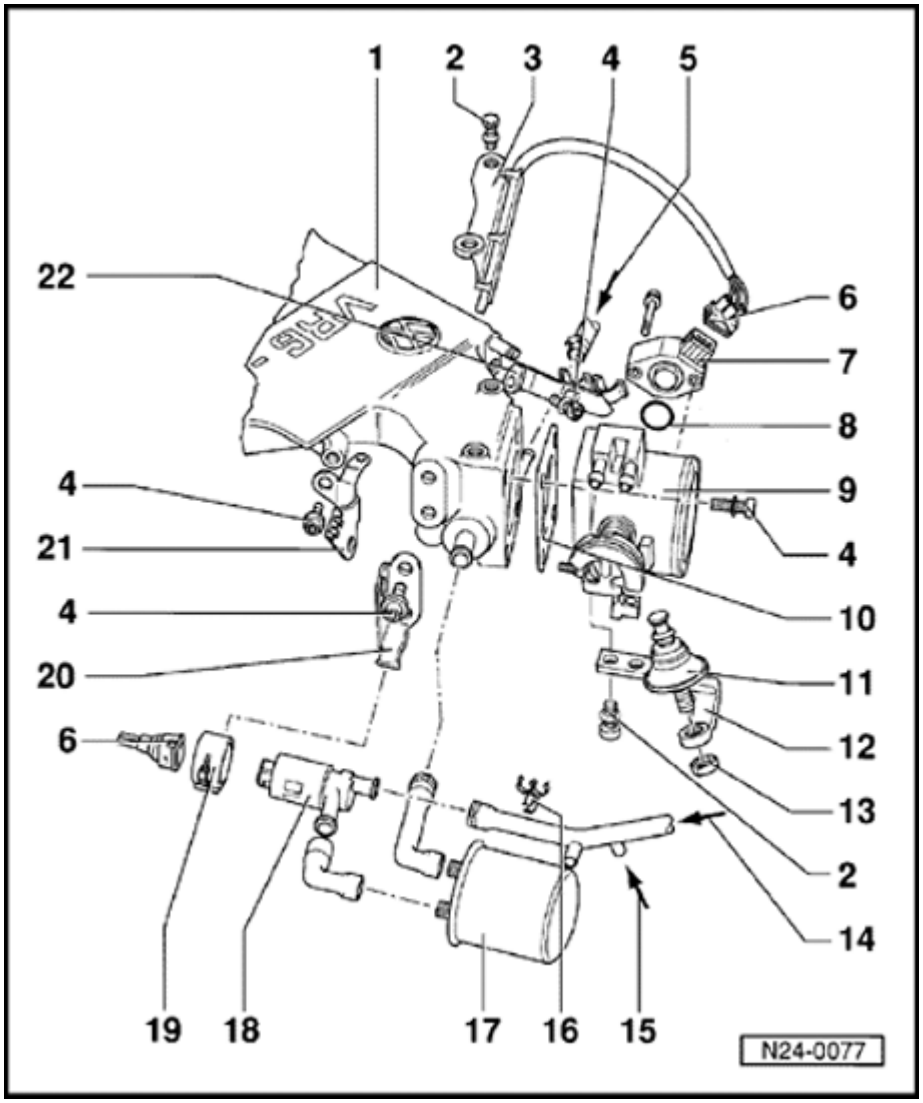

9 - Throttle Body

- Heated by coolant
- If throttle valve basic setting stop screw has been altered, replace throttle valve housing

- Only for automatic transmission: after replacing the Throttle Position sensor, the TCM (J217) and the Throttle Position sensor (G69) must be matched to one another ⇒ Page 24-34

10 - Gasket

- replace

11 - Throttle damper

- Checking and adjusting

⇒ Page 24-46

12 - Bracket

- For throttle damper

24-21

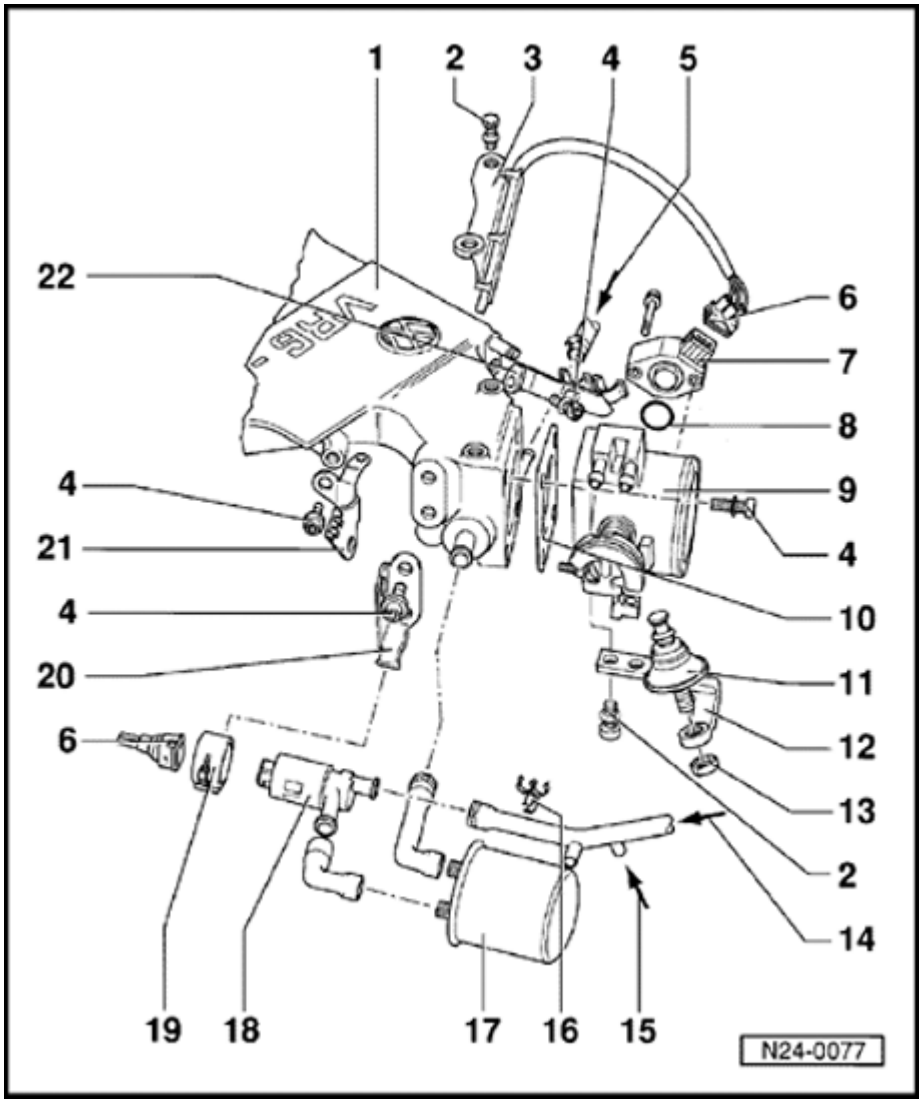

13 - 20 Nm (15 ft lb)

14 - From intake air hose

- ⇒ Page 24-12 , item 11

15 From - Exhaust Gas Recirculation (EGR) valve (G98)

- Only for vehicles with EGR system

16 - Retaining clip

- For coolant hoses

17 - Silencer

- For Idle Air Control

18 - Idle Air Control valve (N71)* /**

- Resistance between terminals 1 + 2 must be 6 to12 Ω

24-22

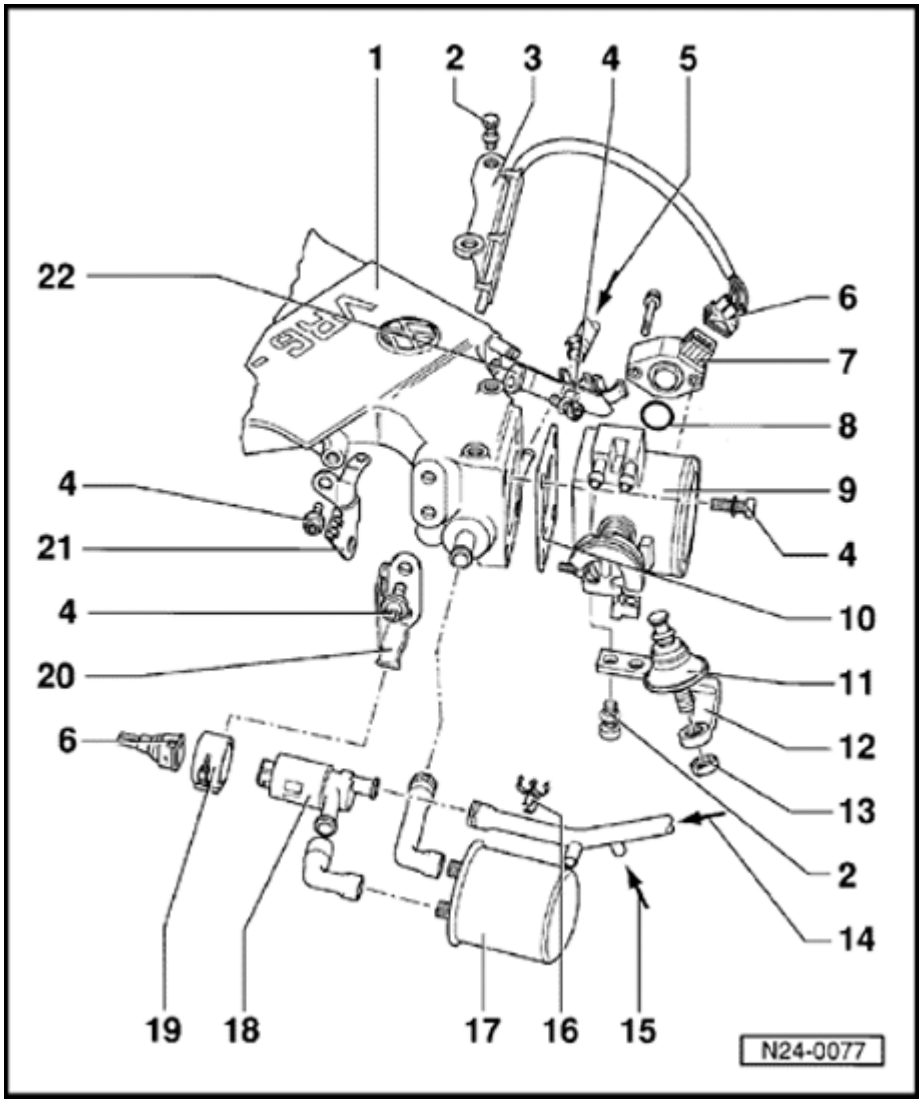

19 - Retaining ring

- For Idle Air Control valve

20 - Bracket

- For Idle Air Control valve
- With support for accelerator cable
- Accelerator cable adjusting:

⇒ *Repair Manual, 2.8 Liter VR6 2V Engine Mechanical, Engine Code(s): AAA, Repair Group 20*

21 - Support (left rear)

- Between intake manifold upper section and cylinder head
- With engine ground connection

22 - Support

(right rear)

- Between intake manifold upper section and cylinder head

24-23

Safety precautions

To prevent injuries to persons and/or damage to the fuel injection and ignition systems, observe the following points:

- Do not touch or disconnect ignition wiring when the engine is running or being cranked at starting speeds.
- The ignition must be switched off before connecting or disconnecting fuel injection or ignition system wiring or tester cables.
- If the engine is to be turned at starter speed, without starting, e.g. when checking compression, disconnect the 5 pin harness connector from the ignition coil.

24-24

Rules of cleanliness

- When working on the fuel supply/injection system, carefully observe the following "5 rules":
- Thoroughly clean all connections and adjacent areas before disconnecting.
- Place parts that have been removed on a clean surface and cover. Do not use fluffy cloths!
- Carefully cover opened components or seal over if the repair cannot be carried out immediately.
- Only install clean components: Only unpack replacement parts immediately prior to installation. Do not use parts that have been stored loose (e.g. in tool boxes etc.).
- When the system is open: Do not work with compressed air if this can be avoided. Do not move vehicle unless absolutely necessary.

Technical data

Engine code	AAA
Idle speed, checking[1)] Idle speed RPM	 650...750
Motronic Engine Control Module (ECM): Replacement Part No. :	 see parts listing
Maximum engine speed RPM	6600

[1)] Observe test conditions ⇒ Page 24-26

24-26

Idle speed, checking

- *Idle speed and ignition timing are NOT adjustable.*
- *CO content specification is maintained via the Oxygen sensor control system. Malfunctions in the Oxygen sensor control system are detected via On Board Diagnostic and stored in Diagnostic Trouble Code (DTC) memory.*

- Engine oil temperature 80 °C (176 °F) minimum.
- All electrical consumers switched off (radiator fan must not run during the check).
- A/C switched off.
- Exhaust system must be free of leaks.
- No codes stored in DTC memory, ⇒ Page 01-5 (Fuel and Ignition).
- VAG 1551 Scan Tool connected.

- Start engine and let idle.
- Operate Scan Tool, taking into account the information on the display:
- Input 1 for "Rapid data transfer".
- Input 01 for address word "Engine electronics" and confirm with Q.

24-27

- Press → button.

- Select Function 04 "Initiate basic setting" and confirm with Q.

Initiate basic setting **HELP** ⮜

Input display group number XX

Display will appear as shown:

- Input 01 for display group 01 and confirm with Q.

System in basic setting 2 → ⮜

1 2 3 4

Display will appear as shown: (1...4 = Display zones)

Note:

In the "System in basic setting" function, the EVAP canister purge regulator valve 1 (N80) is closed.

Do not continue with check until the engine temperature exceeds 80 °C (176 °F) (display zone 2).

- Briefly increase engine speed (using accelerator pedal) and then let idle for 2 minutes.
- Read data for engine speed and ignition timing.

  Display zone 1 = Engine speed

  Specification: 650...750 RPM

  Display zone 4 = Ignition timing

  Specification: 6° before TDC fluctuating

24-28

- Press → button.

- Select Function 06 "End output" and confirm with Q.

If the engine speed specifications are not obtained:

- Check accelerator mechanism for ease of operation.

- Check and if necessary adjust closing damper ⇒ Page 24-46 .

24-29

Engine operation, checking

Note:

Check establishes whether Motronic Engine Control Module (J220J recognizes engine operating conditions.

- Connect VAG 1551 Scan Tool and select engine electronics (address word 01); selection is performed with engine idling ⇒ Page 01-3 .

Rapid data transfer **HELP**
Select function XX

Display will appear as shown:

- Select Function 08 "Read measuring value block" and confirm with Q.

Reading measuring value block **HELP**
Input display group number XX

Display will appear as shown:

- Input 04 for display group 04 and confirm with Q.

Read measuring value block 4 →
1 2 3 4

Display will appear as shown:

(1...4 = Display zones)

24-30

Note:

If something different is indicated on the display:

⇒ *Scan Tool operating instructions*

Closed Throttle Position:

Read measuring value block 4 →

...RPM ...% ...km/h 00010

- Observe 4th position from left in display zone 4.

  Specification: 1

Partially Open Throttle:

Read measuring value block 4 →

...RPM ...% ...km/h 00100

- Observe 3rd position from left in display zone 4, smoothly and partially open throttle.

  Specification: 1

Wide Open Throttle:

Read measuring value block 4 →

...RPM ...% ...km/h 01000

- Observe 2nd position from left in display zone 4 and fully open throttle (rev up).

  Specification: 1

Acceleration enrichment:

Read measuring value block 4 →

...RPM ...% ...km/h 10000

- Observe 1st position from left in display zone 4 and fully open throttle (rev up to above 3000 RPM).

  Specification: 1

Overrun:

- Increase engine speed to above 3000 RPM.
- Observe 5th position from left in display zone 4.

24-31

Read measuring value block 4 →

...RPM ...% ...km/h 00001

- Close throttle abruptly.

  Specification: Above 1900 RPM = 1

Note:

Below 1900 RPM idle will be displayed.

- Press → button.
- Select Function 06 "End output" and confirm with Q.

If the specifications are not obtained:

- Check and erase DTC memory, eliminate any malfunctions ⇒ page 01-5 (Fuel and Ignition).
- Check accelerator mechanism for ease of operation.
- Check and if necessary adjust closing damper ⇒ Page 24-46 .
- Check Throttle Position sensor ⇒ Page 24-32 .

24-32

Throttle Position sensor, checking

Note:

If the Throttle Position sensor (G69) has been removed, installed or replaced, the Transmission Control Module (J217) and the Throttle Position sensor must be matched to one another ⇒ *Page 24-34* .

- Connect VAG 1551 Scan Tool and select "engine electronics" (address word 01); with ignition switched on ⇒ page 01-3 (Fuel and Ignition).

Rapid data transfer **HELP**

Select function XX

Display will appear as shown:

- Select Function 08 "Read measuring value block" and confirm with Q.

Reading measuring value block **HELP**

Input display group number XX

- Display will appear as shown:
- Input 03 for display group 03 and confirm with Q.

Read measuring value block 3 →

1 2 3 4

Display will appear as shown:

(1...4 = Display zones)

Note:

If something different is indicated on the display:

⇒ *Scan Tool operating instructions*

24-33

- Check throttle angle (in closed throttle position), in display zone 3.

  Specification: 9...19 ∠°

- Slowly open throttle fully and observe angle displayed in display zone 3. The observed value must increase uniformly over the complete range.

- Observe throttle angle at Wide Open Throttle in display zone 3.

  Specification: 90...101 ∠°

- Press → button.

- Select Function 06 "End output" and confirm with Q.

If the specifications are not obtained or do not increase uniformly:

- Perform electrical check, test step Fig. 21 ⇒ page 01-42 (Fuel and Ignition), if necessary replace Throttle Position sensor (G69) ⇒ Page 24-18 , item 7 .

24-34

Transmission Control Module (TCM) and Throttle Position sensor, matching to one another

Note:

The TCM (J217) and Throttle Position sensor (G69) must be matched to one another after any of the following work has been completed:

- *Replacement of TCM.*
- *Removing and installing Throttle Position sensor*
- *Replacement of Throttle Body*

Matching

- Bring system to basic setting using VAG. 1551 Scan Tool, see Repair Group 01 (Fuel and Ignition).

24-35

Intake Air Temperature sensor, checking

- Remove Intake Air Temperature sensor (G72) and reconnect to harness connector.

- Seal threaded hole (vacated by sensor).

- Connect VAG 1551 Scan Tool and select "engine electronics" (address word 01); select while engine is idling ⇒ page 01-3 (Fuel and Ignition).

Rapid data transfer **HELP** ⮜

Select function XX

Display will appear as shown:

- Select Function 08 "Read measuring value block" and confirm with Q.

Reading measuring value block **HELP** ⮜

Input display group number XX

Display will appear as shown:

- Input 03 for display group 03 and confirm with Q.

Read measuring value block 3 → ⮜

1 2 3 4

Display will appear as shown:

(1...4 = Display zones)

Note:

If something different is indicated on the display:

⇒ *Scan Tool operating instructions*

- Read Intake Air Temperature in display zone 4.

  Specification: Approx. ambient temperature

- Spray sensor with commercially available freezing agent.

- Observe Engine Coolant Temperature value in display zone 4. The value must decrease uniformly and without interruption.

- Press → button.

- Select Function 06 "End output" and confirm with Q.

If the temperature value does not change:

- Perform electrical check, test step Fig. 25 ⇒ page 01-42 (Fuel and Ignition), if necessary replace Intake Air Temperature sensor (G72) ⇒ Page 24-15 , item 16 .

24-37

Engine Coolant Temperature (ECT) sensor, checking

- Engine cold

- Connect VAG 1551 Scan Tool and select "engine electronics" (address word 01); select while engine is idling ⇒ page 01-3 (Fuel and Ignition).

Rapid data transfer **HELP**
Select function XX

Display will appear as shown:

- Select Function 08 "Read measuring value block" and confirm with Q.

Reading measuring value block **HELP**
Input display group number XX

Display :

- Input 01 for display group 01 and confirm with Q.

24-38

Read measuring value block 1 →

1 2 3 4

Display will appear as shown: (1...4 = Display zones)

Note:

If something different is indicated on the display:

⇒ *Scan Tool operating instructions*

- Observe Engine Coolant Temperature value in display zone 2. The value must increase uniformly and without interruption.

Notes:

- *If the Scan Tool display jumps by 2...5 °C, this is caused by the Control Module and not by a faulty sensor.*
- *An open circuit is indicated by 78.4 °C.*
- *If irregular engine running occurs in certain temperature ranges and the display value does not increase without interruption, the temperature signal is temporarily interrupted and the sensor must be replaced.*

- Press → button.
- Select Function 06 "End output" and confirm with Q.

If the temperature value does not change:

- Perform electrical check, test step Fig. 18 ⇒ page 01-41 (Fuel and Ignition), if necessary replace Engine Coolant Temperature sensor (G62) (first release pressure from cooling system) ⇒ Page 24-8 , item 5 .

24-39

Fuel pressure regulator and residual pressure, checking

The fuel pressure regulator controls fuel pressure relative to Manifold Absolute Pressure .

- Fuel pump delivery rate OK, checking:

⇒ *Repair Manual, 2.8 Liter VR6 2V Engine Mechanical, Engine Code(s): AAA, Repair Group 20*

Note:

To prevent fuel spray when loosening connections, wrap a lint free cloth around the connection.

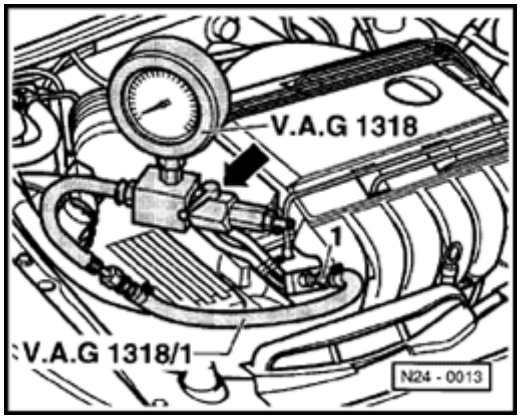

- Remove fuel rail plug -1- and connect pressure gauge VAG 1318 using adaptor VAG 1318/1. The shut-off lever on the pressure gauge must be closed (lever -arrow- at right angles to direction of flow).
- Start engine and let idle.
- Check fuel pressure.

  Specification: Approx. 3.5 bar

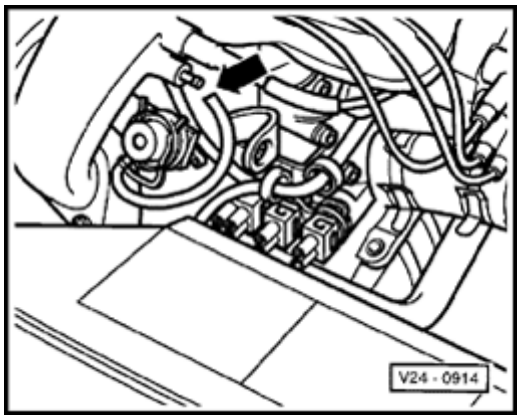

- Pull vacuum hose off fuel pressure regulator on intake manifold upper part -arrow-. The fuel pressure must increase to approx. 4.0 bar.
- Switch off ignition.
- Check for leaks and residual pressure by observing pressure drop on gauge. After 10 minutes there must be a residual pressure of at least 2.5 bar.

24-40

If the residual pressure drops below 2.5 bar:

- Start engine and let idle.

- After the pressure has built-up, switch off the ignition and at the same time clamp-off the return line (blue markings) on fuel rail.

- Observe pressure drop on gauge.

If pressure does not drop:

- replace fuel pressure regulator ⇒ Page 24-15 , item 14 .

If the pressure drops again:

- Check fuel pump check valve:

⇒ *Repair Manual, 2.8 Liter VR6 2V Engine Mechanical, Engine Code(s): AAA, Repair Group 20*

- Check hose connections, O-rings on fuel rail and fuel injectors for leaks.

- Check pressure gauge for leaks.

Note:

Before removing the pressure gauge, release the fuel pressure by opening the shut-off lever. While doing this hold a container over the connection.

24-41

Fuel injectors, removing and installing

Removing

- Disconnect spark plug connector using 3277.

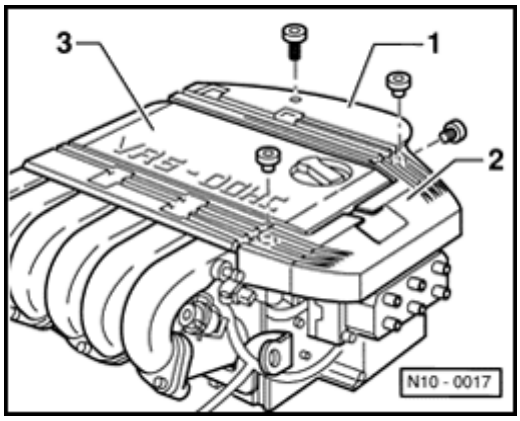

- Remove ignition wire guides -1- and -2-.
- Pull PCV breather valve off cylinder head cover and breather hose to EVAP canister purge regulator valve 1 off intake manifold upper section.
- Disconnect intake hose from Mass Air Flow sensor.
- Disconnect harness connectors from Throttle Position sensor, PCV heater element, Idle Air Control valve and Intake Air Temperature sensor.
- Disconnect accelerator cable at throttle body and support bracket (do not remove retainer).
- Pull coolant hoses from throttle body and seal off.
- Unclip fuel lines on cylinder head cover.
- Pull vacuum hose off fuel pressure regulator.
- Pull vacuum hose off brake servo.
- Remove intake manifold upper section.

24-42

- Remove wiring to fuel injectors from wiring guide.

- Remove wiring guide.

- Remove fuel injectors complete with fuel rail.

Note:

If the fuel injectors are seated too securely in the intake manifold lower section carefully pry out, using a 16 mm open end wrench under the Throttle body.

Installing

Installation is the reverse of the removal procedure.

Note:

When installing fuel injectors, ensure that O-rings are not/will not be damaged. To facilitate installation, moisten 0- rings lightly with oil.

- Adjusting throttle cable:

⇒ *Repair Manual, 2.8 Liter VR6 2V Engine Mechanical, Engine Code(s): AAA, Repair Group 20*

24-43

Fuel injectors, checking

- Remove intake manifold upper section ⇒ Pa 24-41 .

Resistance and voltage supply, checking

- Disconnect 2 pin harness connector from all injectors.

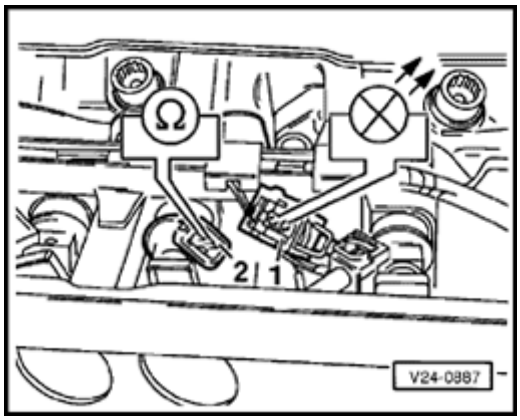

- Check resistance of each injector individuall terminal -2- using Fluke 83 multimeter and adaptor cables from VW 1594 adaptor kit. M be between 15...21.5 Ω.

If specifications not obtained:

- Replace faulty fuel injector ⇒ Page 24-41

If specifications are obtained:

- Disconnect 5 pin harness connector from ignition coil (N152).
- Check voltage supply for all injectors by connecting VAG 1527B voltage tester to plu using adaptor kit VW 1594.
- Operate starter.

  The LED must flicker

If the LED does not flicker:

- Switch off ignition.
- Reconnect harness connectors to all fuel injectors.
- Perform electrical check, test steps Fig. 11 through Fig. 16 ⇒ page 01-42 (Fuel and Ignition). If necessary replace Motronic Engine Control Module (J220) ⇒ Page 24-8 , item 2 .

Spray pattern and leaks, checking

- Disconnect ignition coil harness connector.
- Remove fuel rail complete with fuel injectors ⇒ Page 24-41 .
- Extend supply and return lines using extension hoses if necessary.
- Place injectors in VAG 1602 fuel analyzer.
- Reconnect harness connector to each fuel injector.

24-45

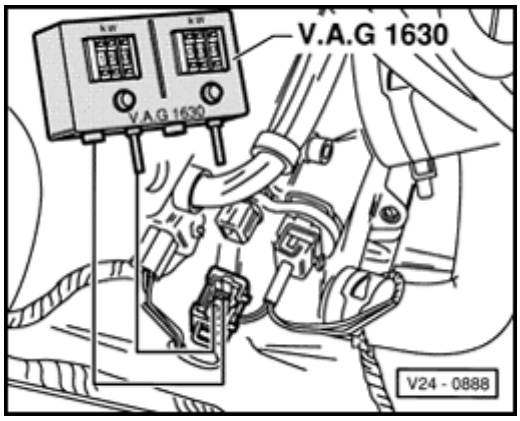

- Disconnect -blue- 2 pin harness connector fr Engine Coolant Temperature sensor (G62).

- Set digital potentiometer VAG 1630 -side A- 15 k Ω and using jumper wires from V\N 159 adaptor kit, connect to disconnected harness connector.
- Operate starter. The injectors must spray uniformly.
- Switch off ignition and check fuel injectors fo leaks. No more than 2 drops/minute may lea from each injector.

Note:

When installing the injectors ensure that the O- rings are not/will not be damaged. To facilitate installation, moisten O-rings slightly with oil.

- Check and erase DTC memory, eliminate ar stored codes if necessary ⇒ page 01-5 . The DTC code "Engine Coolant Temperature ser - G62" created by performing the check will b erased.

24-46

Throttle damper, checking and adjusting

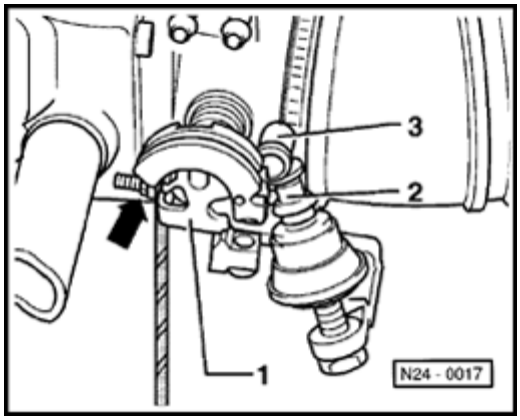

Checking

- Open throttle and close again, until the closing damper plunger -2- just touches the roller -3-.
- In this position check the gap between the limiting screw -arrow- and the throttle body lever -1- with a feeler gauge or drill.

  Specification: 2.5...3.5 mm

Adjusting

- Clamp a 3mm ∅ drill between limiting screw -arrow- and throttle body lever -1-.
- Adjust closing damper so that plunger -2- just touches roller -3-.
- Prevent closing damper from turning by locking down the lock nut.

Motronic Fuel Injection and Ignition system

Ignition system, servicing

Notes:

- *Only components that specifically relate to the ignition system are contained in this Repair Group. For other components of the fuel injection and ignition system ⇒ Repair Group 24.*
- *Electrical check of Motronic fuel injection and ignition system ⇒ Page 01-41 .*
- *The fuel injection and ignition system control module (J220) is equipped with On Board Diagnostic capability.*
- *Components marked with an * are checked via On Board Diagnostic.*
- *Before performing repairs and as an aid in troubleshooting, check Diagnostic Trouble Code (DTC) memory ⇒ Page 01-5 .*

Safety precautions ⇒ Page 28-5 .

Test data, spark plugs ⇒ Page 28-6 .

28-2

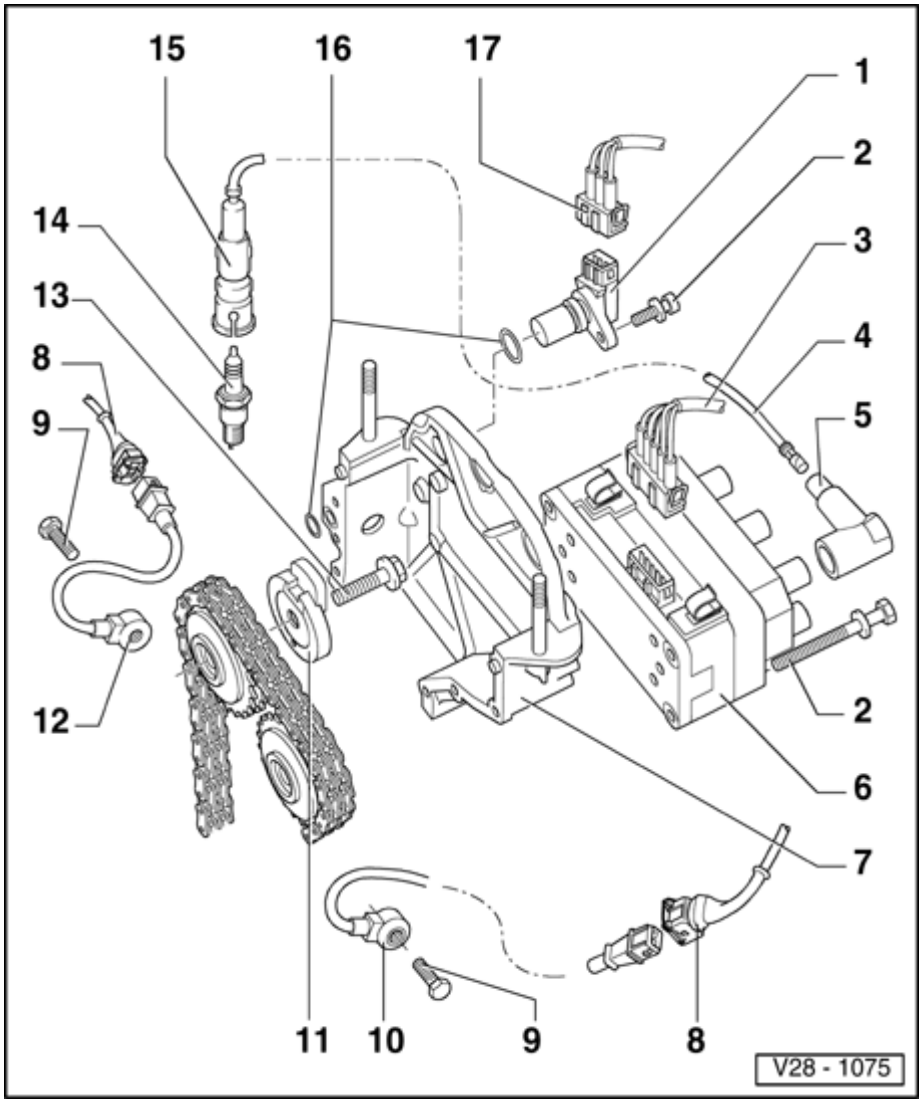

Note:

*Motronic Engine Control Module (ECM) (J220) * with connector ⇒ Page 24-8 , items 1 and 2 .*

1 - Camshaft Position sensor (G40)*

- Checking ⇒ Page 28-7
- Note spacers

2 - 10 Nm (7 ft lb)3

4 - Harness connector

- 5 pin
- For ignition coil (N152)

5 - High tension spark plug cable

- Check for continuity

6 - Suppressor

- 0.6...1.4 kΩ

7 - Ignition coil (N152)

*

- With ignition cable identification, do not interchange
  - Checking ⇒ Page 28-9

28-3

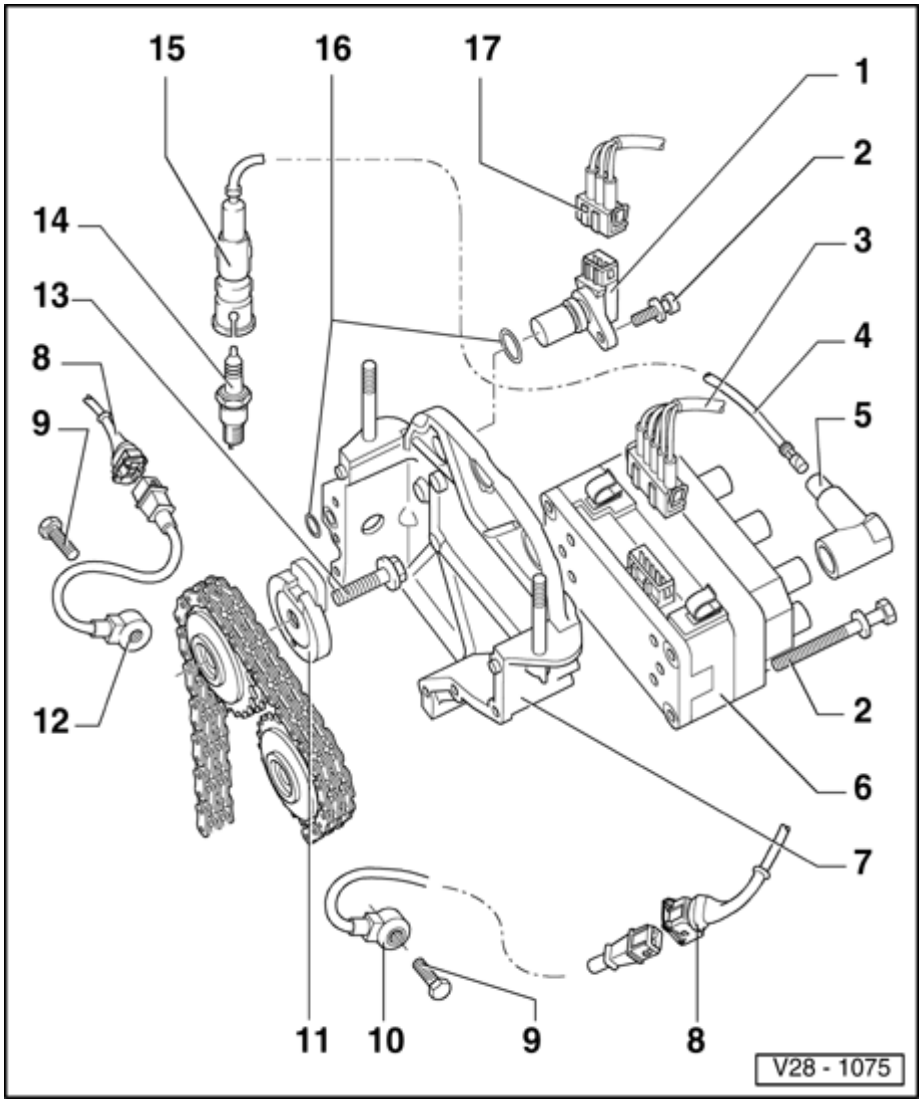

8 - Camshaft sprocket cover

- Removing and installing:

⇒ *Repair Manual, 2.8 Liter VR6 2V Engine Mechanical, Engine Code(s): AAA, Repair Group 15*

9 - Harness connector

- 3 pin

10 - 20 Nm (15 ft lb)

- Tightening torque influences the function of the knock sensor

11 - Knock sensor 2 (G66)*

- Location: engine block intake side

12 - Trigger wheel

- For Camshaft Position sensor (G40)

- Contact surface on camshaft sprocket must be dry
- If the trigger wheel has been removed, after re-installing, check timing

⇒ *Repair Manual, 2.8 Liter VR6 2V Engine Mechanical, Engine Code(s): AAA, Repair Group 13*

28-4

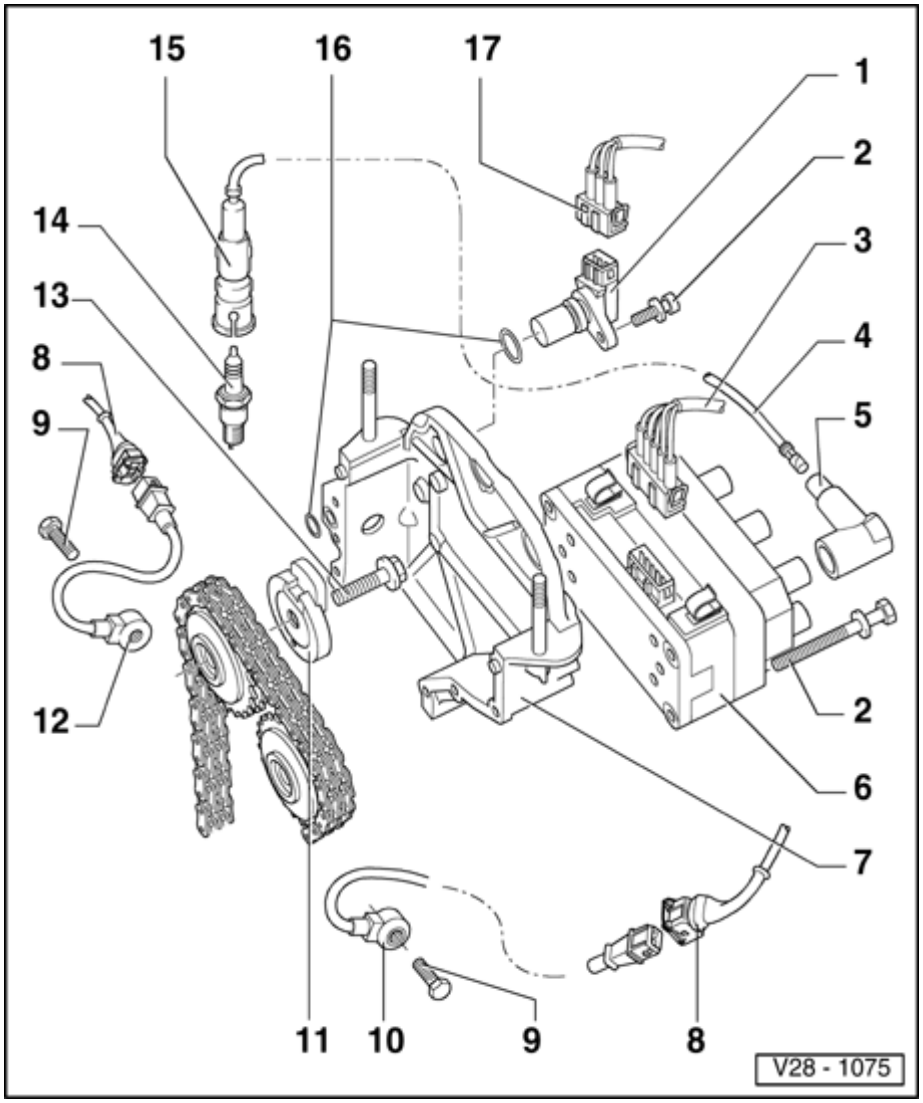

13 - Knock sensor 1 (G61)*

- Fitting location: Engine block exhaust side

14 - 100 Nm (74 ft lb)

- To remove or install, counter-hold with 24 mm open-end wrench on camshaft
- Oil contact surface of bolt head

15 - Spark plug

- 25 Nm (18 ft lb)
- Remove and install using 3122B
- Type and electrode gap ⇒ Page 28-6 .

16 - Spark plug connector

- Use 3277 when pulling off and pressing on
- 4000 to 6000 Ω

17 - O-ring

- Replace if damaged

18 - Harness connector

- 3 pin
- for Camshaft Position sensor (G40)

28-5

Safety precautions

To prevent injuries to persons and/or damage to the injection and ignition system, observe the following points:

- Do not touch or disconnect ignition wiring when the engine is running or being cranked by the starter.
- The ignition must be switched off when disconnecting or connecting fuel injection and ignition system wiring as well as test instrument cables.
- If the engine requires cranking without starting, e.g. when checking compression, disconnect 5 pin harness connector from ignition coil.

28-6

Technical data, spark plugs

Engine code	AAA
Ignition timing[1)]	
Checking	⇒ Page 24-26
Firing order	1-5-3-6-2-4
Spark plugs[2)]	
VW/Audi	101 000 035 AB
Manufacturer's designation	BKR 5 EKU
Electrode Gap	0.7 mm[3)]
Tightening torque	25 Nm (18 ft lb)

[1)] Not adjustable.

[2)] Use tool 3277 to pull off and press spark plug connectors on. Remove and install spark plugs with 3122B.

[3)] Gap between ground electrode and center electrode.

28-7

Camshaft Position sensor, checking

- Diagnostic Trouble Code (DTC) "Camshaft Position sensor -G40" recognized by On Board Diagnostic.

- Perform electrical check, test steps Fig. 2 an Fig. 22 ⇒ Page 01-41 .

Voltage supply, checking

- Disconnect 3 pin harness connector from Camshaft Position sensor (G40).

- Switch Fluke 83 multimeter to 20 Volt range

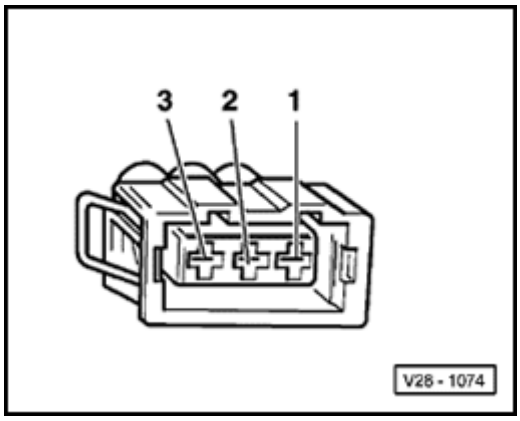

- Connect multimeter between terminals 1 anc of harness connector using jumper wires fro VW 1594 adaptor kit.
- Switch on ignition.

  Specification: Must be 10 Volts minimum
- Switch off ignition

If voltage is present:

- Replace Camshaft Position sensor (G40) ⇒ Page 28-1 , item 1 .

If no voltage is present:

- Replace Motronic Engine Control Module (E (J220) ⇒ Page 24-8 , item 2 .

28-8

Functional check

Remove fuse 18.

- Bridge harness connector and Camshaft Position sensor (G40) using adaptor cable V 1315A/4.

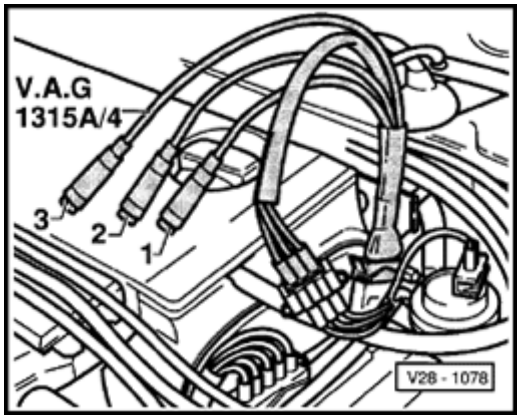

- Connect VAG 1527B voltage tester between connectors 2 and 3 using jumper wires from 1594 adaptor kit.
- Operate starter.

  LED must flicker

If necessary replace Camshaft Position sensor (G40) ⇒ Page 28-1 , item 1

28-9

Ignition coil, checking

- Diagnostic Trouble Code (DTC) "Ignition coil power output stage (1, 2 and 3)" recognized by On Board Diagnostic

- Camshaft Position sensor OK, checking ⇒ Page 28-7 .

- Perform electrical check, test steps Fig. 2 and Fig. 23 ⇒ Page 01-41 .

If the engine will NOT start, check the Voltage supply as follows

- Disconnect the 5 pin harness connector from the ignition coil (N152).

- Switch Fluke 83 multimeter to 20 Volt range

- Connect multimeter between terminals 1 and 5 of harness connector using jumper wires from VW 1594 adaptor kit.

- Switch on ignition.

  Specification: Must be 10 Volts minimum

- Switch off ignition

28-10

Activation, checking

- Remove fuse 18.

- Connect VAG 1527B voltage tester between the following terminals using jumper wires from VW1594 adaptor kit:

  5 and 2,

  5 and 3,

  5 and 4.

- Crank starter to check ignition signal from Motronic ECM.

  LED must flicker.

If LED does not flicker:

- Replace Motronic ECM (J220) ⇒ Page 24-8 , item 2 .

Volkswagen Passat

Official Factory Repair Manual

1996, 1997
Gasoline, Turbo Diesel, TDI
4-cylinder and VR6, including wagon

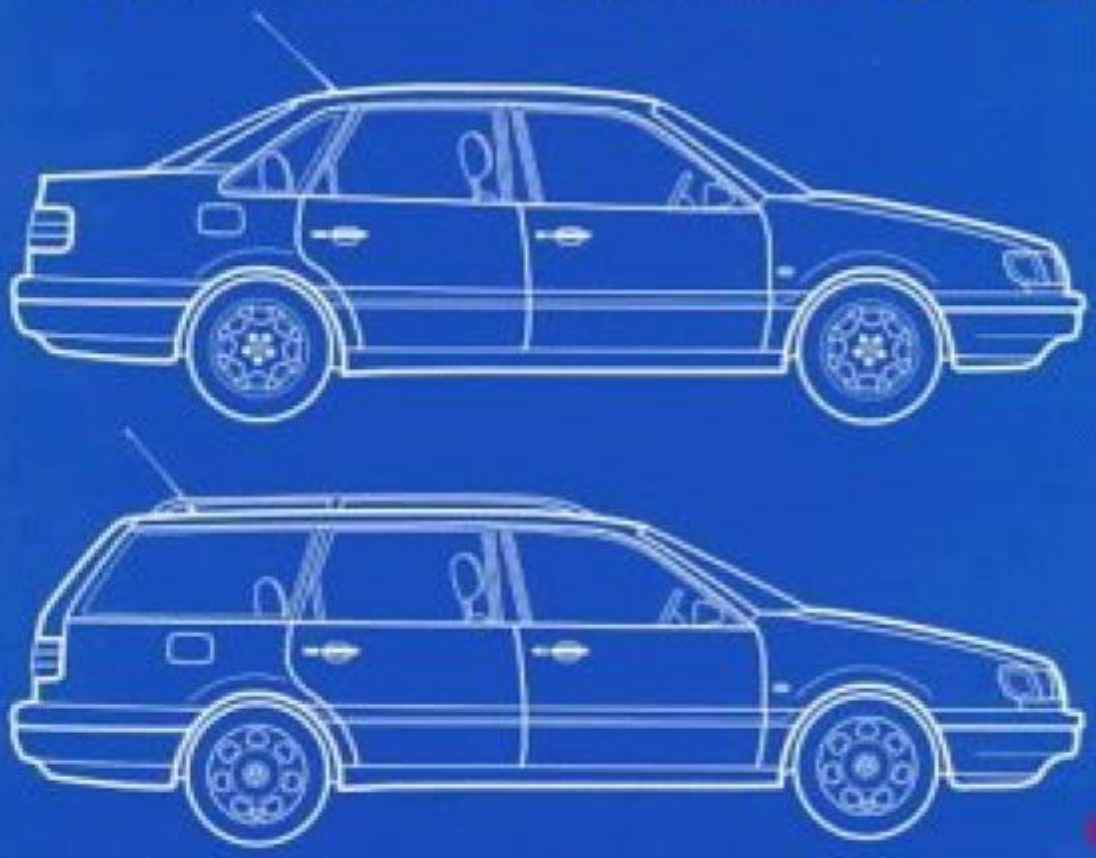

Robert Bentley

PASSAT '95 - '97

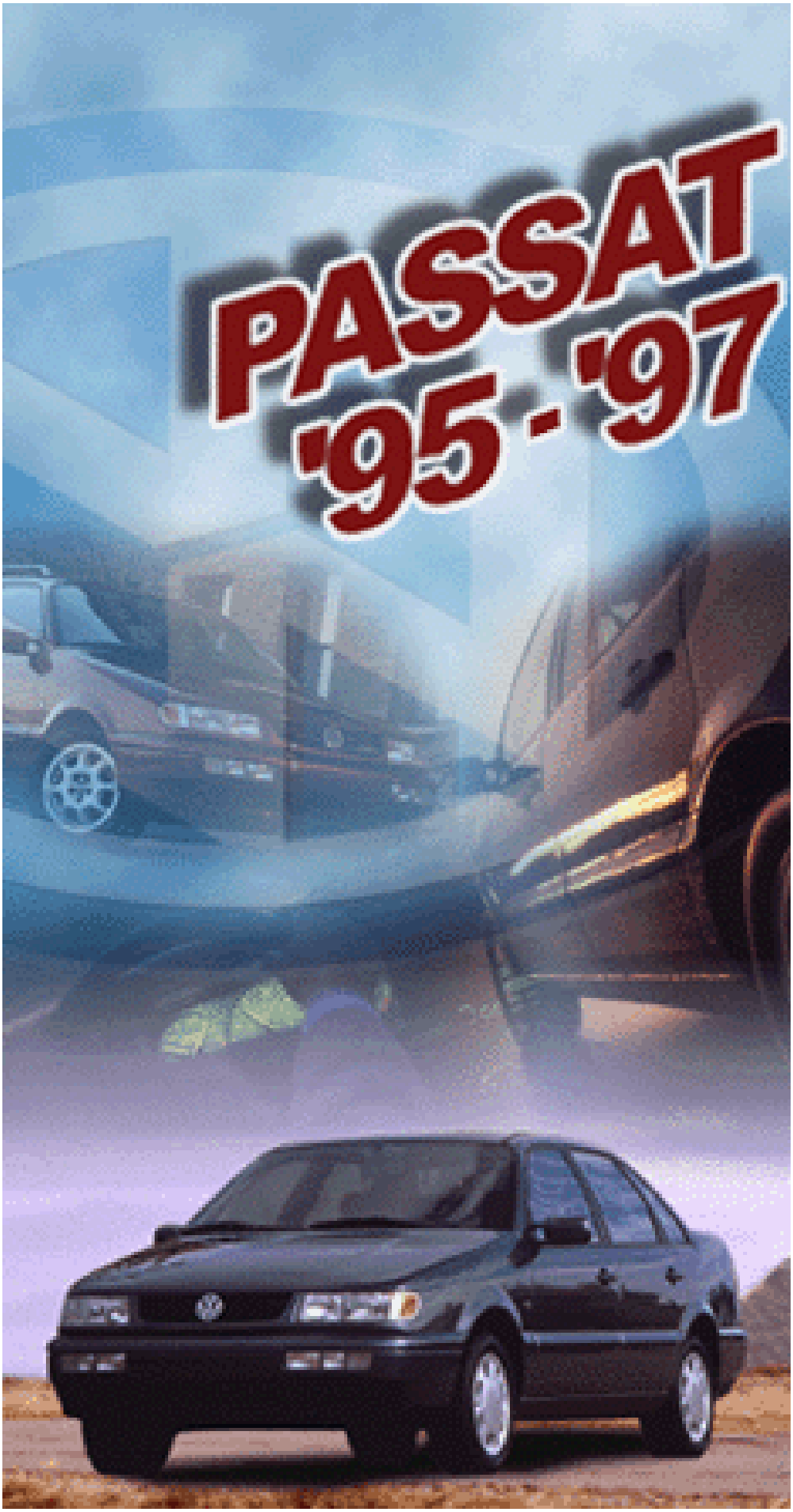

2.8 Liter VR6 2V Fuel Injection Ignition, Engine Code(s): AAA m.y. 1996-1997

01 - On Board Diagnostic (OBD)

On Board Diagnostic (OBD II)
Malfunction Indicator Lamp (MIL)
On Board Diagnostic (OBD II), technical data

VAG 1551 Scan Tool (ST), connecting and selecting Engine Electronics address word 01
Code Control Module (function 07)
Check DTC Memory (function 02)
Diagnostic Trouble Code (DTC) table
Erase DTC Memory (function 05)
Readiness code, reading (function 15)
Readiness code, creating
Output Diagnostic Test Mode (DTM) (function 03)
Read Measuring Value Block (function 08)
Display group overview

VAG 1551 Scan Tool (ST), connecting and selecting CARB/OBD II address word 33
Current data, mode 1
Freeze frame data, mode 2
DTC memory, mode 3
Clear DTC memory, mode 4
Oxygen sensor signal (B1-S1), mode 5

24 - Multiport Fuel Injection (MFI)

Multiport fuel injection and ignition system
Component locations, overview
General information
Engine Control Module (ECM), Heated Oxygen Sensor (HO2S), Engine Coolant Temperature (ECT) sensor and engine speed (RPM) sensor, removing and installing
Air cleaner (ACL), Mass Air Flow (MAF) sensor and Positive Crankcase Ventilation (PCV) heating element, removing and installing
Fuel rail and intake manifold, removing and installing
Throttle valve control module, removing and installing
Safety precautions
Rules for cleanliness
Technical data

Idle speed, checking
Heated Oxygen Sensor (HO2S) and Oxygen Sensor (O2S) control, checking (before three way catalytic converter)
Oxygen Sensor (O2S) heating, checking (before three way catalytic converter)
Heated Oxygen Sensor (HO2S) 2 and Oxygen Sensor (O2S) control, checking (after three way catalytic converter)
Oxygen Sensor (O2S) heating, checking (after three way catalytic converter)
Oxygen Sensor (O2S) aging, checking (before three way catalytic converter)
Engine operation, checking
Mass Air Flow (MAF) sensor, checking
Throttle valve control module, checking
Basic Setting (function 04)
Engine Coolant Temperature (ECT) sensor, checking
Intake Air Temperature (IAT) sensor, checking
Engine speed (RPM) sensor, checking
Speedometer Vehicle Speed Sensor (VSS) signal, checking
Engine Control Module (ECM) voltage supply, checking
Signal from automatic transmission, checking
Signal from A/C compressor, checking
Fuel injectors, checking
Fuel pressure regulator and residual pressure, checking
Intake air system (outside air), checking for leaks

28 - Ignition/Glow plug system

Multiport fuel injection and ignition system
Ignition system, components
Safety precautions
Technical data, spark plugs
Ignition timing, checking
Misfire recognition, checking
Ignition timing control, checking
Camshaft Position (CMP) sensor, checking
Knock Sensor (KS) and knock control, checking
Ignition coil, checking

On Board Diagnostic (OBD II)

Function

The Motronic Engine Control Module (ECM) -J220- for the fuel injection and ignition system is equipped with a Diagnostic Trouble Code (DTC) memory.

If malfunctions occur in the sensors and components being monitored, they will be stored in the DTC memory together with an indication of the type of malfunction.

The stored malfunctions are displayed after initiating the malfunction display ⇒ Page 01-12 .

After malfunctions have been eliminated, DTC memory must be erased (⇒ Page 01-29) and the repair must be verified via the appropriate display group ⇒ Page 01-33 , Readiness code, creating.

The readiness code must be created again after every time the DTC memory is erased and when the voltage supply to ECM -J220- is interrupted ⇒ Page 01-33 .

01-2

Malfunction Indicator Lamp (MIL)

If malfunctions are recognized and verified by the engine control module, they will be indicated by switching on the MIL.

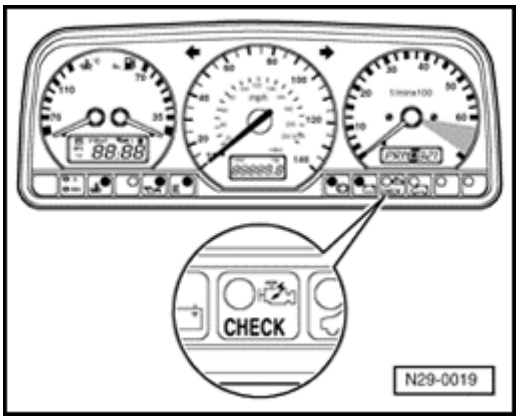

Location of Malfunction Indicator Lamp (MIL).

Note:

The MIL can be switched on in the flashing or permanently on mode. The Diagnostic Trouble Code (DTC) memory must be checked in every case ⇒ Page 01-12 .

- *Flashing: There is a malfunction that can damage the Three Way Catalytic Converter (TWC) if driven in this condition. In this case, the vehicle must not be driven using wide open throttle, but with partial throttle only, during which the MIL is continuously illuminated rather than flashing.*
- *Permanently on: There is a malfunction which will increase exhaust emissions. Check engine and/or automatic transmission control modules.*
- *If the MIL does not light up: If there is an engine running problem, or a customer complaint of one, perform a functional check of the MIL. Then DTC memory must be checked because malfunctions that do not switch on the MIL immediately can also be stored.*

01-3

Functional check:

- Switch ignition on.

  - The MIL must light-up.

If the MIL does not light with ignition switched on:

- Check wiring to MIL as follows:

Cause:	**Remedy:**
Malfunction Indicator Lamp (MIL) -K83- is not activated or does not light-up due to open circuit	- Switch ignition off - Connect VAG 1598/18 test box - Bridge test box sockets 1 and 5 - Switch ignition on • MIL must light-up If the MIL does not light-up: - Switch ignition off - Check MIL bulb If bulb is OK: - Locate and eliminate short or wiring open circuit from Engine Control Module (ECM) to MIL using wiring diagram
Malfunction cause: ▶	If no malfunction can be detected in the wiring to MIL: ECM -J220- faulty - Replace ECM, erase Diagnostic Trouble Code (DTC) memory.

01-4

If the MIL lights with ignition switched on, continue check as follows:

- Start engine and run at idle speed: MIL must go out after a few seconds.

If the MIL does not go out:

- Check DTC memory ⇒ Page 01-12 .

If no malfunction is stored:

Cause:	**Remedy:**
Malfunction Indicator Lamp (MIL) -K83- is permanently activated by short circuit to Ground (GND)	- Switch ignition off - Connect VAG 1598/18 test box - Check resistance between test box socket 5 and vehicle Ground (GND). Specification: ∞ ohms (Ω) If the specification is not attained: ♦ Short circuit to Ground (GND) in the activation wire from Engine Control Module (ECM) -J220- to MIL - Locate and eliminate this malfunction using wiring diagram
Malfunction cause: ▶	If the specification ∞ ohms (Ω) is attained and no short circuit to Ground (GND) can be found: ECM -J220- faulty - Replace ECM, erase Diagnostic Trouble Code (DTC) memory.

On Board Diagnostic (OBD II), technical data

Equipped with

- Diagnostic Trouble Code (DTC) memory
- Rapid data transfer

Engine control module identification

⇒ Page 01-7 , VAG 1551 Scan Tool (ST), connecting and selecting Engine Electronics address word 01

Engine Control Module (ECM) functions

Note:

The ECM is equipped with various functions. Some functions can be carried out with ignition switched on or with engine running. The following table details the prerequisites for selecting the individual functions.

Function performable with		Ignition switched on	Engine idling
02	Check DTC Memory	Yes	Yes
03	Output Diagnostic Test Mode	Yes	No
04	Basic Setting	Yes[1)]	Yes[2)3)]
05	Erase DTC Memory	Yes	Yes
06	End Output	Yes	Yes
07	Code Control Module	Yes	No
08	Read Measuring Value Block	Yes	Yes

[1)] Must be performed after the following work: replacement of Engine Control Module (ECM), throttle valve control module or engine

[2)] Only possible when coolant temperature is above 80 ° C (176 ° F). Prior to this, function 04 is blocked.

[3)] Must be performed when checking idle speed.

VAG 1551 Scan Tool (ST), connecting and selecting Engine Electronics address word 01

Special tools, testers and auxiliary items

- VAG 1551/1552 scan tool with VAG 1551/3 adapter cable

Note:

The vehicle system tester VAG 1552 can be used instead of the VAG 1551 scan tool, however a print-out is not possible.

Test conditions

- Fuse 21 OK
- Battery voltage at least 11 volts
- Ground (GND) connections on engine and transmission OK ⇒ Page 24-2 , item 7

Work sequence

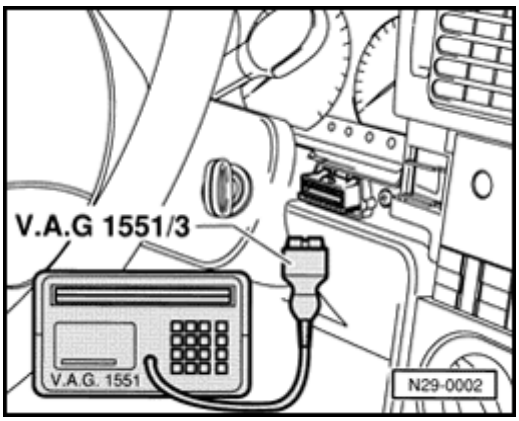

- Open cover for Data Link Connector (DLC).
- Connect VAG 1551/1552 scan tool with VAG 1551/3 adapter cable.

Depending on desired function:

- Switch ignition on or start engine ⇒ Page 01-6 , Engine Control Module (ECM) functions

01-8

Notes:

- *If the display does not show as indicated in the work sequence:*

⇒ VAG 1551 scan tool operating instructions

- *If due to an input malfunction Error in communications link is displayed, disconnect wire from VAG 1551/1552 scan tool, reconnect and repeat work step.*

- Operate VAG 1551/1552 scan tool taking into account information on the display.

- Press button -1- to select "Rapid data transfer" operating mode 1.

- Press buttons -0- and -1- to select "Engine Electronics" address word 01 and press -Q- button to confirm input.

021 906 259B MOTRONIC M5.9 AT V0 1 →
Coding 00001 **WSC xxxxx**

The VAG 1551 scan tool display will show the control module identification, e.g.:

- 021 906 259B = Part no. of the control module (for latest control module version ⇒ Parts catalog microfiche)
- MOTRONIC M5.9 = Fuel injection and ignition system
- Coding 00001 = Coding variants

Coding variants:

Coding	For following vehicles
00000	Passat VR6 with manual transmission
00001	Passat VR6 with automatic transmission

Note:

Correct engine control module number details and coding are displayed only with the engine running at idle speed.

If the coding differs from the vehicle version, then:

- Check engine control module coding ⇒ Page 01-10 .

- Press → button.

Rapid data transfer **HELP**

Select function

Indicated on display

- For additional steps see repair procedures.

Code Control Module (function 07)

If the appropriate code for the vehicle is not displayed or if the control module has been replaced, the control module must be coded as follows.

Special tools, testers and auxiliary items

- VAG 1551/1552 scan tool with VAG 1551/3 adapter cable

Work sequence

- Connect the VAG 1551/1552 scan tool and with ignition switched on select "Engine Electronics" address word 01 ⇒ Page 01-7 .

Rapid data transfer **Select function**	**HELP**	⮜	Indicated on display

- Press buttons -1- and -1- to select "Login-Procedure" function 11 and press -Q- button to confirm input.

Log-in Procedure **Input code number**	**HELP**	⮜	Indicated on display

- Press buttons -0-, -1-, -2-, -8- and -3- to input log-in code 01283 and press -Q- button to confirm input.

Rapid data transfer **Select function**	**HELP**	⮜	Indicated on display

- Press buttons -0- and -7- to select "Code Control Module" function 07 and press -Q- button to confirm input.

01-11

Code Control Module HELP
Input code number (0-32000)

Indicated on display

- Enter the appropriate code number for this vehicle and press -Q- button to confirm input.

Coding	For following vehicles
00000	Passat VR6 with manual transmission
00001	Passat VR6 with automatic transmission

021906259B MOTRONIC M5.9 AT V0 1 →
Coding 00001 WSC

The VAG 1551 scan tool display will show the control module identification, e.g.:

- Press → button.

Rapid data transfer HELP
Select function

Indicated on display

- Press buttons -0- and -6- to select "End Output" function 06 and press -Q- button to confirm input.

Note:

The code entered and shown on the display will not be used by the Engine Control Module (ECM) until the ignition has been switched off once. An incorrect coding leads to:

- *Engine running malfunctions*
- *Increased fuel consumption*
- *Increased emissions*
- *Malfunctions stored in Diagnostic Trouble Code (DTC) memory which are not actually present*
- *Reduced transmission life*

Check DTC Memory (function 02)

Special tools, testers and auxiliary items

- VAG 1551/1552 scan tool with VAG 1551/3 adapter cable

Work sequence

- Connect VAG 1551/1552 scan tool and select "Engine Electronics" address word 01 ⇒ Page 01-7 . When doing this the engine must be running at idle speed.

Note:

If engine does not start, operate starter for approx. 6 seconds and then do not switch ignition off.

- Switch printer on with PRINT button (warning lamp in button lights up).

Rapid data transfer **HELP** ⮜ Indicated on display

Select function

- Press buttons -0- and -2- to select "Check DTC Memory" function 02 and press -Q- button to confirm input.

DTC recognized ⮜ The number of malfunctions stored or "No DTC recognized" will be shown on the display.

Note:

If something different is indicated on the display:

⇒ VAG 1551 scan tool operating instructions

01-13

If one or more malfunctions are stored: the malfunctions stored will be displayed and printed out one after the other.

- Locate and eliminate malfunctions printed out as per Diagnostic Trouble Code (DTC) table ⇒ Page 01-14 .

Note:

If no malfunction is stored:

- Press → button.

Rapid data transfer **Select function**	**HELP**	Indicated on display

- Press buttons -0- and -6- to select "End Output" function 06 and press -Q- button to confirm input.
- Erasing DTC memory ⇒ Page 01-29 .

Note:

If a malfunction is present which is not recognized by On Board Diagnostic (OBD), perform further diagnosis using the troubleshooting table in:

⇒Electrical Wiring Diagrams, Troubleshooting & Component Locations

Diagnostic Trouble Code (DTC) table

Notes:

- *The DTC overview is listed according to SAE and VAG codes.*
- *After repairing malfunctions DTC memory must be erased (⇒ Page 01-29) and the repair verified via the appropriate display group ⇒ Page 01-33 , Readiness code, creating.*

Diagnostic Trouble Code (DTC)		Malfunction text	Malfunction elimination
SAE	VAG		
P0102	16486	Mass or Volume Air Flow Circuit Low Input	- Check Mass Air Flow (MAF) sensor ⇒ Page 24-62
P0103	16487	Mass or Volume Air Flow Circuit High Input	
P0112	16496	Intake Air Temperature Circuit Low Input	- Check intake air temperature sensor ⇒ Page 24-94
P0113	16497	Intake Air Temperature Circuit High Input	
P0116	16500	Engine Coolant Temp.Circ. Range/Performance	- Check Engine Coolant Temperature (ECT) sensor ⇒ Page 24-88
P0117	16501	Engine Coolant Temperature Circuit Low Input	
P0118	16502	Engine Coolant Temperature Circuit High Input	

Diagnostic Trouble Code (DTC)		Malfunction text	Malfunction elimination
SAE	VAG		
P0120	16504	Throttle Position Sensor A Circuit Malfunction	- Check throttle valve control module ⇒ Page 24-68 - Check MAF sensor ⇒ Page 24-62
P0121	16505	Throttle Position Sensor A Circuit Range/Performance Problem	
P0122	16506	Throttle Position Sensor A Circuit Low Input	
P0125	16509	Insufficient Coolant Temperature for Closed Loop Fuel Control	- Check ECT sensor ⇒ Page 24-88 - Check thermostat ⇒ *Repair Manual, 2.8 Liter VR6 2V Engine Mechanical, Engine Code(s): AAA, Repair Group 19*
P0131	16515	O_2 Sensor Circuit Low Voltage (Bank 1, Sensor 1)	- Check Heated Oxygen Sensor (HO2S) and Oxygen Sensor (O2S) control (before three way catalytic converter) ⇒ Page 24-25 - Check O2S aging and HO2S (before three way catalytic converter) ⇒ Page 24-56 - Check HO2S and O2S control (after three way catalytic converter) ⇒ Page 24-42
P0132	16516	O_2 Sensor Circuit High Voltage (Bank 1, Sensor 1)	
P0133	16517	O_2 Sensor Circuit Slow Response (Bank 1, Sensor 1)	
P0134	16518	O_2 Sensor Circuit No Activity Detected (Bank 1, Sensor 1)	

Diagnostic Trouble Code (DTC)		Malfunction text	Malfunction elimination
SAE	VAG		
P0135	16519	O_2 Sensor Heater Circuit Malfunction (Bank 1, Sensor 1)	- Check O2S heating (before three way catalytic converter) ⇒ Page 24-35
P0137	16521	O_2 Sensor Circuit Low Voltage (Bank 1, Sensor 2)	- Check HO2S and O2S control (after three way catalytic converter) ⇒ Page 24-42
P0138	16522	O_2 Sensor Circuit High Voltage (Bank 1, Sensor 2)	
P0140	16524	O_2 Sensor Circuit No Activity Detected (Bank 1, Sensor 2)	
P0141	16525	O_2 Sensor Heater Circuit Malfunction (Bank 1, Sensor 2)	- Check O2S heating (after three way catalytic converter) ⇒ Page 24-49

Diagnostic Trouble Code (DTC)		Malfunction text	Malfunction elimination
SAE	VAG		
P0171	16555	System too Lean (Bank 1)	- Check intake air system for leaks (outside air) ⇒ Page 24-123
			- Check HO2S and O2S control (before three way catalytic converter) ⇒ Page 24-25
			- Check Secondary Air Injection (AIR) system ⇒ Page 01-71 output Diagnostic Test Mode (DTM), and: ⇒ *Repair Manual, 2.8 Liter VR6 2V Engine Mechanical, Engine Code(s): AAA,Repair Group 26*
			- Check MAF sensor ⇒ Page 24-62
			- Check fuel pump: ⇒ *Repair Manual, 2.8 Liter VR6 2V Engine Mechanical, Engine Code(s): AAA, Repair Group 20*
			- Check fuel injectors ⇒ Page 01-71 output Diagnostic Test Mode (DTM), and ⇒ Page 24-115

01-18

Diagnostic Trouble Code (DTC)		Malfunction text	Malfunction elimination
SAE	VAG		
P0172	16556	System too Rich (Bank 1)	- Check HO2S and O2S control (before three way catalytic converter) ⇒ Page 24-25
			- Check fuel pressure regulator ⇒ Page 24-120
			- Check exhaust system for leaks: ⇒ *Repair Manual, 2.8 Liter VR6 2V Engine Mechanical, Engine Code(s): AAA, Repair Group 26*
P0300	16684	Random Misfire Detected	- Check components of ignition system ⇒ Page 28-1
			- Check misfire detection ⇒ Page 28-10
			- Check ignition coil ⇒ Page 28-27
			- Check engine speed (RPM) sensor ⇒ Page 24-99
			- Change type of fuel

Diagnostic Trouble Code (DTC)		Malfunction text	Malfunction elimination
SAE	VAG		
P0301	16685	Cylinder 1 Misfire Detected	- Check fuel injectors ⇒ Page 24-115 - Check ignition coil ⇒ Page 28-27 - Check misfire detection ⇒ Page 28-10
P0302	16686	Cylinder 2 Misfire Detected	
P0303	16687	Cylinder 3 Misfire Detected	
P0304	16688	Cylinder 4 Misfire Detected	
P0305	16689	Cylinder 5 Misfire Detected	
P0306	16690	Cylinder 6 Misfire Detected	
P0327[1)]	16711	Knock Sensor 1 Circuit Low Input (Bank 1)	- Check Knock Sensor (KS) and knock control ⇒ Page 28-19
P0332[1)]	16716	Knock Sensor 2 Circuit Low Input	- Check Knock Sensor (KS) and knock control ⇒ Page 28-19
P0341	16725	Camshaft Position Sensor Circuit Range/Performance	- Check Camshaft Position (CMP) sensor ⇒ Page 28-16
P0411	16795	Secondary Air Injection System Incorrect Flow Detected	- Check Secondary Air Injection (AIR) system: ⇒ *Repair Manual, 2.8 Liter VR6 2V Engine Mechanical, Engine Code(s): AAA, Repair Group 26*
[1)] Vehicle m.y. 97 ➤ the SAE diagnostic trouble code is not displayed.			

Diagnostic Trouble Code (DTC)		Malfunction text	Malfunction elimination
SAE	VAG		
P0422	16806	Main Catalyst Efficiency Below Threshold (Bank 1)	- Check HO2S and O2S control (before three way catalytic converter) ⇒ Page 24-25
P0440	16824	Evaporative Emission Control System Malfunction	- Check EVAP canister purge regulator valve ⇒ Page 01-71 , output Diagnostic Test Mode (DTM)
P0501	16885	Vehicle Speed Sensor Range/Performance	- Check Vehicle Speed Sensor (VSS) signal ⇒ Page 24-101
P0506	16890	Idle Control System RPM Lower than Expected	- Check fuel pressure regulator and holding pressure ⇒ Page 24-120 - Check ignition timing ⇒ Page 28-8 - Check Vehicle Speed Sensor (VSS) signal ⇒ Page 24-101 - Check battery voltage - Check idle speed ⇒ Page 24-22 - Check throttle valve control module ⇒ Page 24-68
P0507	16891	Idle Control System RPM Higher than Expected	
P0510	16894	Closed Throttle Position Switch Malfunction	
P0605	16989	Internal Control Module Read Only Memory (ROM) Error	- Replace Engine Control Module (ECM) ⇒ Page 24-1 , item 5

01-21

Diagnostic Trouble Code (DTC)		Malfunction text	Malfunction elimination
SAE	VAG		
P0722	17106	Output Speed Sensor Circ. No Signal	- Switch ignition off. - Connect VAG 1598/18 test box. - Measure resistance between test box sockets 20 and 65. • Specification: min. 0.8 KΩ; max. 0.9 KΩ If the specification is not attained: - Use wiring diagram to locate and repair short circuit to Ground. - Replace vehicle speed sensor. - After repairing malfunction, clear DTC memory.

Diagnostic Trouble Code (DTC)		Malfunction text	Malfunction elimination
SAE	VAG		
P1127	17535	Long Term Fuel Trim mul. System too Rich (Bank 1)	- Check MAF sensor ⇒ Page 24-62
			- Check HO2S and O2S control (before three way catalytic converter) ⇒ Page 24-25
			- Check HO2S and O2S control (after three way catalytic converter) ⇒ Page 24-42
			- Check fuel pump: ⇒ *Repair Manual, 2.8 Liter VR6 2V Engine Mechanical, Engine Code(s): AAA, Repair Group 20*
			- Check Secondary Air Injection (AIR) system ⇒ Page 01-71 output Diagnostic Test Mode (DTM), and: ⇒ *Repair Manual, 2.8 Liter VR6 2V Engine Mechanical, Engine Code(s): AAA, Repair Group 26*
			- Check fuel injectors ⇒ Page 01-71 output Diagnostic Test Mode, and (DTM) ⇒ Page 24-115

Diagnostic Trouble Code (DTC)		Malfunction text	Malfunction elimination
SAE	VAG		
P1128	17536	Long Term Fuel Trim mul. System too Lean (Bank 1)	- Check HO2S and O2S control (before three way catalytic converter) ⇒ Page 24-25
			- Check HO2S and O2S control (after three way catalytic converter) ⇒ Page 24-42
			- Check fuel pump: ⇒ *Repair Manual, 2.8 Liter VR6 2V Engine Mechanical, Engine Code(s): AAA, Repair Group 20*
			- Check fuel injectors ⇒ Page 01-71 output Diagnostic Test Mode (DTM), and ⇒ Page 24-115
			- Check EVAP canister purge regulator valve ⇒ Page 01-71 output Diagnostic Test Mode (DTM)
P1213	17621	Cyl. 1-Fuel Injector Circ. Short to B+	- Check fuel injectors ⇒ Page 01-71 output Diagnostic Test Mode (DTM), and ⇒ Page 24-115
P1214	17622	Cyl. 2-Fuel Injector Circ. Short to B+	
P1215	17623	Cyl. 3-Fuel Injector Circ. Short to B+	
P1216	17624	Cyl. 4-Fuel Injector Circ. Short to B+	
P1217	17625	Cyl. 5-Fuel Injector Circ. Short to B+	
P1218	17626	Cyl. 6-Fuel Injector Circ. Short to B+	

Diagnostic Trouble Code (DTC)		Malfunction text	Malfunction elimination
SAE	VAG		
P1225	17633	Cyl.1-Injector Circ. Short to Ground	- Check fuel injectors ⇒ Page 01-71 output Diagnostic Test Mode (DTM), and ⇒ Page 24-115
P1226	17634	Cyl.2-Injector Circ. Short to Ground	
P1227	17635	Cyl.3-Injector Circ. Short to Ground	
P1228	17636	Cyl.4-Injector Circ. Short to Ground	
P1229	17637	Cyl.5-Injector Circ. Short to Ground	
P1230	17638	Cyl.6-Injector Circ. Short to Ground	
P1237	17645	Cyl.1-Injector Circ. Open Circuit	
P1238	17646	Cyl.2-Injector Circ. Open Circuit	
P1239	17647	Cyl.3-Injector Circ. Open Circuit	
P1240	17648	Cyl.4-Injector Circ. Open Circuit	
P1241	17649	Cyl.5-Injector Circ. Open Circuit	
P1242	17650	Cyl.6-Injector Circ. Open Circuit	

Diagnostic Trouble Code (DTC)		Malfunction text	Malfunction elimination
SAE	VAG		
P1340	17748	Camshaft/Crankshaft Pos.Sens.Signals Out of Sequence	- Check engine speed (RPM) sensor ⇒ Page 24-99
P1410	17818	Tank Ventilation Valve Short to B+	- Check EVAP canister purge regulator valve ⇒ Page 01-71 output Diagnostic Test Mode (DTM)
P1420	17828	Sec.Air Inj.Control Module Electrical Malfunction	- Check Secondary Air Injection (AIR) system ⇒ Page 01-71 output Diagnostic Test Mode (DTM), and: ⇒ *Repair Manual, 2.8 Liter VR6 2V Engine Mechanical, Engine Code(s): AAA, Repair Group 26*
P1421	17829	Sec.Air Inj.Valve Circ. Short to Ground	
P1422	17830	Sec.Air Inj.Sys.Control Valve Circ. Short to B+	
P1425	17833	Tank Vent. Valve Short to Ground	- Check EVAP canister purge regulator valve ⇒ Page 01-71 , output Diagnostic Test Mode (DTM)
P1426	17834	Tank Vent. Valve Open Circuit	

Diagnostic Trouble Code (DTC)		Malfunction text	Malfunction elimination
SAE	VAG		
P1450	17858	Sec.Air Inj.Sys.Circ. Short to B+	- Check Secondary Air Injection (AIR) pump relay - J299- ⇒Electrical Wiring Diagrams, Troubleshooting Component Locations
P1451	17859	Sec.Air Inj.Sys.Circ. Short to Ground	
P1452	17860	Sec.Air Inj.Sys. Open Circuit	
P1500	17908	Fuel Pump Relay Circ. Electrical Malfunction	- Check fuel pump relay⇒Electrical Wiring Diagrams, Troubleshooting Component Locations
P1502	17910	Fuel Pump Relay Circ. Short to B+	- Check fuel pump: ⇒ *Repair Manual, 2.8 Liter VR6 2V Engine Mechanical, Engine Code(s): AAA, Repair Group 20*

01-27

Diagnostic Trouble Code (DTC)		Malfunction text	Malfunction elimination
SAE	VAG		
P1543	17951	Throttle Actuation Potentiometer Signal too Low	- Check throttle valve control module ⇒ Page 24-68
P1544	17952	Throttle Actuation Potentiometer Signal too High	
P1580	17988	Throttle Actuator (B1) Malfunction	
P1582	17990	Idle Adaption at Limit	- Check throttle valve control module ⇒ Page 24-68
			- Check intake air system for leaks (outside air) ⇒ Page 24-123
			- Check exhaust system for leaks: ⇒ *Repair Manual, 2.8 Liter VR6 2V Engine Mechanical, Engine Code(s): AAA, Repair Group 26*
			- Check fuel pressure regulator ⇒ Page 24-120

Diagnostic Trouble Code (DTC)		Malfunction text	Malfunction elimination
SAE	VAG		
P1611	18019	MIL Call-up Circ./Transm.Control Module Short to Ground	- Check wiring between Transmission Control Module (TCM) and Engine Control Module (ECM): ⇒*Electrical Wiring Diagrams, Troubleshooting & Component Locations*
P1613	18021	MIL Call-up Circ.Open Short to B+	- Check MIL LED: ⇒*Electrical Wiring Diagrams, Troubleshooting & Component Locations* - Heavy wear on ignition/starter switch (D) contacts, replace

Erase DTC Memory (function 05)

Special tools, testers and auxiliary items

- VAG 1551/1552 scan tool with VAG 1551/3 adapter cable

Test conditions

- Malfunctions eliminated
- Engine coolant temperature must reach at least 80 °C (176 °F)

Note:

If DTC memory is erased, the repair must be verified via the appropriate display group ⇒ *Page 01-33* .

Work sequence

- Connect VAG 1551/1552 scan tool and select "Engine Electronics" address word 01 ⇒ Page 01-7 . When doing this engine must be running at idle speed.

Rapid data transfer **HELP**
Select function

Indicated on display

- Press buttons -0- and -2- to select "Check DTC Memory" function 02 and press -Q- button to confirm input.

Rapid data transfer **HELP**
Select function

- Press → button until all malfunctions still stored have appeared and the display reads:
- Press buttons -0- and -5- to select "Erase DTC Memory" function 05 and press -Q- button to confirm input. Repair malfunction if necessary.

01-30

Rapid data transfer **DTC Memory is erased**	→	⮜	Indicated on display - Press → button.
Rapid data transfer **Select function**	**HELP**	⮜	Indicated on display - Allow the engine to idle for at least 1 minute and check DTC memory again.

If no malfunction is displayed:

- Press buttons -0- and -6- to select "End Output" function 06 and press -Q- button to confirm input.
- Road test the vehicle for at least 10 minutes.

Road test procedure

- Engine coolant temperature must reach at least 80 ° C (176 ° F)
- Briefly depress accelerator pedal to wide open throttle when engine speed is above 4600 RPM.
- Check DTC memory again, no malfunctions should be shown.
- Create readiness code ⇒ Page 01-33 .

Note:

If the same malfunction is stored in DTC memory after the test drive, check control module coding ⇒ *Page 01-10* .

Readiness code, reading (function 15)

Special tools, testers and auxiliary items

- VAG 1551/1552 scan tool with VAG 1551/3 adapter cable

Work sequence

- Connect the VAG 1551/1552 scan tool and with ignition switched on select "Engine Electronics" address word 01 ⇒ Page 01-7 .

Rapid data transfer **HELP**
Select function

Indicated on display

- Press buttons -1- and -5- to select "Readiness Code" function 15 and press -Q- button to confirm input.

- Must appear on display when all diagnosis functions have been successfully completed:

Readiness code
00000000 - Test complete

Indicated on display

- Press → button.
- Press buttons -0- and -6- to select "End Output" function 06 and press -Q- button to confirm input.

Readiness code
01101011 - Test not complete

Indicated on display (possible example)

01-32

One or more diagnostic checks have not been completed successfully:

- Press → button.
- Create readiness code ⇒ Page 01-33 .
- Read the readiness code ⇒ Page 01-31 . If DTC memory has been erased, the repair must be verified via the appropriate display group ⇒ Page 01-33 , Readiness code, creating.

Relevance of 8-digit number block for readiness code

The readiness code is created only when all display fields show 0								
1	2	3	4	5	6	7	8	Diagnostic function
							0	Three way catalytic converter
						0		Three way catalytic converter heating (not available)
					0			Fuel tank venting system
				0				Secondary air injection system
			0					Air conditioner (no diagnostic capability)
		0						Heated oxygen sensor
	0							Oxygen sensor heating
0								Exhaust gas recirculation system (not available)

Readiness code, creating

Notes:

- *During test sequence the ignition must not be switched off.*
- *If the specifications are obtained before the time specified in the table, you can proceed to the next work step.*
- *On vehicles ➢ m.y. 96 the function bits in the readiness code are set to 0 together, when the last diagnosis has been successfully completed.*
- *On vehicles m.y. 97 ➢ the function bits in the readiness code are set to 0 individually, for each successfully completed diagnosis.*

Special tools, testers and auxiliary items

- VAG 1551/1552 scan tool with VAG 1551/3 adapter cable

Test sequence

WARNING!

When driving or riding in an airbag-equipped vehicle:

- ***Never hold test equipment in your hands or lap while the vehicle is in motion. Objects between you and the airbag can increase the risk of injury in an accident.***
- ***Secure tools or test equipment on passenger side floor where it can be safely read by the second technician.***

Work step: 1

- Connect VAG 1551/1552 scan tool and select "Engine Electronics" address word 01 ⇒ Page 01-7 .

  When doing this, the ignition must be switched on.

Relevance of 8-digit number block in display field 4

1	2	3	4	5	6	7	8	Diagnostic status
							1	Diagnostic Trouble Code (DTC) memory 1 = Malfunction in system; 0 = No DTCs recognized
						1		ERROR bit (specific to display group being viewed) 1 = Malfunction detected; 0 = No malfunction detected
					1			CYCLE bit 1 = Diagnosis complete; 0 = Diagnosis not performed yet
				1				ACTIVE bit 1 = Diagnosis active; 0 = Diagnosis inactive
			x					Function bit [1)]
		x						Function bit [1)]
	x							Function bit [1)]
x								Function bit [1)]

[1)] The relevance of the function bit varies depending upon the work step.

Notes:

- *There must not be a malfunction stored in DTC memory and there must be no malfunction detected during the diagnosis.*
- *If the C CLE bit has a 1, the diagnosis is completed and the test sequence can be implemented.*
- *The specifications for the function bits must only be satisfied during the diagnostic phase (ACTIVE bit 1).*
- *An x shown as the specification in the diagnosis status table means the display can show either 0 or 1 .*

Work step: 2

Rapid data transfer **Select function**	**HELP**	<	Indicated on display - Press buttons -0- and -2- to select "Check DTC Memory" function 02 and press -Q- button to confirm input.
DTC recognized	→	<	The number of malfunctions stored or "No DTC recognized" will be shown on the display. - Locate and eliminate malfunctions printed out as per DTC table ⇒ Page 01-14 . - Press → button.

01-36

Work step: 3

Rapid data transfer **Select function**	**HELP**	⮜	Indicated on display - Press buttons -0- and -5- to select "Erase DTC Memory" function 05 and press -Q- button to confirm input.
Rapid data transfer **DTC Memory is erased**	→	⮜	Indicated on display - Press → button.

Work step: 4

- Start engine and run at idle speed.

Work step: 5

Rapid data transfer **Select function**	**HELP**	⮜	Indicated on display - Press buttons -0- and -8- to select "Read Measuring Value Block" function 08 and press -Q- button to confirm input.
Read Measuring Value Block **Input display group number**	**HELP**	⮜	Indicated on display - Press buttons -1-, -0- and -3- to input display group 103 and press -Q- button to confirm input.
Read Measuring Value Block **1 2 3 4**	**103** →	⮜	Indicated on display (1-4 = display fields) - Increase engine speed to 3000-3500 RPM and check specifications after 60 seconds.

01-37

	Display fields			
	1	2	3	4
Display group 103				
Display	xx.xx ms	**xxx.x ° C**	**xxx.x ° C**	**xxxx xxxx**
Indicated	Engine load	**Engine coolant temperature**	**Three way catalytic converter temperature**	**Diagnosis conditions**
Specification	---	**At least 60 ° C**	**At least 360 ° C**	**xx1x xx00**
Working range	1.4...2.4 ms	-46.5...141.0 ° C	0.0...999.9 ° C	x = Not relevant

Relevance of 8 digit number block in display field 4								
1	2	3	4	5	6	7	8	Specifications of diagnosis conditions
		1						Oxygen Sensor (O2S) control active
						0		Diagnosis malfunction free
							0	DTC memory malfunction free

- Press → key.

01-38

Work step: 6

Diagnosis: Secondary Air Injection (AIR) system

Test conditions

- Vehicle stationary, engine at idle

- Press buttons -0- and -4- to select "Basic Setting" function 04 and press -Q- button to confirm input.

Basic Setting **HELP** ⮜ Indicated on display

Input display group number

- Press buttons -1-, -6- and -0- to input display group 160 and press -Q- button to confirm input.

System in Basic Setting 160 → ⮜ Indicated on display (1-4 = display fields)

1 2 3 4

- Start engine and run at idle speed and check specifications after 20 seconds.

01-39

	Display fields			
	1	2	3	4
Display group160				
Display	**xxx.x ° C**	**xx.x**	**xx.x**	xxxx xxxx
Indicated	**Engine coolant temperature**	**Secondary air injection valve open**	**Secondary air injection pump running**	Diagnosis conditions
Specification	**At least 60 ° C**	**At least 0.7**	**At least 25**	xx11 x100
		Secondary air injection valve causes deviations in Oxygen Sensor (O2S) control	Secondary air injection valve causes deviations in O2S control	x = Not relevant
Working range	-46.5...141.0 ° C			

Relevance of 8 digit number block in display field 4								
1	2	3	4	5	6	7	8	Specifications of diagnosis conditions
		1						Engine running at idling speed
			1					Vehicle stationary
					1			CYCLE Bit = Diagnosis completed
						0		Diagnosis malfunction free
							0	DTC memory malfunction free

- Press C key.

01-40

Work step: 7

Rapid data transfer **Select function**	**HELP**	⮜	Indicated on display - Press buttons -0- and -4- to select "Basic Setting" function 04 and press -Q- button to confirm input.
Basic Setting **Input display group number**	**HELP**	⮜	Indicated on display - Press buttons -1-, -0- and -3- to input display group 103 and press -Q- button to confirm input.
System in Basic Setting 103 **1 2 3 4**	→	⮜	Indicated on display (1-4 = display fields) - Increase engine speed to 2200-3300 RPM and check specifications after 120 seconds.

01-41

	Display fields			
	1	2	3	4
Display group 103				
Display	xx.xx ms	**xxx.x ° C**	**xxx.x ° C**	**xxxx xxxx**
Indicated	Engine load	**Engine coolant temperature**	**Three way catalytic converter temperature**	**Diagnosis conditions**
Specification		**At least 60 ° C**	**At least 360 ° C**	**xx1x xx00**
	---		---	x = Not relevant
Working range	1.4...2.4 ms	-46.5...141.0 ° C	0.0...999.9 ° C	

Relevance of 8 digit number block in display field 4								
1	2	3	4	5	6	7	8	Specifications of diagnosis conditions
		1						Oxygen sensor control active
						0		Diagnosis malfunction free
							0	DTC memory malfunction free

- Press C key.

01-42

Work step: 8

Diagnosis: Oxygen Sensor (O2S) aging (regulating frequency extended)

Basic Setting **HELP**

Input display group number

Indicated on display

- Press buttons -1-, -3- and -1- to input display group 131 and press -Q- button to confirm input.

System in Basic Setting **131** →

1 2 3 4

Indicated on display (1-4 = display fields)

- Run engine at idle speed for at least 30 seconds and check the specifications.

01-43

	Display fields			
	1	2	3	4
Display group 131				
Display	**xxxx rpm**	**x.xxx V**	**xxxx ms**	**xxxx xxxx**
Indicated	**Engine speed**	**Voltage of HO2S after three way catalytic converter**	**HO2S aging**	**Diagnosis conditions**
Specification	**650...750 rpm**	0.01...1.00 V fluctuating	**-1200...1200 ms**	**xx11 x100**
	---		HO2S aging: TV displacement by O2S control after three way catalytic converter	x = Not relevant
Working range	650...5500 rpm	0.01...1.00 V	-1200...1200 ms	

Relevance of 8 digit number block in display field 4								
1	2	3	4	5	6	7	8	Specifications of diagnosis conditions
		1						O2S control after TWC active
			1					O2S control before TWC active
					1			CYCLE Bit = Diagnosis completed
						0		Diagnosis malfunction free
							0	DTC memory malfunction free

- Press -C- button.

Work step: 9

Diagnosis: Oxygen Sensor (O2S) adaptation in partial load range

Basic Setting **HELP**

Input display group number

Indicated on display

- Press buttons -1-, -2- and -5- to input display group 125 and press -Q- button to confirm input.

System in Basic Setting **125** →

1 2 3 4

Indicated on display: (1-4 = display fields)

Note:

Avoid deceleration fuel cut-off during this diagnosis, as this causes the three way catalytic converter to store oxygen, and diagnosis will be blocked for at least 10 seconds.

- Test drive with the following special requirements:
  - Engine must be kept between 2500-4000 RPM
  - Automatic transmission: Drive range 2
  - Manual transmission: 2rd gear
- Continue test drive until the specifications are attained.
- Check the specifications during the test drive (second technician necessary). See airbag warning ⇒ Page 01-33 .

01-45

	Display fields			
	1	2	3	4
Display group 125				
Display	**xxxx rpm**	**x.x**	x.x %	**xxxx xxxx**
Indicated	**Engine speed**	**O2S adaptation at partial load**	**O2S adaptation at idle**	**Diagnosis conditions**
Specification	**2500...3500 rpm**	**-10...10**	-12.4...12.4 %	**01x1 x100**
	Depending upon driving condition			x = Not relevant
Working range	650...5500 rpm	**-25...25**	-12.4...12.4 %	

Relevance of 8 digit number block in display field 4								
1	2	3	4	5	6	7	8	Specifications of diagnosis conditions
0								Reduced correction range active
	1							Part load adaptation active
			1					O2S control active, before TWC
					1			CYCLE Bit = Diagnosis completed
						0		Diagnosis malfunction free
							0	DTC memory malfunction free

- Press -C- button.

01-46

Work step: 10

Diagnosis: Oxygen Sensor (O2S) adaptation in idle range

Test conditions

- Engine coolant temperature min. 60 °C (140 °F) (⇒display group 001, display field 2)
- Intake air temperature max. 80 °C (176 °F) (⇒display group 003, display field 4)

System in Basic Setting **125** →

1 2 3 4

Indicated on display (1-4 = display fields)

- Run engine at idle speed and check specifications after 40 seconds.

01-47

	Display fields			
	1	2	3	4
Display group 125				
Display	**xxxx rpm**	x.x %	**x.x**	**xxxx xxxx**
Indicated	**Engine speed**	Oxygen sensor adaptation at part load	**Oxygen sensor adaptation at idle**	**Diagnosis conditions**
Specification	**650...880 rpm**	-23...23 %	**-12.4...12.4**	**01x1 x100**
				x = Not relevant
Working range	650...5500 rpm	-23...23 %	**-12.4...12.4**	

Relevance of 8 digit number block in display field 4								
1	2	3	4	5	6	7	8	Specifications of diagnosis conditions
0								Reduced correction range active
	1							Part load adaptation active
			1					Oxygen sensor control before three way catalytic converter active
					1			CYCLE Bit = Diagnosis completed
						0		Diagnosis malfunction free
							0	DTC memory malfunction free

- Press -C- button.

01-48

Work step: 11

Diagnosis: Oxygen Sensor (O2S) aging (regulating frequency extended)

Test conditions

- Vehicle stationary

Basic Setting **HELP**

Input display group number

Indicated on display

- Press buttons -1-, -3- and -0- to input display group 130 and press -Q- button to confirm input.

System in Basic Setting **130** →

1 2 3 4

Indicated on display (1-4 = display fields)

- Increase engine speed to 2500-3500 RPM for 20 seconds and check the specifications.

Note:

In display field 3 (period counter) in the following table for vehicles m.y. 97 > the specification is given as 10. Vehicles m.y. >97 only require 6 heated oxygen sensor periods for diagnosis.

01-49

	Display fields			
	1	2	3	4
Display group 130				
Display	**xxxx rpm**	**xx s**	**xx**	**xxxx xxxx**
Indicated	**Engine speed**	**Seconds**	**Period counter**	**Diagnosis conditions**
Specification	**2500...3500 rpm**	**0...2 s**	**10**	**1111 x100**
		Period duration of O2S control before Three Way Catalytic Converter (TWC)	Heated Oxygen Sensor (HO2S) periods recognized	
Working range	**650...5500 rpm**	**0...3 s**		

Relevance of 8 digit number block in display field 4								
1	2	3	4	5	6	7	8	Specifications of diagnosis conditions
1								Oxygen sensor control before TWC active
	1							Speed/load range OK.
		1						TWC has its minimum temperature
			1					O2S heating before TWC diagnosis comp.
					1			CYCLE Bit = Diagnosis completed
						0		Diagnosis malfunction free
							0	DTC memory malfunction free

- Press -C- button.

01-50

Work step: 12

Diagnosis: Three Way Catalytic Converter (TWC)

Basic Setting **HELP**

Input display group number

Indicated on display

- Press buttons -1-, -3- and -6- to input display group 136 and press -Q- button to confirm input.

System in Basic Setting **136** →

1 2 3 4

Indicated on display (1-4 = display fields)

- Increase engine speed to 2500-3500 RPM and check specifications after 120 seconds.

01-51

	Display fields			
	1	2	3	4
Display group 136				
Display	**xxxx rpm**	**xxx.x ° C**	**x.xx**	**xxxx xxxx**
Indicated	**Engine speed**	**Three way catalytic converter temperature**	**Amplitude ratio**	**Diagnosis conditions**
Specification	**2500...3500 rpm**	**At least 360 ° C**	**max. 0.15**	**1111 x100**
				x = Not relevant
Working range	650...5500 rpm	0.0...999.9 ° C		

Relevance of 8 digit number block in display field 4								
1	2	3	4	5	6	7	8	Specifications of diagnosis conditions
1								Oxygen Sensor (O2S) control before Three Way Catalytic Converter (TWC) active
	1							TWC has its minimum temperature
		1						Load range OK.
			1					Heated Oxygen Sensor (HO2S) after TWC operationally ready
					1			CYCLE Bit = Diagnosis completed
						0		Diagnosis malfunction free
							0	DTC memory malfunction free

- Press -C- button.

01-52

Work step: 13

Diagnosis: Fuel tank venting system (EVAP canister purge regulator valve)

Test conditions

- Vehicle stationary
- Electrical consumers switched off (radiator coolant fan must not run during the check)
- Air conditioner switched off

Note:

The engine must be at idle during this diagnosis because the diagnosis will be interrupted and will not be started again until the engine is revved-up.

Basic Setting **HELP**

Input display group number

Indicated on display

- Press buttons -1-, -5- and -0- to input display group 150 and press -Q- button to confirm input.

System in Basic Setting **150** →

1 2 3 4

Indicated on display (1-4 = display fields)

- Run engine for 30 seconds at idle speed and check specifications.

01-53

	Display fields			
	1	2	3	4
Display group 150				
Display	**xx**	**x.x**	**x.xx g/s**	**xxxx xxxx**
Indicated	**Opening degrees**	**Oxygen Sensor (O2S) control**	**Idling control**	**Diagnosis conditions**
Specification	**0...100**	**-7.8...-23 or 7.8...23 or maximum 0.39 g/s**		**1110 x100**
	Minimum opening of EVAP valve	O2S control deviations during diagnosis	O2S control deviations during diagnosis	x = Not relevant
Working range	0...100 %	-25...25		

Relevance of 8 digit number block in display field 4								
1	2	3	4	5	6	7	8	Specifications of diagnosis conditions
1								O2S control before three way catalytic converter active
	1							Idling
		1						Starting temperature warmer than -5 °C
			0					Altitude up to max. 2600 m above sea level
					1			CYCLE Bit = Diagnosis completed
						0		Diagnosis malfunction free
							0	DTC memory malfunction free

- Press → button.

Work step: 14

- Read the readiness code ⇒ Page 01-31

- If the readiness code is not OK, perform optional work steps 15 through 22.

Work step: 15

Diagnosis: Vehicle Speed Sensor (VSS)

Rapid data transfer **HELP**

Select function

Indicated on display

- Press buttons -0- and -4- to select "Basic Setting" function 04 and press -Q- button to confirm input.

Basic Setting **HELP**

Input display group number

Indicated on display

- Press buttons -1-, -8- and -0- to input display group 180 and press -Q- button to confirm input.

System in Basic Setting **180** →

1 2 3 4

Indicated on display: (1-4 = display fields)

- Test drive according to the following special requirements:
  - Select drive range 2 (automatic) or 3rd gear (manual)
  - Engine speed above 3500 and 5 seconds ...

  ... then release accelerator pedal for 3 seconds.

- After 3 seconds, vehicle speed must still be at least 20 km/h (13 mph) and have been in deceleration fuel cut-off for a minimum of 2 secs.

- Check specifications during test drive (second technician necessary). See airbag warning ⇒ Page 01-33 .

	Display fields			
	1	2	3	4
Display group 180				
Display	**xxxx rpm**	**xxx.x °C**	**km/h**	**xxxx xxxx**
Indicated	**Engine speed**	**Coolant temperature**	**Vehicle speed**	**Diagnosis conditions**
Specification	**5...10 seconds at least 3500 rpm**	**At least 80 °C**	**25...50 km/h**	**x111 x100**
				x = Not relevant
Working range	650...5500 rpm	-46.5...141.0 °C		

Relevance of 8 digit number block in display field 4								
1	2	3	4	5	6	7	8	Specifications of diagnosis conditions
	1							Engine speed for this check is OK.
		1						Coolant temperature OK.
			1					Overrun cut-off is active
					1			CYCLE Bit = Diagnosis completed
						0		Diagnosis malfunction free
							0	DTC memory malfunction free

- Press -C- button.

01-56

Work step: 16

Diagnosis: Knock Sensor (KS) 1

Test conditions

- Vehicle stationary

Basic Setting **HELP**

Input display group number

Indicated on display

- Press buttons -1-, -4- and -5- to input display group 145 and confirm entry with -Q- button.

System in Basic Setting **145** →

1 2 3 4

Indicated on display: (1-4 = display fields)

- Increase engine speed to at least 3200 RPM and check specifications after 15 seconds.

01-57

	Display fields			
	1	2	3	4
Display group 145				
Display	**xxxx rpm**	**x**	**x**	**xxxx xxxx**
Indicated	**Engine speed**	**Knock Sensor (KS) 1**	**Wiring open circuit counter**	**Diagnosis conditions**
Specification	**At least 3200 rpm**	**max. 7**	**0**	**xxxx 1100**
		Amplification factor of knock sensor signal	Wiring open circuit diagnosed	x = Not relevant
Working range	650...5500 rpm			

Relevance of 8 digit number block in display field 4								
1	2	3	4	5	6	7	8	Specifications of diagnosis conditions
				1				Knock sensor diagnosis is active
					1			CYCLE Bit = Diagnosis completed
						0		Diagnosis malfunction free
							0	DTC memory malfunction free

- Press -3- button ((VAG 1551) or ↑ button ((VAG 1552).

01-58

Work step: 17

Diagnosis: Knock Sensor (KS) 2

Test conditions

- Vehicle stationary

System in Basic Setting **145** →

1 2 3 4

Indicated on display: (1-4 = display fields)

- Increase engine speed to at least 3200 RPM and check specifications after 15 seconds.

01-59

	Display fields			
	1	2	3	4
Display group 146				
Display	**xxxx rpm**	**x**	**x**	**xxxx xxxx**
Indicated	**Engine speed**	**Knock Sensor (KS) 2**	**Wiring open circuit counter**	**Diagnosis conditions**
Specification	**At least 3200 rpm**	**max. 7**	**0**	**xxxx 1100**
		Amplification factor of knock sensor signal	Wiring open circuit diagnosed	x = Not relevant
Working range	650...5500 rpm			

Relevance of 8 digit number block in display field 4								
1	2	3	4	5	6	7	8	Specifications of diagnosis conditions
				1				Knock sensor diagnosis is active
					1			CYCLE Bit = Diagnosis completed
						0		Diagnosis malfunction free
							0	DTC memory malfunction free

- Press -C-button.

Work step: 18

Diagnosis: Heated Oxygen Sensor (HO2S)
(before three way catalytic converter)

Basic Setting **HELP**

Input display group number

Indicated on display

- Press buttons -1-, -1- and -5- to input display group 115 and press -Q- button to confirm input.

System in Basic Setting **115** →

1 2 3 4

Indicated on display (1-4 = display fields)

- Increase engine speed to 2200-2800 RPM and check the specifications.

	Display fields			
	1	2	3	4
Display group 115				
Display	**xxx.x ° C**	**xxx.x ° C**	**x.xx V**	**xxxx xxxx**
Indicated	**Engine coolant temperature**	**Three way catalytic converter temperature**	**Heated Oxygen Sensor (HO2S) voltage before three way catalytic converter**	**Diagnosis conditions**
Specification	**At least 60 ° C**	**Approx. 360 ° C**	**Fluctuating**	**1011 x100**
		---	---	x = Not relevant
Working range	-46.5...141.0 ° C	0.0...999.9 ° C	0...1.0 V	

Relevance of 8 digit number block in display field 4								
1	2	3	4	5	6	7	8	Specifications of diagnosis conditions
1								HO2S before Three Way Catalytic Converter (TWC) is switched on
	0							HO2S is operationally warm
		1						HO2S before TWC is operationally ready
			1					Oxygen sensor control before TWC is active
					1			CYCLE Bit = Diagnosis completed
						0		Diagnosis malfunction free
							0	DTC memory malfunction free

- Press -3- button ((VAG 1551) or ↑ button ((VAG 1552).

01-62

Work step: 19

Diagnosis: Heated Oxygen Sensor (HO2S) after three way catalytic converter

System in Basic Setting **116** →

1 2 3 4

Indicated on display (1-4 = display fields)

- Increase engine speed to 2200-2800 RPM for 15 seconds and check specifications.

	Display fields			
	1	2	3	4
Display group 116				
Display	**xxxx ms**	**xxx.x °C**	**x.xx V**	**xxxx xxxx**
Indicated	**Switching time delay of Heated Oxygen Sensor (HO2S) after three way catalytic converter**	**Three way catalytic converter temperature**	**HO2S voltage after three way catalytic converter**	**Diagnosis conditions**
Specification	**Approx. 1200 ms**	**At least 360 °C**	**At least 0.6 V**	**1011 x100**
	System will be enriched	---	---	x = Not relevant
Working range		0.0...999.9 °C	0...1.0 V	

01-63

Relevance of 8 digit number block in display field 4								
1	2	3	4	5	6	7	8	Specifications of diagnosis conditions
1								Oxygen sensor heating after Three Way Catalytic Converter (TWC) is switched on
	0							HO2S is operationally warm
		1						HO2S after TWC operationally ready
			1					Oxygen sensor control before TWC is active
					1			CYCLE Bit = Diagnosis completed
						0		Diagnosis malfunction free
							0	DTC memory malfunction free

- Press -C-button.

01-64

Work step: 20

Diagnosis: Oxygen Sensor (O2S) heating (before and after three way catalytic converter)

Basic Setting **HELP**

Input display group number

Indicated on display

- Press buttons -1-, -2- and -0- to input display group 120 and press -Q- button to confirm input.

System in Basic Setting **120** →

1 2 3 4

Indicated on display (1-4 = display fields)

- Increase engine speed to 2200-2800 RPM and check the specifications.

01-65

	Display fields			
	1	2	3	4
Display group 120				
Display	**xxx.x ° C**	**xxx s**	**xx.x Ω**	**xxxx xxxx**
Indicated	**Three way catalytic converter temp.**	**Seconds**	**Resistance**	**Diagnosis conditions**
Specification	**At least 360 ° C**	**120 s**	**4.5...15.6 Ω**	**1111 x100**
		Time between O2S heating switches on and begin. of diagnosis	Resistance of O2S heating before three way catalytic converter	x = Not relevant
Working range	0.0...999.9 ° C	0.0...500 s	0.0...65.0 Ω	

Relevance of 8 digit number block in display field 4								
1	2	3	4	5	6	7	8	Specifications of diagnosis conditions
1								O2S heating before TWC switched on
	1							Heated Oxygen Sensor (HO2S) before TWC vaporization point exceeded
		1						HO2S before TWC operationally ready
			1					O2S heating before TWC operationally ready
					1			CYCLE Bit = Diagnosis completed
						0		Diagnosis malfunction free
							0	DTC memory malfunction free

01-66

- Press -3- button ((VAG 1551) or ↑ button ((VAG 1552).

System in Basic Setting **121** → Indicated on display (1-4 = display fields)

1 2 3 4

- Increase engine speed to 2200-2800 RPM and check specifications.

	Display fields			
	1	2	3	4
Display group 121				
Display	**xxx.x °C**	**xxx s**	**xx.x Ω**	**xxxx xxxx**
Indicated	**Three way catalytic converter temperature**	**Seconds**	**Resistance**	**Diagnosis conditions**
Specification	**At least 360 °C**	**120 s**	**4.5...15.6 Ω**	**1111 x100**
		Time between O2S heating switches on and beginning of diagnosis	Resistance of O2S heating after three way catalytic converter	x = Not relevant
Working range	0.0...999.9 °C	0.0...500 s	0.0...65.0 Ω	

Relevance of 8 digit number block in display field 4								
1	2	3	4	5	6	7	8	Specifications of diagnosis conditions
1								O2S heating after TWC switched on
	1							O2S after TWC vaporization point exceeded
		1						HO2S after TWC operationally ready
			1					O2S heating after TWC operationally ready
					1			CYCLE Bit = Diagnosis completed
						0		Diagnosis malfunction free
							0	DTC memory malfunction free

- Press -C- button.

Work step: 21

Diagnosis: Throttle valve control module

Note:

There are no specifications for this diagnosis. The values in the display fields are typical for this diagnosis. If other values are shown it does not indicate a system malfunction. The diagnostic functions run in the background during the check.

- Press buttons -1-, -4- and -0- to input display group 140 and press -Q- button to confirm input.

System in Basic Setting **140** →

1 2 3 4

Indicated on display (1-4 = display fields)

- Run engine at idle speed and check specifications.

	Display fields			
	1	2	3	4
Display group 140				
Display	**x.xx ms**	**xx**	**x.x V**	**xxxx xxxx**
Indicated	**Engine load**	**Idle actuator position**	**Throttle valve potentiometer voltage**	**Diagnosis conditions**
Specification	**1.4...2.4 ms**	**65...85**	**3.0...4.0 V**	**---**

- Run engine at idling speed.
- Press -3- button ((VAG 1551) or ↑ button ((VAG 1552).

01-69

System in Basic Setting **141** →

1 2 3 4

Indicated on display (1-4 = display fields)

- Run engine at idle speed.

	Display fields			
	1	2	3	4
Display group 141				
Display	**xx**	**xxx**	**xxx**	**xxxx xxxx**
Indicated	**Throttle valve actuator**	**Throttle valve actuator**	**Throttle valve actuator**	**Diagnosis conditions**
Specification	**65...85**	**65...85**	**90...170**	**---**
	Actual position of throttle valve actuator	Throttle valve actuator specification	Throttle valve actuator integrator	

- Press -3- button ((VAG 1551) or ↑ button ((VAG 1552).

System in Basic Setting 142 →

1 2 3 4

Indicated on display (1-4 = display fields)

- Run engine at idle speed.

	Display fields			
	1	2	3	4
Display group 142				
Display	**xx**	**xxx**	**xx.x**	**xxxx xxxx**
Indicated	**Throttle valve actuator**	**Throttle valve actuator**	**Throttle valve actuator**	**Diagnosis conditions**
Specification	**65...85**	**80...90**	**20...30**	**---**
	Throttle valve actuator emergency running cross section	Throttle valve actuator minimum stop	Throttle valve actuator maximum stop	

- Press → button.

Work step: 22

- Read readiness code ⇒ Page 01-31 .
- Press buttons -0- and -6- to select "End Output" function 06 and press -Q- button to confirm input.

Output Diagnostic Test Mode (DTM) (function 03)

The output Diagnostic Test Mode (DTM) actuates the following components in the stated sequence:

1. Cylinder 1 fuel injector -N30-
2. Cylinder 2 fuel injector -N31-
3. Cylinder 3 fuel injector -N32-
4. Cylinder 4 fuel injector -N33-
5. Cylinder 5 fuel injector -N83-
6. Cylinder 6 fuel injector -N84-
7. Evaporative Emission (EVAP) canister purge regulator valve -N80-
8. Secondary Air Injection (AIR) solenoid valve -N112-
9. Secondary Air Injection (AIR) pump relay -J299-
10. Evaporative Emission (EVAP) canister purge solenoid valve -N115-

Special tools, testers and auxiliary items

- VAG 1551/1552 scan tool with VAG 1551/3 adapter cable
- VAG 1598/18 test box
- Connector test kit VW 1594
- VAG 1527B voltage tester

Test conditions

- Fuse 18 OK
- Throttle position (TP) -G69- OK
- Closed throttle position switch OK, checking ⇒ Page 24-68 , checking throttle valve control module

Test sequence

- Connect the VAG 1551/1552 scan tool and with ignition switched on select "Engine Electronics" address word 01 ⇒ Page 01-7 .

Rapid data transfer **HELP** **Select function**	⮜	Indicated on display - Operate VAG 1551/1552 scan tool taking into account the information on the display: - Press buttons -0- and -3-to select "Output Diagnostic Test Mode" function 03.
Rapid data transfer **03 - Output Diagnostic Test Mode**	⮜	Indicated on display To activate cylinder 1 fuel injector -N30-: - Press -Q- button to confirm input.
Output Diagnostic Test Mode → **Cylinder 1 fuel injector -N30**	⮜	Indicated on display - Open throttle valve fully and close again. • The cylinder 1 fuel injector must click.

01-73

Note:

All fuel injectors click extremely quietly

To activate fuel injectors for cylinders 2-6, in each case:

- Open throttle valve fully again and close.

To skip individual tests:

- Press → button.

If one or more fuel injectors do not click:

- Continue Output DTM to the end.
- Switch ignition off.
- Check fuel injector actuation (resistance and current supply) ⇒ Page 24-115 .

To activate Evaporative Emission (EVAP) canister purge regulator valve -N80-:

- Press → button.

Output Diagnostic Test Mode →

EVAP canister purge regulator valve -N80

Indicated on display

- The EVAP canister purge regulator valve must click until the next component is activated by pressing the → button.

- Pull hose off purge regulator valve (from EVAP canister).
- Connect auxiliary hose.

- During Output DTM blow into auxiliary hose (in direction of throttle housing).

• Valve must open and close

If the purge regulator valve does not open and close:

- Disconnect 2-pin connector at valve and connect VAG 1527B voltage tester with test leads from VW 1594 to disconnected connector.

• The LED must flash

If LED flashes:

- Replace EVAP canister purge regulator valve.

If LED does not flash:

- Switch ignition off.

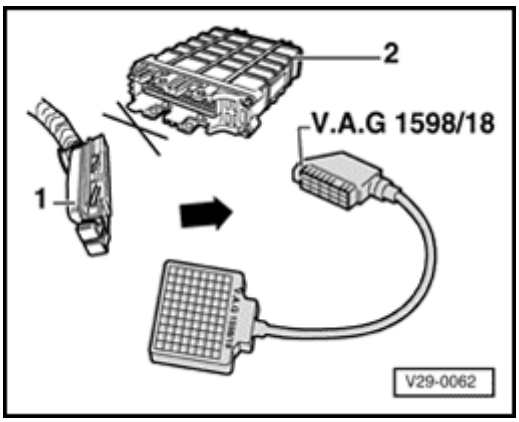

- Connect VAG 1598/18 test box to ECM wiring harness (arrow).
- Check wiring between test box and 2-pin connector for open circuit according to wiring diagram.

  Terminal 1 and test box socket 31

  Resistance: Max. 1.5 ohms (Ω)
- Check wiring between 2-pin connector terminal 2 and central electrical system for open circuit according to wiring diagram. Resistance: Max. 1.5 ohms (Ω)

01-75

- Check wiring between ECM connector and 2-pin connector terminal 1 for short circuit to wire terminal 2 and to vehicle Ground (GND), according to wiring diagram.

  Terminal 2 and test box socket 31

  Specification: ∞ ohms (Ω)

- Additionally, check wiring for short circuit to battery positive (B+).

  Specification: ∞ ohms (Ω)

If no malfunction in wiring is detected:

- Reconnect harness connector to EVAP canister purge regulator valve.

- Replace Engine Control Module (ECM) -J220- .

To activate Secondary Air Injection (AIR) solenoid valve -N112-:

- Press → button.

Output Diagnostic Test Mode →

Secondary AIR solenoid valve -N112

Indicated on display

- The Secondary air injection solenoid valve must run until the next component is activated by pressing the → button.

If the relay does not click:

- Disconnect 2-pin connector at Secondary Air Injection (AIR) solenoid valve -N112-.

01-76

- Connect VAG 1527B voltage tester using test leads from VW 1594 to disconnected connector.

  - LED must light up

If LED lights up (voltage supply OK):

- Replace Secondary Air Injection (AIR) solenoid valve -N112-.

If LED does not light up:

- Check wiring to Secondary Air Injection (AIR) solenoid valve -N112- according to wiring diagram.

- Check Secondary Air Injection (AIR) pump relay -J299-:

⇒*Electrical Wiring Diagrams, Troubleshooting & Component Locations*

To activate Secondary Air Injection (AIR) pump relay -J299-:

- Press → button.

Output Diagnostic Test Mode →

Secondary air injection pump relay - 299

Indicated on display

  - The Secondary Air Injection (AIR) pump relay -J299- activates the secondary air pump motor, and this must run at intervals until the next component is activated by pressing the → button.

If the secondary air pump motor does not run:

- Disconnect 2-pin connector at Secondary Air Injection (AIR) pump motor -V101-.

01-77

- Connect VAG 1527B voltage tester using test leads from VW 1594 to disconnected connector.

• LED must light up

If LED lights up (voltage supply OK):

- Replace Secondary Air Injection (AIR) pump motor -V101-.

If LED does not light up:

- Check Secondary Air Injection (AIR) pump relay -J299-:

⇒*Electrical Wiring Diagrams, Troubleshooting & Component Locations*

- Check wiring to Secondary Air Injection (AIR) pump motor -V101- according to wiring diagram.

- Press → button.

Output Diagnostic Test Mode →

EVAP canister purge solenoid valve -N115

Indicated on display

Disregard display.

- Press → button.

Rapid data transfer **HELP**

Select function

Indicated on display

- Press buttons -0- and -6- to select "End Output" function 06 and press -Q- button to confirm input.

01-78

Read Measuring Value Block (function 08)

Note:

To change to another display group proceed as follows:

Display group	VAG 1551 scan tool	VAG 1552 scan tool
Higher	Press -3- button	Press ↑ button
Lower	Press -1- button	Press ↓ button
Skip	Press -C- button	Press -C- button

Test conditions

- Control module in "Read Measuring Value Block" function 08
- Vehicle stationary, engine idling
- Engine oil temperature min. 80 °C (176 °F)
- Electrical consumers switched off (radiator coolant fan must not run during the check)
- Air conditioner switched off

Display group overview

Display group 000 (decimal displayed value)												
• Engine running at idle speed, control module in "Read Measuring Value Block" function 08												
Display fields											**Specification**	**Corresponds to**
1	2	3	4	5	6	7	8	9	10	Partial load adaption value for Oxygen Sensor (O2S) control (before three way catalytic converter)	118 - 138	-7 to 7%
									Idle adaption value for O2S control (before three way catalytic converter)		241 - 255 or 0 - 14	-10 to 10%
								O2S control			96 - 160	-5 to 5%
							Mass air flow adaptation value at idle				112 - 144	-5 to 5 kg/h
						Idle control (idle mass air flow)					112 - 144	-5 to 5 kg/h
					Throttle valve angle						0 - 23	0 to 10 ∠°
				Battery voltage							176 - 212	12.0 to 14.0 V
			Engine speed								65 - 80	650 to 800 RPM
		Engine load									28 - 58	1.4 to 2.4 ms
Engine coolant temperature											170 - 204	80° to 108 °C

- If one of the specifications are not attained ⇒ Page 01-80 , evaluating display group 000.

- For additional steps see Repair procedures:

Notes:

- *Press → button to end Read Measuring Value Block .*
- *After terminating Read Measuring Value Block , press buttons -0- and -6- to input End Output function 06 and press - - button to confirm input.*

Evaluating display group 000

Display field: 1	**Possible malfunction cause**	**Malfunction elimination**
More than 204	♦ Engine Coolant Temperature (ECT) sensor	- Check ECT sensor ⇒ Page 24-88
Less than 170	♦ ECT sensor ♦ Thermostat faulty (open)	- Check thermostat: ⇒ *Repair Manual, 2.8 Liter VR6 2V Engine Mechanical, Engine Code(s): AAA, Repair Group 19*
Display field: 2	**Possible malfunction cause**	**Malfunction elimination**
More than 58	♦ Electrical consumer switched on ♦ Oxygen Sensor (O2S) control on limit	- Switch off electrical consumers - Check Heated Oxygen Sensor (HO2S) and O2S control (before three way catalytic converter) ⇒ Page 24-25 - Check O2S aging (before three way catalytic converter) ⇒ Page 24-56
Less than 28	♦ Unmetered air (outside air) ♦ Fuel pressure regulator faulty/hose fallen off	- Check intake air system for leaks (outside air) ⇒ Page 24-123 - Check fuel pressure regulator ⇒ Page 24-120

Display field: 3	Possible malfunction cause	Malfunction elimination
Less than 65	♦ Driving range selected ♦ Throttle valve control module faulty	- Selector lever in P or N position - Check throttle valve control module ⇒ Page 24-68
More than 80	♦ Closed throttle position switch closed ♦ Throttle valve control module faulty ♦ Unmetered air	- Check throttle valve control module ⇒ Page 24-68 - Check intake air system for leaks (outside air) ⇒ Page 24-123
Display field: 4	**Possible malfunction cause**	**Malfunction elimination**
Less than 176	♦ Generator faulty ♦ Battery discharged/faulty	- Check Engine Control Module (ECM) voltage supply ⇒ Page 24-105 - Check generator - Check battery
More than 212	♦ Voltage regulator faulty	- Check voltage regulator
Display field: 5	**Possible malfunction cause**	**Malfunction elimination**
Less than 0	♦ Not possible	-
More than 23	♦ Basic setting of throttle valve control module has not been performed ♦ Throttle valve control module faulty ♦ Accelerator pedal cable adjustment	- Perform basic setting ⇒ Page 24-85 - Check throttle valve control module ⇒ Page 24-68 - Adjust accelerator pedal cable: ⇒ *Repair Manual, 2.8 Liter VR6 2V Engine Mechanical, Engine Code(s): AAA, Repair Group 20*

01-82

Display field: 6 7	**Possible malfunction cause**	**Malfunction elimination**
Less than 112	♦ Unmetered air after throttle valve	- Check intake air system for leaks (outside air) ⇒ Page 24-123
More than 144	♦ Increased engine load	- Switch off electrical consumer
Display field: 8	**Possible malfunction cause**	**Malfunction elimination**
Less than 96	♦ Engine too rich, O2S control weakens mixture ♦ O2S control at limit ♦ Lots of fuel from EVAP canister ♦ Fuel pressure regulator faulty/hose fallen off	- Check HO2S and O2S control (before three way catalytic converter) ⇒ Page 24-25 - Check fuel pressure regulator ⇒ Page 24-120
More than 160	♦ Engine too lean, O2S control enriches mixture ♦ Unmetered air (outside air) ♦ Fuel injectors faulty ♦ O2S control at limit	- Check HO2S and O2S control (before three way catalytic converter) ⇒ Page 24-25 - Check intake air system for leaks (outside air) ⇒ Page 24-123 - Check fuel injectors ⇒ Page 24-115
128	♦ Shortage of fuel ♦ O2S control blocked	- Check amount of fuel in tank - Check HO2S and O2S control (before three way catalytic converter) ⇒ Page 24-25

Display field: 9	Possible malfunction cause	Malfunction elimination
Less than 241 or more than 14	♦ ⇒ Page 24-29 , evaluating display group 025	
Display field: 10	**Possible malfunction cause**	**Malfunction elimination**
Less than 118 or more than 138	♦ ⇒ Page 24-29 , evaluating display group 025	

01-84

VAG 1551 Scan Tool (ST), connecting and selecting CARB/OBD II address word 33

Special tools, testers and auxiliary items

- VAG 1551/1552 scan tool with VAG 1551/3 adapter cable

Test conditions

- Fuses 15, 18 and 22 OK

Work sequence

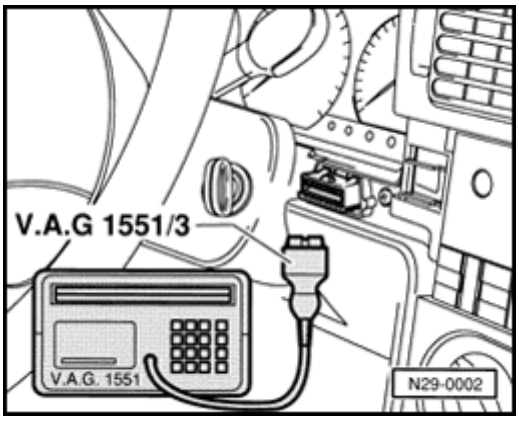

- Open cover for Data Link Connector (DLC).
- Connect VAG 1551/1552 scan tool with VAG 1551/3 adapter cable.

Depending on desired function:

- Switch ignition on, or start engine.

Operate VAG 1551/1552 scan tool taking into account the information on the display:

Selectable functions for address word 33 CARB / OBDII

- Press -1- button to select "Rapid data transfer" operating mode 1.
- Press the -3- button twice to select "CARB / OBD II" address word 33.

01-85

Rapid data transfer

33 - OBD II

Display will appear as shown

- Press Q button to confirm input.

OBD II Scan Tool

Select mode 1.. 2.. 3.. 4.. 5.. 6.. 7..

Display will appear as shown

The following modes can be selected:

Mode 1	Current data ⇒ Page 01-86
Mode 2	Freeze frame data ⇒ Page 01-95 or ⇒ Page 01-87
Mode 3	DTC memory ⇒ Page 01-96
Mode 4	Clear DTC memory ⇒ Page 01-97
Mode 5	Oxygen sensor signal (B1-S1) ⇒ Page 01-98
Mode 6	Transfer measured values. Measured values that are not being monitoring will be output.
Mode 7	Interrogate DTC memory. Malfunctions which have not switched ON the MIL can be interrogated.

Note:

When a mode is selected, the control module replies with a 4 on the display in front of the mode selected. Example: mode 2 will be indicated in the display with mode 42.

01-86

Current data, mode 1

In mode 1 the current diagnostic data can be interrogated. Additionally the readiness code can be displayed (PID1 display field 4).

Breakdown of parameter identification (PID) ⇒ Page 01-87 diagnostic data.

The On Board Diagnostic (OBD) program can be used to check whether individual parameters correspond to actual engine condition.

- Press button -1- to select mode 1, current data.

Mode 41 PID x Module 10* →

Current data

Display will appear as shown

Module 10* or 1A* will be displayed alternately when:

- Module 10 = Engine Control Module (ECM) -J220-, or
- Module 1A = Transmission Control Module (TCM) -J217- have the same parameter identifications (PID)

Example: Engine Coolant Temperature is measured at the ECM and ATF at the TCM.

The diagnostic data must be individually interrogated via the → button. Press the Print button to obtain a printout.

The MIL is said to be switched ON when the engine is not idling, and only the ignition is switched ON.

01-87

Diagnostic data

Relevance of figures in 8 digit number block

Mode 41 PID 1 Module 10 → ⮜ Display will appear as shown

00000000 xxxxxxxx xxxxxxxx xxxxxxxx

Display positions 2...8 indicate number of DTCs stored									
Display positions									**Specification**
1	2	3	4	5	6	7	8	Number of DTCs stored	0
								MIL switched off [1]	0

[1] When diagnostic data only is displayed, the specification = 1.

Relevance of figures in 8 digit number block

Mode 41 PID 1 Module 10 → ⮜ Display will appear as shown

xxxxxxxx 00000111 xxxxxxxx xxxxxxxx

Display positions 1 to 5 are not required									
Display positions									**Specification**
1	2	3	4	5	6	7	8	Component monitoring	1
								Fuel system monitoring	1
								Misfire recognition	1
									0

01-88

Relevance of figures in 8 digit number block

Mode 41 PID 1 Module 10 →

xxxxxxxx xxxxxxxx 01101101 xxxxxxxx

Display will appear as shown

If specification is 0, the diagnostic capability is not recognized by ECM.									
If specification is 1, the diagnostic capability is recognized by ECM.									
Display fields									**Specification**
1	2	3	4	5	6	7	8	Three way catalytic converter	1
								Three way catalytic converter heating (not available)	0
								Fuel tank venting system	1
								Secondary air injection (AIR) system	1
								A/C (no diagnosticcapability)	0
								Heated Oxygen Sensor (HO2S)	1
								Oxygen Sensor (O2S) heating	1
								Exhaust Gas Recirculation (EGR) system (not available)	0

01-89

Mode 41 PID 1 Module 10 → <

xxxxxxxx xxxxxxxx xxxxxxxx 00000000

Display will appear as shown

If the specification is not obtained in display field 4 and a 1 is displayed, then the appropriate diagnostic sequence has not yet been performed. The readiness code must still be created ⇒ Page 01-33 .

Relevance of figures in 8 digit number block

If specification is 0, the diagnostic program for the readiness code has been completed.									
Display fields									**Specification**
1	2	3	4	5	6	7	8	Three way catalytic converter	0
								Three way catalytic converter heating (not available)	0
								Fuel tank venting system	0
								Secondary air injection system	0
								A/C (no diagnostic capability)	0
								Heated oxygen sensor	0
								Oxygen sensor heating	0
								Exhaust Gas Recirculation (EGR) system (not available)	0

01-90

- Press → button to display any additional diagnostic data.

Mode 41 PID 3 Module 10 →

Fuel System xxx1xxxx xxxxxxxx

PID3: Injection status

When the 4th position from the left is 1, the injection status is recognized as available

- Press → button.

Mode 41 PID 4 Module 10 →

Calculated load value **2**

PID4: Calculated load value %

Specification at idle approx.: 2%

- Press → button.

Mode 41 PID 5 Module 10 →

Engine Coolant Temp. **°C**

PID5: Engine coolant temperature °C

Indicates the current engine coolant temperature.

Specification for engine at normal operating temperature: 80° to 105°C (176° to 221°F)

- Press → button.

Mode 41 PID 5 Module 1A →

Coolant temp. **°C**

PID5: Coolant temperature °C

Indicates the current ATF temperature.

When the ATF specification is above 140°C (284°F) with engine at normal operating temperature, 80° to 105°C (176° to 221°F) a DTC will be stored.

01-91

- Press → button.

Mode 41 PID 6 Module 10	→	PID6: Short term fuel trim, Bank 1 %
Short Term Fuel Trim Bank 1	**x**	The Oxygen sensor control integrator in % is displayed here.

- Press → button.

Mode 41 PID 7 Module 10	→	PID7: Long term fuel trim, Bank 1 %
Long Term Fuel Trim Bank 1	**x**	The adaptation increases the value in % depending upon altitude.

- Press → button.

Mode 41 PID 12 Module 10	→	PID12: Engine speed (RPM)
Engine speed	**rpm**	The engine speed (RPM) is displayed here

- Press → button.

Mode 41 PID 12 Module 1A	→	PID12: Engine speed (RPM)
Speed	**rpm**	The input speed (RPM) from transmission is displayed here

01-92

- Press → button.

Mode 41 PID 13 Module 1A	→	PID13: Vehicle speed (km/h)
Speed	**x km/h**	Current vehicle speed display

- Press → button.

Mode 41 PID 13 Module 10	→	PID13: Vehicle speed (km/h)
Speed	**km/h**	Current vehicle speed display

- Press → button.

Mode 41 PID 14 Module 10	→	PID14: Ignition timing advance °
Ignition Timing Advance	**12°**	Specification at idle: 12° fluctuating. If the displayed ignition angle is constant, and later than 12° then the cause can be a faulty knock sensor

- Press → button.

Mode 41 PID 15 Module 10	→	PID15: Intake air temperature °C
Intake Air Temp.	**xxx °C**	Measured at idle, slightly above ambient temperature

01-93

- Press → button.

Mode 41 PID 16 Module 10	→	PID16: Mass air flow g/sec
Air Flow Rate	**4.30 g/sec**	Measured at idle approx.: 4.3 g/sec. If the value is below 2.5 g/sec. unmetered air can be the cause

- Press → button.

Mode 41 PID 17 Module 10	→	PID17: Throttle position %
Throttle Valve Position	**3**	Specification at idle: 2-4%. A too large or small a value leads to DTC: P1582

- Press → button.

Mode 41 PID 18 Module 10	→	PID18: Secondary air injection status
Command Secondary Air	**xxxxx1xx**	When the 3rd position from right is 1, the secondary air injection system is recognized as available

- Press → button.

Mode 41 PID 19 Module 10	→	PID19: Location / Heated oxygen sensor
Location of Oxygen sensor	**xxxxxx11**	When the 1st and the 2nd position from right is 1, the heated oxygen sensors are recognized as available.

01-94

- Press → button.

Mode 41 PID 20 Module 10	→	<
Bank 1 Sensor 1 0.445 V	**x**	

PID20: Heated oxygen sensor 1: 0.445 V x%

- The displayed value in volts must fluctuate between 0 and 1.0 volts.

- Press → button.

Mode 41 PID 21 Module 10	→	<
Bank 1 Sensor 2 0.445 V	**x**	

PID21: Heated oxygen sensor 2: 0.445 V x%

- The displayed value in volts must fluctuate between 0 and 1.0 volt, however it must be at a slower rate than the HO2S before three way catalytic converter.

- Press C button to exit mode 1.

01-95

Freeze frame data, mode 2

Note:

If a malfunction is detected by the Engine Control Module (ECM) and is then stored, simultaneously, the operating conditions existing at the time the malfunction was stored will also be stored, and can be interrogated via mode 2.

Breakdown of the (PID) identification parameters ⇒ Page 01-87 current data.

- Press button 2 to select mode 2 freeze frame data.

Mode 42 0 PID 0 Module 10 →

Freeze Frame Data

Display will appear as shown

- Press → button.

Module 10* or 1A* will be activated (alternately):

- Module 10 = Engine Control Module (ECM) -J220-
- Module 1A = Transmission Control Module (TCM) -J217-

- Press → button, and the operating conditions will be printed out as a block, assuming there is a DTC stored in DTC memory.
- Mode 2 can be exited by pressing the C button.

01-96

DTC memory, mode 3

- Press button -3- to select mode 3 DTC memory.

x Malfunction recognized

Module 10* → MIL off Module 1A*

Display will appear as shown

*Module 10 or 1A will be activated (alternately):

- Module 10 = Engine Control Module (ECM) -J220-
- Module 1A = Transmission Control Module (TCM) -J217-
- MIL OFF / ON = MIL switched OFF or ON

- Press → button, any stored DTCs will be displayed in sequence

P0422

Display will appear as shown (example)

- Press → button.

Notes:

- *If two or more DTCs are stored, the cause of the malfunction could be attributed to the second or following malfunction. Interpreting stored DTCs, ⇒ Page 01-14 , DTC table*
- *After malfunctions have been repaired, Clear DTC memory (⇒ Page 01-97) and create the readiness code again ⇒ Page 01-33 .*

- Press -C- button to exit mode 3.

01-97

Clear DTC memory, mode 4

- Start engine and let idle. Press button -4- to select mode 4 Clear DTC memory.

Note:

DTC codes (if any are stored) must first be read before they can be cleared. Pressing button -4- will not clear the data in DTC memory immediately. In case of operator error, the control module will respond:

OBD II Scan Tool
Cleared DTC memory

Display will appear as shown

By pressing the -C- button mode 4 will be exited

OBD II Scan Tool
Select mode 1.. 2.. 3.. 4.. 5.. 6.. 7..

Display will appear as shown

By pressing the -Q- button DTC memory will be cleared.

Mode 44 Module 10
DTC memory is cleared

Display will appear as shown

Note:

When the - - button is pressed it can cause the engine to run irregularly until mode 4 is exited.

- Press -C- button to exit mode 4.

After repairing malfunctions and erasing DTC memory, the readiness code must be created ⇒ Page 01-33 . Then the readiness code must be interrogated via mode 41 transfer of current diagnostic data ⇒ Page 01-87 .

01-98

Oxygen sensor signal (B1-S1), mode 5

Note:

When a Heated Oxygen Sensor (HO2S) malfunction is stored, use mode 5 to check the HO2S signal output, to see whether the HO2S before three way catalytic converter is within specification, or whether another malfunction is present, e.g. the HO2S after three way catalytic converter is causing an O2S control malfunction.

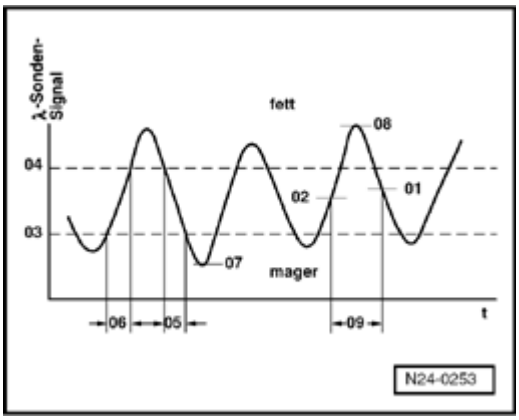

The points 01 to 09 represent:

01 - Rich/lean threshold voltage (constant value)

02 - Lean/rich threshold voltage (constant value)

03 - Lower voltage for calculating switching period

04 - Upper voltage for calculating switching period

05 - Calculated rich/lean switching time

06 - Calculated lean/rich switching time

07 - Minimum test voltage

08 - Maximum test voltage

09 - Time between threshold voltages

- Press button -5- to select mode 5 output oxygen sensor signal.

Mode 45 Test ID 1 Module 10 →

B1-S1 **0.445V**

Display will appear as shown: Test ID 01

Rich/lean threshold voltage: Standard value 0.445 volts

- Press → button.

01-99

Mode 45 Test ID 2 Module 10 →

B1-S1 **0.445V**

Display will appear as shown: Test ID 02

- Lean/rich threshold voltage: constant value 0.445 volts
- If constant value is not obtained, the HO2S is faulty

- Press → button.

For the following HO2S signals three values are always displayed:

1st value =	Minimum value
2nd value =	Actual value
3rd value =	Maximum value

Note:

The displayed Min. and Max. values are constant and do not change. The actual value is displayed as a constant. It will only change when during the test the HO2S supplies a greater or smaller signal.

Mode 45 Test ID 7 Module 10 →

B1-S1 0.148V x.xxV **0.40V**

Display will appear as shown: Test ID 07

- Minimum test voltage
- If the actual value is below 0.148 volts, there is a short to ground.
- When the actual value exceeds 0.4 volts, the malfunction could be the HO2S is not at working temperature, sensor heating is faulty, wiring open circuit to HO2S or a short circuit to positive (B+).

01-100

- Press → button.

Mode 45 Test ID 8 Module 10 →

B1-S1 0.598V x.xxV **1.078V**

Display will appear as shown: Test ID 08

- Maximum test voltage
- If the actual value is above 1.078 volts, there is a short circuit to positive (B+)in the wire to HO2S
- If the actual value is below 0.598 volts, the malfunction could be a HO2S not reaching proper operating temperature, faulty O2S heating or an open circuit in the HO2S wiring.

- Press → button.

Mode 45 Test ID 9 Module 10 →

B1-S1 0.04s x.xxs **1.20s**

Display will appear as shown: Test ID 09

- The display shows the time between the threshold voltages
- If the actual value is below the minimum time of 0.04 seconds, there is a short circuit
- If the actual value exceeds the maximum time of 1.20 seconds, the malfunction could be due to an aged, lazy or contaminated oxygen sensor.

- Press -C- button to exit the program sequence.

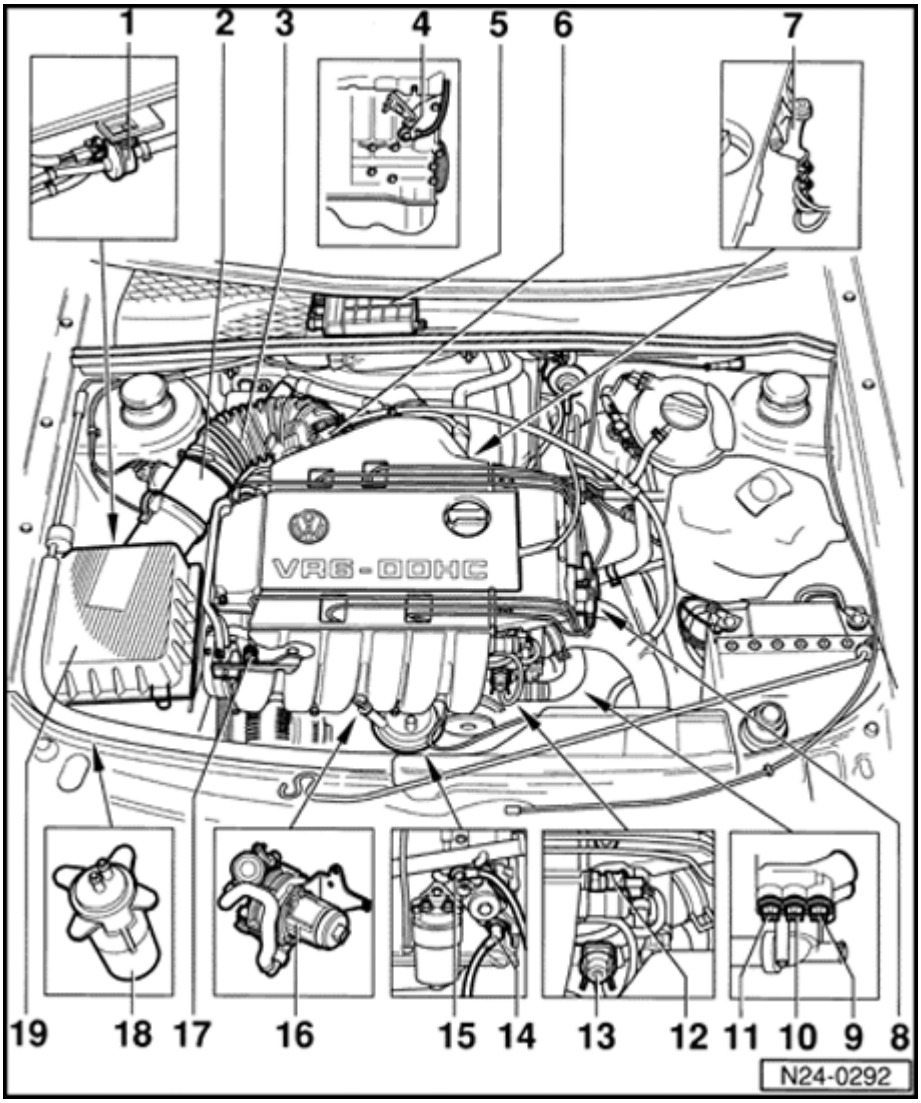

Multiport fuel injection and ignition system

Component locations, overview

1 - Evaporative Emission (EVAP) canister purge regulator valve -N80-

- EVAP canister system

⇒ *Repair Manual, 2.8 Liter VR6 2V Engine Mechanical, Engine Code(s): AAA, Repair Group 20*

2 - Mass Air Flow (MAF) sensor -G70-

3 - Intake air duct

- With connection for Positive Crankcase Ventilation (PCV) heating element -N79-

4 - Knock Sensor (KS) 1 - G61-

- ⇒ Page 28-4 , item 12

5 - Engine Control Module (ECM) - 220-

6 - Throttle valve control module - 338-

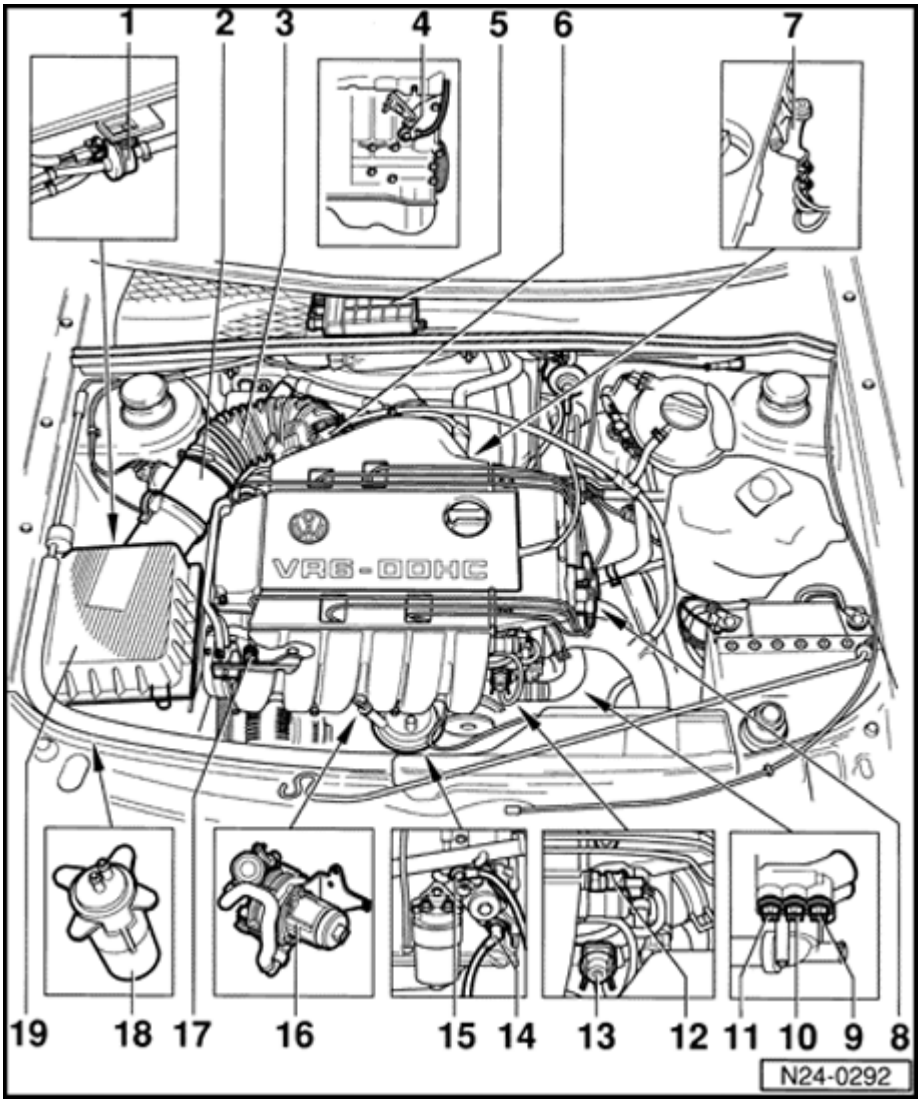

7 - Ground (GND) connection

8 - Ignition coil -N152-

- ⇒ Page 28-2 , item 6

9 - A/C cut-out thermal switch -F163-, and third speed coolant Fan Control (FC) thermal switch -F165-

- Brown, 4-pin
- On vehicles with A/C

10 - Engine Coolant Temperature (ECT) sensor -G62-

- Blue, 2-pin
- For Motronic ECM

11 - After-run coolant Fan Control (FC) thermal switch -F87-, and Engine Coolant Temperature (ECT) sensor -G2-

- Yellow, 4-pin

12 - Intake Air Temperature (IAT) sensor -G72-

13 - Fuel pressure regulator

14 - Engine speed (RPM) sensor -G28-

15 - Knock Sensor (KS) 2 - G66-

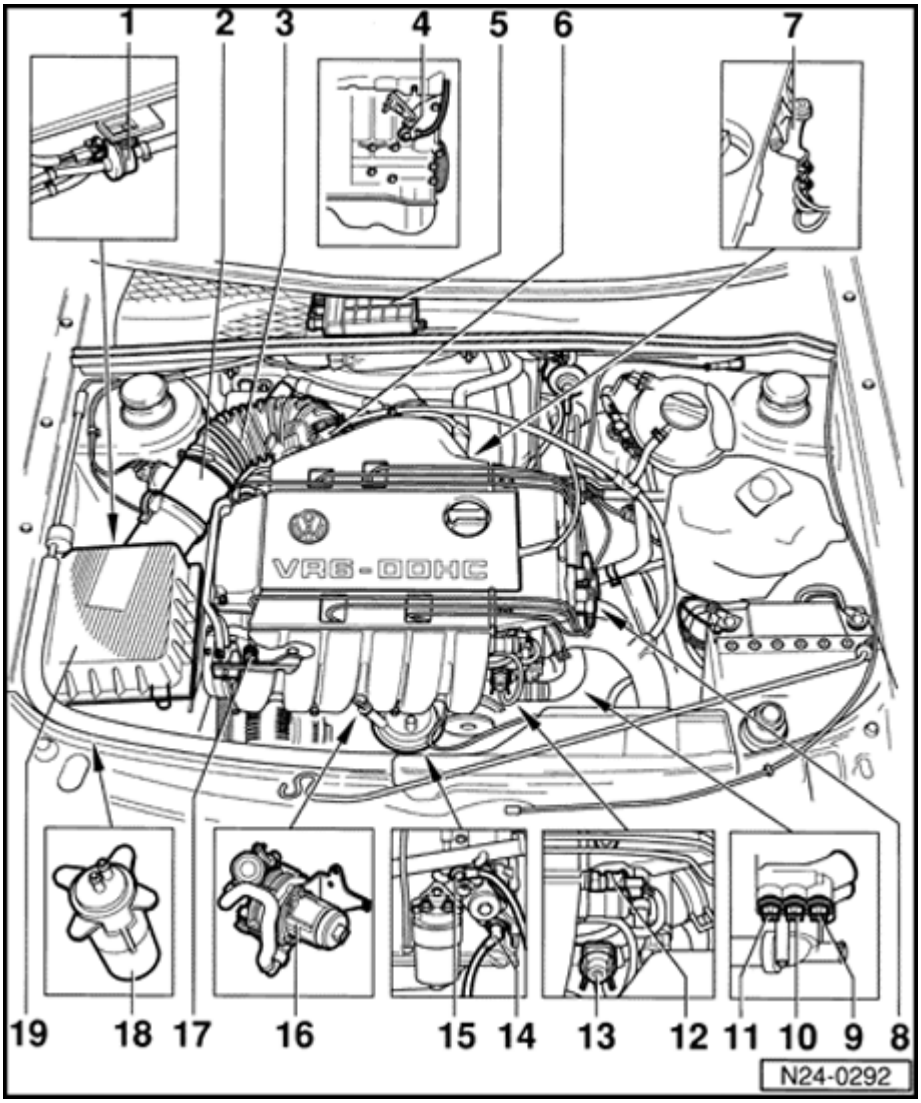

16 - Secondary Air Injection (AIR) pump motor - V101-

- Exhaust gas recirculation system

⇒ *Repair Manual, 2.8 Liter VR6 2V Engine Mechanical, Engine Code(s): AAA, Repair Group 26*

17 - Fuel injectors

- Cylinder 1 -N30-
- Cylinder 2 -N31-
- Cylinder 3 -N32-
- Cylinder 4 -N33-
- Cylinder 5 -N83-
- Cylinder 6 -N84-

18 - EVAP canister

- Below air cleaner
- EVAP system

⇒ *Repair Manual, 2.8 Liter VR6 2V Engine Mechanical, Engine Code(s): AAA, Repair Group 20*

19 - Air cleaner (ACL)

General information

Fuel injection system, servicing

Ignition system, servicing ⇒ Page 28-1

Notes:

- *Fuel hoses in engine compartment must be secured with spring-type clips. The use of clamp or screw-type clips is not permissible.*
- *The control module for the fuel injection and ignition system is equipped with a Diagnostic Trouble Code (DTC) memory. Before carrying out repairs, adjustment work and troubleshooting DTC memory must be checked and vacuum connections checked (outside air).*
- *Components marked with an asterisk (*) are checked via the On Board Diagnostic (OBD) program ⇒ Page 01-12 .*
- *Components marked with a double asterisk (**) are checked via the output Diagnostic Test Mode (DTM) ⇒ Page 01-71 .*
- *For trouble-free operation of the electrical components, a voltage of at least 11.5 volts is necessary.*
- *Do not use sealants containing silicone. Particles of silicone drawn into the engine, will not be consumed during combustion and damage the Heated Oxygen Sensors (HO2S).*

- *Do not use contact sprays or similar agents in the area of the connector for the HO2S. To function correctly HO2S requires reference air, which they receive via the connector. If contact spray gets into the HO2S via this path it will lead to damage/malfunctions.*

- *During some checks it can happen that the Engine Control Module (ECM) will recognize and store a malfunction. Therefore after completing all checks and repairs the DTC memory must be checked and if necessary erased ⇒ Page 01-12 , checking DTC memory.*

Safety precautions ⇒ Page 24-18

Rules for cleanliness ⇒ Page 24-20

Technical data ⇒ Page 24-21

24-6

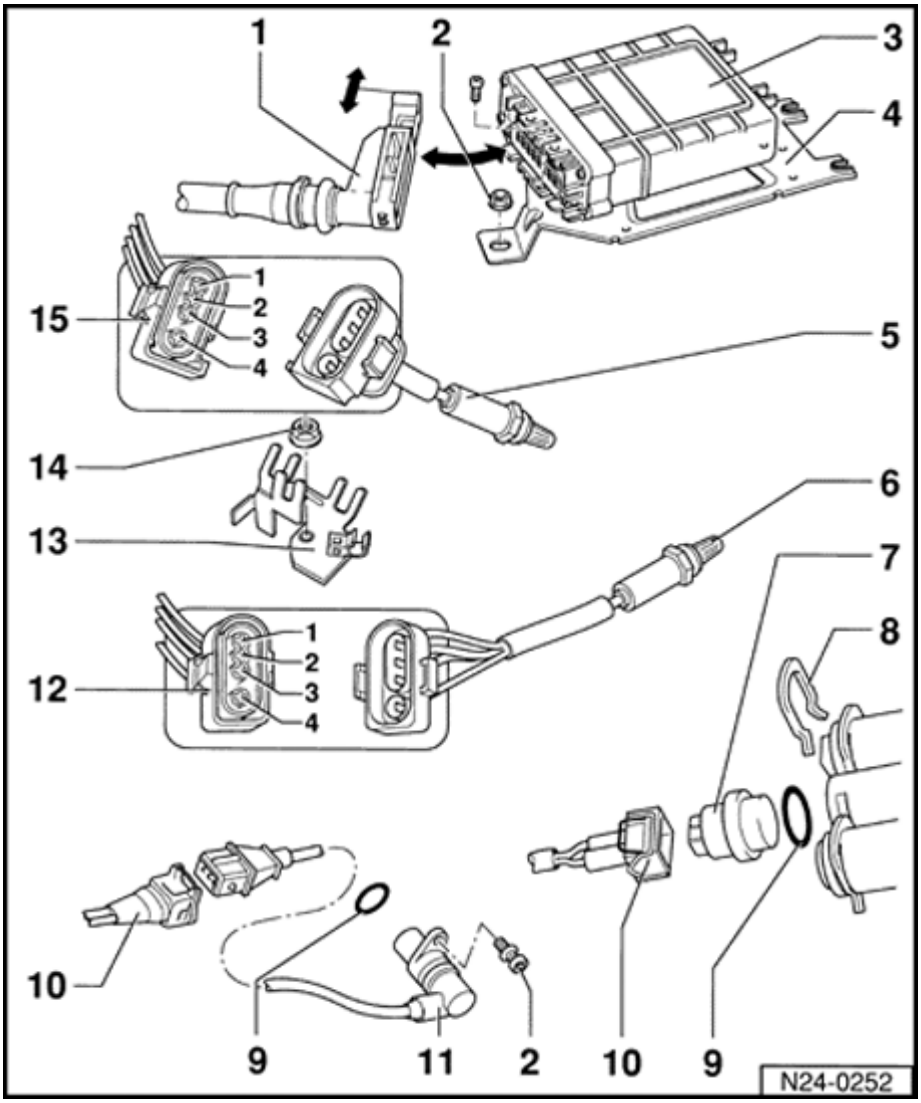

Engine Control Module (ECM), Heated Oxygen Sensor (HO2S), Engine Coolant Temperature (ECT) sensor and engine speed (RPM) sensor, removing and installing

1 - Connector

- Only disconnect or connect with ignition switched off
- Unlatch to disconnect

2 - 10 Nm (7 ft lb)

3 - Engine Control Module (ECM) - 220-*

- Location: in plenum chamber, right side
- For fuel injection system oxygen sensor control, EVAP canister purge regulator valve, speed governing via fuel pump relay, idle speed control, ignition and On Board Diagnostic (OBD)
- Check ECM coding ⇒ Page 01-10

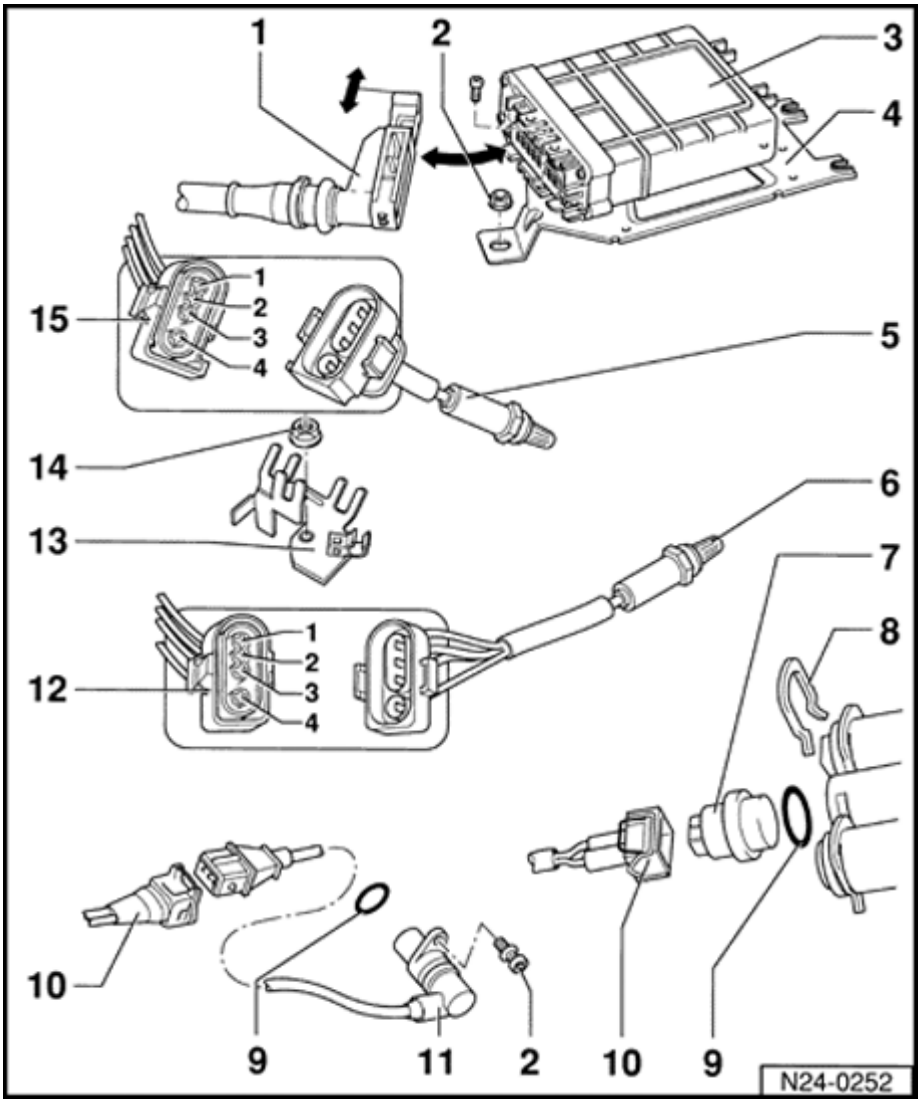

4 - Mounting plate

- For Engine Control Module (ECM) -J220-

5 - Heated Oxygen Sensor (HO2S) 2 -G108-*

- 50 Nm (37 ft lb)
- Installation position: Three Way Catalytic Converter (TWC)
- Only grease threads with "G5"; "G5" must not get into the slots on the HO2S body
- Checking HO2S and O2S control (after three way catalytic converter) ⇒ Page 24-42
- O2S heating voltage supply via Fuel Pump (FP) relay -J17-
- Checking O2S heating (after three way catalytic converter) ⇒ Page 24-49

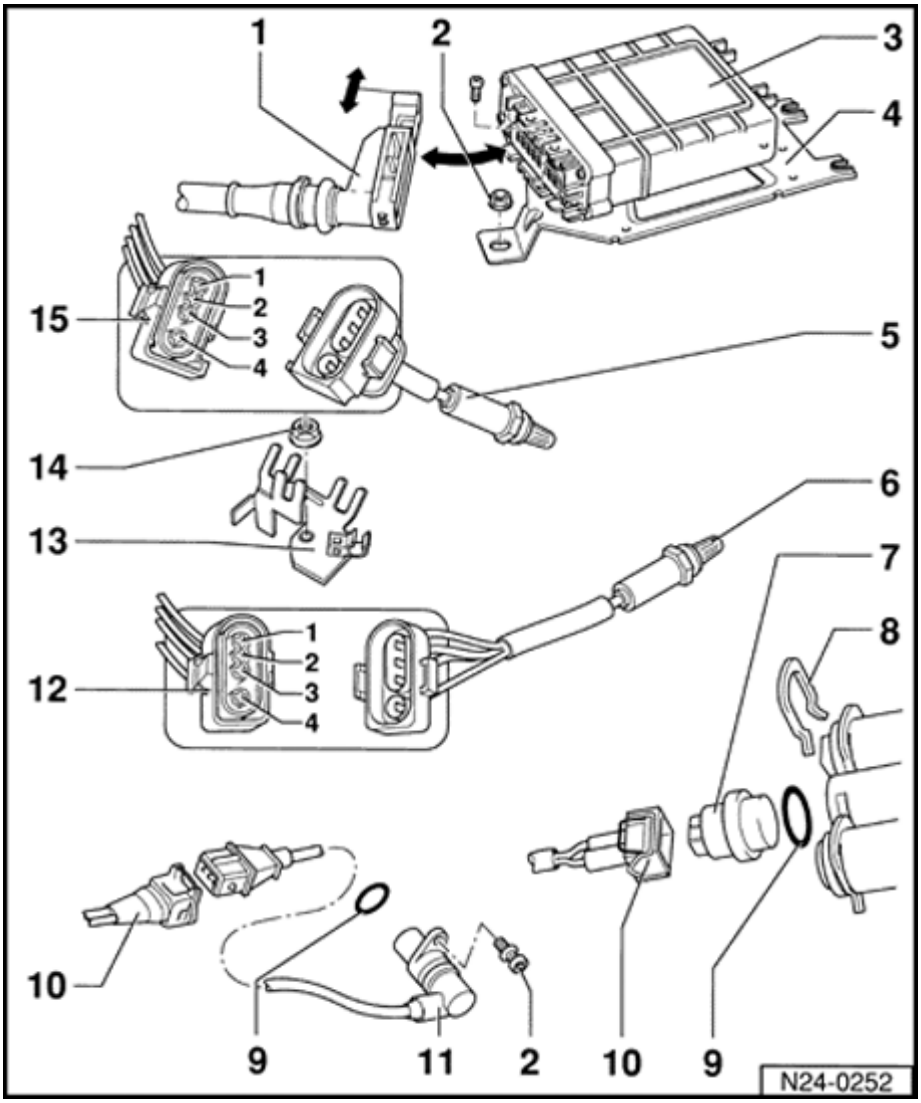

6 - Heated Oxygen Sensor (HO2S) -G39-*

- 50 Nm (37 ft lb)
- Installation position: before three way catalytic converter
- Only grease threads with "G5"; "G5" must not get into the slots on the HO2S body
- Checking HO2S and O2S control (before three way catalytic converter) ⇒ Page 24-25
- O2S heating voltage supply via Fuel Pump (FP) relay -J17-
- Checking O2S heating (before three way catalytic converter) ⇒ Page 24-35

7 - Engine Coolant Temperature (ECT) sensor -G62-*

- Blue, 2-pin
- For ECM
- Checking ⇒ Page 24-88
- If necessary before removing, release pressure from cooling system

8 - Retaining clip

- Check seated securely

9 - O-ring

- Replace if damaged

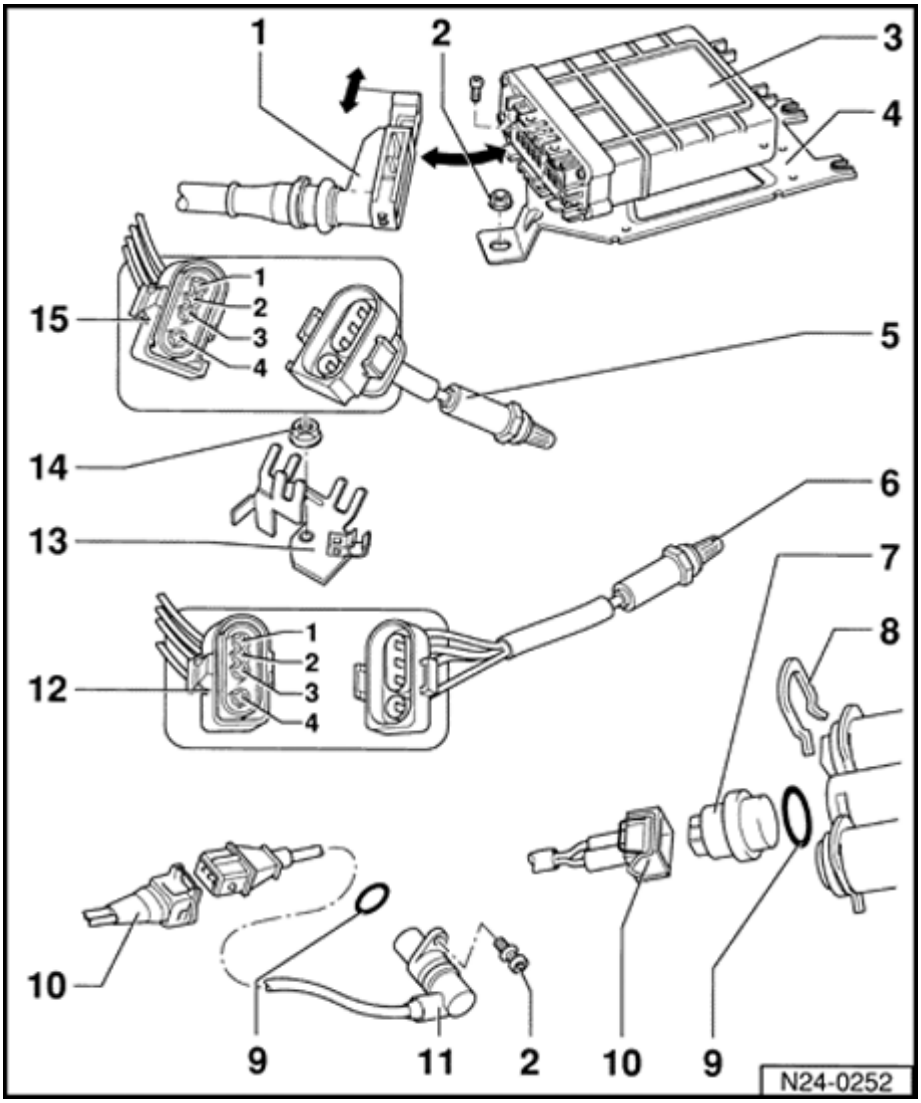

10 - Connector

11 - Engine speed (RPM) sensor -G28-

- Installation position: cylinder block intake side

12 - Connector

- Black, 4-pin
- For HO2S and O2S heating (before three way catalytic converter)
- Secured to rear engine mount

13 - Retainer

- For HO2S, HO2S 2, and Knock Sensor (KS) 1 connectors

14 - 20 Nm (15 ft lb)

15 - Connector

- Brown, 4-pin
- For HO2S and O2S heating (after three way catalytic converter)
- Secured to rear engine mount

24-10

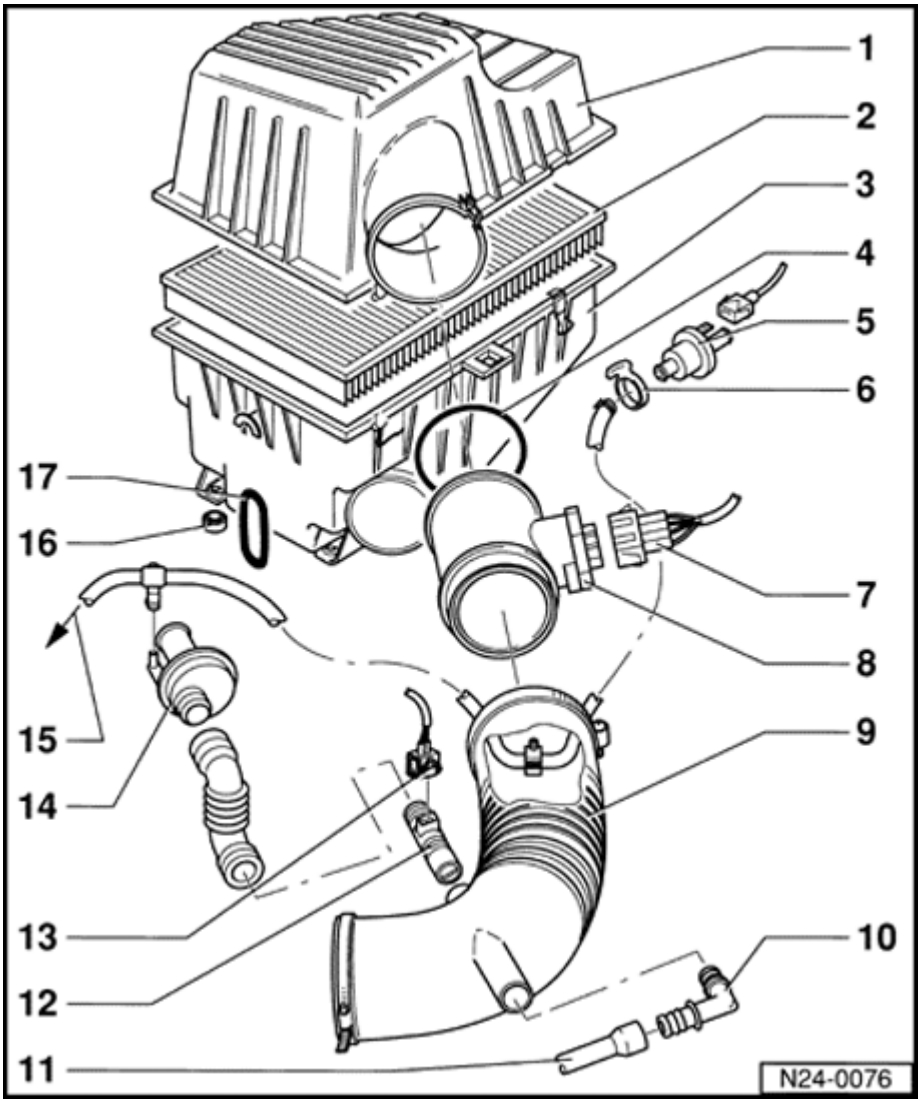

Air cleaner (ACL), Mass Air Flow (MAF) sensor and Positive Crankcase Ventilation (PCV) heating element, removing and installing

1 - Air Cleaner (ACL), upper

2 - Filter element

3 - Air cleaner (ACL), lower

4 - O-ring

- Replace if damaged

5 - Evaporative Emission (EVAP) canister purge regulator valve -N80- */**

- EVAP canister system

⇒ *Repair Manual, 2.8 Liter VR6 2V Engine Mechanical, Engine Code(s): AAA, Repair Group 20*

6 - Retaining ring

- For EVAP canister purge regulator valve

7 - Connector

- 4-pin
- For MAF sensor -G70-

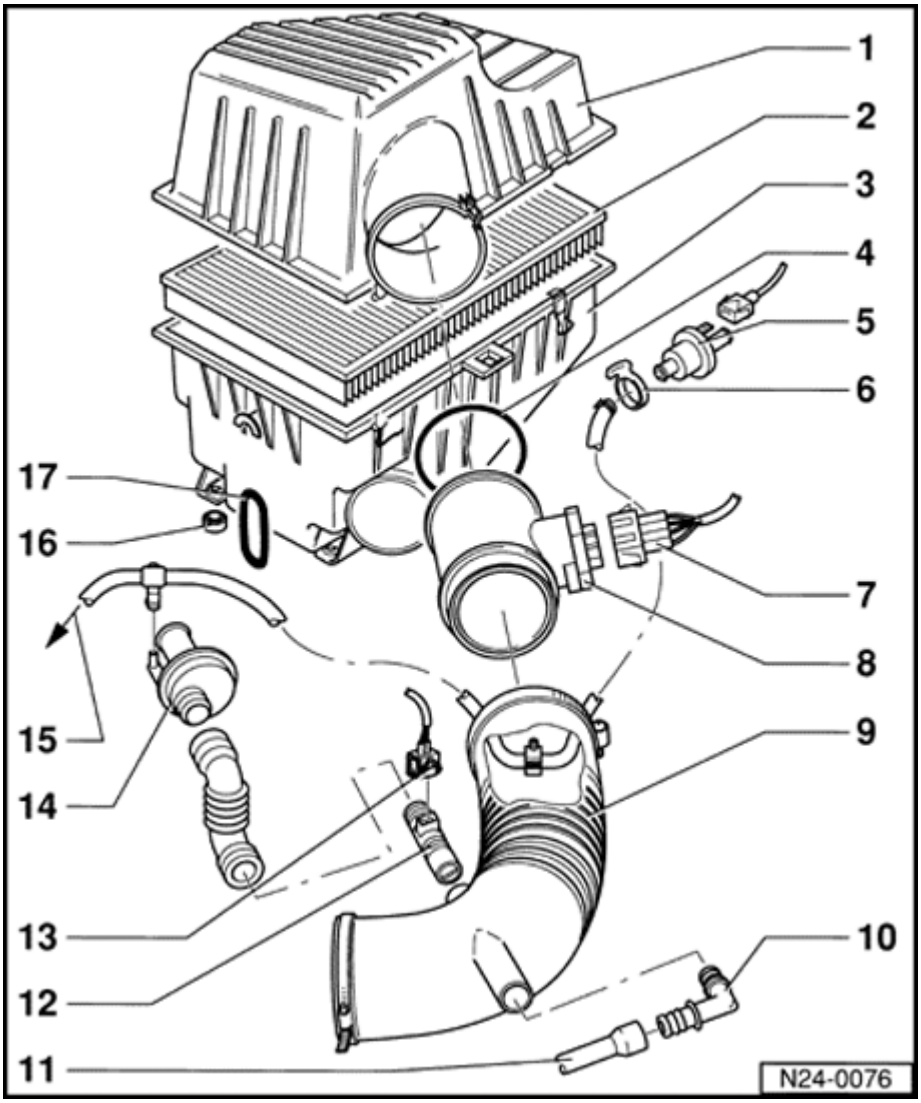

8 - Mass Air Flow (MAF) sensor -G70-*

9 - Intake air duct

10 - Elbow

11 - Hose

12 - Positive Crankcase Ventilation (PCV) heating element -N79-

- Arrow on heater element shows air flow direction
- Resistance at ambient temperature of approx. 25° C (77° F) Specification: 7-12 ohms (W)

13 - Connector

- 2-pin
- For PCV heating element -N79-
- Check O2S heating voltage supply between terminals 1 and 2 with ignition switched on: approx. battery voltage (B+)

14 - Positive Crankcase Ventilation (PCV) valve

15 - To intake manifold, upper

16 - Rubber disc

17 - Retaining ring

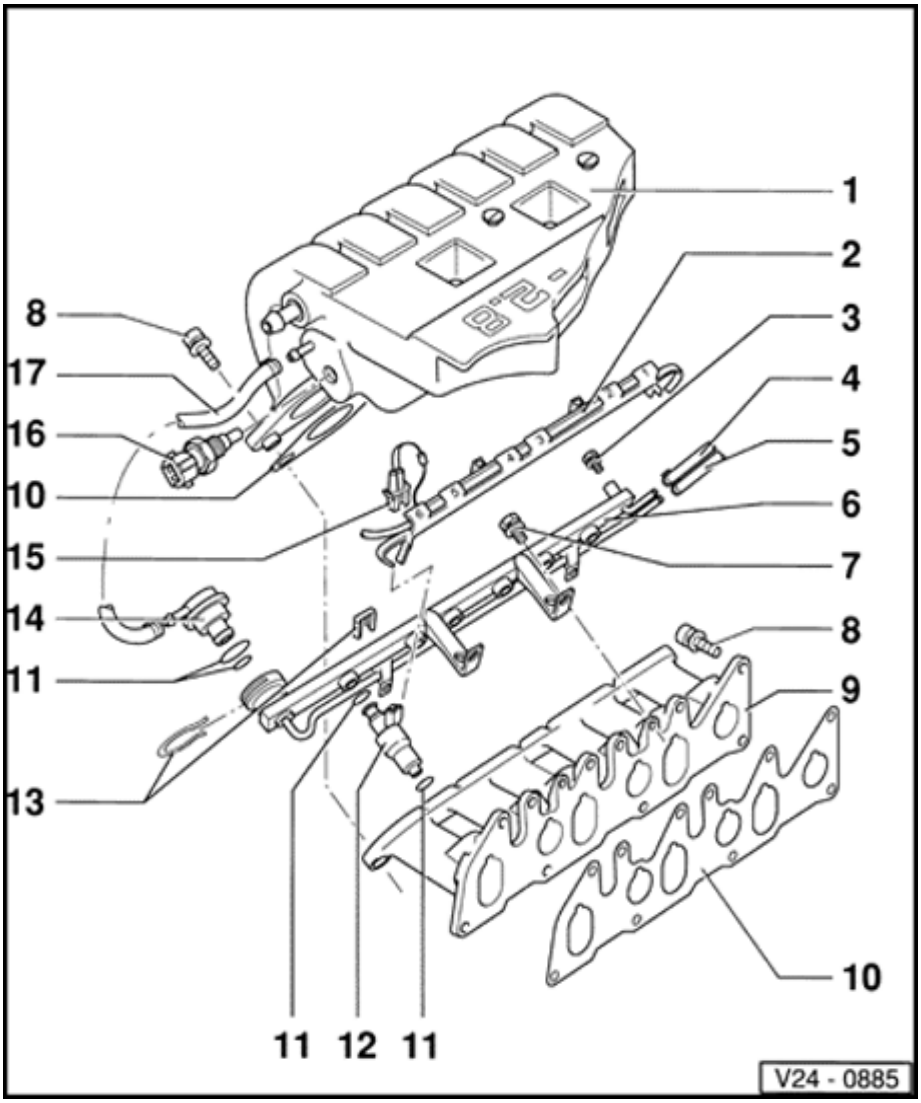

Fuel rail and intake manifold, removing and installing

1 - Intake manifold, upper

2 - Cable duct

3 - Sealing plug

- For test connection

4 - Supply line

- White marking

5 - Return line

- Blue marking

6 - Fuel rail

7 - 10 Nm (7 ft lb)

8 - 25 Nm (18 ft lb)

9 - Intake manifold, lower

10 - Gasket

- Always replace

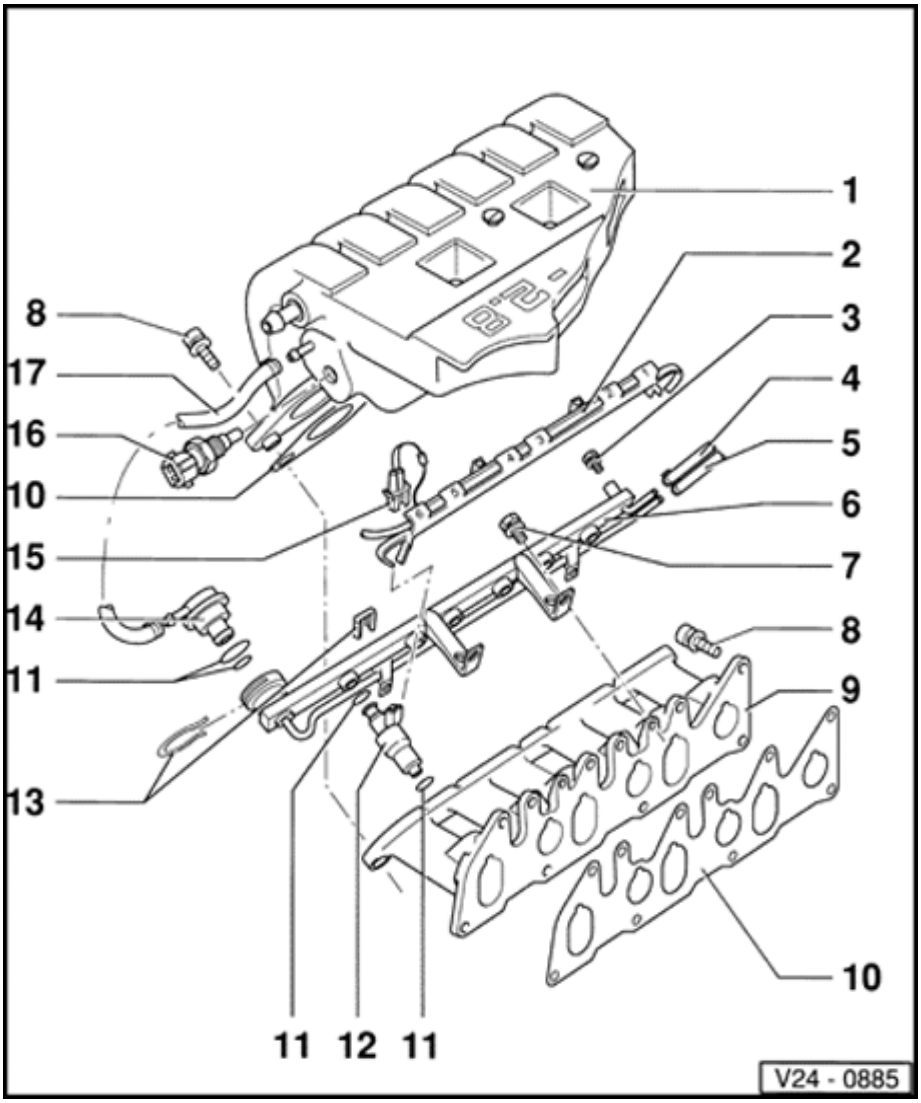

11 - O-ring

- Replace if damaged

12 - Fuel injectors */**

- Cylinder 1 -N30-
- Cylinder 2 -N31-
- Cylinder 3 -N32-
- Cylinder 4 -N33-
- Cylinder 5 -N83-
- Cylinder 6 -N84-
- Checking ⇒ Page 24-115

13 - Retaining clip

- Check securely seated

14 - Fuel pressure regulator

- Checking ⇒ Page 24-120

15 - Connector

- 2-pin
- For fuel injectors, item - 12 -

16 - Intake Air Temperature (IAT) sensor -G72-*

- 10 Nm (7 ft lb)
- Checking ⇒ Page 24-94

17 - Vacuum line

- Replace if damaged
- Check securely seated

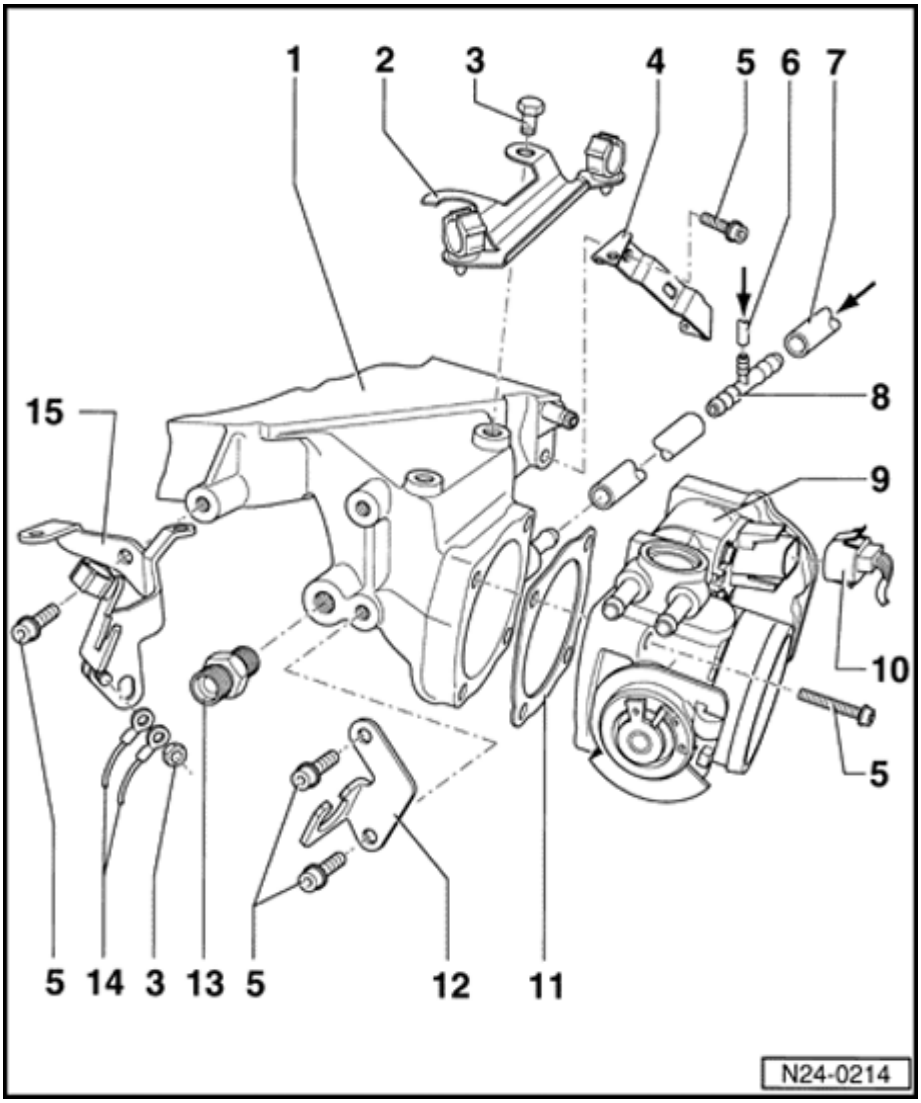

Throttle valve control module, removing and installing

1 - Intake manifold, upper

- First tighten to lower intake manifold and then to both rear supports

2 - Cable duct

3 - 10 Nm (7 ft lb)

4 - Support

- Between intake manifold upper section and cylinder head

5 - 25 Nm (18 ft lb)

6 - Vacuum line

7 - Breather hose

- From Evaporative Emission (EVAP) canister purge regulator valve -N80- ⇒ Page 24-11 , item 15

8 - unction piece

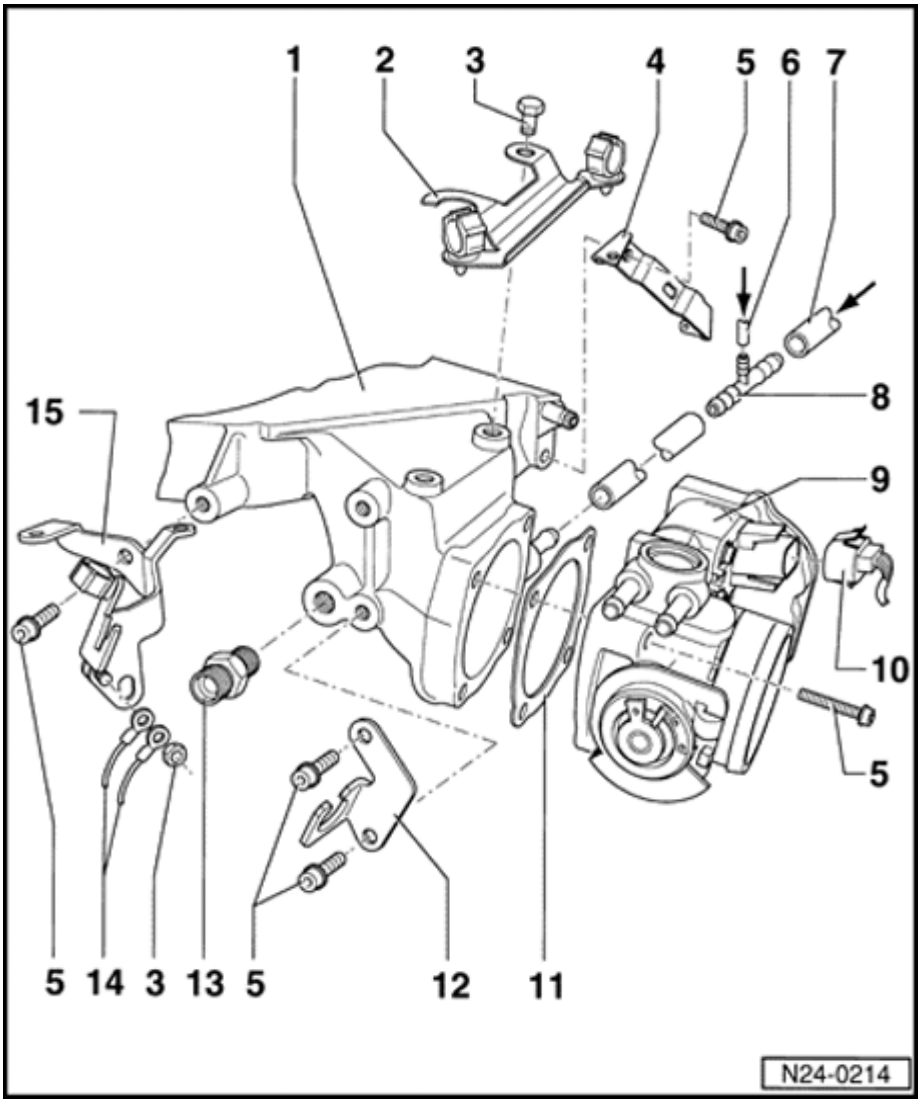

9 - Throttle valve control module - 338-*

- Checking ⇒ Page 24-68
- If replaced, initiate "Basic Setting" function 04 ⇒ Page 24-85

Components of the throttle valve control module -J338-:

- Throttle Position (TP) actuator -V60-
- Throttle Position (TP) sensor -G88-
- Throttle Position (TP) sensor -G69-
- Closed Throttle Position (CTP) switch -F60-

10 - Connector

- 8-pin
- For throttle valve control module -J338-

11 - Gasket

- Always replace

12 - Support bracket

- For accelerator pedal cable
- Adjusting accelerator pedal cable *Repair Manual, 2.8 Liter VR6 2V Engine Mechanical, Engine Code(s): AAA, Repair Group 20*

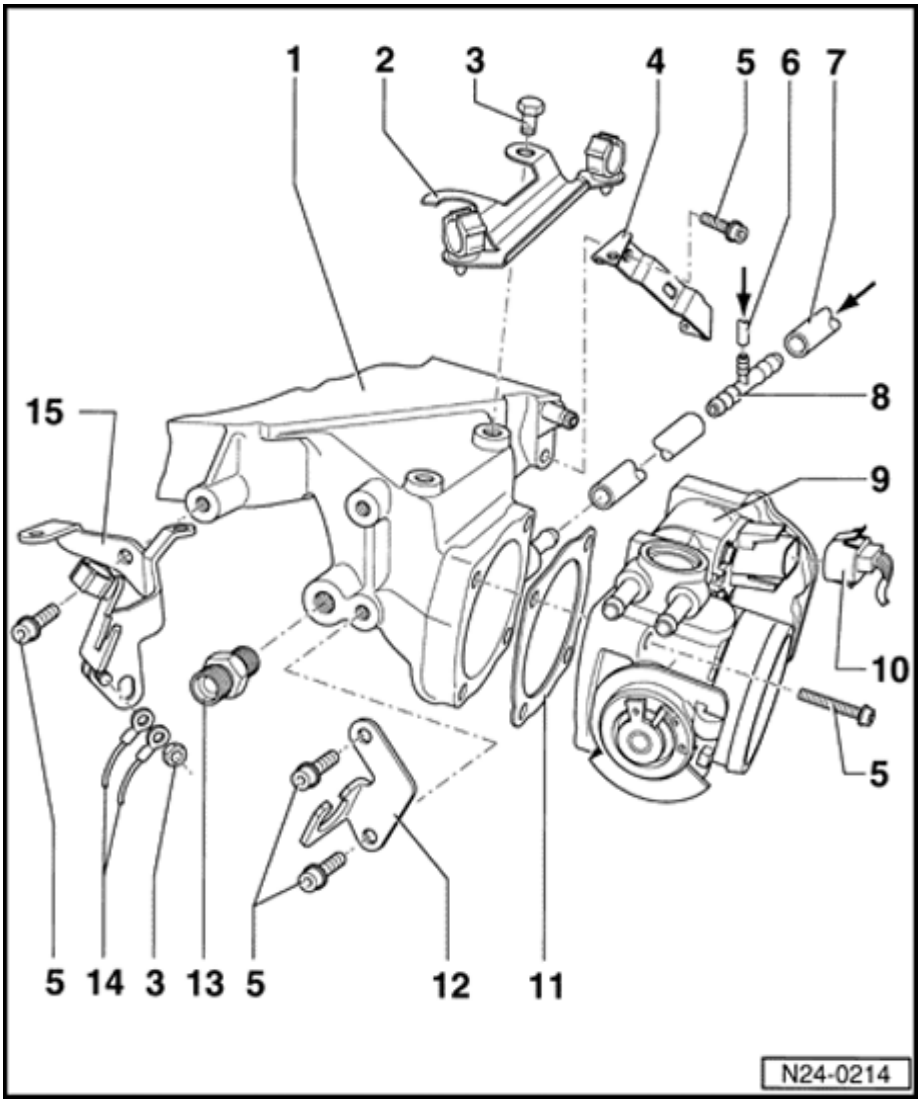

13 - Ground (GND) wires

14 - Left rear support

- Between upper intake manifold and cylinder head
- With engine Ground (GND) connection

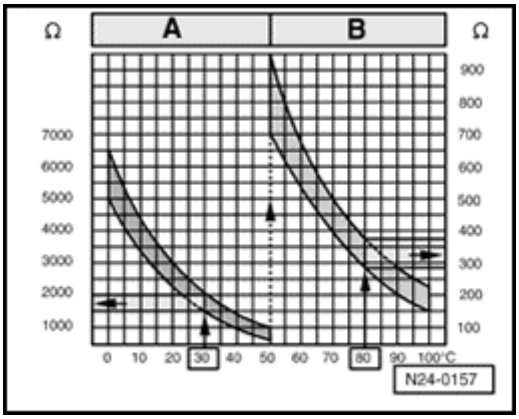

Fig. 1 Resistance graph

The diagram is valid for Engine Coolant Temperature (ECT) sensor -G62- and Intake Air Temperature (IAT) sensor -G72-.

Scale A shows resistance values for temperature range 0°-50°C (32°-122°F) and scale B the values for temperature range 50°-100°C (122°-212°F).

Examples:

- 30°C (86°F) corresponds to a resistance from 1500-2000 ohms (W)
- 80°C (176°F) corresponds to a resistance from 275-375 ohms (W)

Safety precautions

WARNING!

Fuel system is under pressure! Before opening the system place a rag around the connection. Then release pressure by slowly loosening the connection.

Be alert when working on or near the engine. igh ignition secondary voltage can cause serious personal injury and damage vehicle components.

- ***DO NOT touch or disconnect ignition system wires when engine is running or cranked at starting RPM.***
- ***DO NOT operate the starter if the fuel injectors have been removed.***

Be sure the ignition is switched OFF, when:

- ***Disconnecting ignition wires***
- ***Disconnecting fuel injection system wiring***
- ***Connecting or disconnecting test equipment leads***
- ***Disconnecting the battery***
- ***Washing the engine or engine compartment.***

BEFORE cranking the engine at starting RPM (such as for compression testing) disable the ignition and fuel injection systems:

- ***Disconnect the 5-pin connector to ignition coil.***
- ***Disconnect harness connectors from all fuel***

injectors.

- ***After the work is completed, erase Diagnostic Trouble Code (DTC) memory.***

24-19

CAUTION!

BEFORE disconnecting the battery:

- ***Stop the engine.***
- ***Be sure the ignition is switched OFF (also applies when connecting the battery). Failure to do so may damage the Engine Control Module (ECM).***
- ***Be sure of the proper radio code (for vehicles equipped with coded anti-theft radio).***

Be sure the battery negative (-) cable is disconnected, when:

- ***Working on the electrical system***
- ***Resistance (spot) welding or electric arc welding anywhere on the vehicle.***

When connecting and disconnecting electrical test equipment (LED voltage tester, multimeter, etc.):

- ***Be sure the ignition is switched OFF.***
- ***Use correct adapters from the VW 1594 connector test kit.***

For any work affecting the Engine Control Module (ECM):

- ***BEFORE disconnecting the ECM harness connector, switch the ignition OFF and WAIT at least 0 seconds. Failure to do so may damage the ECM.***
- ***DO NOT connect any outside voltage source to stimulate an output signal at the ECM.***

Rules for cleanliness

CAUTION!

Whenever carrying out work on the fuel supply and fuel injection systems, carefully observe the following five rules of cleanliness.

1 - Thoroughly clean fuel system line and hose connections and the surrounding area before disconnecting.

2 - Place removed components on a clean surface and cover. Use plastic sheeting or paper. Do not use fluffy rags that could leave lint!

3 - Carefully cover over or seal any components that have been opened if repairs are not carried out immediately.

4 - Install only clean parts:

Do not remove replacement parts from the packaging until immediately before they are to be installed.

Do not use parts that have been stored without packaging (e.g. in toolboxes, etc.).

5 - When the fuel system is opened:

Avoid working with compressed air whenever possible.

Avoid moving the vehicle if possible.

Technical data

Engine code		AAA
Idle check[1]		
Idle speed [3]	RPM	650 - 750 [2]
Oxygen sensor control factor	%	-5.0 to 5.0 [2] [4]
Engine Control Module (ECM) [5]		
Part number		⇒ Parts catalog
Governed engine speed	RPM	6600

[1] Observe test conditions ⇒ Page 24-22 .

[2] Not adjustable.

[3] If the battery voltage drops below 10.5 volts idle speed will be raised to 900 RPM.

[4] Display fluctuates.

[5] If replaced, initiate "Basic Setting" function 04 ⇒ Page 24-85 .

24-22

Idle speed, checking

- Idle speed, ignition timing and CO content not adjustable
- Idle speed is regulated by the throttle valve control module
- The position of the distributor has no influence on ignition timing
- The CO content is held to specification by the Oxygen Sensor (O2S) control. Malfunctions in O2S control will be detected by the On Board Diagnostic (OBD) program and stored in Diagnostic Trouble Code (DTC) memory

Special tools, testers and auxiliary items

- VAG 1551 scan tool with VAG 1551/3 adapter cable

Test conditions

- No malfunctions stored in DTC memory ⇒ Page 01-12
- Engine oil temperature min. 80 ° C (176 ° F)
- Electrical consumers switched off (radiator coolant fan must not run during the check)
- A/C switched off
- Exhaust system must be free of leaks

24-23

Test sequence

- Engine running at idle

- Connect VAG 1551/1552 scan tool and select "Engine Electronics" address word 01 ⇒ Page 01-7 .

Rapid data transfer **Select function**	**HELP**	⮜	Indicated on display - Press buttons -0- and -4- to select "Basic Setting" function 04 and press -Q- button to confirm input.
Basic Setting **Input display group number**	**HELP**	⮜	Indicated on display - Press buttons -0-, -0- and -1- to input display group 001 and press -Q- button to confirm input.
System in Basic Setting **1 2 3 4**	**1** →	⮜	Indicated on display (1-4 = Display fields)

Note:

In Basic Setting function 04 Evaporative Emission (EVAP) canister purge regulator valve -N80- is closed.

Do not continue with check until engine temperature exceeds 80 ° C (176 ° F), display field 2.

- Briefly increase engine speed (rev-up) and then allow engine to run at idle speed for 2 minutes.
- Check specifications (display fields 1-4).

	Display fields			
	1	2	3	4
Display group 001: Idle test				
Display	**xxxx RPM**	**xxx.x ° C**	**xx.x**	**xx.x ∠ °**
Indicated	**Engine speed**	**Engine coolant temperature**	**Oxygen Sensor (O2S) control**	**Ignition angle**
Working range	**650 - 6000 RPM**	**-**	**-25.0 to 25.0**	**0.0 - 40.0 ∠ °**
Specification	**650 - 750 RPM**	**80.0 - 105.0 ° C**	**Must fluctuate by at least 2 in the range - 5.0 to 5.0**	**2.0 - 15.0 ∠ °**
	If specification is not attained ⇒ Page 24-68 , check throttle valve control module	**-**	**If specification is not attained ⇒ Page 24-25 , check HO2S and O2S control (before three way catalytic converter)**	**If specification is not attained ⇒ Page 28-8 , check ignition timing**

- Press → button.

- Press buttons -0- and -6- to select "End Output" function 06 and press -Q- button to confirm input.

- Perform road test and repeat the check.

- Read the readiness code ⇒ Page 01-31 . If DTC memory has been erased, verify repair via appropriate display group ⇒ Page 01-33 , Readiness code, creating.

24-25

Heated Oxygen Sensor (HO2S) and Oxygen Sensor (O2S) control, checking (before three way catalytic converter)

Special tools, testers and auxiliary items

- VAG 1551/1552 scan tool with VAG 1551/3 adapter cable
- VAG 1598/18 test box
- Multimeter (Fluke 83 or equivalent)
- Connector test kit VW 1594
- Wiring diagram

Test conditions

- Coolant temperature at least 80 ° C (176 ° F)

Functional check

- Engine running at idle

- Connect VAG 1551/1552 scan tool and select "Engine Electronics" address word 01 ⇒ Page 01-7 .

Rapid data transfer **Select function**	**HELP**	≺	Indicated on display

- Press buttons -0- and -8- to select "Read Measuring Value Block" function 08 and press -Q- button to confirm input.

24-26

Read Measuring Value Block HELP

Input display group number

Indicated on display

- Press buttons -0-, -2- and -5- to input display group 025 and press -Q- button to confirm input.

Read Measuring Value Block 25 →

1 2 3 4

Indicated on display (1-4 = Display fields)

- Check specifications for O2S control before three way catalytic converter (display fields 1-3).

	Display fields			
	1	2	3	4
Display group 025: Oxygen Sensor (O2S) control before Three Way Catalytic Converter (TWC)				
Display	**xx.x**	**xx.x**	**xx.x**	xxx ms
Indicated	**O2S control**	**Partial load adaption value**	**Idle adaptation value**	O2S control status (before TWC)
Working range	**-25.0 to 25.0**	**-16.4 to 16.4**	**-16.4 to 16.4**	-
Specification	**The value must fluctuate at least 2 within range -5.0 to 5.0**	**-5.0 to 5.0 (can fluctuate slightly)**	**-5.0 to 5.0 (can fluctuate slightly)**	Relevance ⇒ Page 24-31
	If specification is not attained ⇒ Page 24-27 , continuation	**If specification is not attained ⇒ Page 24-29 , evaluating display group 025**		-

24-27

Continuation

If the specification in display field 1 is not attained, or the value does not fluctuate at least 2%:

- Perform a test drive to remove possible residue on HO2S and repeat check.

If the the specification in display field 1 is not attained even after a road test, or the value does not fluctuate at least 2%:

- Check the O2S heating ⇒ Page 24-35 .

If the value displayed in display field 1 remains constant:

- Press -C- button.

- Press buttons -1-, -1- and -5- to input display group 115 and press -Q- button to confirm input.

Read Measuring Value Block 115 →

1 2 3 4

Indicated on display (1-4 = Display fields)

- Note HO2S voltage in display field 3.

24-28

	Display fields			
	1	2	3	4
Display group 115: Heated Oxygen Sensor (HO2S) before Three Way Catalytic Converter (TWC)				
Display	xxx.x° C	xxx.x° C	**x.xxx V**	xxxxxxxx
Indicated	Coolant temperature	Exhaust gas temperature (calculated)	**HO2S voltage (before TWC)**	O2S control status (before TWC)
Working range	-46.5 to 141.0° C	0.0 - 999.9° C	**0.000 - 1.000 V**	-
Specification	80.0 - 105.0 ° C	min.140.0° C	**The voltage must fluctuate at least 0.3 V at least 30 times per minute in the range 0.000 - 1.000 V**	Relevance ⇒ Page 24-31
	-	-	**If specification is not attained ⇒ Page 24-30 , evaluating display group 115**	-

- Press → button.
- Press buttons -0- and -6- to select "End Output" function 06 and press -Q- button to confirm input.
- Switch ignition off.

Evaluating display group 025

Display group: 025 Display field: 2 3	Possible malfunction cause	Malfunction elimination
Adaption values in range: -5 to -16.4%	♦ Crankcase dilution: When the partial load adaptation value (display field 2) is normal	- Oil change or a fast drive on country roads
	♦ Fuel pressure too high	- Check fuel pressure regulator ⇒ Page 24-120
	♦ Fuel injector leaking	- Check fuel injectors ⇒ Page 24-115
	♦ O2S heating	- Check O2S heating ⇒ Page 24-35
Adaptation values in range: 5 to 16.4%	♦ Unmetered air in air intake system or exhaust manifold/front pipe: When the partial load adaptation value (display field 2) is normal	- Check intake air system for leaks (unmetered air) ⇒ Page 24-123 - Check exhaust system: ⇒ *Repair Manual, 2.8 Liter VR6 2V Engine Mechanical, Engine Code(s): AAA, Repair Group 26*
	♦ Fuel pressure too low	- Check fuel pressure regulator ⇒ Page 24-120
	♦ Check O2S heating	- Check O2S heating ⇒ Page 24-35
	♦ Fuel injector not opening or only partly opening	- Check fuel injectors ⇒ Page 24-115
Adaptation values: constant 0.0%	♦ O2S adaptation not active	- Check whether O2S adaptation is active ⇒ Page 24-31 , O2S control status If O2S control adaption is not active: - Check Mass Air Flow (MAF) sensor ⇒ Page 24-62

Evaluating display group 115

Display group: 115 Display field: 3	Possible malfunction cause	Malfunction elimination
Approx. 0.435 V	♦ Open circuit in wire 4 between HO2S and Engine Control Module (ECM)	- Check basic voltage ⇒ Page 24-32
Approx. 0.440 V	♦ Open circuit in wire 3 between HO2S and ECM	
Approx. 1.085 V	♦ Short circuit to positive (B+) in wire 4 between HO2S and ECM	- Check HO2S wiring ⇒ Page 24-33
Approx. 0.000 V	♦ Short circuit to Ground (GND) in wire 4 between HO2S and ECM	

24-31

Relevance of values in 8-digit number block

Relevance when display 1									
x	**x**	**x**	**x**	**x**	**x**	**x**	**x**	**Oxygen Sensor (O2S) control status (display group 025)**	**O2S control status (display group 115)**
							1	HO2S ready (before TWC)	Malfunction in DTC memory
						1		HO2S ready (after TWC)	Malfunction detected during this diagnosis
					1			O2S control active (before TWC)	Diagnosis completed during this drive
				1				O2S adaptation active	Diagnosis currently active
			1					Not relevant	O2S control active (before TWC)
		1						HO2S voltage initial sign	HO2S ready (before TWC)
	1							Not relevant	Both HO2S cold
1								1 = O2S control regulating frequency rich 0 = O2S control regulating frequency lean	O2S heating on (before TWC)

Checking basic voltage

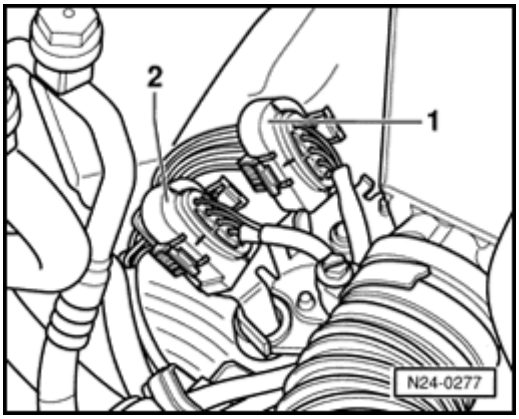

- Disconnect 4-pin connector -1- (black) to HO2S -G39- (before three way catalytic converter).

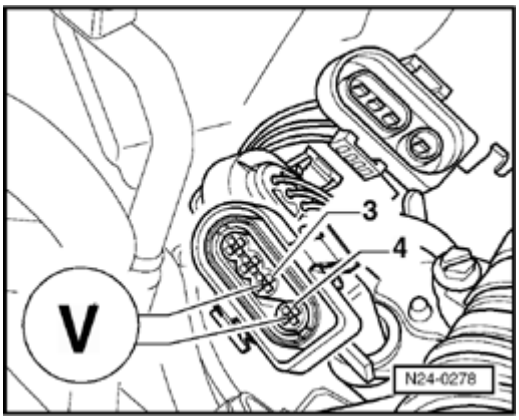

- Connect multimeter with test leads from VW 1594 to measure voltage at ECM connector terminals 3 and 4.
- Start engine and measure basic voltage.

  Specification: 0.40-0.50 volts
- Switch ignition off.

If the specification is not attained:

- Check HO2S wiring ⇒ Page 24-33 .

If the specification is attained:

- Replace HO2S -G39- (before three way catalytic converter).

24-33

Checking HO2S wiring

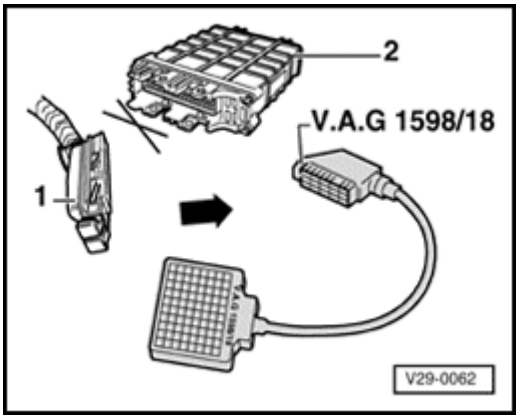

- Connect VAG 1598/18 test box to ECM wiring harness (arrow).

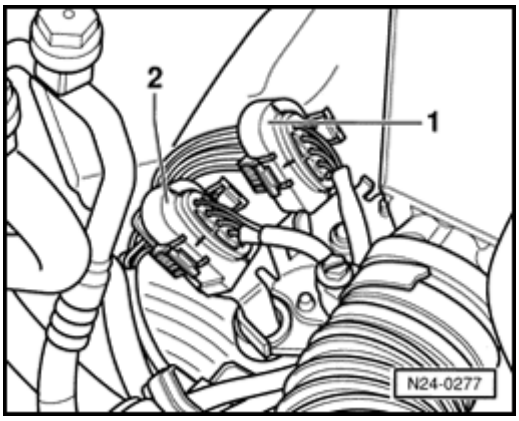

- Disconnect 4-pin connector -1- (black) to HO2S - G39- (before three way catalytic converter).

24-34

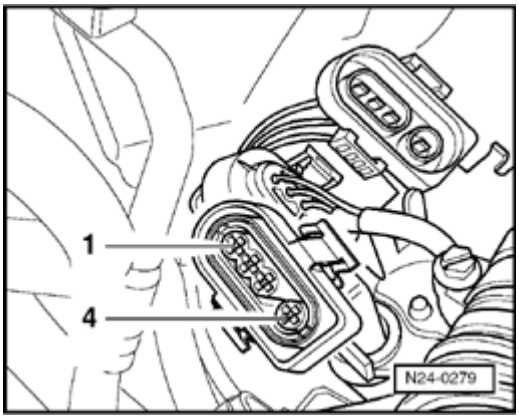

- Check wiring between test box and 4-pin connector to ECM for open circuit according to wiring diagram.
  - Terminal 3 and test box socket 42
  - Terminal 4 and test box socket 20

  Resistance: max. 1.5 ohms (W)
- Additionally, check wiring at 4-pin connector for short circuit to one another.

  Terminal 4 and test box socket 42

  Specification: ∞ ohms (W)
- Check shielding for short circuit to HO2S wiring according to wiring diagram.
  - Terminal 4 and test box socket 56
  - Terminal 3 and test box socket 56

  Specification: ∞ ohms (W)

If no wiring malfunction is detected:

- Replace ECM -J220-.
- Read the readiness code ⇒ Page 01-31 . If DTC memory has been erased, verify repair via appropriate display group ⇒ Page 01-33 , Readiness code, creating.

24-35

Oxygen Sensor (O2S) heating, checking (before three way catalytic converter)

Special tools, testers and auxiliary items

- VAG 1551/1552 scan tool with VAG 1551/3 adapter cable
- VAG 1598/18 test box
- Multimeter (Fluke 83 or equivalent)
- Connector test kit VW 1594
- Wiring diagram

Test conditions

- Fuse 18 OK

Test sequence

- Engine running at idle

- Connect VAG 1551/1552 scan tool and select "Engine Electronics" address word 01 ⇒ Page 01-7 .

Rapid data transfer **Select function**	**HELP**	≺	Indicated on display

- Press buttons -0- and -8- to select "Read Measuring Value Block" function 08 and press -Q- button to confirm input.

24-36

Read Measuring Value Block HELP

Input display group number

Indicated on display

- Press buttons -1-, -2- and -0- to input display group 120 and press -Q- button to confirm input.

Read Measuring Value Block 120 →

1 2 3 4

Indicated on display (1-4 = Display fields)

- Check the resistance value for O2S heating before three way catalytic converter (display field 3).

	Display fields			
	1	2	3	4
Display group 120: Oxygen Sensor (O2S) heating before Three Way Catalytic Converter (TWC)				
Display	xxx.x ° C	xxx.xx sec.	**xx.x Ω**	xxxxxxxx
Indicated	Exhaust gas temperature	Time to start of diagnosis after heating on	**O2S heating resistance (before TWC)**	O2S control status (before TWC)
Working range	0.0 - 999.9 ° C	0.00 - 500.00 sec.	**0.0 - 65.0 Ω**	Relevance ⇒ Page 24-37
Specification	-	100.00 - 200.00 sec.	**5.9 - 24.2 Ω**	
	-	-	**If specification is not attained ⇒ Page 24-38 , continuation**	-

24-37

- Press → button.

- Press buttons -0- and -6- to select "End Output" function 06 and press -Q- button to confirm input.

- Switch ignition off.

Relevance of values in 8-digit number block

Relevance if display 1								
x	**x**	**x**	**x**	**x**	**x**	**x**	**x**	**Oxygen Sensor (O2S) control status (display group 120)**
							1	Malfunction in DTC memory
						1		Malfunction detected during this diagnosis
					1			Diagnosis complete during this drive
				1				Diagnosis currently active
			1					O2S heating ready (before TWC)
		1						HO2S ready (before TWC)
	1							Vapor point exceeded (before TWC)
1								1 = O2S heating on (before TWC) Alternately 0 and 1 = O2S heating is fluctuating

Continuation

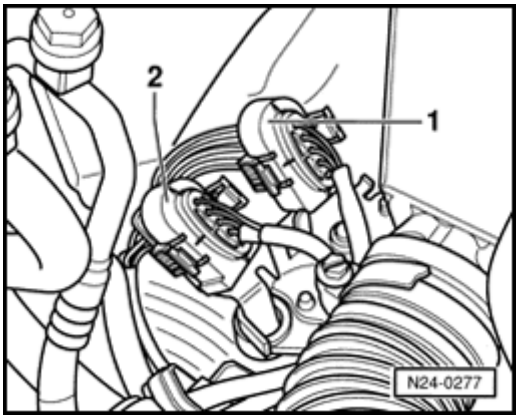

- Disconnect 4-pin connector -1- (black) to HO2S -G39- (before three way catalytic converter).

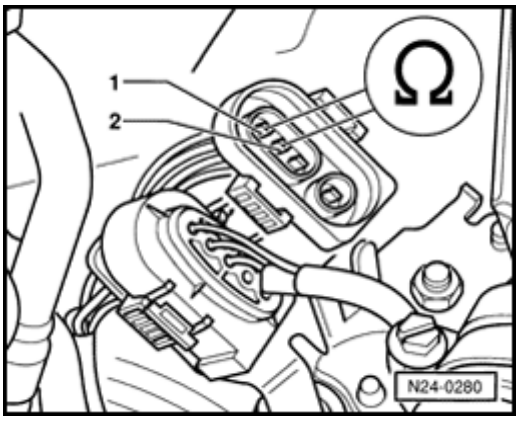

- Connect multimeter with test leads from VW 1594 to measure resistance at HO2S connector terminals 1 and 2.
- Check the resistance value.

  Specification: 0.0-24.2 ohms (W)

If the specification is not attained:

- Replace HO2S -G39- (before three way catalytic converter).

If the specification is attained:

- Check relevance table ⇒ Page 24-37 for value of O2S control status, display group 120, display field 4, 1st position from left.

- Set multimeter to voltage measurement range.

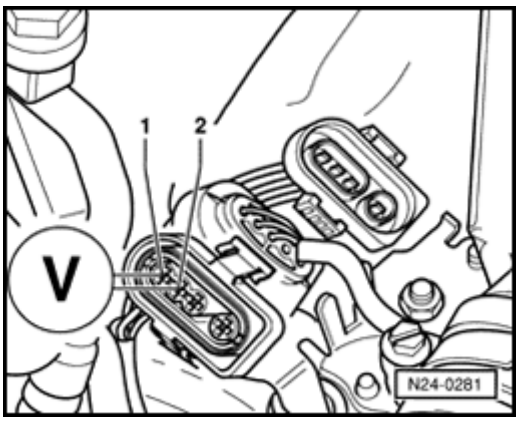

- Connect multimeter using test leads from VW 1594 to measure voltage at ECM connector terminals 1 and 2.
- Measure the voltage supply.

  When display = 1: specification is 11.0-14.5 volts

  When display = alternately 0 and 1: specification is fluctuating between 0.0-12.0 volts

If no voltage is present:

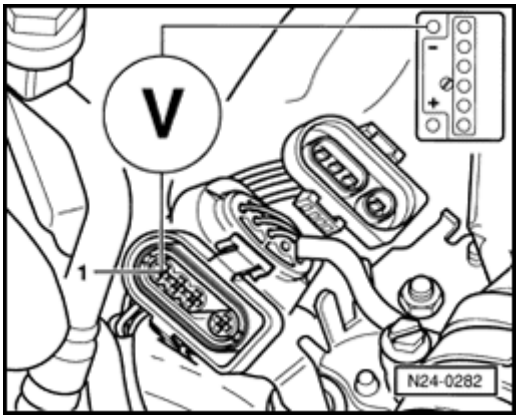

- Connect multimeter with test leads from VW 1594 to measure voltage at ECM connector terminal 1 and vehicle Ground (GND).

  Specification: 11.0-14.5 volts

If again no voltage is present:

- Check wiring from terminal 1 to relay panel according to wiring diagram.

24-40

If voltage was present:

- Check relevance table ⇒ Page 24-37 for value of O2S control status, display group 120, display field 4, 1st position from left.

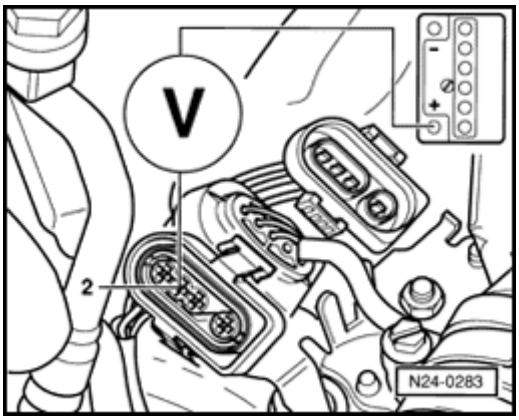

- Connect multimeter using test leads from VW 1594 to ECM connector terminal 2 and battery positive (B+).

  When display = 1: specification is 11.0-14.5 volts.

  When display = alternately 0 and 1: specification is fluctuating between 0.0-12.0 volts

- Switch ignition off.

If no voltage is present:

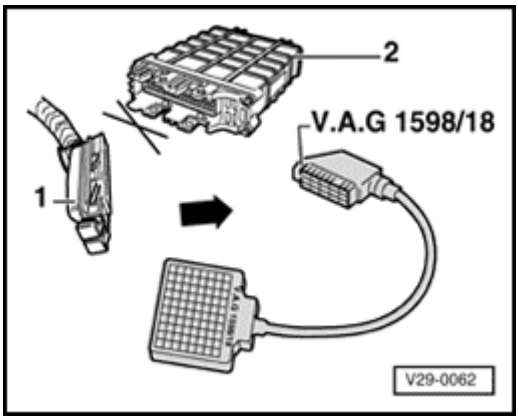

- Connect VAG 1598/18 test box to ECM wiring harness (arrow).

24-41

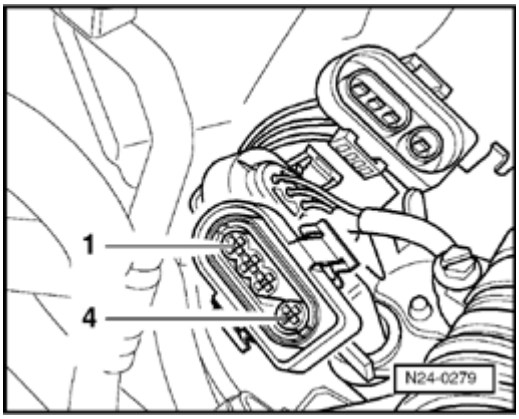

- Check wiring between test box and 4-pin connector for open circuit according to wiring diagram.

  Terminal 2 and test box socket 12

  Resistance: max. 1.5 ohms (W)

If no wiring malfunction is detected:

- Replace Engine Control Module (ECM) -J220-.
- Read the readiness code ⇒ Page 01-31 . If DTC memory has been erased, verify repair via appropriate display group ⇒ Page 01-33 , Readiness code, creating.

24-42

Heated Oxygen Sensor (HO2S) 2 and Oxygen Sensor (O2S) control, checking (after three way catalytic converter)

Special tools, testers and auxiliary items

- VAG 1551/1552 scan tool with VAG 1551/3 adapter cable
- VAG 1598/18 test box
- Multimeter (Fluke 83 or equivalent)
- Connector test kit VW 1594
- Wiring diagram

Test conditions

- Coolant temperature at least 80 ° C (176 ° F)

Functional check

- Engine running at idle

- Connect VAG 1551/1552 scan tool and select "Engine Electronics" address word 01 ⇒ Page 01-7 .

Rapid data transfer **Select function**	**HELP**	≺	Indicated on display

- Press buttons -0- and -8- to select "Read Measuring Value Block" function 08 and press -Q- button to confirm input.

24-43

Read Measuring Value Block HELP

Input display group number

Indicated on display

- Press buttons -1-, -1- and -6- to input display group 116 and press -Q- button to confirm input.

Read Measuring Value Block 116 →

1 2 3 4

Indicated on display (1-4 = Display fields)

- Note HO2S voltage (display field 3).

	Display fields			
	1	2	3	4
Display group 116: Heated Oxygen Sensor (HO2S) 2 after Three Way Catalytic Converter (TWC)				
Display	xxx ms	xxx.x° C	**x.xxx V**	xxxxxxxx
Indicated	Regulating frequency	Exhaust gas temperature (calculated)	**HO2S voltage (after TWC)**	O2S control status (after TWC)
Working range	-	0.0 - 999.9° C	**0.000 - 1.000 V**	-
Specification	-	Min.140.0° C	**0.000 - 1.000 V (can fluctuate marginally)**	Relevance ⇒ Page 24-45
	-	-	**If specification is not attained ⇒ Page 24-44 , continuation**	-

Continuation

- Perform test drive to remove possible residue from HO2S and repeat the check.

If the specification in display field 3 is not attained even after a test drive:

- Check O2S heating ⇒ Page 24-49 .

- Rev-up to above 3000 RPM.

If the value in display field 3 remains constant ⇒ Page 24-44 , evaluating display group 116.

Evaluating display group 116

Display group: 116 **Display field: 3**	**Possible malfunction cause**	**Malfunction elimination**
Approx. 0.435 V	♦ Wiring open circuit in wire 4 between HO2S and ECM.	- Check basic voltage ⇒ Page 24-46
Approx. 0.440 V	♦ Wiring open circuit in wire 3 between HO2S and ECM	
Approx. 1.085 V	♦ Short circuit to positive (B+) in wire 4 between HO2S and ECM	- Check HO2S wiring ⇒ Page 24-47
Approx. 0.000 V	♦ Short circuit to Ground (GND) in wire 4 between HO2S and ECM	

24-45

Relevance of values in 8-digit number block

Relevance if display 1								
x	**x**	**x**	**x**	**x**	**x**	**x**	**x**	**Oxygen Sensor (O2S) control status (display group 116)**
							1	Malfunction in DTC memory
						1		Malfunction detected during this diagnosis
					1			Diagnosis complete during this drive
				1				Diagnosis currently active
			1					O2S control active (before TWC)
		1						HO2S ready (after TWC)
	1							Both HO2S and HO2S 2 cold
1								O2S heating on (after TWC)

Checking basic voltage

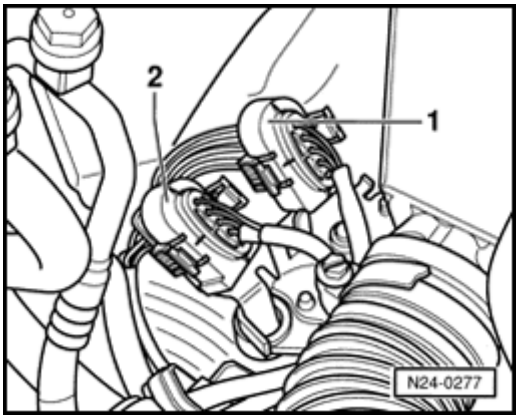

- Disconnect 4-pin connector -2- (brown) to HO2S 2 -G108- (after three way catalytic converter).

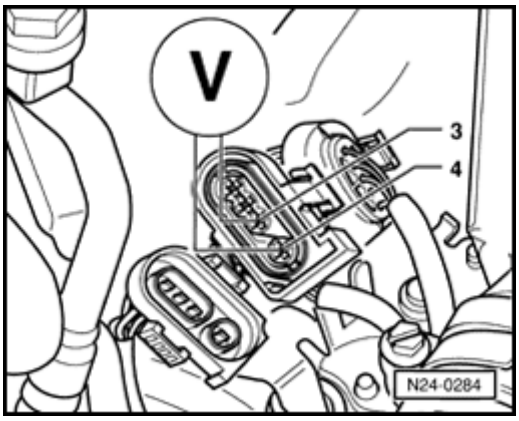

- Connect multimeter using test leads from VW 1594 to measure voltage at ECM connector terminals 3 and 4.
- Start engine and measure basic voltage.

  Specification: 0.40-0.50 volts
- Switch ignition off.

If the specification is not attained:

- Check HO2S wiring ⇒ Page 24-47 .

If the specification is attained:

- Replace Heated Oxygen Sensor (HO2S) 2 -G108- (after three way catalytic converter).

24-47

Checking Heated Oxygen Sensor (HO2S) wiring

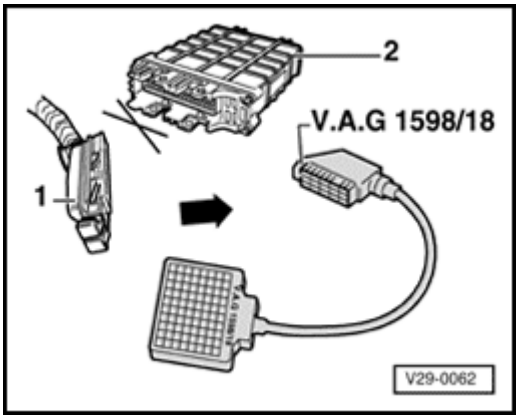

- Connect VAG 1598/18 test box to ECM wiring harness (arrow).

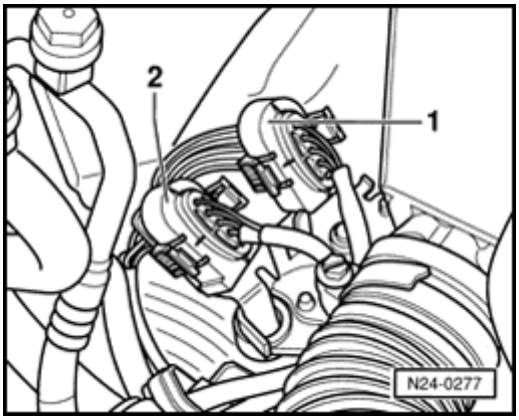

- Disconnect 4-pin connector -2- (brown) to HO2S 2 -G108- (after three way catalytic converter).

24-48

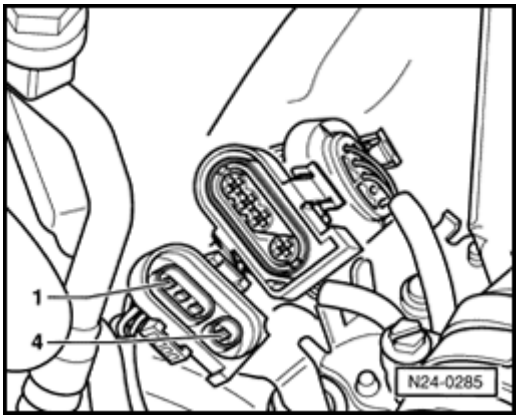

- Check wiring between test box and 4-pin connector to ECM for open circuit according to wiring diagram.
  - Terminal 3 and test box socket 58
  - Terminal 4 and test box socket 13

  Resistance: max. 1.5 ohms (W)
- Additionally, check wiring to 4-pin connector for short circuit to one another.

  Terminal 4 and test box socket 58

  Specification: ∞ ohms (W)

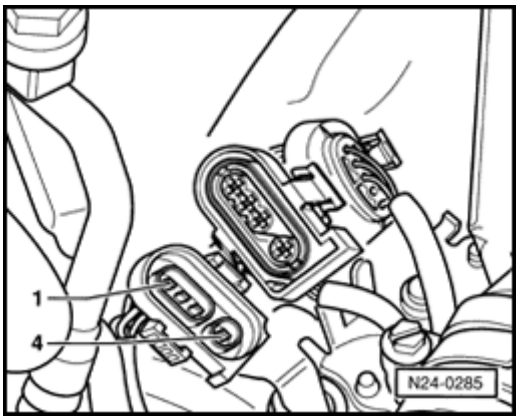

- Check shielding for short circuit to HO2S wiring.
  - Terminal 4 and test box socket 56
  - Terminal 3 and test box socket 56

  Specification: ∞ ohms (W)

If no wiring malfunction is detected:

- Replace Engine Control Module (ECM) -J220-.
- Read the readiness code ⇒ Page 01-31 . If DTC memory has been erased, verify repair via appropriate display group ⇒ Page 01-33 , Readiness code, creating.

24-49

Oxygen Sensor (O2S) heating, checking (after three way catalytic converter)

Special tools, testers and auxiliary items

- VAG 1551/1552 scan tool with VAG 1551/3 adapter cable
- VAG 1598/18 test box
- Multimeter (Fluke 83 or equivalent)
- Connector test kit VW 1594
- Wiring diagram

Test conditions

- Fuse 18 OK

Test sequence

- Connect VAG 1551/1552 scan tool and select "Engine Electronics" address word 01 ⇒ Page 01-7 . When doing this the engine must be running at idle speed.

Rapid data transfer **Select function**	**HELP**	<	Indicated on display

- Press buttons -0- and -8- to select "Read Measuring Value Block" function 08 and press -Q- button to confirm input.

24-50

Read Measuring Value Block HELP

Input display group number

Indicated on display

- Press buttons -1-, -2- and -1- to input display group 121 and press -Q- button to confirm input.

Read Measuring Value Block 121 →

1 2 3 4

Indicated on display (1-4 = Display fields)

- Check resistance value for O2S heating after three way catalytic converter (display field 3).

	Display fields			
	1	2	3	4
Display group 121: Oxygen Sensor (O2S) heating after Three Way Catalytic Converter (TWC)				
Display	xxx.x ° C	xxx.xx sec.	**x.x Ω**	xxxxxxxx
Indicated	Three way catalytic converter temperature	Time from heating on to diagnosis start	**O2S heating resistance (after TWC)**	O2S control status (after TWC)
Working range	0.0 - 999.9 ° C	Approx.150.00 sec.	**0.0 - 65.0 Ω**	Relevance ⇒ Page 24-51
Specification	-	-	**5.9 - 24.2 Ω**	
	-	-	**If specification is not attained ⇒ Page 24-52 , continuation**	-

24-51

- Press → button.

- Press buttons -0- and -6- to select "End Output" function 06 and press -Q- button to confirm input.

- Switch ignition off.

Relevance of values in 8-digit number block

Relevance when display 1								
x	**x**	**x**	**x**	**x**	**x**	**x**	**x**	**Oxygen Sensor (O2S) control status (display group 121)**
							1	Malfunction in DTC memory
						1		Malfunction detected during this diagnosis
					1			Diagnosis complete during this drive
				1				Diagnosis currently active
			1					O2S heating ready (after TWC)
		1						HO2S ready (after TWC)
	1							Vapor point exceeded (after TWC)
1								1 = O2S heating on (after TWC) Alternately 0 and 1 = O2S heating is fluctuating

24-52

Continuation

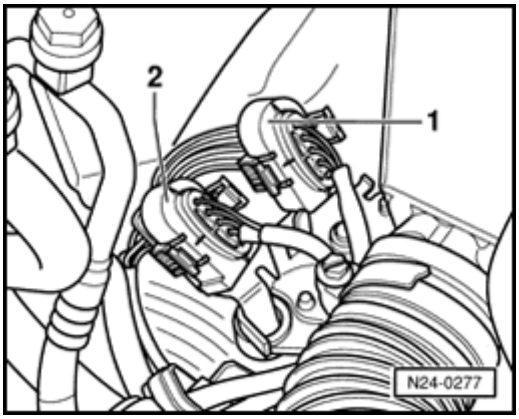

- Disconnect 4-pin connector -2- (brown) to HO2S 2 -G108- (after three way catalytic converter).

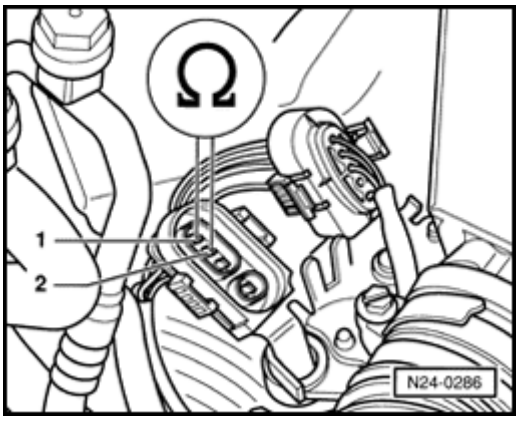

- Connect multimeter with test leads from VW 1594 to measure resistance at terminals 1 and 2 on connector to HO2S.
- Measure the resistance value.

  Specification: 0.00-24.2 ohms (W)

If the specification is not attained:

- Replace Heated Oxygen Sensor (HO2S) 2 -G108- (after three way catalytic converter).

24-53

If the specification is attained:

- Check relevance table ⇒ Page 24-51 for value of O2S control status, display group 121, display field 4, 1st position from left.

- Set multimeter to voltage measurement range.

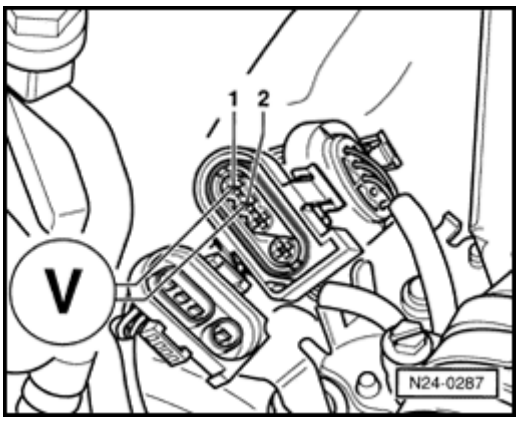

- Connect multimeter with test leads from VW 1594 to measure voltage at ECM connector terminals 1 and 2.
- Measure the voltage supply.

  When display = 1: specification is 11.0-14.5 volts

  When display = alternately 0 and 1: specification is fluctuating between 0.0-12.0 volts

If no voltage is present:

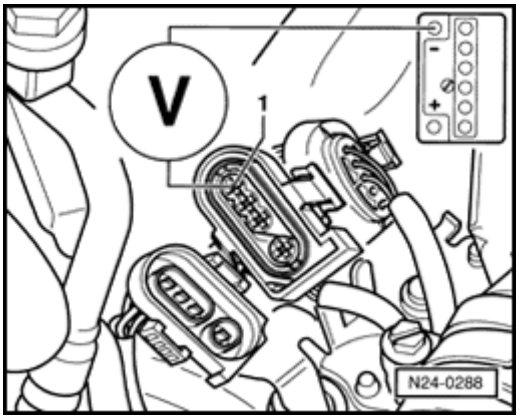

- Connect multimeter using test leads from VW 1594 to measure voltage at ECM connector terminal 1 and vehicle Ground (GND).

  Specification: 11.0-14.5 volts

If again no voltage is present:

- Check wiring from terminal 1 to relay panel according to wiring diagram.

If voltage was present:

- Check relevance table ⇒ Page 24-51 for value of O2S control status, display group 121, display field 4, 1st position from left.

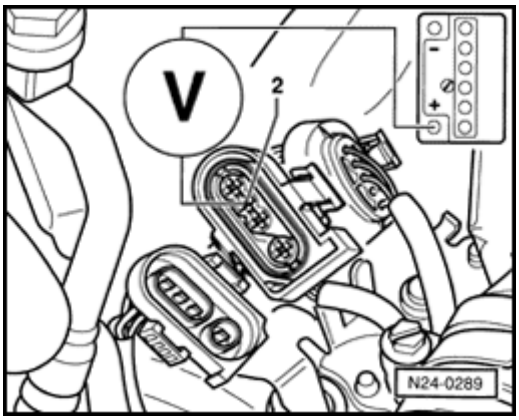

- Connect multimeter with test leads from VW 1594 to ECM connector terminal 2 and battery positive (B+).

  When display = 1: specification is 11.0-14.5 volts

  When display = alternately 0 and 1: specification is fluctuating between 0.0-12.0 volts

- Switch ignition off.

If the specification is not attained:

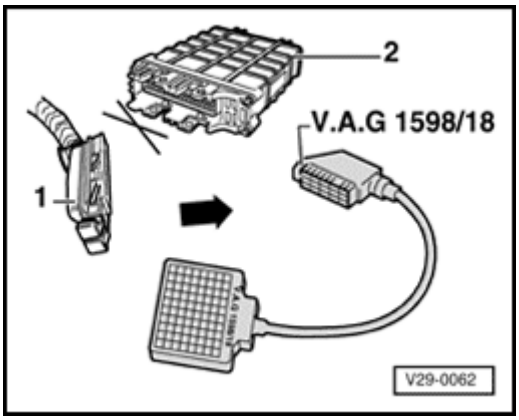

- Connect VAG 1598/18 test box to ECM wiring harness (arrow).

24-55

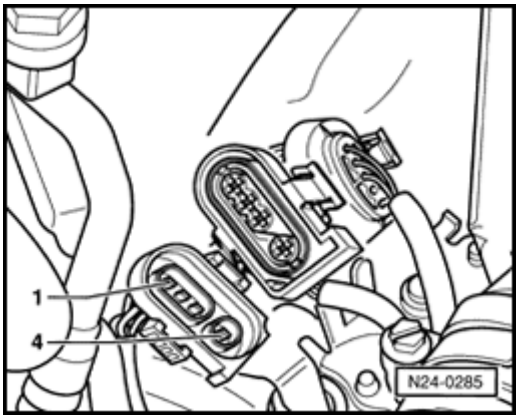

- Check wiring between test box and 4-pin connector for open circuit according to wiring diagram.

  Terminal 2 and test box socket 66

  Resistance: max. 1.5 ohms (W)

If no wiring malfunction is detected:

- Replace Engine Control Module (ECM) -J220-.
- Read the readiness code ⇒ Page 01-31 . If DTC memory has been erased, verify repair via appropriate display group ⇒ Page 01-33 , Readiness code, creating.

24-56

Oxygen Sensor (O2S) aging, checking (before three way catalytic converter)

Special tools, testers and auxiliary items

- VAG 1551/1552 scan tool with VAG 1551/3 adapter cable

Test conditions

- Coolant temperature at least 80 ° C (176 ° F)

Functional check

- Engine running at idle

- Connect VAG 1551/1552 scan tool and select "Engine Electronics" address word 01 ⇒ Page 01-7 .

Rapid data transfer **HELP**
Select function

Indicated on display

- Press buttons -0- and -4- to select "Basic Setting" function 04 and press -Q- button to confirm input.

Basic Setting **HELP**
Input display group number

Indicated on display

- Press buttons -1-, -3- and -0- to input display group 130 and press -Q- button to confirm input.

System in Basic Setting **130** →
1 2 3 4

Indicated on display (1-4 = Display fields)

- Increase engine speed to 2200-2800 RPM and check the specifications for HO2S aging before three way catalytic converter (display field 1-4).

24-57

Note:

So that the exhaust gas temperature is within specification range during the test, the test RPM must be held for at least 1 minute. Observe the O2S control status in display field 4.

	Display fields			
	1	2	3	4
Display group 130: Heated Oxygen Sensor (HO2S) aging (monitoring signal frequency of HO2S)				
Display	**xxxx RPM**	**xx.xx sec.**	**xxx**	**xxxxxxxx**
Indicated	**Engine speed**	**HO2S before three way catalytic converter, signal frequency**	**Valid HO2S signal frequency (counted)**	**O2S control status**
Working range	**650 - 6000 RPM**	**0.00 - 5.00 sec.**	**0 - 4**	**-**
Specification	**2200 - 2800 RPM**	**0.00 - 2.80 sec.**	**4**	**1111x100**
	-	**If specification is not attained ⇒ Page 24-58 , continuation**		**Relevance ⇒ Page 24-59**

- Press -C- button.

- Press buttons -1-, -3- and -1- to input display group 131 and press -Q- button to confirm input.

System in Basic Setting 131 →

1 2 3 4

Indicated on display (1-4 = Display fields)

- Run engine at idle speed and check specifications.

	Display fields			
	1	2	3	4
Display group 131: Heated Oxygen Sensor (HO2S) aging, (O2S) control signal frequency extended				
Display	xxxx RPM	xx.xxx V	xxx ms	xxxxxxxx
Indicated	Engine speed	HO2S voltage after three way catalytic converter	Signal frequency extended	O2S control status
Working range	650 - 6000 RPM	0.000 - 1.000 V	-	-
Specification	2200 - 2800 RPM	0.500 - 0.700 V (can fluctuate marginally)	-1200 to 1200 ms	1111x100
	-	If specification is not attained ⇒ Page 24-58 , continuation		Relevance ⇒ Page 24-59

Continuation

If specification is not attained:

- Perform a road test to clear HO2S of possible residue and repeat the test.

24-59

If the specification is again not attained:

- Replace HO2S -G39- (before three way catalytic converter).

- Read the readiness code ⇒ Page 01-31 . If DTC memory has been erased, verify repair via appropriate display group ⇒ Page 01-33 , Readiness code, creating.

Relevance of values in 8-digit number block

Relevance when display 1									
x	**x**	**x**	**x**	**x**	**x**	**x**	**x**	**O2S control status (display group 130)**	**O2S control status (display group 131)**
							1	Malfunction in DTC memory	Malfunction in DTC memory
						1		Malfunctions detected during this diagnosis	Malfunctions recognized during this diagnosis
					1			Diagnosis completed during this drive	Diagnosis completed during this drive
				1				Diagnosis currently active	Diagnosis currently active
			1					Diagnosis O2S heating ready (before TWC)	O2S control active (before TWC)
		1						Three way catalytic converter temperature within specified range	O2S control active (after TWC)
	1							Engine speed and load within specified range	Engine speed and load within specified range
1								O2S control active (before TWC)	Three way catalytic converter temperature within specified range

24-60

Engine operation, checking

Note:

Check establishes whether Engine Control Module (ECM) -J220- recognizes the engine operating condition.

Special tools, testers and auxiliary items

- VAG 1551/1552 scan tool with VAG 1551/3 adapter cable

Test conditions

- Engine oil temperature min. 80 ° C (176 ° F)

Test sequence

- Engine running at idle

- Connect VAG 1551/1552 scan tool and select "Engine Electronics" address word 01 ⇒ Page 01-7 .

Rapid data transfer **Select function**	**HELP**	≺	Indicated on display - Press buttons -0- and -8- to select "Read Measuring Value Block" function 08 and press -Q- button to confirm input.
Read Measuring Value Block **Input display group number**	**HELP**	≺	Indicated on display - Press buttons -0-, -0- and -5- to input display group 005 and press -Q- button to confirm input.

24-61

Read Measuring Value Block **5** →

1 2 3 4

Indicated on display (1-4 = Display fields)

- Check whether the ECM recognizes the operating mode (display field 4).

	Display fields			
	1	2	3	4
Display group 005: General engine data				
Display	xxx RPM	xx.xx ms	xxx km/h	**Idle**
Indicated	Engine speed	Engine load	Vehicle speed	**Operating mode**
Working range	650 - 6000 RPM	0.00 - 25.00 ms	-	**-**
Specification	650 - 750 RPM	-	0 km/h	♦ Idle = Idle ♦ Partial load = Throttle valve slightly open ♦ Enrich. = Rev-up above 3000 RPM; Then overrun = Close throttle valve abruptly ♦ Full load = Only possible when driving

If the specifications are not attained:

- Check accelerator mechanism for ease of operation.
- Checking throttle valve control module ⇒ Page 24-68 .

24-62

Mass Air Flow (MAF) sensor, checking

Special tools, testers and auxiliary items

- VAG 1551/1552 scan tool with VAG 1551/3 adapter cable
- VAG 1598/18 test box
- Multimeter (Fluke 83 or equivalent)
- Connector test kit VW 1594
- Wiring diagram

Test conditions

- Electrical consumers switched off (radiator coolant fan must not run during the check)
- A/C switched off

Test sequence

- Engine running at idle

- Connect VAG 1551/1552 scan tool and select "Engine Electronics" address word 01 ⇒ Page 01-7 .

Rapid data transfer **Select function**	**HELP**	≺	Indicated on display

- Press buttons -0- and -8- to select "Read Measuring Value Block" function 08 and press -Q- button to confirm input.

24-63

Read Measuring Value Block HELP

Input display group number

Indicated on display

- Press buttons -0-, -1- and -5- to input display group 015 and press -Q- button to confirm input.

Read Measuring Value Block 15 →

1 2 3 4

Indicated on display (1-4 = Display fields)

- Check load registration specifications 1 (display fields 2 and 3).

	Display fields			
	1	2	3	4
Display group 015: Load registration 1				
Display	xxx RPM	**xx.xx ms**	**xx**	xx.x g/s
Indicated	Engine speed	**Engine load**	**Engine load**	Mass air flow
Working range	650 - 6000 RPM	**0.00 - 25.00 ms**	**0 - 40**	-
Specification	650 - 750 RPM	**1.00 - 3.00 ms**	**10 - 30**	3.0 - 4.0 g/s
	-	**If specification is not attained ⇒ Page 24-65 , check voltage supply and ⇒ Page 24-66 , check wiring**		-

- Press -C- button.

- Press buttons -0-, -1- and -6- to input display group 016 and press -Q- button to confirm input.

Read Measuring Value Block 16 →

1 2 3 4

Indicated on display (1-4 = Display fields)

- Check load registration specifications 2 (display field 3).

	Display fields			
	1	2	3	4
Display group 016: Load registration 2				
Display	xxx RPM	xx.xx ms	**xx.xx ms**	xx.xx ms
Indicated	Engine speed	Engine load	**Engine load**	Engine load substitute value from throttle valve angle
Working range	650 - 6000 RPM	0.00 - 25.00 ms	**0 - 25.00 ms**	0.00 - 25.00 ms
Specification	650 - 750 RPM	1.00 - 3.00 ms	**1.00 - 3.00 ms**	1.00 - 3.00 ms
	-	-	**If specification is not attained ⇒ Page 24-65 , evaluating display group 016**	-

Evaluating display group 016

Display group: 016 Display field: 3	Possible malfunction cause	Malfunction elimination
0.00 ms	♦ Wiring open circuit in wire 3 or 4 between MAF sensor and ECM	- Check voltage supply ⇒ Page 24-65 - Check wiring ⇒ Page 24-66
Smallest value: 5.30 ms	♦ Wiring open circuit in wire 1 or 2 between MAF sensor and ECM	

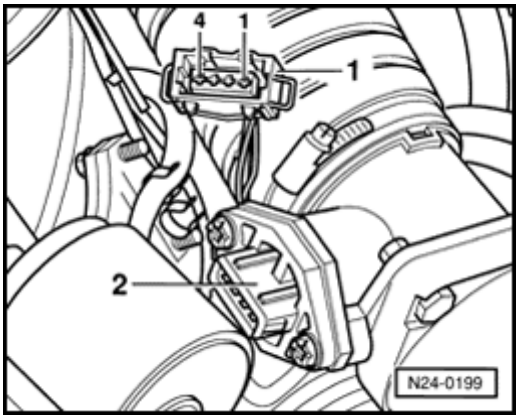

Checking voltage supply

- Disconnect 4-pin connector from Mass Air Flow (MAF) sensor.
- Connect multimeter with test leads from VW 1594 to measure voltage at terminals 1 and 3.

  Specification: 9.0-14.5 volts

If no voltage is present:

- Switch ignition off.
- Check wiring according to wiring diagram.

24-66

Checking wiring

- Switch ignition off.

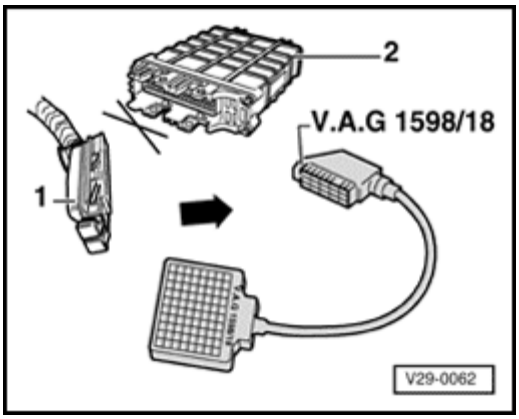

- Connect VAG 1598/18 test box to ECM wiring harness (arrow).

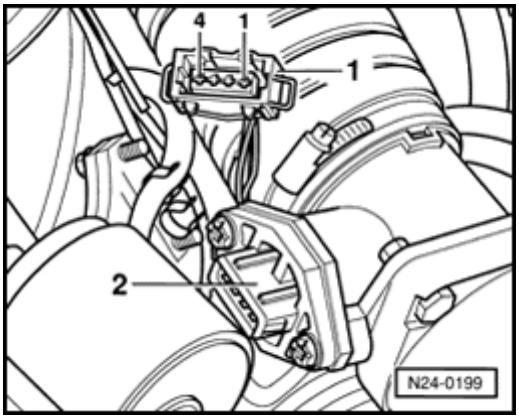

- Check wiring between test box and 4-pin connector for open circuit according to wiring diagram.
  - Terminal 2 and test box socket 16
  - Terminal 4 and test box socket 17

  Resistance: max. 1.5 ohms (W)
- Additionally, check 4-pin connector terminals for short circuit to one another.
  - Terminal 4 and test box socket 16

  Specification: ∞ ohms (W)

24-67

- Set multimeter to voltage measurement range.

- Check 4-pin connector terminals for short circuit to battery positive (B+) according to wiring diagram.

  - Terminal 2 and vehicle Ground (GND)

  - Terminal 4 and vehicle Ground (GND)

  Specification: 0 volts

If no wiring malfunction is detected:

- Replace Mass Air Flow (MAF) sensor -G70-.

- Read the readiness code ⇒ Page 01-31 . If DTC memory has been erased, verify repair via appropriate display group ⇒ Page 01-33 , Readiness code, creating.

Throttle valve control module, checking

Note:

If the throttle valve control module -J338- is removed and installed or replaced, Basic Setting function 04 must be initiated ⇒ *Page 24-85* .

Special tools, testers and auxiliary items

- VAG 1551/1552 scan tool with VAG 1551/3 adapter cable
- VAG 1598/18 test box
- Multimeter (Fluke 83 or equivalent)
- Connector test kit VW 1594
- Wiring diagram

Checking voltage supply

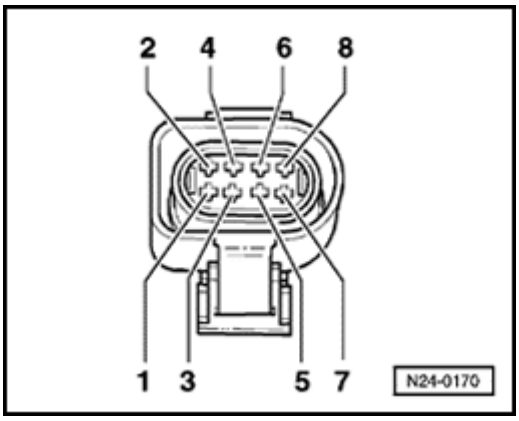

- Separate 8-pin connector to throttle valve control module -J338-.
- Connect multimeter using test leads from VW 1594 to measure voltage at terminals 3 and 7 of connector.
- Switch ignition on.

  Specification: 9.0-14.5 volts

24-69

- Connect multimeter using adapter cables from VW 1594 to measure voltage at terminals 4 and 7 of connector.

  Specification: 4.0-6.0 volts

- Switch ignition off.

If the specifications are not attained:

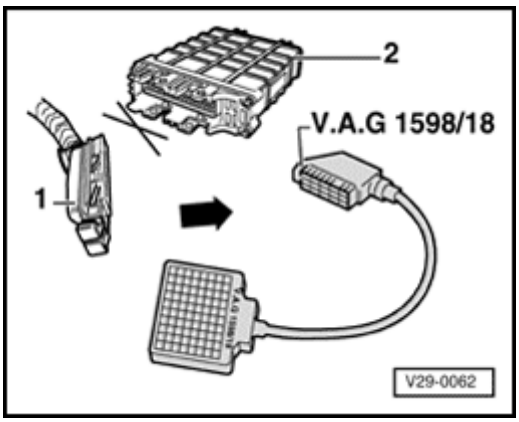

- Connect VAG 1598/18 test box to ECM wiring harness (arrow).

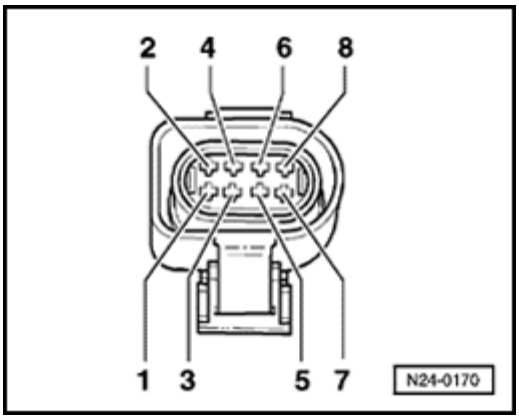

- Check wiring between test box and 8-pin connector for open circuit according to wiring diagram.
  - Terminal 3 and test box socket 10
  - Terminal 4 and test box socket 41
  - Terminal 7 and test box socket 33

  Resistance: max. 1.5 ohms (W)

24-70

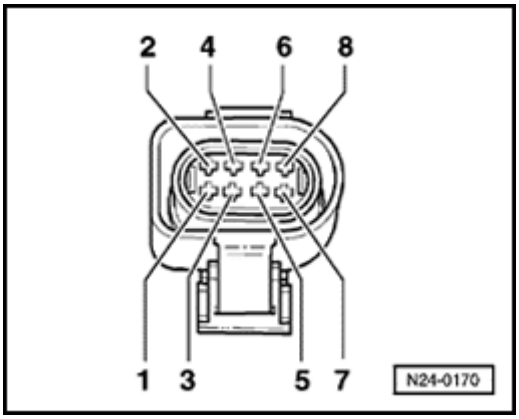

- Check wiring at 8-pin connector for short circuit to each other.
  - Terminal 7 and test box socket 10
  - Terminal 7 and test box socket 41
  - Terminal 4 and test box socket 33

  Specification: ∞ ohms (W)
- Reconnect connector.

If no wiring malfunction is detected:

- Replace Engine Control Module (ECM) -J220-.
- Read the readiness code ⇒ Page 01-31 . If DTC memory has been erased, verify repair via appropriate display group ⇒ Page 01-33 , Readiness code, creating.

Checking Closed Throttle Position (CTP) switch

- Connect VAG 1551/1552 scan tool and select "Engine Electronics" address word 01 ⇒ Page 01-7 . When doing this the engine must be running at idle speed.

Rapid data transfer **Select function**	**HELP**	Indicated on display

- Press buttons -0- and -8- to select "Read Measuring Value Block" function 08 and press -Q- button to confirm input.

24-71

Read Measuring Value Block HELP

Input display group number

Indicated on display

- Press buttons -0-, -0- and -5- to input display group 005 and press -Q- button to confirm input.

Read Measuring Value Block 5 →

1 2 3 4

Indicated on display (1-4 = Display fields)

- Check Closed Throttle Position (CTP) switch (display field 4).

	Display fields			
	1	2	3	4
Display group 005: General engine data				
Display	xxx RPM	xx.xx ms	xxx km/h	**Text**
Indicated	Engine speed	Engine load	Vehicle speed	**Operating modes**
Working range	650 - 6000 RPM	0.00 - 25.00 ms	-	**-**
Specification	650 - 1100 RPM	1.00 - 3.00 ms	0 km/h	**Throttle valve closed idle** **Throttle valve slightly open partial load**
	-	-	-	**If specification is not attained ⇒ Page 24-72 , continuation**

Continuation

- Switch ignition off.

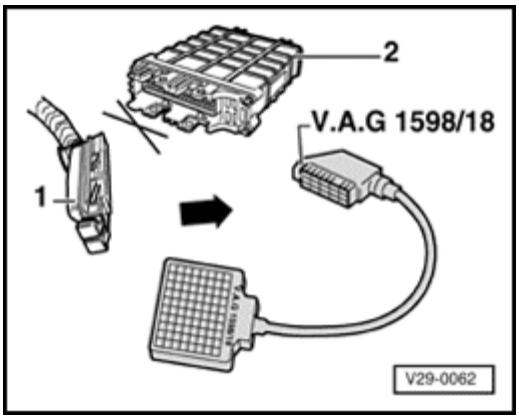

- Connect VAG 1598/18 test box to ECM wiring harness (arrow).
- With throttle valve closed connect multimeter to measure resistance at test box sockets 10 and 33.

  Specification: max. 5.0 ohms (W)
- Slowly open throttle valve.

  Specification: ∞ ohms (W)

If the specifications are not attained:

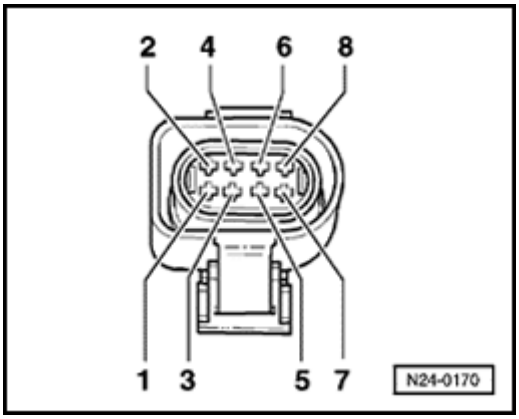

- Separate 8-pin connector to throttle valve control module -J338-.
- Check wiring between test box and 8-pin connector for open circuit according to wiring diagram.
  - Terminal 3 and test box socket 10
  - Terminal 7 and test box socket 33

  Resistance: max. 1.5 ohms (W)

24-73

- Check wiring at 8-pin connector for short circuit to each other.

  ♦ Terminal 7 and test box socket 10

  Specification: ∞ ohms (W)

- Reconnect connector.

If no wiring malfunction is detected:

- Replace throttle valve control module -J338-.

- Read the readiness code ⇒ Page 01-31 . If DTC memory has been erased, verify repair via appropriate display group ⇒ Page 01-33 , Readiness code, creating.

Checking Throttle Position (TP) actuator and Throttle Position (TP) sensor

Test conditions

- Coolant temperature at least 80 ° C (176 ° F)

Test sequence

- Connect VAG 1551/1552 scan tool and select "Engine Electronics" address word 01 ⇒ Page 01-7 . When doing this the engine must be running at idle speed.

Rapid data transfer **Select function**	**HELP**	≺	Indicated on display

- Press buttons -0- and -8- to select "Read Measuring Value Block" function 08 and press -Q- button to confirm input.

24-74

Read Measuring Value Block HELP

Input display group number

Indicated on display

- Press buttons -0-, -3- and -7- to input display group 037 and press -Q- button to confirm input.

Read Measuring Value Block 37 →

1 2 3 4

Indicated on display (1-4 = Display fields)

- Check the specifications for idle control (display field 1-4).

	Display fields			
	1	2	3	4
Display group 037: Idle control				
Display	**xxx RPM**	**xxx RPM**	**xx.x**	**xx.x g/s**
Indicated	**Engine speed**	**Engine speed specification**	**Idle control**	**Mass air flow**
Working range	**650 - 6000 RPM**	**-**	**-16.0 to 16.0**	**0.0 - 20.0 g/s**
Specification	**650 - 750 RPM**	**840 RPM**	**-4.0 to 4.0**	**2.5 - 4.5 g/s**
	If specification is not attained ⇒ Page 24-78 , continuation		**If specification is not attained ⇒ Page 24-76 , evaluating display group 037**	**If specification is not attained ⇒ Page 24-78 , continuation**

24-75

- Press -C- button.

- Press buttons -0-, -3- and -6- to input display group 036 and press -Q- button to confirm input.

Read Measuring Value Block 36 →

1 2 3 4

Indicated on display (1-4 = Display fields)

- Check specifications for idle control (display field 2 and 3).

	Display fields			
	1	2	3	4
Display group 036: Idle control				
Display	xx.x ∠ °	**x.xx g/s**	**x.xx g/s**	-
Indicated	Throttle valve angle	**Mass air flow adaptation value at idle**	**Mass air flow adaptation value with driving range selected**	-
Working range	0.0 - 90.0 ∠ °	**-1.70 to 1.70 g/s**	**-1.70 to 1.70 g/s**	-
Specification	3.0 - 7.0 ∠ °	**-0.50 to 0.50 g/s**	**-0.40 to 0.40 g/s[1)]**	-
	-	**If specification is not attained ⇒ Page 24-77 , evaluating display group 036**		-

[1)] On vehicles with manual transmission "0" is always displayed.

Evaluating display group 037

Display group: 037 **Display field: 3**	**Possible malfunction cause**	**Malfunction elimination**
Idle control in range: 4.0 - 16.0%	♦ Load increased (electrical consumers switched on)	- Switch off electrical consumers
-4.0 to -16.0%	♦ Unmetered air behind throttle valve (also note display group 036, display fields 2 and 3)	- Check intake air system for leaks (unmetered air) ⇒ Page 24-123 - Check exhaust system *Repair Manual, 2.8 Liter VR6 2V Engine Mechanical, Engine Code(s): AAA, Repair Group 26*
0.0%	♦ Wiring open circuit	⇒ Page 24-78 , continuation
-1.5%	♦ Short circuit to Ground (GND)	

Evaluating display group 036

Display group: 036 **Display field: 2**	**Possible malfunction cause**	**Malfunction elimination**
Mass air flow adaption value: 0.50 to 1.70%	♦ Load increased (electrical consumers switched on)	- Switch off electrical consumers
-0.50 to -1.70%	♦ Unmetered air behind throttle valve	- Check intake air system for leaks (unmetered air) ⇒ Page 24-123 - Check exhaust system for leaks: ⇒ *Repair Manual, 2.8 Liter VR6 2V Engine Mechanical, Engine Code(s): AAA, Repair Group 26*
Display field: 3	**Possible malfunction cause**	**Malfunction elimination**
Mass air flow adaption value: 0.40 to 1.70%	♦ Load increased (consumers switched on)	- Switch off consumers
-0.40 to -1.70%	♦ Unmetered air behind throttle valve	- Check intake air system for leaks (unmetered air) ⇒ Page 24-123 - Check exhaust system for leaks: ⇒ *Repair Manual, 2.8 Liter VR6 2V Engine Mechanical, Engine Code(s): AAA, Repair Group 26*

Continuation

- Switch ignition off.

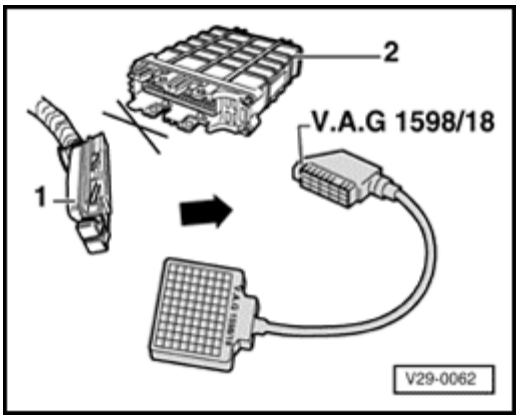

- Connect VAG 1598/18 test box to ECM wiring harness (arrow).
- Switch ignition on.
- With throttle closed connect multimeter to measure resistance at test box sockets 27 and 53.

  Specification: 3-200 ohms (W)

If the specification is not attained:

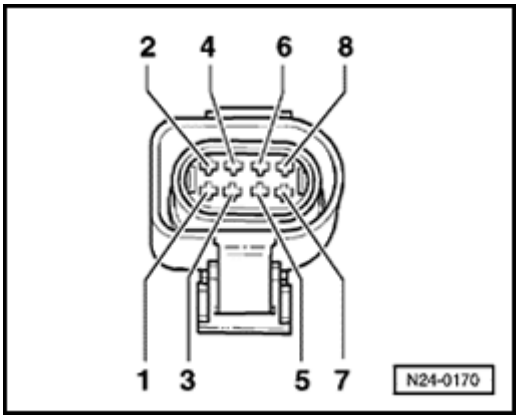

- Disconnect 8-pin connector from throttle valve control module -J338-.
- Check wiring between test box and 8-pin connector for open circuit according to wiring diagram.
  - Terminal 1 and test box socket 27
  - Terminal 2 and test box socket 53
  - Terminal 7 and test box socket 33
  - Terminal 8 and test box socket 62

  Resistance: max. 1.5 ohms (W)

24-79

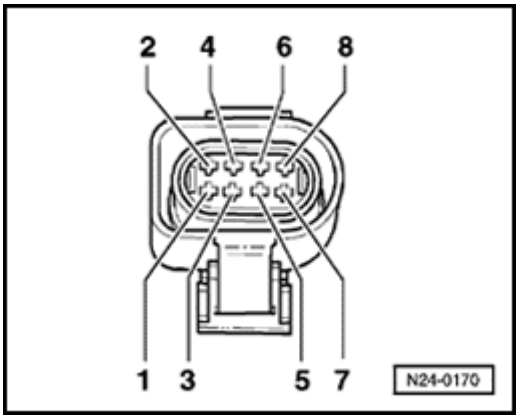

- Check wiring at 8-pin connector for short circuit to one another according to wiring diagram.
  - Terminal 1 and test box socket 53
  - Terminal 1 and test box socket 62
  - Terminal 1 and test box socket 33
  - Terminal 2 and test box socket 33
  - Terminal 2 and test box socket 62
  - Terminal 7 and test box socket 62

  Specification: ∞ ohms (W)

If no wiring malfunction is detected:

- Replace throttle valve control module -J338-.
- Read the readiness code ⇒ Page 01-31 . If DTC memory has been erased, verify repair via appropriate display group ⇒ Page 01-33 , Readiness code, creating.

24-80

Checking Throttle Position (TP) sensor

- Connect VAG 1551/1552 scan tool and select "Engine Electronics" address word 01 ⇒ Page 01-7 . When doing this the ignition must be switched on but engine not running.

Rapid data transfer **Select function**	**HELP**	⮜	Indicated on display - Press buttons -0- and -8- to select "Read Measuring Value Block" function 08 and press -Q- button to confirm input.
Read Measuring Value Block **Input display group number**	**HELP**	⮜	Indicated on display - Press buttons -0-, -0- and -3- to input display group 003 and press -Q- button to confirm input.
Read Measuring Value Block **1 2 3 4**	**3** →	⮜	Indicated on display (1-4 = Display fields) - Check TP sensor specification (display field 3).

	Display fields			
	1	2	3	4
Display group 003: Load registration 1				
Display	xxx RPM	xx.x g/s	**xxx** ∠°	xx.x °C
Indicated	Engine speed	Mass air flow	**Throttle valve angle**	Intake air temperature
Working range	650 - 6000 RPM	-	**0 - 90** ∠°	-46.5 to 141.0
Specification	0 RPM	-	**3 - 7** ∠°	Approx. ambient temperature
	-	-	**If specification is not attained** ⇒ Page 24-82 **, evaluating display group 003**	-

- Slowly open throttle valve and watch angle display in display field 3.

  - The value must increase uniformly over the complete range.

- Press → button.

- Press buttons -0- and -6- to select "End Output" function 06 and press -Q- button to confirm input.

- Switch ignition off.

Note:

The displayed value is dependent on the tolerances of the throttle position sensor and does not correspond to the actual opening angle. The maximum permissible displayed value is 90.0 ∠ ° .

If the value does not increase uniformly:

- Replace throttle valve control module -J338-.

- Read the readiness code ⇒ Page 01-31 . If DTC memory has been erased, verify repair via appropriate display group ⇒ Page 01-33 , Readiness code, creating.

Evaluating display group 003

Display group: 003 **Display field: 3**	**Possible malfunction cause**	**Malfunction elimination**
0.0 ∠ °	♦ Wiring open circuit	- Check wiring ⇒ Page 24-83
99.0 ∠ °	♦ Short circuit to Ground (GND)	

24-83

Check wiring

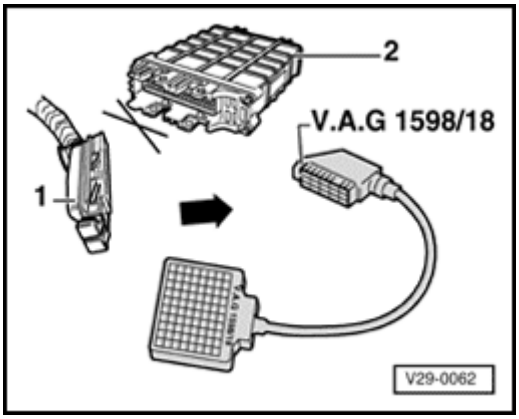

- Connect VAG 1598/18 test box to ECM wiring harness (arrow).
- Connect multimeter using test leads from VW 1594 to measure resistance at test box sockets 01 and 40 and check wiring for short circuit to Ground (GND).

  Specification: ∞ ohms (W)
- Set multimeter to voltage measurement range.
- Switch ignition on.
- Check wiring for short circuit to positive (B+), if necessary note voltage value.
- Switch ignition off.

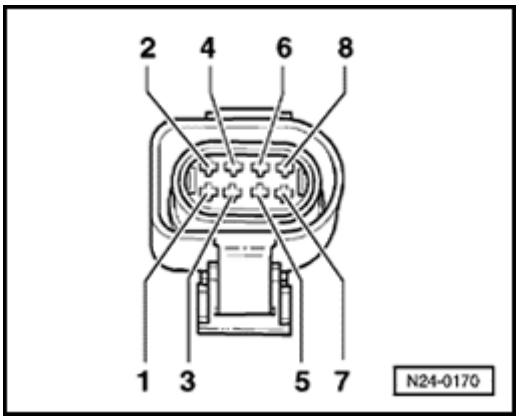

- Disconnect 8-pin connector from throttle valve control module -J338-.

Continuation if voltage is present:

If voltage of about 5 volts was present:

- Connect multimeter using test leads from VW 1594 to measure resistance at test box sockets 40 and 41 and check wiring for short circuit to one another.

  Specification: ∞ ohms (W)

24-84

If the voltage was approx. battery voltage:

- Check wire at 8-pin connector terminal 5 for short circuit to battery positive (B+) according to wiring diagram.

Continuation if no voltage is present:

- Check wiring between test box and 8-pin connector for open circuit according to wiring diagram.

  Terminal 5 and test box socket 40

  Resistance: max. 1.5 ohms (W)

If no wiring malfunction is detected:

- Replace throttle valve control module -J338-.

- Read the readiness code ⇒ Page 01-31 . If DTC memory has been erased, verify repair via appropriate display group ⇒ Page 01-33 , Readiness code, creating.

24-85

Basic Setting (function 04)

Note:

- *Only initiate Basic Setting function 04 when the throttle valve control module -J338-, the Engine Control Module (ECM) -J220- or the engine has been replaced.*

- *Initiating basic setting matches the ECM to the throttle valve control module with the ignition switched on.*

- *If the basic setting is interrupted by the ECM, it can be, that the throttle valve is not at the mechanical idle stop due to contamination (e.g. coking) or an incorrectly adjusted accelerator cable. In this case the malfunction Basic setting not performed will be stored in DTC memory. Thoroughly clean the soiled area in throttle valve control module. The next time the ignition is switched on, basic setting will be automatically performed again.*

Special tools, testers and auxiliary items

- VAG 1551/1552 scan tool with VAG 1551/3 adapter cable

Test conditions

- No malfunctions stored in Diagnostic Trouble Code (DTC) memory ⇒ Page 01-12 , checking DTC memory

Test sequence

- Connect VAG 1551/1552 scan tool and select "Engine Electronics" address word 01 ⇒ Page 01-7 . When doing this ignition must be switched on but engine not running.

24-86

Rapid data transfer **Select function**	**HELP**	⮜	Indicated on display - Press buttons -0- and -4- to select "Basic Setting" function 04 and press -Q- button to confirm input.
Basic Setting **Input display group number**	**HELP**	⮜	Indicated on display - Press buttons -0-, -9- and -8- to input display group 098 and press -Q- button to confirm input.
System in Basic Setting **1 2 3 4**	**98** →	⮜	Indicated on display (1-4 = Display fields) ***Note:*** *After confirming display group number 098, throttle position actuator will be moved from min. to max., then start position. The control module stores appropriate throttle valve angle in permanent memory. Throttle then returns to start position.* - Check the specifications (display fields 1-4).

	Display fields			
	1	2	3	4
Display group 098: Basic setting, throttle valve control module				
Display	**x.xxx V**	**x.xxx V**	**Text**	**Text**
Indicated	**Throttle valve potentiometer voltage**	**Throttle valve positioner voltage**	**Operating mode**	**Basic setting status**
Working range	**0.000 - 5.000 V**	**0.000 - 5.000 V**	**-**	**-**
Specification	**-**	**-**	**Idle**	**ADP. runs**
	4.000 - 5.000 V	**3.000 - 4.000 V**	**Idle**	**ADP. OK (ADP. ERROR appears if basic setting is unsuccessful**
	If specification is not attained ⇒ Page 24-68 , check throttle valve control module			

- Terminate engine basic setting at earliest after 30 seconds by pressing the → button.

- Press buttons -0- and -6- to select "End Output" function 06 and press -Q- button to confirm input.

24-88

Engine Coolant Temperature (ECT) sensor, checking

Special tools, testers and auxiliary items

- VAG 1551/1552 scan tool with VAG 1551/3 adapter cable
- VAG 1598/18 test box
- Multimeter (Fluke 83 or equivalent)
- Connector test kit VW 1594
- Wiring diagram

Test conditions

- Engine cold

Test sequence

- Connect VAG 1551/1552 scan tool and select "Engine Electronics" address word 01 ⇒ Page 01-7 . When doing this ignition must be switched on.

Rapid data transfer **HELP** ⮜ Indicated on display

Select function

- Press buttons -0- and -8- to select "Read Measuring Value Block" function 08 and press -Q- button to confirm input.

24-89

Read Measuring Value Block **HELP** ⮜ Indicated on display

Input display group number

- Press buttons -0-, -0- and -1- to input display group 001 and press -Q- button to confirm input.

Read Measuring Value Block **1** → ⮜ Indicated on display (1-4 = Display fields)

1 2 3 4

- Check the specification for coolant temperature sensor (display field 2).

	Display fields			
	1	2	3	4
Display group 001: Idle test				
Display	xxxx RPM	**xxx.x ° C**	xx.x%	xx.x ∠ °
Indicated	Engine speed	**Coolant temperature**	O2S control	Ignition angle
Working range	650 - 6000 RPM	**-46.5 to 141.0 ° C**	-25.0 to 25.0%	0.0 - 50.0 ∠ °
Specification	0 RPM	**Approx. ambient temperature 1)**	The value must fluctuate at least 3% in range -5.0 to 5.0%	2.0 - 15.0 ∠ °
	-	**If specification is not attained ⇒ Page 24-91 , evaluating display group 001**	-	-

1) If a temperature is displayed which deviates greatly from the ambient temperature of the sensor, check sensor wiring for resistance/open circuit.

24-90

Continuation

- Start engine and run at idle speed.

  - The temperature value must increase uniformly.

If the specification is not attained:

- Replace Engine Coolant Temperature (ECT) sensor -G62-.

WARNING!

The cooling system is pressuri ed when the engine is warm. When opening the expansion tank, wear gloves and other appropriate protection, cover the cap with a cloth, and open carefully to relieve system pressure slowly.

- Press → button.

- Press buttons -0- and -6- to select "End Output" function 06 and press -Q- button to confirm input.

- Switch ignition off.

Notes:

- *Display on VAG 1551 scan tool jumps by 1.5 °C increments.*

- *If irregular engine running occurs in certain temperature ranges and the temperature value does not increase without interruption, the temperature signal is temporarily interrupted and the sensor must be replaced.*

Evaluating display group 001

Display group: 001 Display field: 2	Possible malfunction cause	Malfunction elimination
Approx. -46.6 ° C	◆ Wiring open circuit or short circuit to positive (B+)	- Check wiring ⇒ Page 24-90
Approx. 141.0 ° C	◆ Short circuit to Ground (GND)	

Check wiring

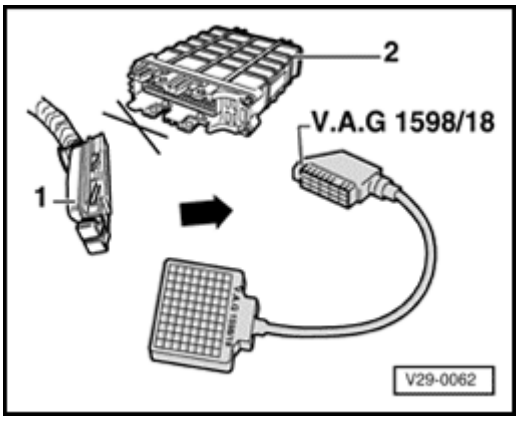

- Connect VAG 1598/18 test box to ECM wiring harness (arrow).

24-92

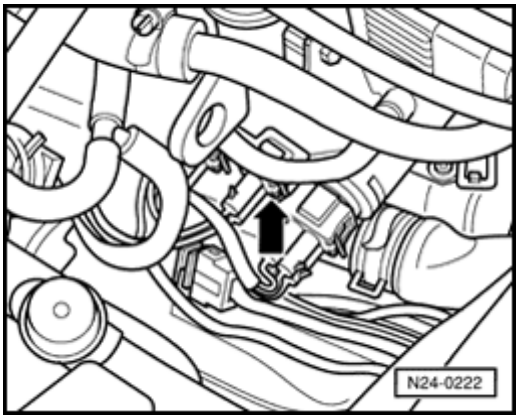

- Disconnect 2-pin connector from Engine Coolant Temperature (ECT) sensor -G62-.

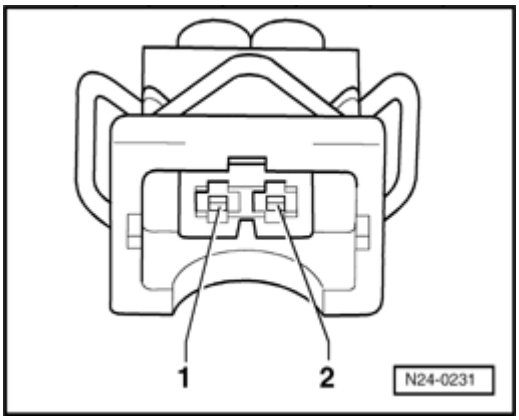

- Check wiring between test box and 2-pin connector for open circuit according to wiring diagram.
  - Terminal 1 and test box socket 14
  - Terminal 2 and test box socket 33

  Resistance: max. 1.5 ohms (W)
- Check wire between ECM connector and 2-pin connector terminal 2 for short circuit to wire terminal 1 and to vehicle Ground (GND), according to wiring diagram.
  - Terminal 2 and test box socket 14

  Specification: ∞ ohms (W)

24-93

- Additionally, check both wires for short circuit to battery positive (B+).

  Specification: ∞ ohms (W)

If no malfunction in wire is detected:

- Perform resistance measurement at ECT sensor -G62- terminals 1 and 2, resistance values ⇒ Page 24-17 , ⇒ Fig. 1 .

If the specification is not attained:

- Replace ECT sensor -G62-.

- Read the readiness code ⇒ Page 01-31 . If DTC memory has been erased, verify repair via appropriate display group ⇒ Page 01-33 , Readiness code, creating.

24-94

Intake Air Temperature (IAT) sensor, checking

Special tools, testers and auxiliary items

- VAG 1551/1552 scan tool with VAG 1551/3 adapter cable
- VAG 1598/18 test box
- Multimeter (Fluke 83 or equivalent)
- Connector test kit VW 1594
- Wiring diagram
- Freeze spray (commercially available)

Test sequence

- Connect VAG 1551/1552 scan tool and select "Engine Electronics" address word 01 ⇒ Page 01-7 . When doing this ignition must be switched on.

Rapid data transfer **Select function**	**HELP**	≺	Indicated on display

- Press buttons -0- and -8- to select "Read Measuring Value Block" function 06 and press -Q- button to confirm input.

Read Measuring Value Block **Input display group number**	**HELP**	≺	Indicated on display

- Press buttons -0-, -0- and -3- to input display group 003 and press -Q- button to confirm input.

24-95

Read Measuring Value Block 3 →

1 2 3 4

Indicated on display (1-4 = Display fields)

- Check the specification for intake air temperature sensor (display field 4).

	Display fields			
	1	2	3	4
Display group 003: Load registration 1				
Display	xxx RPM	xx.x g/s	xxx ∠ °	**xx.x ° C**
Indicated	Engine speed	Mass air flow	Throttle valve angle	**Intake air temperature**
Working range	650 - 6000 RPM	0.0 - 25.0 g/s	0 - 90 ∠ °	**-6.5 to 141.0**
Specification	0 RPM	-	3 - 7 ∠ °	**Approx. ambient temperature** [1)]
	-	-	-	**Continue ⇒ Page 24-96 , evaluating display group 003**

[1)] If a temperature is displayed which deviates greatly from the ambient temperature of the sensor, check sensor wiring for resistance/open circuit.

Evaluating display group 003

Display group: 003 Display field: 4	Possible malfunction cause	Malfunction elimination
-46.5 ° C	♦ Wiring open circuit or short circuit to positive (B+)	- Check wiring ⇒ Page 24-96
141.0 ° C	♦ Short circuit to Ground (GND)	
Approx. ambient temperature	♦ Signal periodically interrupted	- Check IAT sensor ⇒ Page 24-98 , continuation at ambient temperature

Checking wiring

- Switch ignition off.

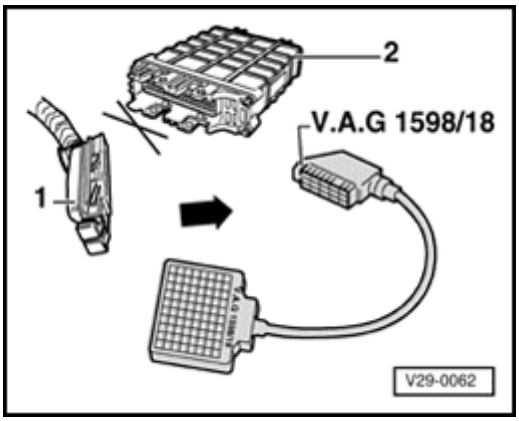

- Connect VAG 1598/18 test box to ECM wiring harness (arrow).

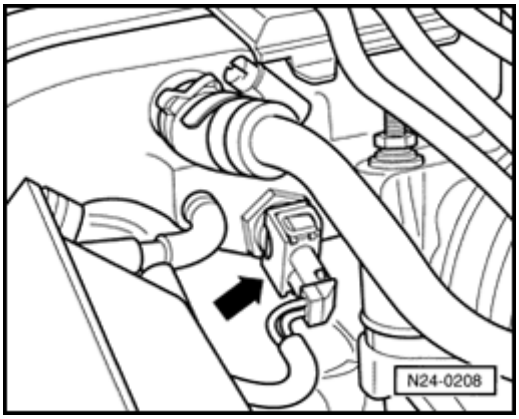

- Disconnect 2-pin connector (arrow) at Intake Air Temperature (IAT) sensor -G72-.
- Check wiring between test box and 2-pin connector for open circuit according to wiring diagram.
  - Terminal 1 and test box socket 36
  - Terminal 2 and test box socket 33

  Resistance: max. 1.5 ohms (W)
- Check wire between ECM connector and 2-pin connector terminal 2 for short circuit to wire terminal 1 and to vehicle Ground (GND), according to wiring diagram.
  - Terminal 2 and test box socket 36

  Specification: ∞ ohms (W)
- Additionally, check both wires for short circuit to battery positive (B+).

  Specification: ∞ ohms (W)

If no malfunction in wire is detected:

- Perform resistance measurement on IAT sensor -G72- terminals 1 and 2, resistance values ⇒ Page 24-17 , ⇒ Fig. 1 .

If the specification is not attained:

- Replace Intake Air Temperature (IAT) sensor -G72-.

24-98

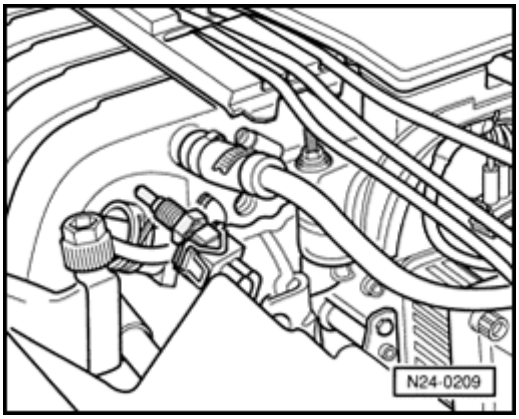

Continuation of check when display ambient temperature

- Remove IAT sensor -G72- (harness remains connected).
- Read intake air temperature value in display field 4.
- Spray sensor with a commercially available freeze spray and at the same time observe temperature value.

• Temperature value must decrease

If the specification is not attained:

- Replace Intake Air Temperature (IAT) sensor -G72-.
- Read the readiness code ⇒ Page 01-31 . If DTC memory has been erased, verify repair via appropriate display group ⇒ Page 01-33 , Readiness code, creating.

24-99

Engine speed (RPM) sensor, checking

Special tools, testers and auxiliary items

- VAG 1598/18 test box
- Multimeter (Fluke 83 or equivalent)
- Connector test kit VW 1594
- Wiring diagram

Test sequence

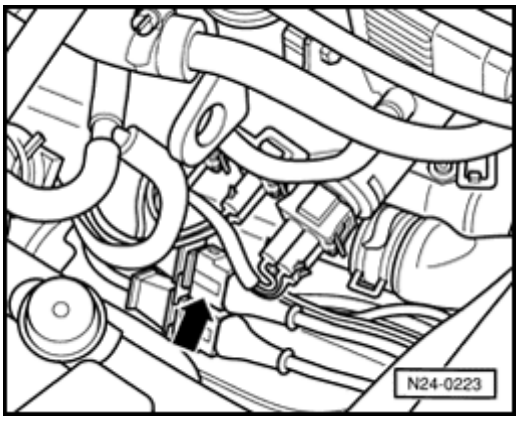

- Disconnect white 3-pin connector from engine speed sensor (arrow).

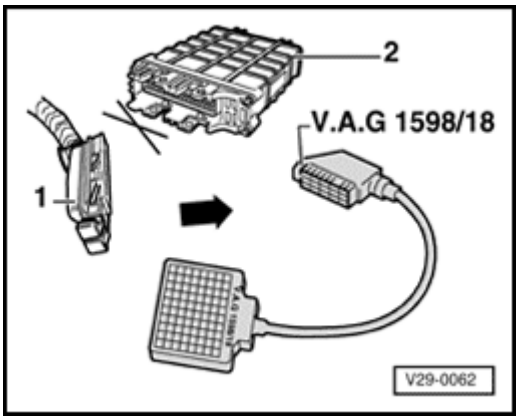

- Connect VAG 1598/18 test box to ECM wiring harness (arrow).

24-100

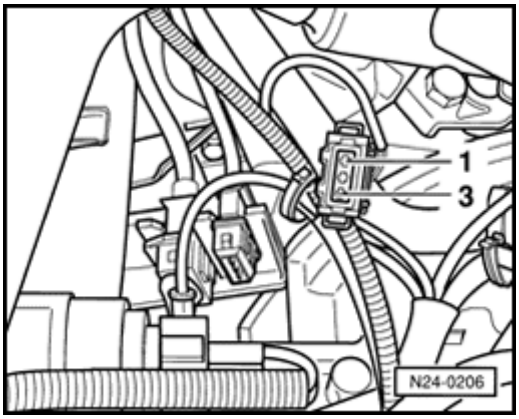

- Check wiring between test box and 3-pin connector for open circuit according to wiring diagram.
  - Terminal 1 and test box socket 67
  - Terminal 2 and test box socket 68
  - Terminal 3 and test box socket 56

  Resistance: max. 1.5 ohms (W)
- Additionally, check wiring for short circuit to one another.
  - Terminal 2 and test box socket 56
  - Terminal 1 and test box socket 56
  - Terminal 1 and test box socket 68

  Specification: ∞ ohms (W)

If no wiring malfunction is detected:

- Replace engine speed (RPM) sensor -G28-.
- Read the readiness code ⇒ Page 01-31 . If DTC memory has been erased, verify repair via appropriate display group ⇒ Page 01-33 , Readiness code, creating.

24-101

Speedometer Vehicle Speed Sensor (VSS) signal, checking

Special tools, testers and auxiliary items

- VAG 1551/1552 scan tool with VAG 1551/3 adapter cable
- Multimeter (Fluke 83 or equivalent)
- Connector test kit VW 1594
- Wiring diagram

Test conditions

- Speedometer OK, checking:

⇒ *Repair Manual, Electrical Equipment, Repair Group 90*

Note:

To check the vehicle speed sensor signal, vehicle must be test driven. To do this a second technician is necessary.

Test sequence

- Engine running at idle

- Connect VAG 1551/1552 scan tool and select "Engine Electronics" address word 01 ⇒ Page 01-7 .

Rapid data transfer **Select function**	**HELP**	<	Indicated on display

- Press buttons -0- and -8- to select "Read Measuring Value Block" function 08 and press -Q- button to confirm input.

24-102

Read Measuring Value Block HELP

Input display group number

Indicated on display

- Press buttons -0-, -0- and -5- to input display group 005 and press -Q- button to confirm input.

Read Measuring Value Block 5 →

1 2 3 4

Indicated on display (1-4 = Display fields)

- Perform test drive and observe display in display field 3 (second technician necessary).

	Display fields			
	1	2	3	4
Display group 005: General engine data				
Display	xxx RPM	xx.xx ms	**xxx km/h**	Idle
Indicated	Engine speed	Engine load	**Driving speed**	Operating modes
Working range	650 - 6000 RPM	0.00 - 25.00 ms	**-**	-
Specification	-	-	**Approx. driving speed**	-
	-	-	**If no driving speed is displayed ⇒ Page 24-103 , continuation**	

- Press → button.
- Press buttons -0- and -6- to select "End Output" function 06 and press -Q- button to confirm input.
- Switch ignition off.

24-103

Continuation

If no speed is indicated:

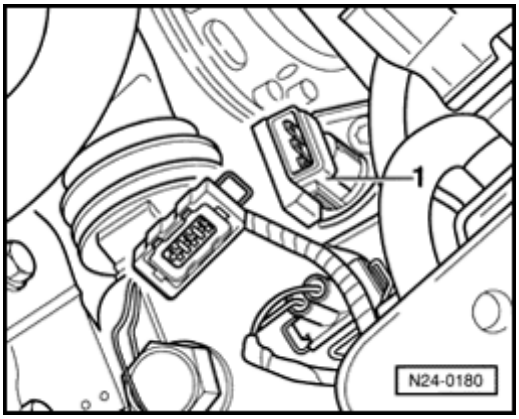

- Disconnect 3-pin connector from vehicle speed sensor -1-.
- Switch ignition on.

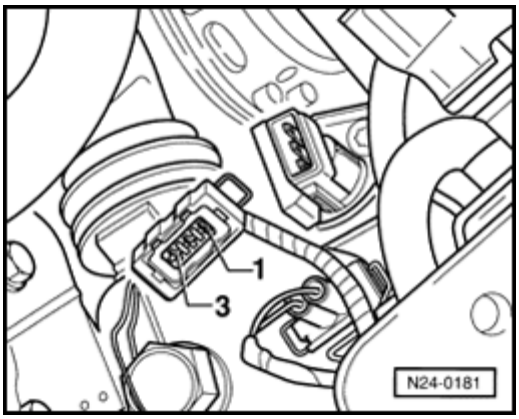

- Connect multimeter using test leads from VW 1594 to measure voltage at terminals 1 and 3 of connector.

  Specification: 9-14.5 volts
- Switch ignition off.
- Reconnect connector.

If no voltage was present:

- Check wiring according to wiring diagram.

24-104

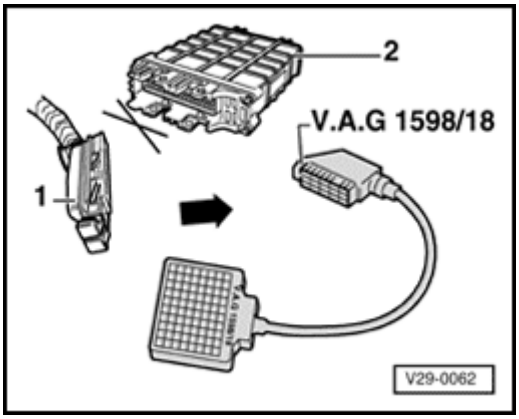

If voltage was 9-14.5 volts:

- Connect VAG 1598/18 test box to ECM wiring harness (arrow).
- Check wiring between central electrical panel and test box socket 65 for open circuit according to wiring diagram.

  Resistance: max. 1.5 ohms (W)
- Connect multimeter using test leads from VW 1594 to measure voltage at test box sockets 56 and 65.
- Switch ignition on.
- Lift left front wheel and rotate by hand or push vehicle.

  • The voltage must fluctuate between 0 and at least 4 volts.

If no wiring malfunction is detected and voltage was present between terminals 1 and 3:

- Replace speedometer Vehicle Speed Sensor (VSS) -G22-.
- Read the readiness code ⇒ Page 01-31 . If DTC memory has been erased, verify repair via appropriate display group ⇒ Page 01-33 , Readiness code, creating.

24-105

Engine Control Module (ECM) voltage supply, checking

Special tools, testers and auxiliary items

- VAG 1551/1552 scan tool with VAG 1551/3 adapter cable
- VAG 1598/18 test box
- Multimeter (Fluke 83 or equivalent)
- Connector test kit VW 1594
- Wiring diagram

Test sequence

- Connect VAG 1551/1552 scan tool and select "Engine Electronics" address word 01 ⇒ Page 01-7 . When doing this ignition must be switched on.

Rapid data transfer **Select function**	**HELP**	≺	Indicated on display - Press buttons -0- and -8- to select "Read Measuring Value Block" function 08 and press -Q- button to confirm input.
Read Measuring Value Block **Input display group number**	**HELP**	≺	Indicated on display - Press buttons -0-, -0- and -2- to input display group 002 and press -Q- button to confirm input.

24-106

Read Measuring Value Block **2** →

1 2 3 4

Indicated on display (1-4 = Display fields)

- Check battery voltage (display field 3).

	Display fields			
	1	2	3	4
Display group 002: General engine data				
Display	xxxx RPM	xx.xx ms	**xx.xxx**	xxx.x° C
Indicated	Engine speed	Fuel injection period	**Battery voltage**	Intake air temperature
Working range	650 - 6000 RPM	0.00 - 25.00 ms	**0.000 - 16.500 V**	-46.5 to 141.0° C
Specification	0 RPM	-	**12.000 - 14.500 V**	-
	-	-	**If specification is not attained ⇒ Page 24-107 , evaluating display group 002**	-

- Press → button.
- Press buttons -0- and -6- to select "End Output" function 06 and press -Q- button to confirm input.

Evaluating display group 002

Display group: 002 **Display field: 3**	**Possible malfunction cause**	**Malfunction elimination**
If no display appears on VAG 1551	♦ Fuse 15 faulty	- Replace fuse
	♦ Wiring open circuit	- Check voltage supply terminal 15 ⇒ Page 24-108
If value displayed fluctuates between 12.0 - 14.5 V	♦ Loose connection	- Check voltage supply terminal 30 ⇒ Page 24-108
0.0 - 12.0 V	♦ Battery discharged/faulty ♦ Voltage regulator faulty	- Check battery - Check generator - Check voltage regulator
14.5 - 16.5 V	♦ Generator faulty ♦ Voltage regulator faulty	- Check generator - Check voltage regulator

Checking voltage supply terminal 30

- Switch ignition off.

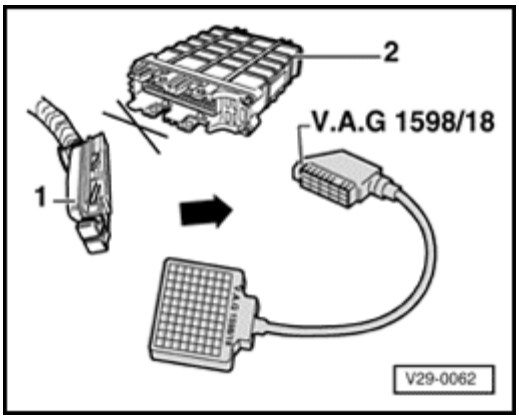

- Connect VAG 1598/18 test box to ECM wiring harness (arrow).
- Connect multimeter using test leads from VW 1594 to measure voltage at test box sockets 1 and 54.

  Specification: 12-14.5 volts

If the specification is not attained:

- Check wiring according to wiring diagram.

Checking voltage supply terminal 15

- Switch ignition off.

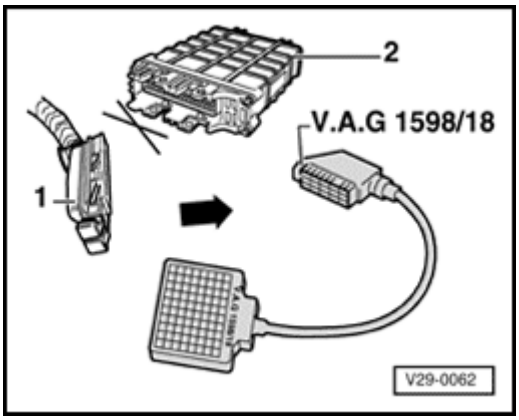

- Connect VAG 1598/18 test box to ECM wiring harness (arrow).
- Switch ignition on.
- Connect multimeter using test leads from VW 1594 to measure voltage at test box sockets 1 and 23.

  Specification: 12-14.5 volts

If the specification is not attained:

- Check wiring according to wiring diagram.

24-109

Signal from automatic transmission, checking

Special tools, testers and auxiliary items

- VAG 1551/1552 scan tool with VAG 1551/3 adapter cable
- VAG 1598/18 test box
- Multimeter (Fluke 83 or equivalent)
- Connector test kit VW 1594
- Wiring diagram

Test sequence

- Engine running at idle

- Connect VAG 1551/1552 scan tool and select "Engine Electronics" address word 01 ⇒ Page 01-7 .

Rapid data transfer **Select function**	**HELP**	≺	Indicated on display - Press buttons -0- and -8- to select "Read Measuring Value Block" function 08 and press -Q- button to confirm input.
Read Measuring Value Block **Input display group number**	**HELP**	≺	Indicated on display - Press buttons -0-, -0- and -8- to input display group 008 and press -Q- button to confirm input.

Read Measuring Value Block 8 →

1 2 3 4

Indicated on display (1-4 = Display fields)

- Check signals from automatic transmission (display field 2).

	Display fields			
	1	2	3	4
Display group 008: Signals to Engine Control Module (ECM)				
Display	xxxx RPM	**Text**	Text	Text
Indicated	Engine speed	**Driving range status**	Air conditioner status	Air conditioner compressor status
Working range	650 - 6000 RPM	**-**	-	-
Specification	650 - 750 RPM	**P and N: NEUTRAL** **1, 2, 3 and D: ON**	-	-
	-	**If specification is not attained ⇒ Page 24-110 , continuation**	-	-

Continuation

If the display does not read as described:

- Check wiring between ECM (terminals 07, 11, 18 and 21) and Transmission Control Module (TCM) according to wiring diagram.

24-111

Signal from A/C compressor, checking

Special tools, testers and auxiliary items

- VAG 1551/1552 scan tool with VAG 1551/3 adapter cable
- VAG 1598/18 test box
- Multimeter (Fluke 83 or equivalent)
- Connector test kit VW 1594
- Wiring diagram

Check conditions

- Function of A/C OK
- A/C switched off
- Interior of vehicle is at room temperature (above 15 ° C (59 ° F))
- No malfunctions stored in DTC memory ⇒ Page 01-12 , checking DTC memory

24-112

Test sequence

- Engine running at idle

- Connect VAG 1551/1552 scan tool and select "Engine Electronics" address word 01 ⇒ Page 01-7 .

Rapid data transfer **Select function**	**HELP**	⮜	Indicated on display - Press buttons -0- and -8- to select "Read Measuring Value Block" function 08 and press -Q- button to confirm input.
Read Measuring Value Block **Input display group number**	**HELP**	⮜	Indicated on display - Press buttons -0-, -0- and -8- to input display group 008 and press -Q- button to confirm input.
Read Measuring Value Block 8 **1 2 3 4**	→	⮜	Indicated on display (1-4 = Display fields) - Switch on A/C (lowest temperature and highest blower speed). - Check specifications for A/C (display fields 3 and 4).

24-113

	Display fields			
	1	2	3	4
Display group 008: Signals to Engine Control Module (ECM)				
Display	xxxx RPM	Text	**Text**	**Text**
Indicated	Engine speed	Driving range status	**Air conditioning status**	**A/C compressor status**
Working range	650 - 6000 RPM	-	**-**	**-**
Specification	650 - 750 RPM	Neutral	**Air conditioning on:** **A/C-HIGH** **Air conditioning off:** **A/C-LOW**	**Compressor on: ON Compressor off: Compr. OFF**
	-	-	**If specification is not attained ⇒ Page 24-114 , continuation**	

Note:

The A/C compressor will be switched off (Compr. OFF) when the ECM recognizes full load and the air conditioning is switched on (A/C-HIGH).

24-114

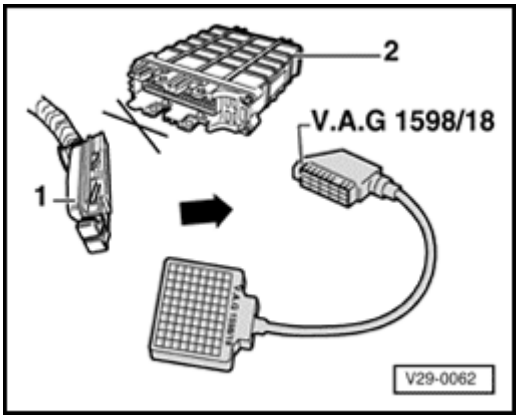

Continuation

If the display does not indicate as described:

- Connect VAG 1598/18 test box to ECM wiring harness (arrow).
- Check wiring between test box sockets 37 and 39 respectively and A/C for open circuit according to wiring diagram.

  Resistance: max. 1.5 ohms (W)

If the specification is not attained:

- Check wiring according to wiring diagram.

24-115

Fuel injectors, checking

Checking activation

Check activation of fuel injectors ⇒ Page 01-71 , Output Diagnostic Test Mode (DTM).

Special tools, testers and auxiliary items

- VAG 1598/18 test box
- Multimeter (Fluke 83 or equivalent)
- VAG 1527B voltage tester
- Connector test kit VW 1594
- Wiring diagram

Check conditions

- Engine speed sensor OK
- Fuel pump relay OK

Test sequence

- Remove intake manifold, upper ⇒ Page 24-14 , item 1 .
- Disconnect 5-pin connector from ignition coil.

24-116

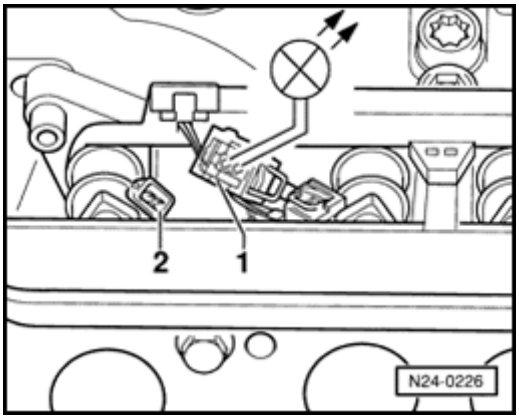

- Disconnect harness connector -1- from connection -2- and connect VAG 1527B voltage tester with test leads from VW 1594 to the terminals of the harness connector.
- Disconnect harness connectors from fuel injectors 2-6.
- Operate starter and check the voltage supply for no. 1 cyl. fuel injector.
  - LED must flicker
- Repeat check on fuel injectors 2-6.

If the LED does not flicker:

- Switch ignition off.

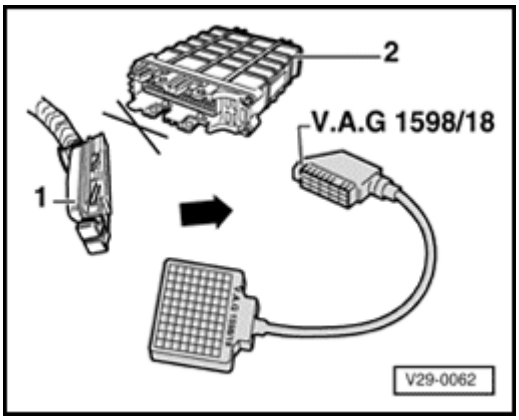

- Connect VAG 1598/18 test box to ECM wiring harness (arrow).

24-117

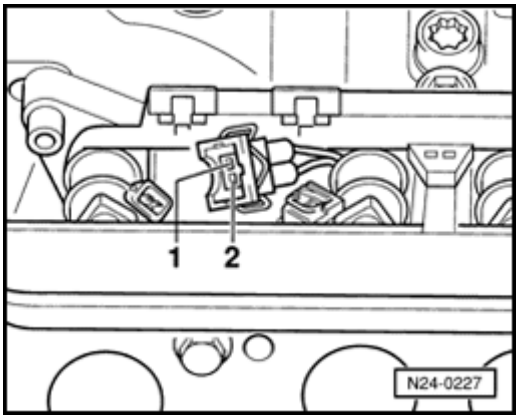

- Check wiring between test box and connector for open circuit according to wiring diagram.
  - No. 1 cyl. fuel injector: terminal 2 and test box socket 24
  - No. 2 cyl. fuel injector: terminal 2 and test box socket 25
  - No. 3 cyl. fuel injector: terminal 2 and test box socket 26
  - No. 4 cyl. fuel injector: terminal 2 and test box socket 02
  - No. 5 cyl. fuel injector: terminal 2 and test box socket 03
  - No. 6 cyl. fuel injector: terminal 2 and test box socket 04

  Resistance: max.1.5 ohms (W)
- Check wiring between fuel injector connector terminal 1 and relay panel for open circuit according to wiring diagram.

  Resistance: max. 1.5 ohms (W)
- Additionally, check wires for short circuit to one another.

  Specification: ∞ ohms (W)

Checking resistance of fuel injectors

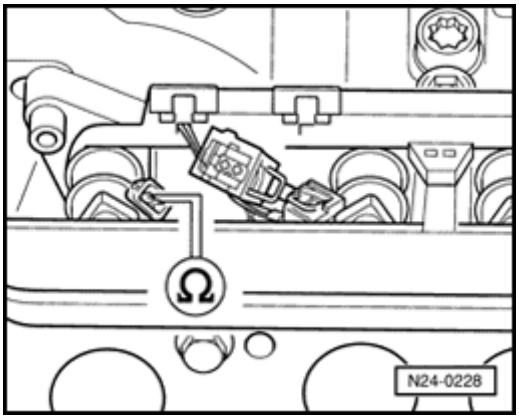

- Check resistance of fuel injectors individually.

  Specification: 15-21.5 ohms (W)

If the specification is not attained, replace fuel injector (s) as necessary.

Checking spray pattern and for leaks

WARNING!

- ***DO NOT smoke or work near heaters or other fire ha ards when working on fuel system.***
- ***The fuel system is pressuri ed! Before loosening hose connections or opening the test connection, wrap a cloth around the connection. Then release pressure by slowly disconnecting the hose/fitting.***

Special tools, testers and auxiliary items

- Connector test kit VW 1594
- VAG 1630 digital potentiometer
- VAG 1602 fuel analyzer

- Remove intake manifold, upper ⇒ Page 24-14 , item 1 .

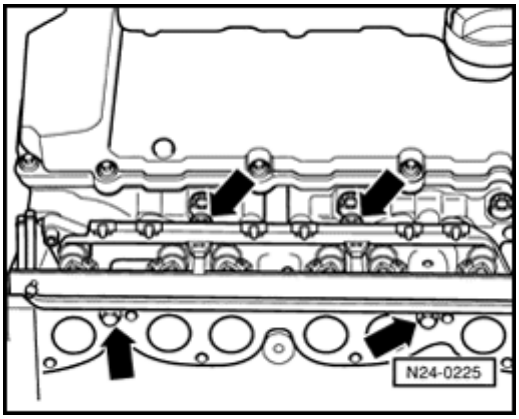

- Remove fuel rail complete with fuel injectors.

24-119

- Hold fuel injectors in VAG 1602 fuel analyzer.

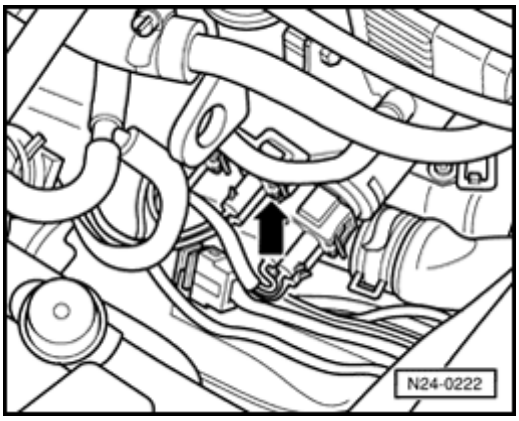

- Disconnect harness connector from Engine Coolant Temperature (ECT) sensor -G62-.
- Disconnect 5-pin connector from ignition coil.

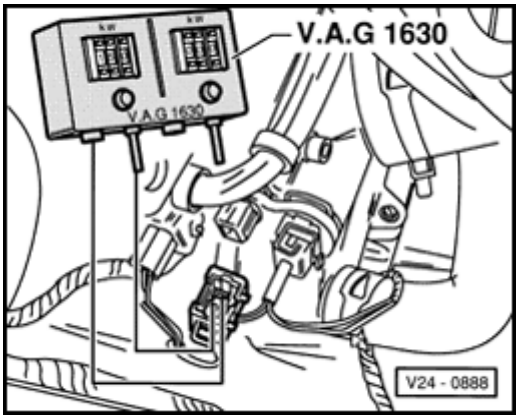

- Set VAG 1630 digital potentiometer side A to 15 KΩ and using test leads from VW 1594 connect to terminals 1 and 3 of disconnected harness connector.
- Operate starter (second technician required).
  - The fuel injectors must pulsate and spray in accordance with firing order.
- Switch ignition off and check fuel injectors for leaks.
  - No more than 2 drops/minute may leak from each fuel injector.

Note:

When installing the fuel injectors make sure that the O-rings are not damaged.

24-120

Fuel pressure regulator and residual pressure, checking

The fuel pressure regulator controls the fuel pressure dependent upon intake manifold pressure.

Special tools, testers and auxiliary items

- VAG 1318 pressure tester
- VAG 1318/10 adapter
- VAG 1318/11 adapter
- VAG 1318/16 adapter

Test conditions

- Fuel pump delivery rate OK, checking:

⇒ *Repair Manual, 2.8 Liter VR6 2V Engine Mechanical, Engine Code(s): AAA, Repair Group 20*

Test sequence

WARNING!

- ***DO NOT smoke or work near heaters or other fire ha ards when working on fuel system.***
- ***The fuel system is pressuri ed! Before loosening hose connections or opening the test connection, wrap a cloth around the connection. Then release pressure by slowly disconnecting the hose/fitting.***

24-121

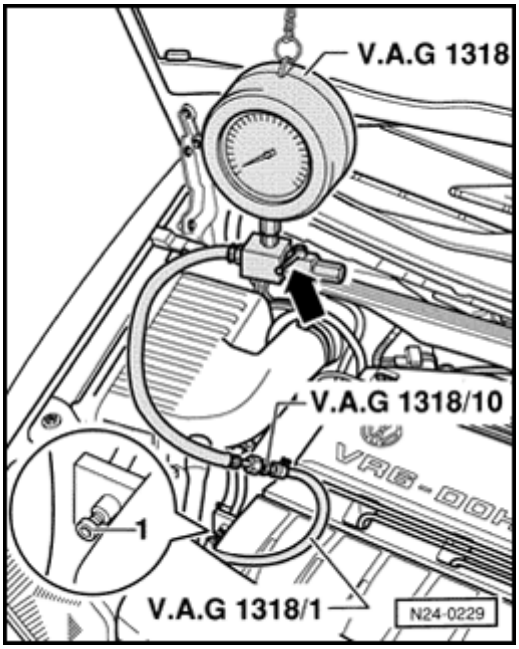

- Disconnect test port plug -1- from fuel rail and connect pressure gauge VAG 1318 with adapter VAG 1318/10 and hose VAG 1318/1 to fuel rail.
  - Fuel gauge valve must be closed, handle 90° to direction of flow (arrow).
- Start engine and run at idle speed.
- Check fuel pressure.

  Specification: approx. 2.5 bar (36 psi)

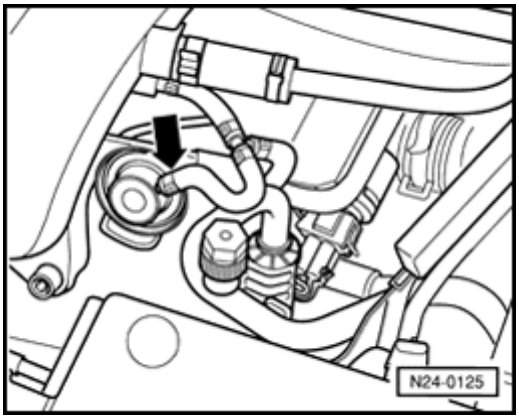

- Disconnect vacuum hose from intake manifold upper section at fuel pressure regulator (arrow).
  - The fuel pressure must rise to approx. 3.0 bar (44 psi)
- Switch ignition off.

24-122

- Check for leaks and residual pressure by watching pressure drop on gauge.

  - After 10 minutes there must be a residual pressure of at least 2 bar (29 psi).

If the residual pressure drops below 2 bar (29 psi):

- Start engine and run at idle speed.

- After pressure has built up switch ignition off and simultaneouslyclamp-off return line (with blue arrow) on fuel rail.

- Watch pressure drop on gauge.

If the pressure does not drop:

- Replace fuel pressure regulator.

If the pressure drops again:

- Check fuel pump check valve.

⇒ *Repair Manual, 2.8 Liter VR6 2V Engine Mechanical, Engine Code(s): AAA, Repair Group 20*

- Check hose connections, O-rings on fuel rail and fuel injectors for leaks.

- Check pressure gauge for leaks.

24-123

Intake air system (outside air), checking for leaks

Checking with engine leak detector spray G 001 800 A1

Special tools, testers and auxiliary items

- VAG 1551/1552 scan tool with VAG 1551/3 adapter cable
- Engine leak detector spray G 001 800 A1

Notes:

- *The vacuum in the intake system will cause the leak detector spray to be drawn in with outside air. The leak detector spray reduces the ignitability of the mixture. This leads to a drop in engine speed and to a significant increase of the CO content.*
- *Observe safety precautions listed on the container.*

Test sequence

- Engine running at idle

- Connect VAG 1551/1552 scan tool and select "Engine Electronics" address word 01 ⇒ Page 01-7 .

Rapid data transfer **Select function**	**HELP**	<	Indicated on display

- Press buttons -0- and -8- to select "Read Measuring Value Block" function 08 and press -Q- button to confirm input.

24-124

Read Measuring Value Block HELP

Input display group number

Indicated on display

- Press buttons -0-, -0- and -1- to input display group 001 and press -Q- button to confirm input.

Read Measuring Value Block 1 →

1 2 3 4

Indicated on display (1-4 = Display fields)

- Note Oxygen Sensor (O2S) control in display field 3.

	Display fields			
	1	2	3	4
Display group 001: Idle test				
Display	xxxx RPM	xxx.x ° C	**xx.x**	xx.x ∠ °
Indicated	Engine speed	Engine temperature	**O2S control**	Ignition angle
Working range	650 - 6000 RPM	-	**-25.0 to 25.0**	0.0 - 40.0 ∠ °
Specification	650 - 750 RPM	-	**The value must fluctuate at least 2 in range - 5.0 to 5.0**	2.0 - 15.0 ∠ °

- Systematically spray parts of intake system with engine leak detector spray.

If the engine speed drops or the value displayed for O2S control changes:

- Check area of intake system which has been sprayed for leaks and eliminate leaks.

Multiport fuel injection and ignition system

Ignition system, servicing

Notes:

- *Only the components which specifically relate to the ignition system are dealt with here. For the other components of the fuel injection and ignition system* ⇒ *Page 24-1* .
- *The fuel injection and ignition system control module is equipped with On Board Diagnostic (OBD).*
- *Components marked with an asterisk (*) are checked via the On Board Diagnostic (OBD) program.*
- *Check Diagnostic Trouble Code (DTC) memory before carrying out repairs and troubleshooting* ⇒ *Page 01-12* .

Safety precautions ⇒ Page 28-5 .

Spark plugs, technical data ⇒ Page 28-7 .

28-2

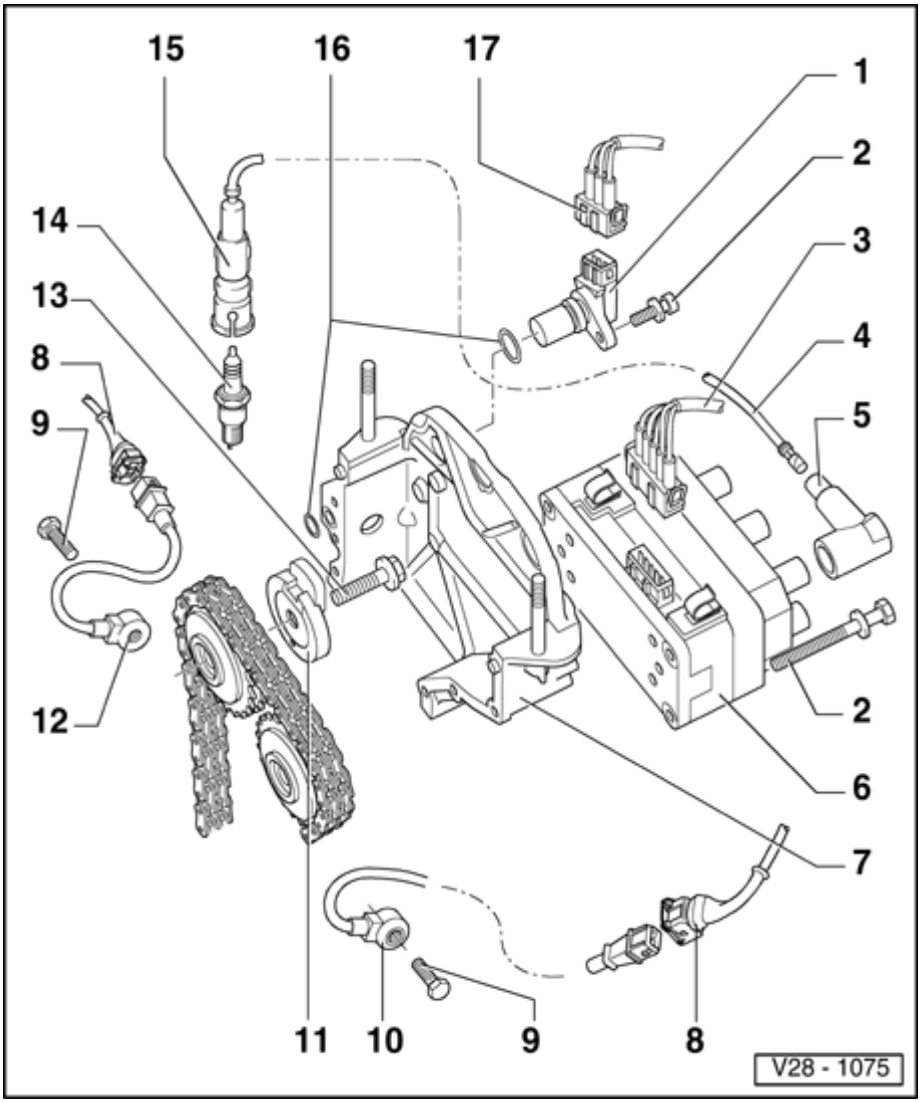

Ignition system, components

Note:

Engine Control Module (ECM) - J220- with connector ⇒ Page 24-6 , item 3 .*

1 - Camshaft Position (CMP) sensor -G40-*

- Checking ⇒ Page 28-16
- Note spacer rings

2 - 10 Nm (7 ft lb)

3 - Connector

- 5-pin
- For ignition coil -N152-

4 - Ignition wire

- Check for continuity

5 - Suppressor

- Resistance: 0.6-1.4 kΩ

6 - Ignition coil -N152-*

- With ignition wire identification, do not interchange
- Checking ⇒ Page 28-27

28-3

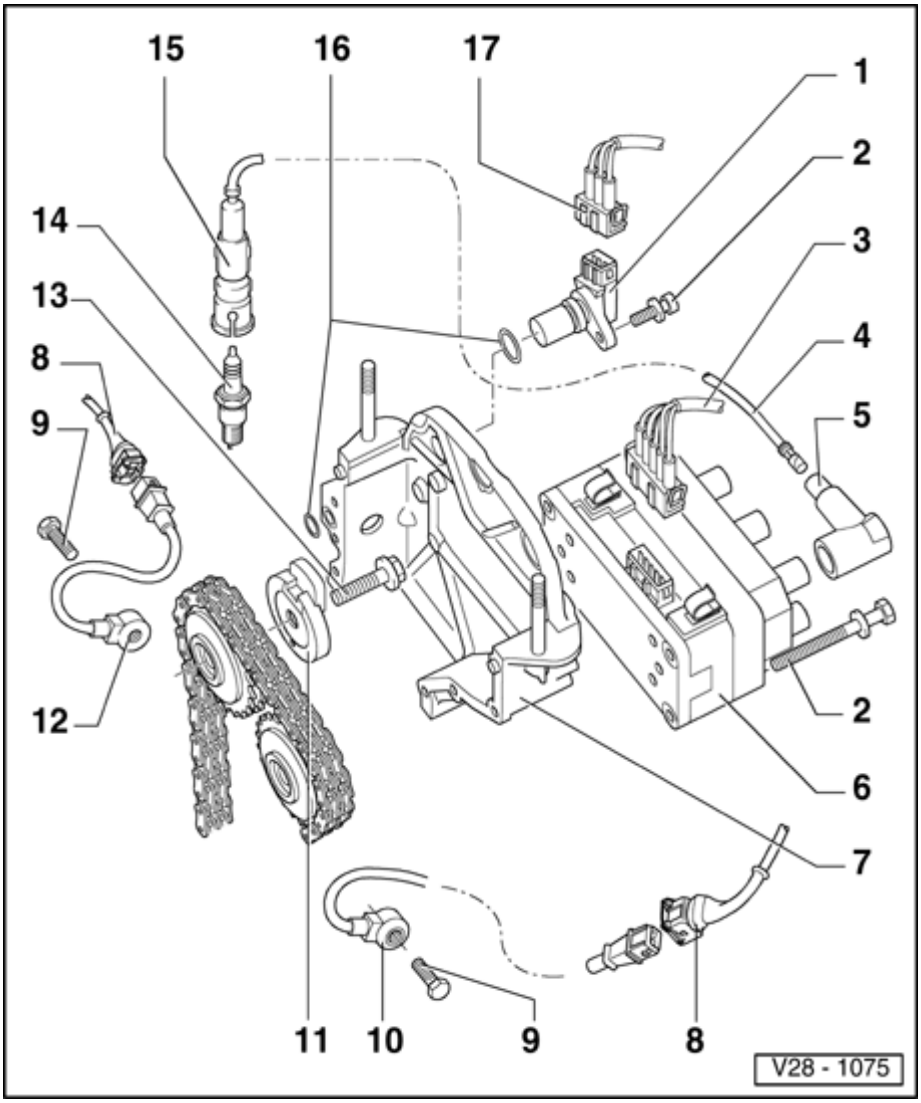

7 - Camshaft sprocket cover

- Removing and installing

⇒ *Repair Manual, 2.8 Liter VR6 2V Engine Mechanical, Engine Code(s): AAA, Repair Group 15, Cylinder head, removing and installing*

8 - Connector

- 3-pin

9 - 20 Nm (15 ft lb)

- Tightening torque influences function of Knock Sensor

10 - Knock Sensor (KS) 2 - G66-*

- Installation position: cylinder block intake side

11 - Sensor wheel

- For Camshaft Position (CMP) sensor -G40-
- Contact surface on camshaft sprocket must be dry
- If the sensor wheel has been removed, check timing after installing:

⇒ *Repair Manual, 2.8 Liter VR6 2V Engine Mechanical, Engine Code(s): AAA, Repair Group 13*

28-4

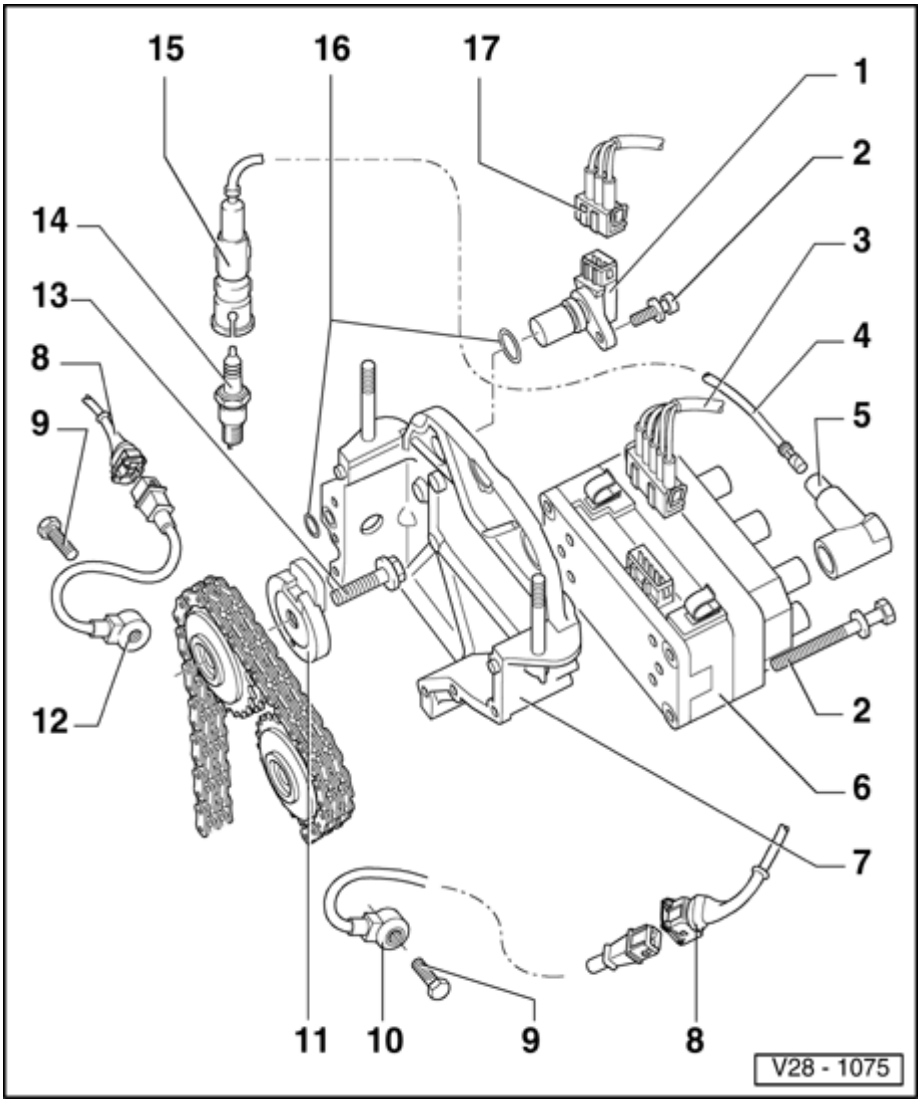

12 - Knock Sensor (KS) 1 - G61-*

- Installation position: cylinder block exhaust side

13 - 100 Nm (74 ft lb)

- To remove and install counter-hold with 24 mm OJ wrench on camshaft
- Oil bolt head contact surface

14 - Spark plug

- 25 Nm (18 ft lb)
- Remove and install with tool 3122B
- Type and electrode gap ⇒ Page 28-7 , spark plugs, technical data

15 - Spark plug connector

- Use 3277 to disconnect and connect
- Resistance: 4-6 kΩ

16 - O-ring

- Replace if damaged

17 - Connector

- 3-pin
- Camshaft Position (CMP) sensor -G40-

28-5

Safety precautions

WARNING!

Be alert when working on or near the engine. igh ignition secondary voltage can cause serious personal injury and damage vehicle components.

- ***DO NOT touch or disconnect ignition system wires when the engine is running or being cranked at starting RPM.***
- ***DO NOT operate the starter if the fuel injectors have been removed.***

Be sure the ignition is switched OFF, when:

- ***Disconnecting ignition wires***
- ***Disconnecting fuel injection system wiring***
- ***Connecting or disconnecting test equipment leads***
- ***Disconnecting the battery***
- ***Washing the engine or engine compartment.***

BEFORE cranking the engine at starting RPM (such as for compression testing) disable the ignition and fuel injection systems:

- ***Disconnect 5-pin connector to ignition coil (arrow).***
- ***Disconnect harness connectors from all fuel injectors.***
- ***After the work is completed, erase Diagnostic Trouble Code (DTC) memory.***

28-6

CAUTION!

BEFORE disconnecting the battery:

- ***Stop the engine.***
- ***Be sure the ignition is switched OFF (also applies when connecting the battery). Failure to do so may damage the Engine Control Module (ECM).***
- ***Be sure of the proper radio code (for vehicles equipped with coded anti-theft radio).***

Be sure the battery negative (-) cable is disconnected, when:

- ***Working on the electrical system***
- ***Resistance (spot) welding or electric arc welding anywhere on the vehicle.***

When connecting and disconnecting electrical test equipment (LED voltage tester, multimeter, etc.):

- ***Be sure the ignition is switched OFF.***
- ***Use correct adapters from the VW 1594 connector test kit.***

For any work affecting the Engine Control Module (ECM):

- ***BEFORE disconnecting the ECM harness connector, switch the ignition OFF and WAIT at least 0 seconds. Failure to do so may damage the ECM.***
- ***DO NOT connect any outside voltage source to stimulate an output signal at the ECM.***

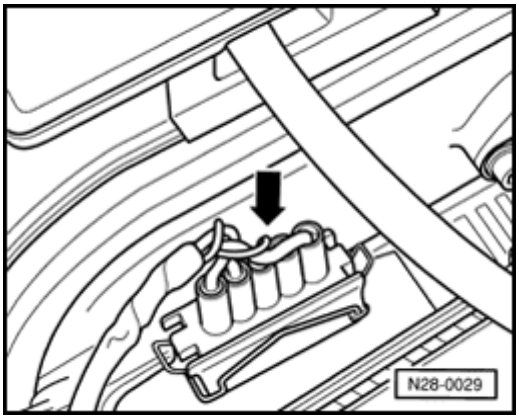

Technical data, spark plugs

Engine code		AAA
Ignition timing [1]		
	Checking	⇒ Page 28-8
Firing order		1-5-3-6-2-4
Spark plugs [2]		
	VW/Audi	101 000 035 AB
	Manufacturer s designation	BKR 5 EKU
	Electrode gap	0.7 mm (0.028 in.) [3]
	Tightening torque	25 Nm (18 ft lb)

[1] Not adjustable

[2] Use tool 3277 to disconnect and connect spark plug connector. Remove and install spark plugs with tool 3122B

[3] Gap between Ground (GND) electrode and center electrode

28-8

Ignition timing, checking

Special tools, testers and auxiliary items

- VAG 1551/1552 scan tool with VAG 1551/3 adapter cable

Test conditions

- Electrical consumers switched off (radiator coolant fan must not run during the check)
- Air conditioner switched off

Test sequence

- Engine running at idle

- Connect VAG 1551/1552 scan tool and select "Engine Electronics" address word 01 ⇒ Page 01-7 .

Rapid data transfer **HELP**
Select function

Indicated on display

- Press buttons -0- and -8- to select "Read Measuring Value Block" function 08 and press -Q- button to confirm input.

Read Measuring Value Block **HELP**
Input display group number

Indicated on display

- Press buttons -0-, -1- and -0- to input display group 010 and press -Q- button to confirm input.

Read Measuring Value Block **10** →
1 2 3 4

Indicated on display (1-4 = display fields)

28-9

- Check the ignition specifications (display fields 3 and 4).

	Display fields			
	1	2	3	4
Display group 010: Ignition 1				
Display	xxx RPM	xx.x ms	**xx.x ∠°**	**xx.x ∠°**
Indicated	Engine speed	Engine load	**Ignition angle (mapped value)**	**Ignition angle**
Working range	650 - 6000 RPM	0.0 - 25.0 ms	**0.0 - 50.0 ∠° BTDC**	**0.0 - 40.0 ∠° BTDC**
Specification	650 - 750 RPM	1.5 - 2.5 ms	**11.0 - 13.0 ∠° BTDC**	**Max. ±2.0 ∠° deviation from display field 3**
	-	-	**Test conditions:** ♦ Intake air temperature max. 50° C **If the specification is not attained ⇒ Page 24-68 , checking throttle valve control module**	

- Read the readiness code ⇒ Page 01-31 . If DTC memory has been erased, verify repair via appropriate display group ⇒ Page 01-33 , Readiness code, creating.

- Press → button.

- Press buttons -0- and -6- to select "End Output" function 06 and press -Q- button to confirm input.

28-10

Misfire recognition, checking

Special tools, testers and auxiliary items

- VAG 1551/1552 scan tool with VAG 1551/3 adapter cable

Test sequence

- Engine running at idle

- Connect VAG 1551/1552 scan tool and select "Engine Electronics" address word 01 ⇒ Page 01-7 .

Rapid data transfer **HELP**
Select function

Indicated on display

- Press buttons -0- and -8- to select "Read Measuring Value Block" function 08 and press -Q- button to confirm input.

Read Measuring Value Block **HELP**
Input display group number

Indicated on display

- Press buttons -1-, -1- and -0- to input display group 110 and press -Q- button to confirm input.

Read Measuring Value Block **110** →
1 2 3 4

Indicated on display (1-4 = display fields)

- Check the specification for misfire recognition (display fields 2-4):

	Display fields			
	1	2	3	4
Display group 110: Misfire recognition 1				
Display	x.xx ms	**xxx**	**xxx**	**xxxxxxxx**
Indicated	Engine load	**Misfire adversely affecting exhaust gas (total)**	**Misfire adversely affecting three way catalytic converter (total)**	**Misfire recognition status**
Working range	0.00 - 25.00 ms	**-**	**-**	**-**
Specification	1.00 - 3.00 ms	**0**	**0**	**00000000**
	-	**If specification is not attained ⇒ Page 28-12 , evaluating display group 110**		

- Read the readiness code ⇒ Page 01-31 . If DTC memory has been erased, verify repair via appropriate display group ⇒ Page 01-33 , Readiness code, creating.

- Press → button.

- Press buttons -0- and -6- to select "End Output" function 06 and press -Q- button to confirm input.

Evaluating display group 110

Display group: 110		
Display field: 2 3	**Possible malfunction cause**	**Malfunction elimination**
More than 25	♦ Ignition coil faulty ♦ Ignition wire faulty ♦ Spark plug faulty	- Check ignition coil ⇒ Page 28-27 - Check ignition system components ⇒ Page 28-1
	♦ Fuel injector faulty ♦ Fuel shortage	- Check fuel injectors ⇒ Page 24-115 - Check amount of fuel in tank

28-13

Ignition timing control, checking

Special tools, testers and auxiliary items

- VAG 1551/1552 scan tool with VAG 1551/3 adapter cable

Test conditions

- Electrical consumers switched off (radiator coolant fan must not run during the check)
- Air conditioner switched off
- Engine oil temperature at least 80 °C (176 °F)

Test sequence

- Engine running at idle

- Connect VAG 1551/1552 scan tool and select "Engine Electronics" with address word 01 ⇒ Page 01-7 .

Rapid data transfer **Select function**	**HELP**	≺	Indicated on display

- Press buttons -0- and -8- to select "Read Measuring Value Block" function 08 and press -Q- button to confirm input.

Read Measuring Value Block **Input display group number**	**HELP**	≺	Indicated on display

- Press buttons -0-, -1- and -0- to input display group 010 and press -Q- button to confirm input.

28-14

Read Measuring Value Block 10 →

1 2 3 4

Indicated on display (1-4 = display fields)

- Check the ignition timing control specifications (display fields 1-4).

	Display fields			
	1	2	3	4
Display group 010: Ignition 1				
Display	**xxx RPM**	**xx.x ms**	**xx.x ∠°**	**xx.x ∠°**
Indicated	**Engine speed**	**Engine load**	**Ignition angle (mapped value)**	**Ignition angle**
Working range	**650 - 6000 RPM**	**0.0 - 25.0 ms**	**0.0 - 40.0 ∠° BTDC**	**0.0 - 40.0 ∠° BTDC**
Specification	**650 - 750 RPM**	**1.9 - 2.1 ms**	**11.0 - 13.0 ∠° BTDC**	**Max. ±2.0 ∠° deviation from display field 3**
	2480 - 2520 RPM	**1.7 - 1.9 ms**	**23.0 - 25.0 ∠° BTDC**	**Max. ±2.0 ∠° deviation from display field 3**
	-	**-**	**Test condition:** ♦ Intake air temperature max. 50° C **If the specification is not attained** ⇒ **Page 28-15** **, continuation**	

Continuation

- Checking operating modes ⇒ Page 24-60 .
- Checking throttle valve control module ⇒ Page 24-68 .
- Checking Knock Sensor (KS) and knock control ⇒ Page 28-19 .

If the specification is still not attained:

- Replace Engine Control Module (ECM) -J220- ⇒ Page 24-6 , item 3 .
- Read the readiness code ⇒ Page 01-31 . If DTC memory has been erased, verify repair via appropriate display group ⇒ Page 01-33 , Readiness code, creating.

28-16

Camshaft Position (CMP) sensor, checking

Special tools, testers and auxiliary items

- VAG 1598/18 test box
- Multimeter (Fluke 83 or equivalent)
- Connector test kit VW 1594
- Wiring diagram

Test sequence

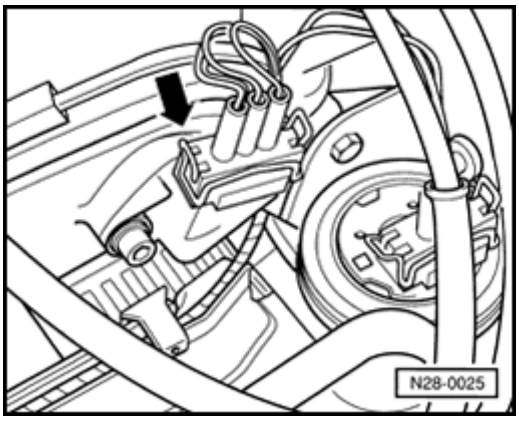

- Disconnect 3-pin connector from camshaft position sensor.
- Connect multimeter using test leads from VW 1594 to measure voltage at terminals 1 and 3.
- Switch ignition on.
- Measure voltage between terminals 1 and 3:

  Specification: 9-14.5 volts
- Switch ignition off.

28-17

If the specification is not attained:

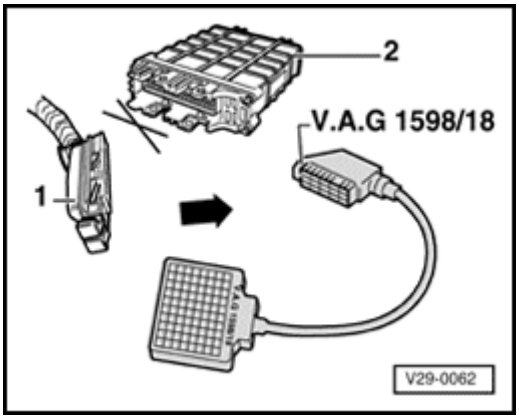

- Connect VAG 1598/18 test box to Engine Control Module (ECM) wiring harness (arrow).

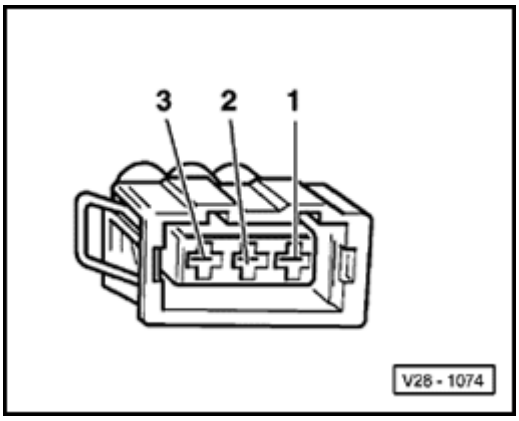

- Check wiring between test box and 3-pin connector for open circuit according to wiring diagram.
  - Terminal 2 and test box socket 44
  - Terminal 3 and test box socket 56

  Resistance: max. 1.5 ohms (Ω)
- Check wiring between 3-pin connector and relay panel for open circuit according to wiring diagram.
  - Terminal 1 and relay panel

  Resistance: max. 1.5 ohms (Ω)

- Additionally, check wires for short to one another:

  - Terminal 3 and test box socket 44

  - Terminal 2 and test box socket 56

  Specification: ∞ ohms (Ω)

If no wiring malfunction is detected and voltage was present between terminals 1 and 3:

- Replace distributor with Camshaft Position (CMP) sensor -G40- ⇒ Page 24-6 , item 3 .

If no wiring malfunction is detected and no voltage was present between terminals 1 and 3:

- Replace ECM -J220- ⇒ Page 24-6 , item 3 .

- Read the readiness code ⇒ Page 01-31 . If DTC memory has been erased, verify repair via appropriate display group ⇒ Page 01-33 , Readiness code, creating.

28-19

Knock Sensor (KS) and knock control, checking

Special tools, testers and auxiliary items

- VAG 1551/1552 scan tool with VAG 1551/3 adapter cable
- VAG 1598/18 test box
- Multimeter (Fluke 83 or equivalent)
- Connector test kit VW 1594
- Wiring diagram

Test sequence

- Engine running at idle

- Connect VAG 1551/1552 scan tool and select "Engine Electronics" with address word 01 ⇒ Page 01-7 .

Rapid data transfer **Select function**	**HELP**	≺	Indicated on display - Press buttons -0- and -8- to select "Read Measuring Value Block" function 08 and press -Q- button to confirm input.
Read Measuring Value Block **Input display group number**	**HELP**	≺	Indicated on display - Press buttons -0-, -4- and -5- to input display group 045 (cylinders 1-4), or press buttons -0-, -4- and -6- to input display group 046 (cylinders 5 and 6), and press -Q- button to confirm input.

28-20

Read Measuring Value Block **45** →

1 2 3 4

Indicated on display (1-4 = display fields)

Note:

The check must be carried out during a test drive as the knock control is only active with an engine load exceeding 3 ms.

- Carry out a test drive and observe the knock control specifications on display (second technician necessary).

	Display fields			
	1	2	3	4
Display group 045: Knock control				
Display	**xx.xx ∠°**	**xx.xx ∠°**	**xx.xx ∠°**	**xx.xx ∠°**
Indicated	**Ignition angle correction cylinder 1**	**Ignition angle correction cylinder 2**	**Ignition angle correction cylinder 3**	**Ignition angle correction cylinder 4**
Working range	**0.0 - 15.0∠°**	**0.0 - 15.0∠°**	**0.0 - 15.0∠°**	**0.0 - 15.0∠°**
Specification	**0.0 - 12.0∠°**	**0.0 - 12.0∠°**	**0.0 - 12.0∠°**	**0.0 - 12.0∠°**
	If specification is not attained ⇒ Page 28-21 , evaluating display group 045 and 046			

- Read the readiness code ⇒ Page 01-31 . If DTC memory has been erased, verify repair via appropriate display group ⇒ Page 01-33 , Readiness code, creating.
- Press → button.
- Press buttons -0- and -6- to select "End Output" function 06 and press -Q- button to confirm input.

Evaluating display group 045 and 046

Display group: 045 **Display field: 1-4**	**Possible malfunction cause**	**Malfunction elimination**
Display group: 046 **Display field: 1-2**		
All cylinders more than 12 ∠ °	♦ Knock Sensor (KS) faulty	- Continuation ⇒ Page 28-22
	♦ Connector corroded	
	♦ Knock sensor not correctly torqued	- Loosen knock sensor and torqued to 20 Nm (15 ft lb)
	♦ Attached components on engine loose	- Tighten attached components
	♦ Poor fuel quality	- Change type of fuel
One cylinder deviates greatly from the others	♦ Connector corroded	- Continued ⇒ Page 28-22
	♦ Engine damage	- Check compression pressure: ⇒ *Repair Manual, 2.8 Liter VR6 2V Engine Mechanical, Engine Code(s): AAA, Repair Group 13*
	♦ Attached components on engine loose	- Tighten attached components

Continuation

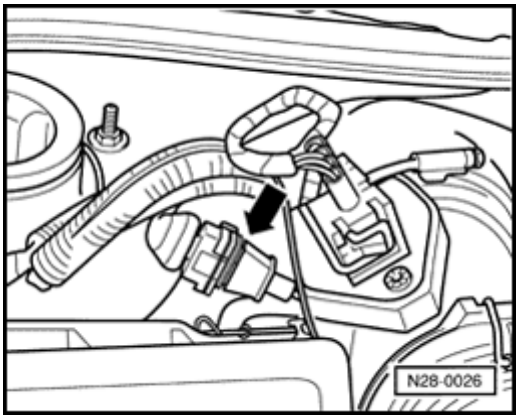

- Separate white 3-pin connector to Knock Sensor (KS) 1 -G61- (arrow).

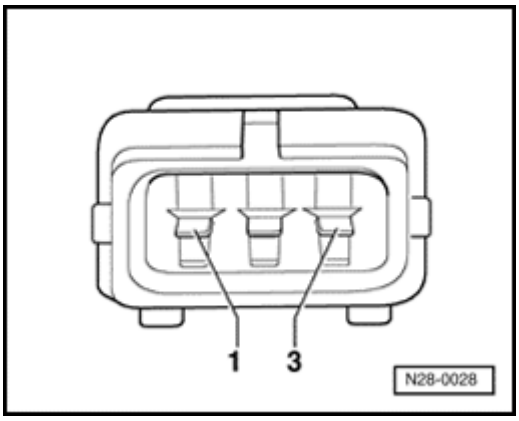

- Measure resistance between terminals 1 and 2, 1 and 3 and 2 and 3 on KS connector.

  Specification: ∞ ohms (Ω)

28-23

Additionally, check wires for short to one another.

Terminal 3 and test box socket 34

Terminal 3 and test box socket 33

Terminal 2 and test box socket 34

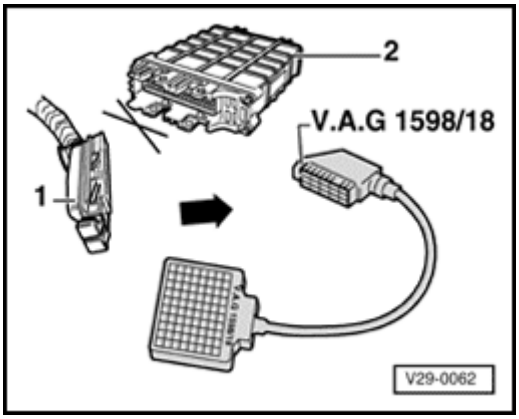

- Connect VAG 1598/18 test box to ECM wiring harness (arrow).

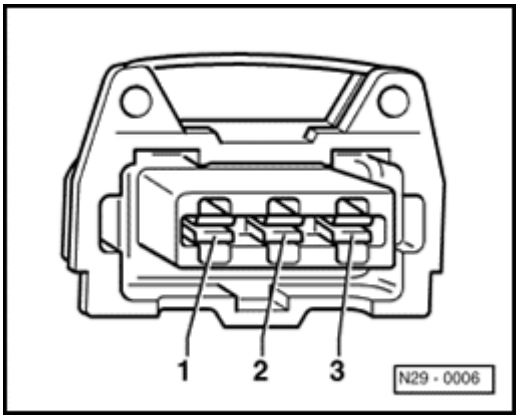

- Check wiring between test box and white 3-pin connector for open circuit according to wiring diagram.

Terminal 1 and test box socket 34

Terminal 2 and test box socket 33

Terminal 3 and test box socket 56

Resistance: max. 1.5 ohms (Ω)

Specification: ∞ ohms (Ω)

If no wiring malfunction is detected:

- Loosen knock sensor and tighten again to 20 Nm (15 ft lb).

If the malfunction is still present (malfunction again in DTC memory):

- Replace Knock Sensor (KS) 1 -G61-.

- Read the readiness code ⇒ Page 01-31 . If DTC memory has been erased, verify repair via appropriate display group ⇒ Page 01-33 , Readiness code, creating.

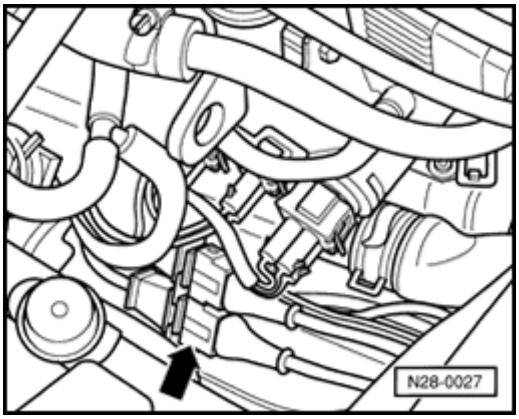

- Separate black 3-pin connector to Knock Sensor (KS) 2 -G66- (arrow).

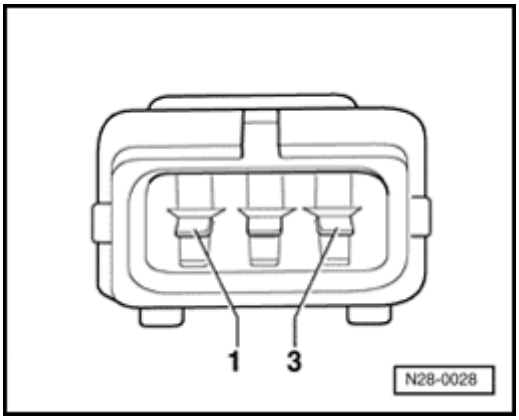

- Measure resistance between terminals 1 and 2, 1 and 3 and 2 and 3 on KS connector.

  Specification: ∞ ohms (Ω)

28-25

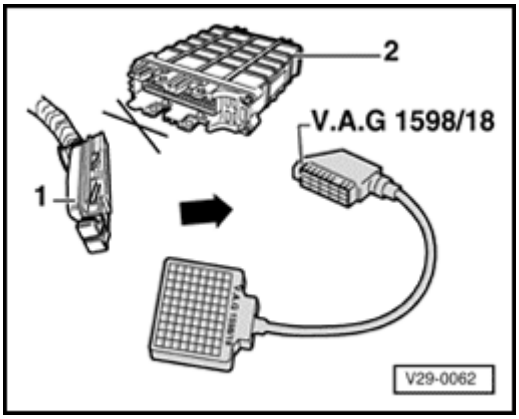

- Connect VAG 1598/18 test box to ECM wiring harness (arrow).

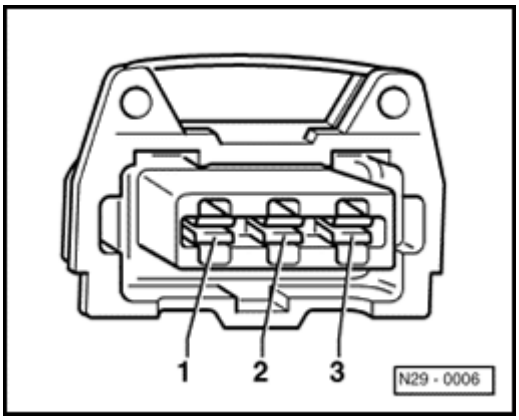

- Check wiring between test box and black 3-pin connector for open circuit according to wiring diagram.

Terminal 1 and test box socket 57

- Terminal 2 and test box socket 33
- Terminal 3 and test box socket 56

Resistance: max. 1.5 ohms (Ω)

- Additionally, check wires for short to one another.

Terminal 3 and test box socket 57

- Terminal 3 and test box socket 33
- Terminal 2 and test box socket 57

Specification: ∞ ohms (Ω)

28-26

If no wiring malfunction is detected:

- Loosen knock sensor and tighten again to 20 Nm (15 ft lb).

If the malfunction is still present (malfunction again in DTC memory):

- Replace Knock Sensor (KS) 2 -G66-.

- Read the readiness code ⇒ Page 01-31 . If DTC memory has been erased, verify repair via appropriate display group ⇒ Page 01-33 , Readiness code, creating.

28-27

Ignition coil, checking

Special tools, testers and auxiliary items

- Multimeter (Fluke 83 or equivalent)
- VAG 1527B voltage tester
- Connector test kit VW 1594

Test sequence

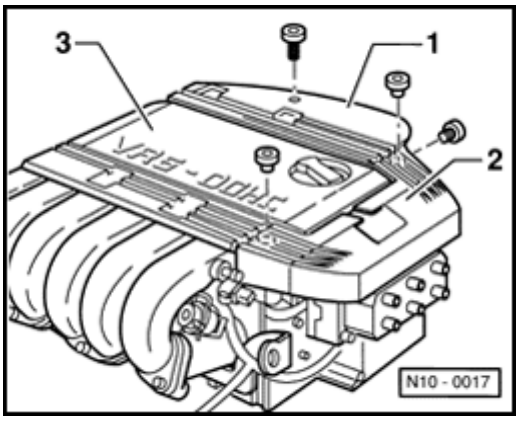

- Disconnect ignition wires at ignition coil and remove wire guide -2-.

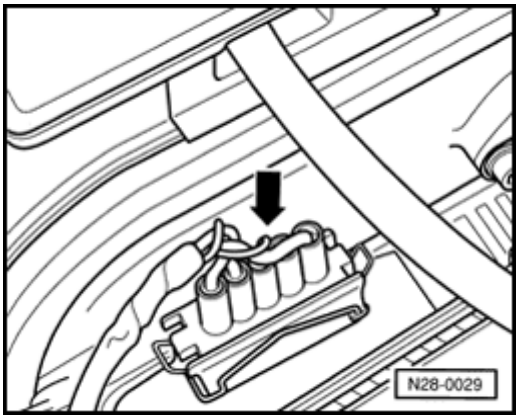

Checking voltage supply

- Disconnect 5-pin connector at ignition coil -N152- (arrow).

28-28

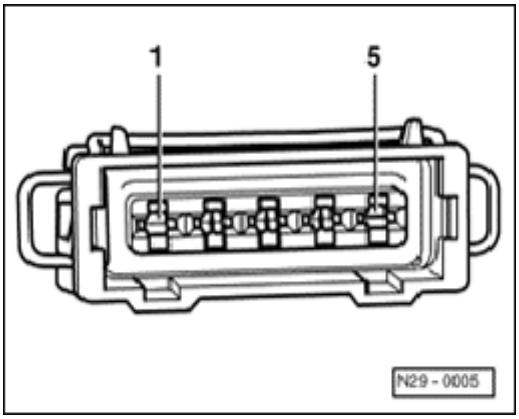

- Connect multimeter using test leads from VW 1594 to measure voltage at connector terminals 1 and 5.
- Switch ignition on.
- Measure voltage between terminals1 and 5.

  Specification: 9-14.5 volts
- Switch ignition off.

If the specification is not attained:

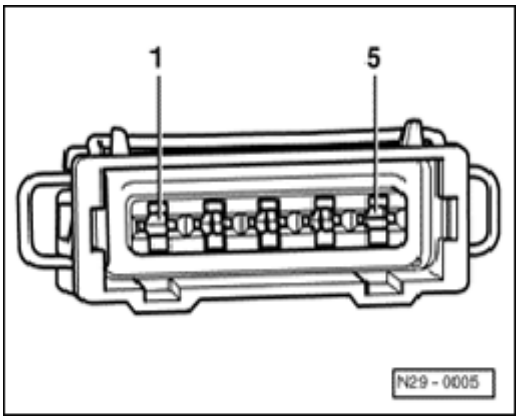

- Check wiring between 5-pin connector terminal 1 and Ground (GND) according to wiring diagram.

  Resistance max. 1.5 ohms (Ω)
- Check wiring between 5-pin connector terminal 5 and relay panel for open circuit according to wiring diagram.

  Resistance: max. 1.5 ohms (Ω)

28-29

Checking activation

- Remove fuse 18.

WARNING!

During the following test do not touch the terminals of the ignition coil or test leads.

- Switch ignition off.

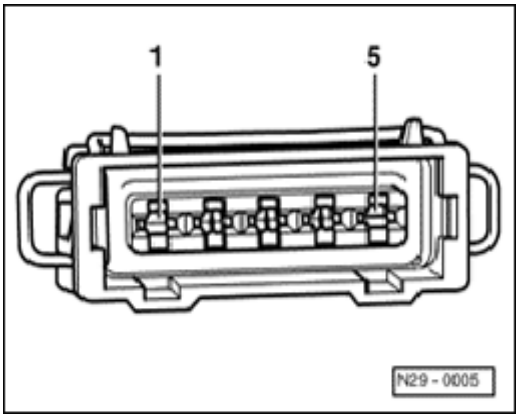

- Connect VAG 1527B voltage tester with test leads from VW 1594 to terminals of disconnected 5-pin connector.
  - Terminals 5 and 2 (ignition output 1)
  - Terminals 5 and 3 (ignition output 3)
  - Terminals 5 and 4 (ignition output 2)
- Operate starter and check ignition signal from Engine Control Module (ECM).

• LED must flicker

- Switch ignition off.

If the LED does NOT flicker:

- Replace ECM -J220- ⇒ Page 24-6 .

28-30

If LED flickers:

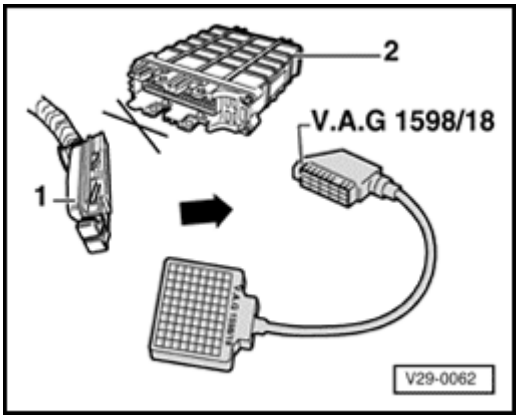

- Connect VAG 1598/18 test box to ECM wiring harness (arrow).

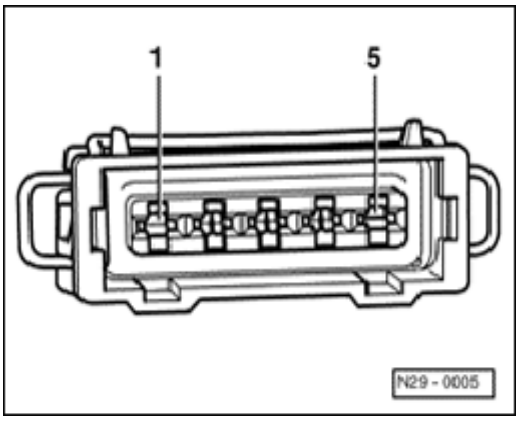

- Check wiring between test box and 5-pin connector for open circuit according to wiring diagram.
  - Terminal 2 and test box test box socket 8
  - Terminal 3 and test box test box socket 60
  - Terminal 4 and test box test box socket 52

  Resistance: max. 1.5 ohms (Ω)

28-31

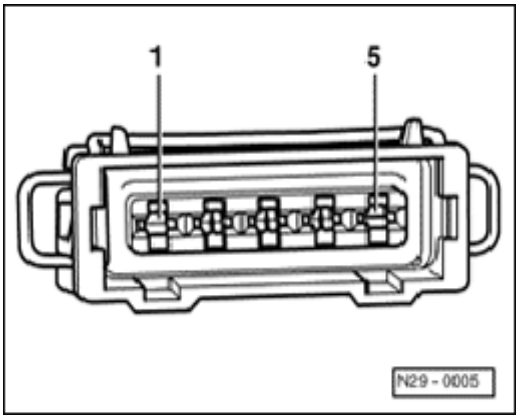

- Additionally check wiring for short to one another.
  - Terminal 2 and test box test box socket 60
  - Terminal 2 and test box test box socket 52
  - Terminal 3 and test box test box socket 52

  Specification: ∞ ohms (Ω)

If no wiring malfunction is detected and voltage was present between terminals 1 and 5:

- Replace ignition coil -N152-.

Volkswagen Passat

Official Factory Repair Manual

1996, 1997
Gasoline, Turbo Diesel, TDI
4-cylinder and VR6, including wagon

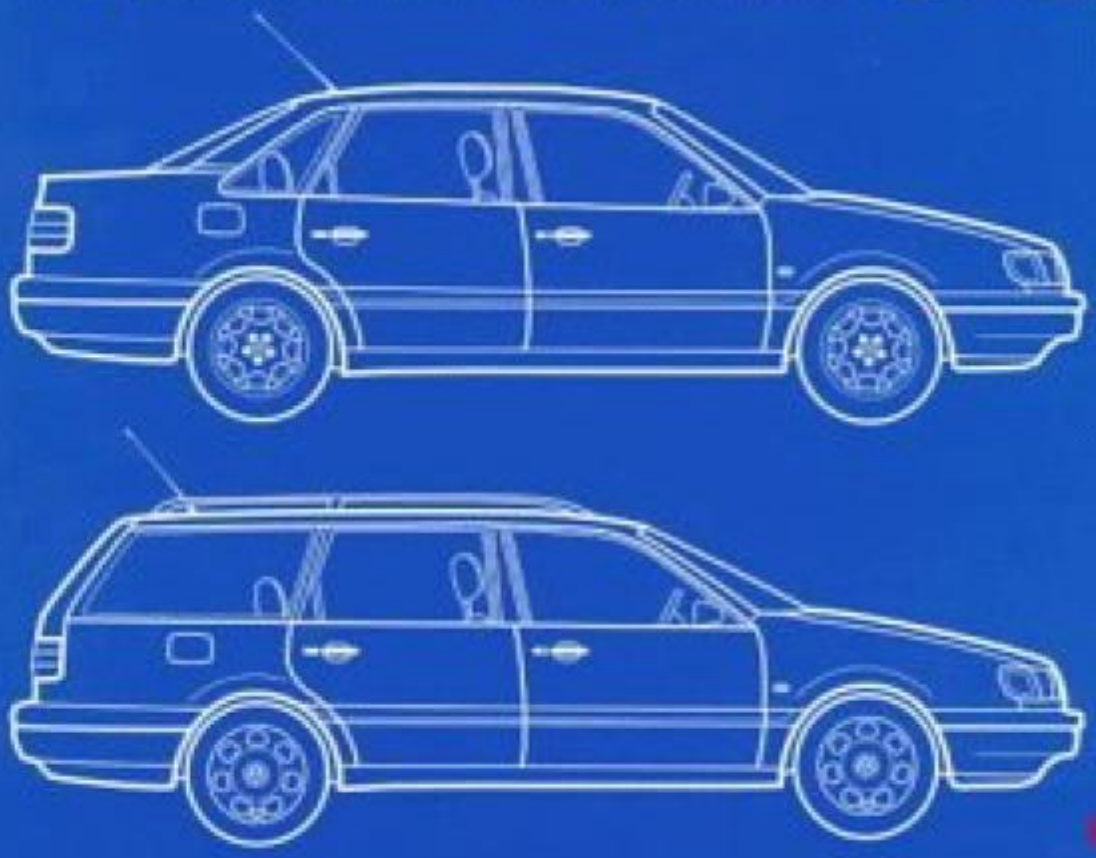

Robert Bentley

PASSAT '95 - '97

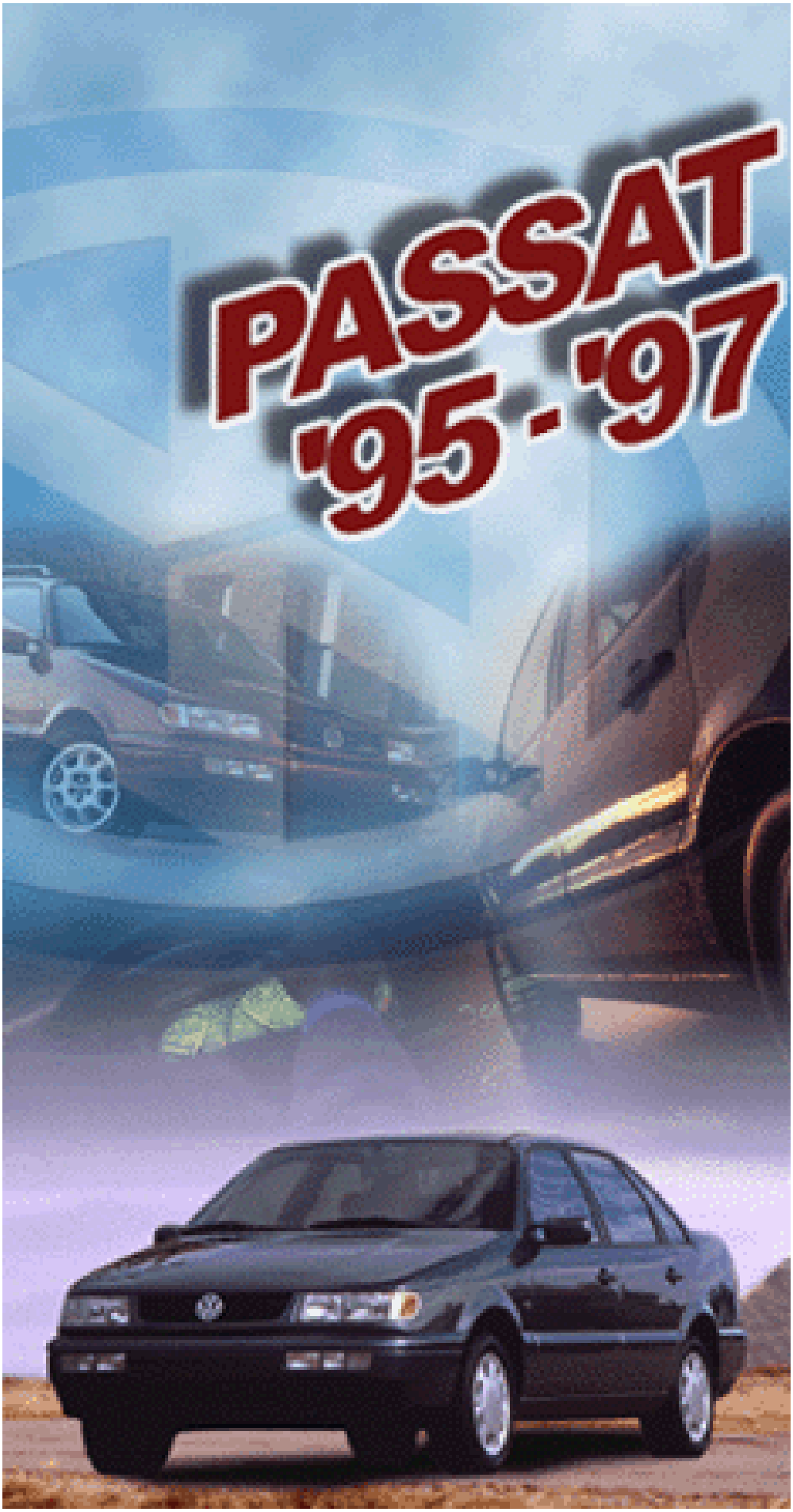

2.8 Liter VR6 2V Generic Scan Tool Fuel Injection Ignition, Engine Code(s): AAA m.y. 1996-1997

20 - Fuel Supply

Fuel supply system components, removing and installing
Fuel tank with attachments and fuel filter, removing and installing
Safety precautions when working on fuel supply
Rules of cleanliness
Fuel Pump (FP), removing and installing
Fuel pump, checking

EVAP canister system
EVAP canister system, components, removing and installing (vehicles without Leak Detection Pump)
EVAP canister system components, removing and installing (vehicles with Leak Detection Pump)
Fuel tank ventilation, checking (vehicles without Leak Detection Pump)
EVAP canister system for proper seal, checking (vehicles with Leak Detection Pump)
Evaporative Emission (EVAP) canister purge regulator valve 1, checking
Leak Detection Pump (LDP), checking

Accelerator Pedal (AP) cable, adjusting
Vehicles with manual transmission
Vehicles with automatic transmission

24 - Multiport Fuel Injection (MFI)

Motronic fuel injection and ignition system
Component locations overview
General Notes on Fuel Injection
Fuel injection system components, removing and installing
Fuel distributor with fuel injectors, disassembling and assembling
Throttle valve control module, removing and installing
Air filter, disassembling and assembling
Safety precautions
Rules of cleanliness
Technical data

Engine components,checking
Oxygen sensor heater for oxygen sensor before Three Way Catalytic Converter (TWC), checking

Oxygen sensor heater for oxygen sensors behind Three Way Catalytic Converter (TWC), checking
Mass Air Flow (MAF) sensor, checking
Throttle valve control module, checking
Engine Coolant Temperature (ECT) sensor, checking
Intake Air Temperature (IAT) Sensor, checking
Engine speed (RPM) sensor, checking
Fuel injectors, checking
Fuel pressure regulator and residual pressure, checking
Intake system for leaks (false air), checking

Function tests
Oxygen sensor and oxygen sensor regulation before catalytic converter, checking
Oxygen sensor and oxygen sensor regulation behind catalytic converter, checking

Engine Control Module (ECM)
Function
Voltage supply for Engine Control Module (ECM), checking
Engine Control Module (ECM), replacing

Additional signals, checking
Speed signal, checking

26 - Exhaust system, Emission controls

Exhaust system components, removing and installing
Exhaust manifold, front exhaust pipe and catalytic converter with attachments
Mufflers with mounts
Three Way Catalytic Converter (TWC), checking

Secondary Air Injection (AIR) system
Function
Secondary Air Injection (AIR) system components, removing and installing
Secondary Air Injection (AIR) system, checking for proper seal
Secondary Air Injection (AIR) valve, checking
Secondary Air Injection (AIR) pump motor, checking
Combination valve, checking

28 - Ignition/Glow plug system

Ignition, servicing
General notes on ignition system
Ignition components, removing and installing
Safety precautions
Test Data, Spark Plugs
Camshaft Position (CMP) sensor, checking
Knock sensors, checking
Ignition coil, checking

38 - Automatic Transmission - Gears, Hydraulic controls

Transmission control electrical components, removing and installing, checking
Safety precautions
Electrical/electronic components and component locations
Multi-Function Transmission Range (TR) Switch, checking
Transmission Vehicle Speed Sensor (VSS), checking
Vehicle Speed Sensor (VSS), checking
Transmission Fluid Temperature Sensor, checking
Solenoid valves in valve body, checking

Transmission Control Module (TCM)
Function
Transmission Control Module (TCM), replacing

ST - Generic Scan Tool

General information for On Board Diagnostic (OBD)
Characteristics of On Board Diagnostic (OBD)
On Board Diagnostic (OBD), technical data
Diagnostic tester, connecting
Test box, connecting for wiring test

Diagnostic function, selecting
Address word 33 - On-Board Diagnostic (OBD)
Diagnostic mode 1: Check measured values
Diagnostic mode 2: Check operating conditions
Diagnostic mode 3: Check DTC Memory
Diagnostic mode 4: Reset/erase diagnostic data
Diagnostic mode 5: Check output of oxygen sensor signals
Diagnostic mode 6: Check test results of components that are not continuously monitored
Diagnostic mode 7: Check test results
Diagnostic mode 8: Tank leak test

Readiness code
Function
Readiness code, reading
Readiness code, generating

DTC tables
SAE P0xxx-DTCs
SAE P1xxx-DTCs

Fuel supply system components, removing and installing

Note:

- *Hose connections are secured with screw-type clamps, spring-type clamps or tensioning clamps.*

- *Fuel hoses at engine must only be secured with spring-type clamps. The use of clamping collars or screw clamps is not permitted.*

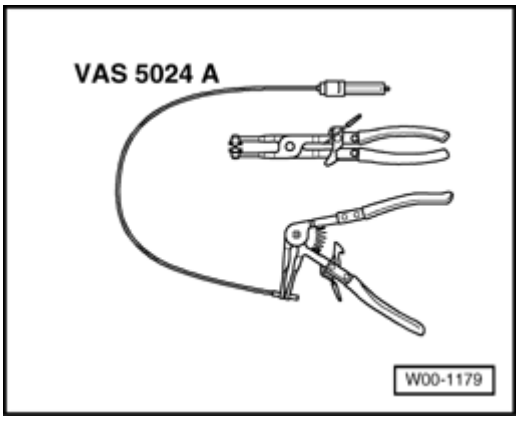

- *VAS 5024A spring-type clip pliers is recommended for installing spring clips.*

Fuel tank with attachments and fuel filter, removing and installing ⇒ Page 20-2 .

Observe safety precautions ⇒ Page 20-8 .

Observe rules for cleanliness ⇒ Page 20-10 .

EVAP canister system ⇒ Page 20-28 .

Adjusting accelerator pedal cable ⇒ Page 20-50 .

20-2

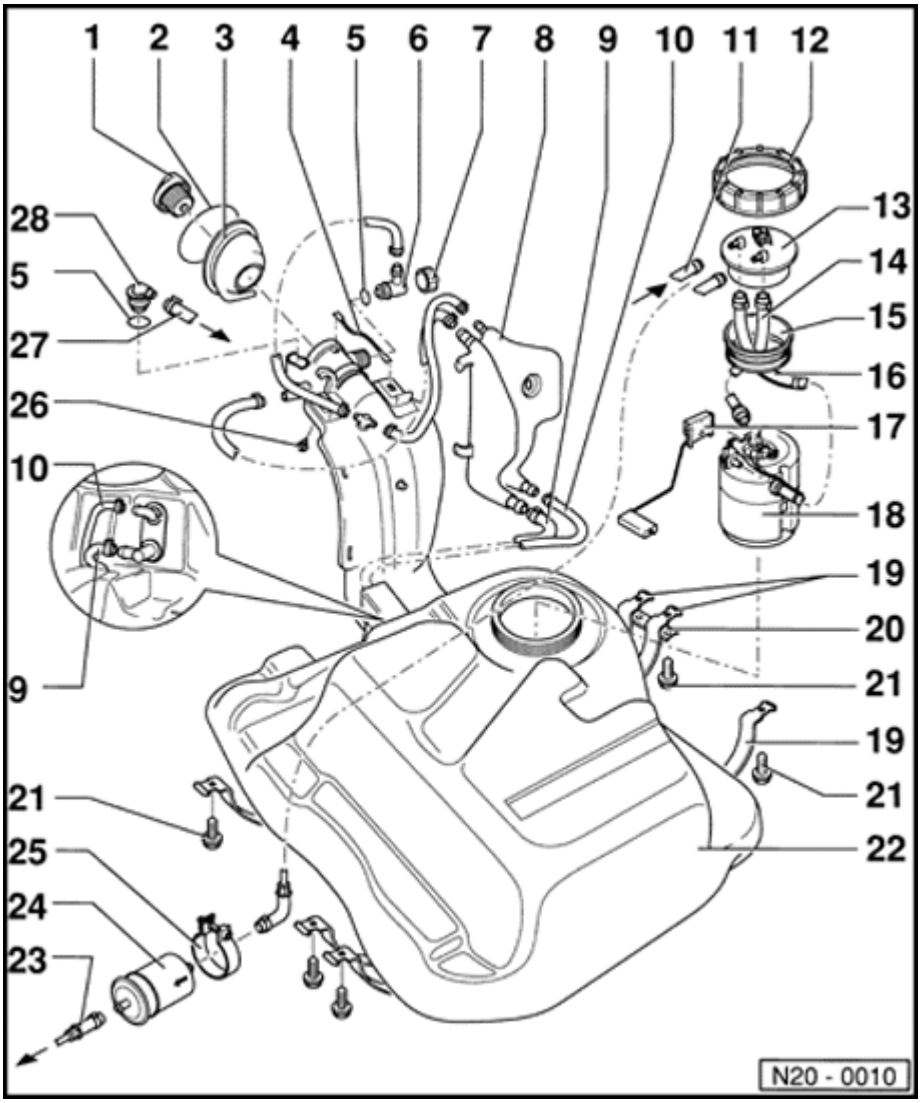

Fuel tank with attachments and fuel filter, removing and installing

Note:

Make sure the supply or return lines do not come into contact with the fuel tank after all work on the fuel pump or the fuel gauge (transfer of pump noise).

1 - Cap

- Replace seal if damaged

2 - Tensioning ring

3 - Rubber top

4 - Ground (GND) connection

- Check for secure fitting

20-3

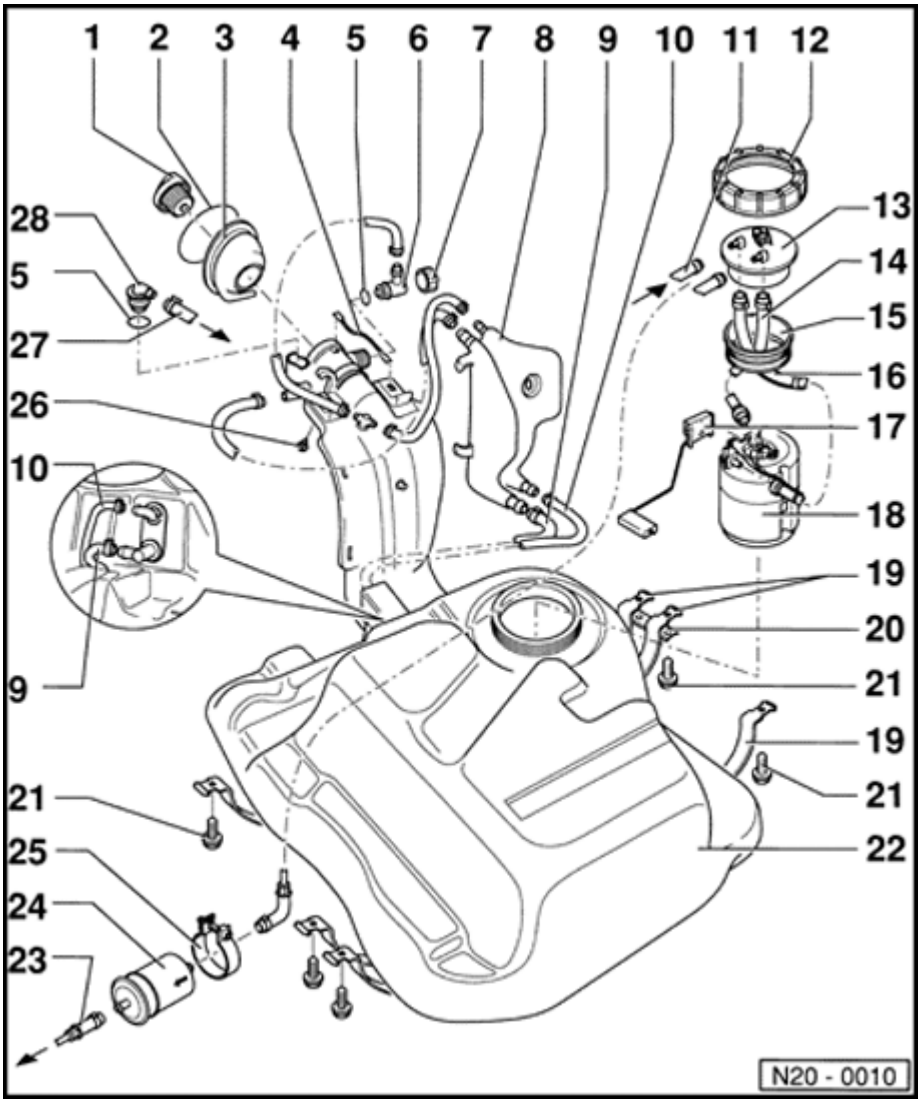

5 - O-ring

- Replace if damaged

6 - Bleeder valve

- Checking ⇒ Fig. 2

7 - Union nut, 60 Nm

8 - Expansion tank

- Version shown: Wagon
- For sedan, simpler expansion tank

9 - Vent line

- Filler ventilation
- Check for secure fitting

10 - Vent line

- Operating ventilation
- Only station wagon
- Check for secure fitting

20-4

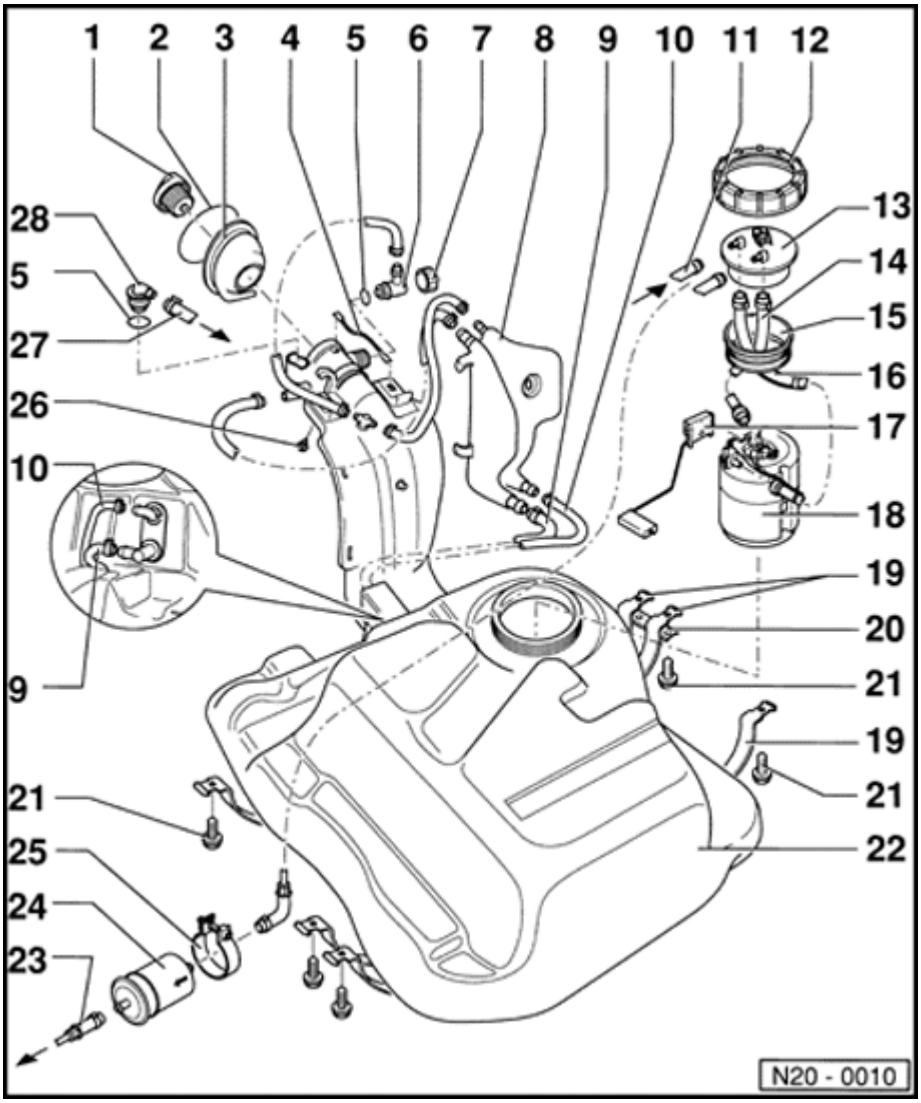

11 - Return hose

- Blue
- Check for secure fitting
- From fuel return line at fuel distributor ⇒ Page 24-12 , Item 5

12 - Union nut, 60 Nm

- Use wrench 3217 to remove and install

13 - Flange

- Note installation position at fuel tank ⇒ Fig. 1

14 - Supply hose

- Check for secure fitting

15 - Seal

- Replace if damaged
- To install, place into opening of fuel tank when dry
- Only coat with fuel when installing Fuel Pump (FP) flange

20-5

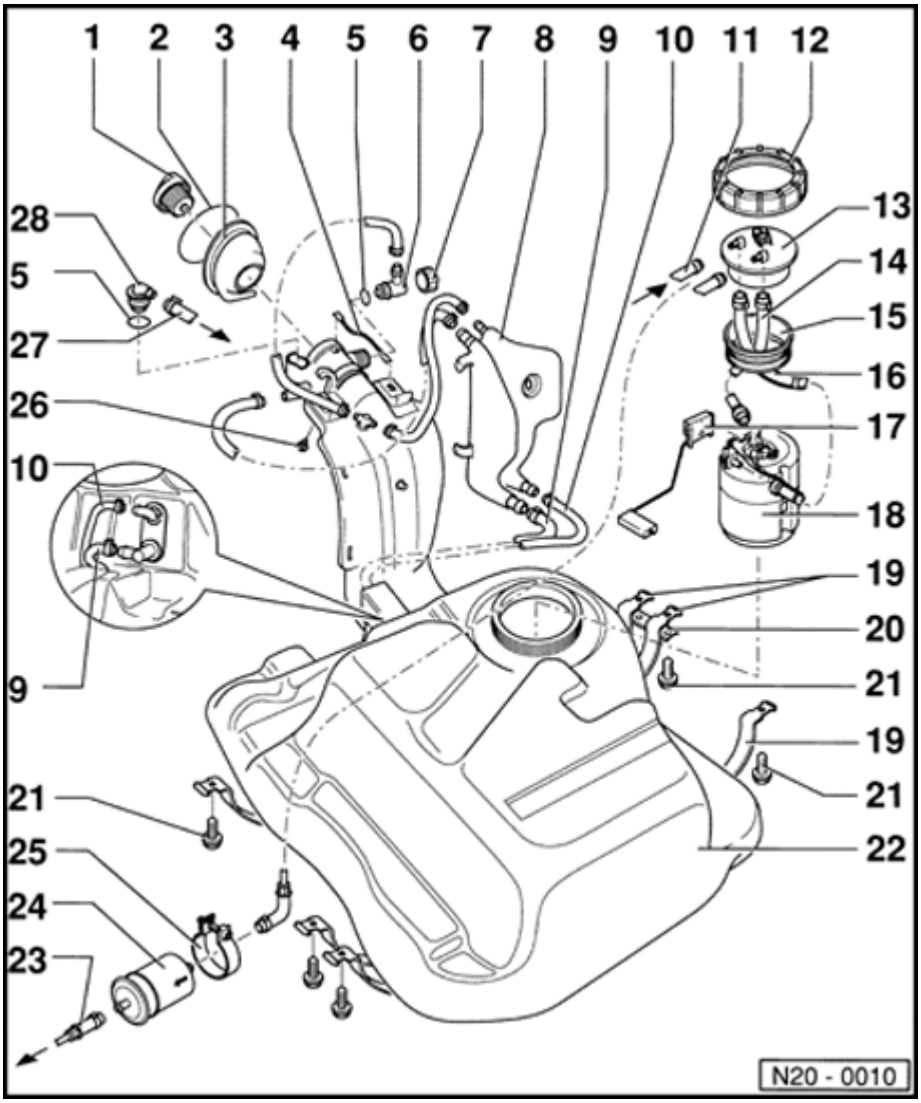

16 - Return hose

- Check for secure fitting

17 - Sender for fuel gauge - G-

18 - Fuel pump

- Removing and installing ⇒ Page 20-11
- Checking Fuel Pump (FP) ⇒ Page 20-15

19 - Tension strap

- Note varying lengths

20 - Bracket

- For tension straps

21 - 25 Nm

22 - Fuel tank

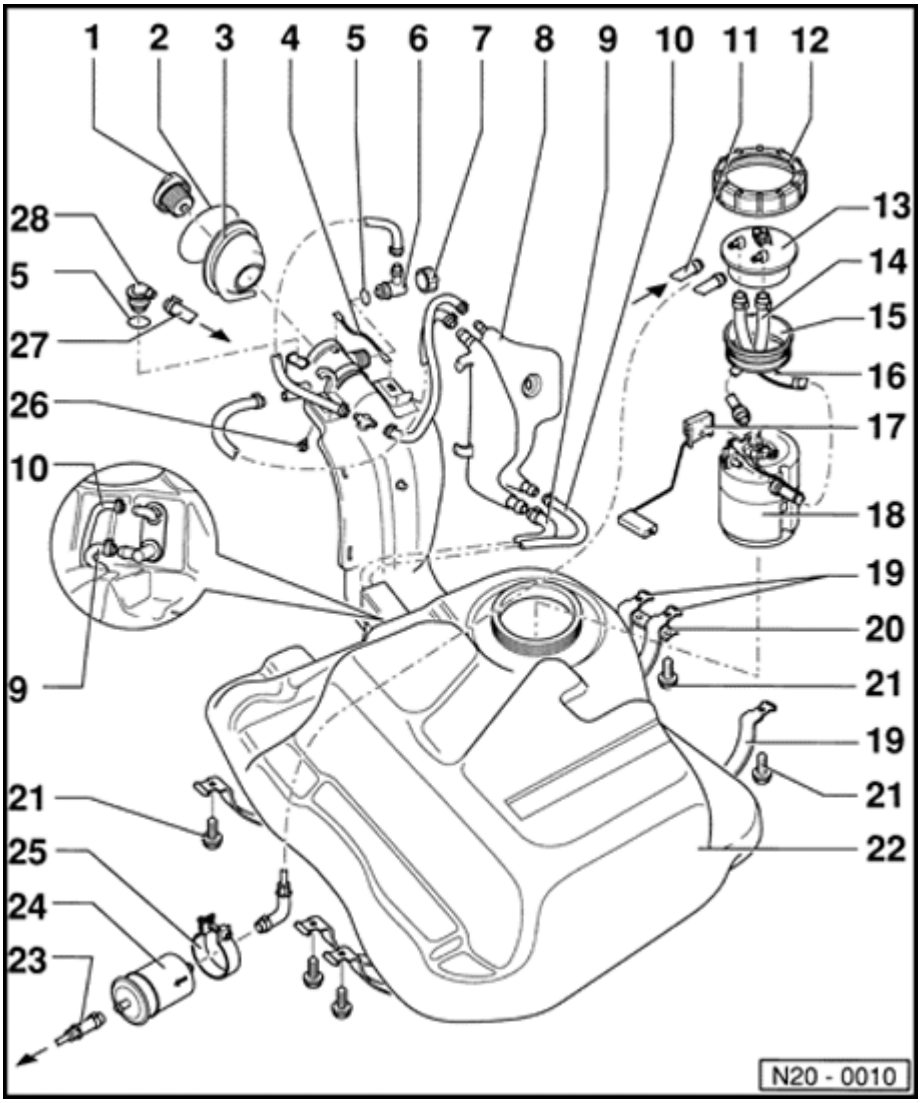

23 - Supply line

- Black
- Check for secure fitting
- To fuel supply line at fuel distributor ⇒ Page 24-12 , Item 4

24 - Fuel filter

- Installation position: Arrow points in direction of flow

25 - Screw clip

26 - 10 Nm

27 - Vent line

- Check for secure fitting
- To EVAP canister ⇒ Page 20-30 , item no. 7

28 - Gravity valve

- To remove, unclip valve upward and lift out.
- Checking valve for throughput Valve vertical: Open, Valve tilted 45 ° : closed

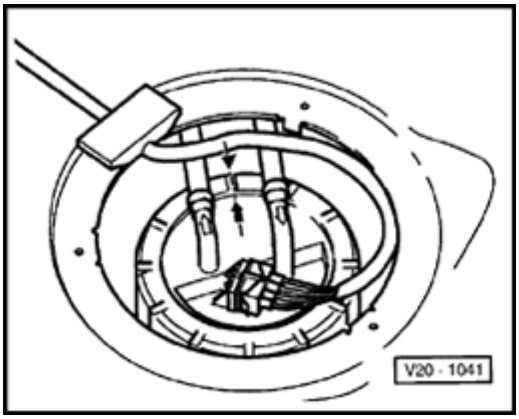

Fig. 1 Installation position of fuel pump flange

Marking on flange must align with marking on fuel tank.

Note:

After installing Fuel Pump (FP) unit flange, check whether supply, return and vent lines are still clipped in at fuel tank.

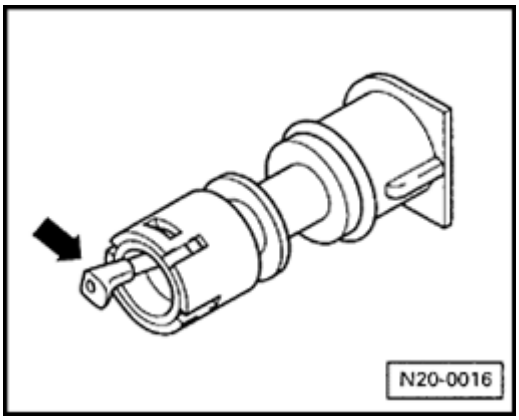

Fig. 2 Checking bleeder valve

Lever in rest position: closed

Lever pressed in direction of arrow: open

Safety precautions when working on fuel supply

CAUTION!

Observe the following for all installations, especially in engine compartment due to lack of room:

- ***Route lines of all types (e.g. for fuel, hydraulic, EVAP canister system, coolant and refrigerant, brake fluid, vacuum) and electrical wiring so that the original path is followed.***
- ***Watch for sufficient clearance to all moving or hot components.***
- ***Fuel system is under pressure! Before opening system, place rags around the connection point. Then release pressure by carefully loosening connection.***

Always observe the following when removing and installing the sender for fuel gauge or the Fuel Pump (FP) from partially filled fuel tanks.

20-9

- Before starting work, switch on exhaust extraction system and place an extraction hose close to the sensor opening in fuel tank to extract escaping fuel fumes. If no exhaust extraction system is available, a radial fan (as long as motor is not in air flow) with a displacement greater than 15 m^3/h can be used.

- Prevent gasoline from contacting skin! Wear fuel-resistant gloves!

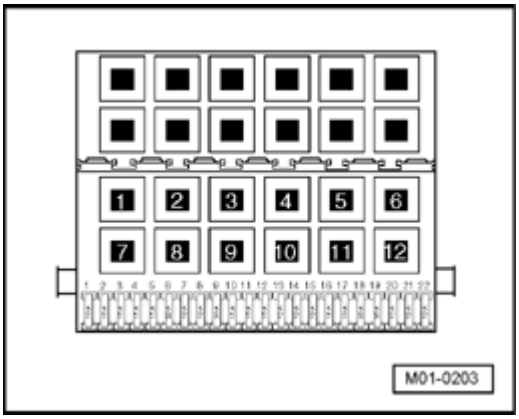

- For safety reasons, fuse no. 18 must be removed from fuse holder before opening fuel supply system.

Rules of cleanliness

When working on the fuel supply or fuel injection system, the following "5 rules of cleanliness" should be carefully observed:

- Thoroughly clean all connections and the surrounding area before disconnecting.
- Place parts that have been removed on a clean surface and cover. Use lint-free cloths only!
- Carefully cover over opened components or seal, if repairs are not carried out immediately.
- Only install clean components:

  Only unpack replacement parts immediately prior to installation.

  Do not use parts that have been stored loose (in tool boxes etc.)
- When the system is open:

  Avoid working with compressed air if possible.

  Do not move vehicle unless absolutely necessary.

20-11

Fuel Pump (FP), removing and installing

Recommended special tools and equipment

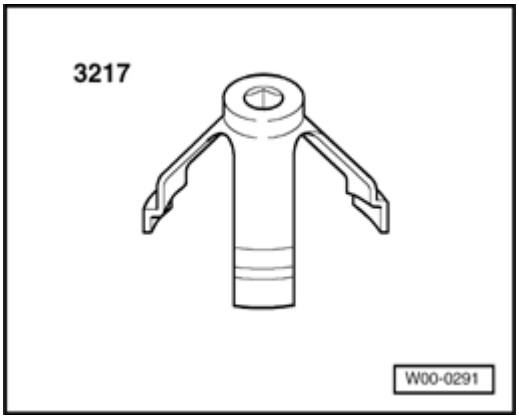

- 3217 ring nut spanner

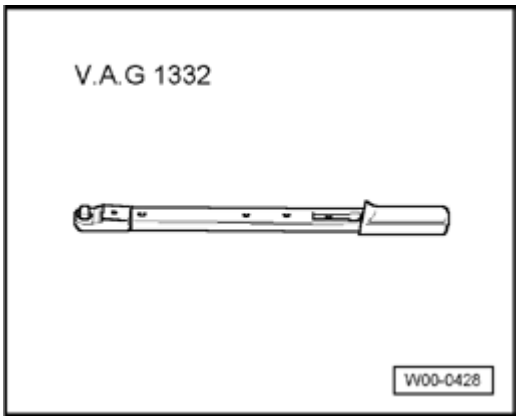

- V.A.G1332 torque wrench (40 to 200 Nm)

Observe safety precautions ⇒ Page 20-8 .

Observe rules for cleanliness ⇒ Page 20-10 .

Requirements

- Parking brake must be engaged or else daylight driving lights will be switched on.
- Ignition switched off.
- Fuel tank must be drained.

Removing

- First determine whether a coded radio is installed. In this case, determine anti-theft coding.
- Switch ignition off and disconnect Battery Ground (GND) strap.
- Remove luggage compartment floor cover.

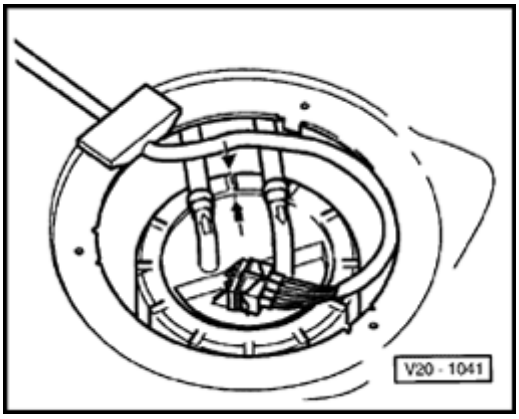

- Disconnect connector as well as supply and return line from flange.

WARNING!

- ***The fuel or fuel lines in fuel system can become very hot (danger of scalding)!***
- ***In addition, the fuel system is under pressure! Before opening the system, place rags around the connection area and release pressure by carefully loosening the connection!***
- ***Wear protective goggles and protective gloves when working on the fuel system!***

- Seal off lines so that no dirt will get into fuel system.
- Use 3217 ring nut spanner to remove union nut.
- Pull flange and sealing ring from opening of fuel tank
- Loosen fuel pump from bayonet connection by turning toward left and remove.

Note:

When replacing Fuel Pump (FP) unit, empty old Fuel Pump (FP) unit before disposing.

Installing

Installation of the fuel pump is the reverse order of removal.

Note:

- *When inserting Fuel Pump (FP) unit into fuel tank, be sure not to bend sender for fuel gauge.*
- *Only coat seal with fuel when installing Fuel Pump (FP).*
- *Installed position of flange for Fuel Pump (FP) unit ⇒ Page 20-7 , ⇒ Fig. 1 .*
- *Make sure fuel lines are securely fastened.*
- *After installing Fuel Pump (FP) unit, check whether supply, return and vent lines are still clipped in at fuel tank.*

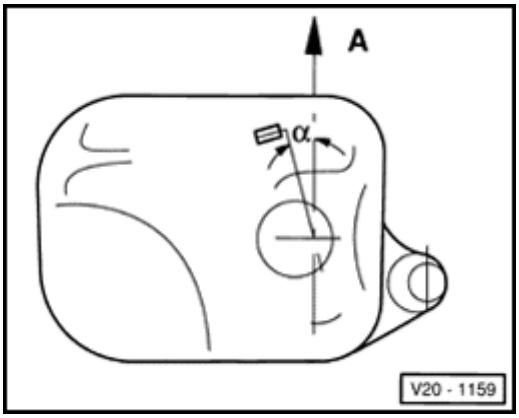

When the Fuel Pump (FP) unit is installed correctly, the floater of sender for fuel gauge faces in driving direction -A- as follows:

Front Wheel Drive (FWD) vehicles

Station wagon α = 5 to 10°

Sedan α = 70 to 75°

- Erase DTC memory of Engine Control Module (ECM) ⇒ Page ST-25 , Diagnostic mode 4: Reset/erase diagnostic data.
- Generate readiness code ⇒ Page ST-50 .

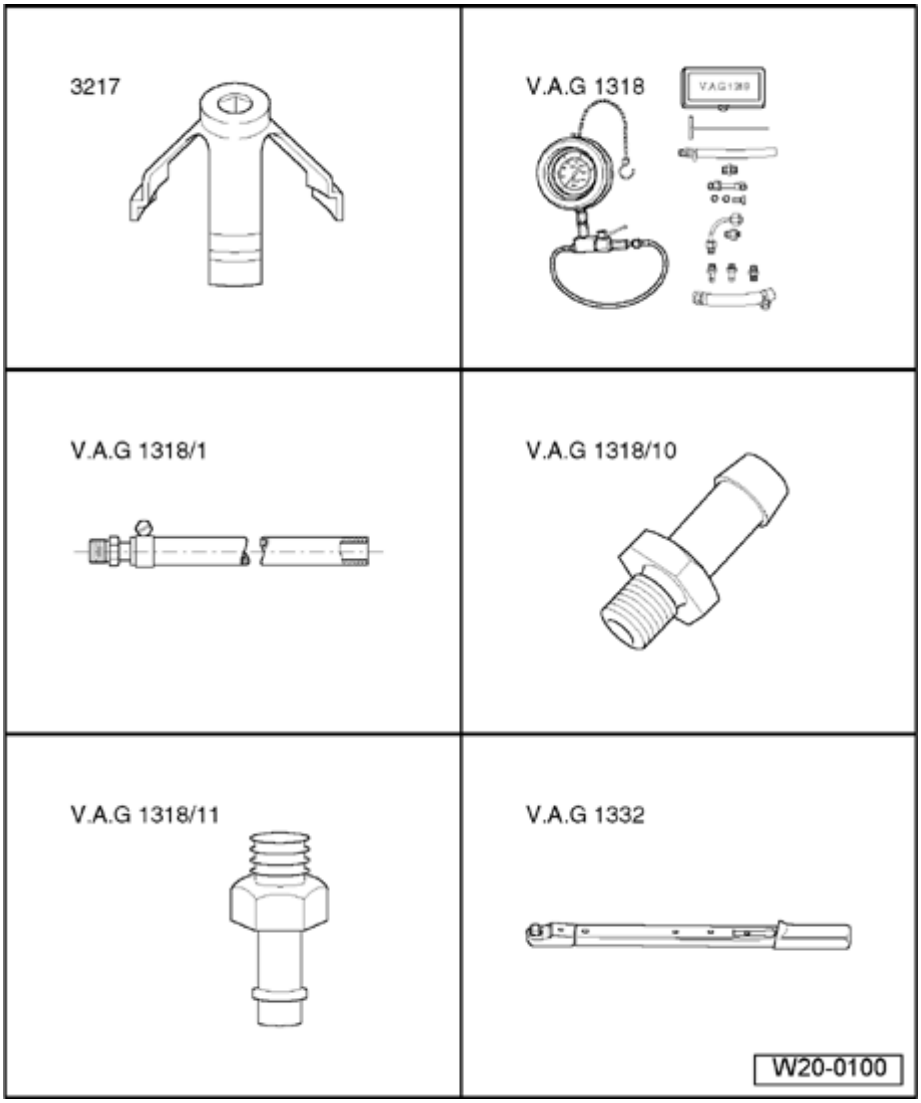

Fuel pump, checking

Recommended special tools and equipment

- 3217 ring nut spanner
- V.A.G 1318 pressure gauge
- V.A.G 1318/1 hose
- V.A.G 1318/10 adapter
- V.A.G 1318/11 adapter
- V.A.G 1332 torque wrench (40 to 200 Nm)

20-16

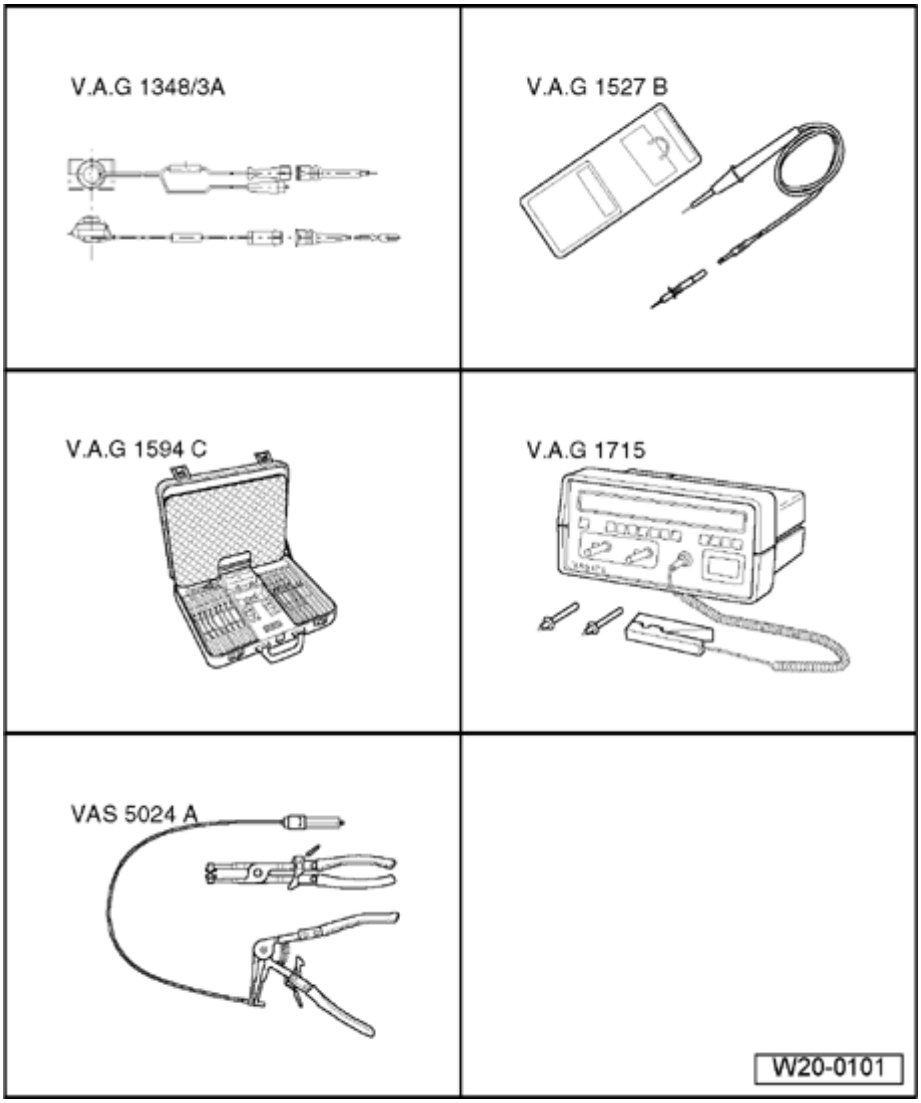

- V.A.G 1348/3A remote control with V.A.G 1348/3-2 adapter cable
- V.A.G 1527B voltage tester
- V.A.G 1594 C connector test kit
- V.A.G 1715 multimeter
- VAS 5024A assembly tool for spring-type clamps

Without illustration:

- Measuring container
- Wiring diagram

20-17

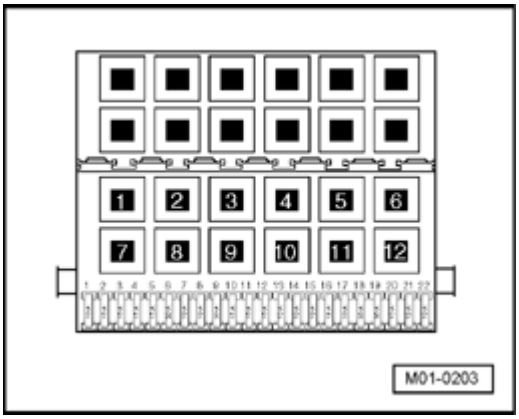

Test requirements

- Fuse no. 18 for Fuel Pump (FP) must be OK.
- Battery voltage must be at least 11.5 Volts.
- Ground (GND) connections between engine, transmission, and chassis must be OK.
- All electrical consumers such as, lights and rear window defroster must be switched off.
- Parking brake must be engaged or else daylight driving lights will be switched on.
- For vehicles with automatic transmission, selector lever must be in -P-.

Test sequence

- Switch on ignition.

Fuel Pump (FP) must briefly run audibly.

- Switch ignition off.

If Fuel Pump (FP) does not start up:

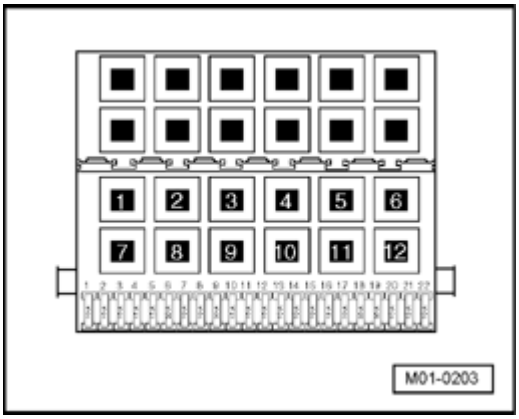

- Remove Fuel Pump (FP) Relay -J17- from relay carrier (relay position 12).

Note:

- *Remove battery Ground (GND) strap if tools are necessary for removal of relays or control modules from the relay carrier.*
- *Obtain radio code for radios with anti-theft coding before disconnecting battery.*
- *Do not use metallic tools to pry off relays from relay carrier. The terminals could conduct electricity.*

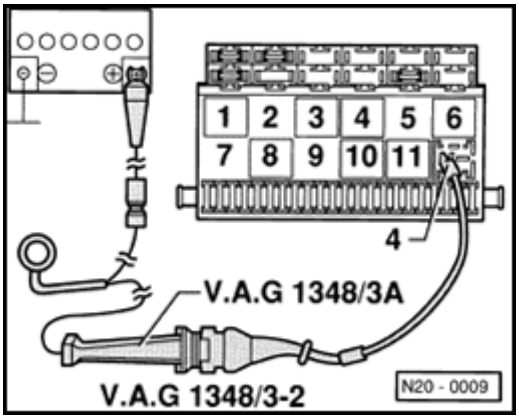

- Connect V.A.G 1348/3A remote control with V.A.G1348/3-2 remote control connection to terminal 4 and B+.
- Operate remote control.

If Fuel Pump (FP) runs:

- Check activation of Fuel Pump (FP) Relay -J17- according to wiring diagram:

⇒ *Electrical Wiring Diagrams, Troubleshooting & Component Locations*

If Fuel Pump (FP) does not run:

- Remove luggage compartment floor cover.

- Disconnect connector from flange on fuel tank.

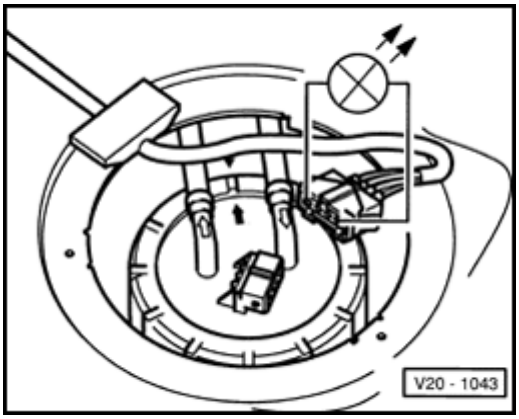

- Connect diode test lamp to the outer terminals of the connector.
- Operate remote control.

  LED must light up.

LED does not light up:

- Locate and repair open circuit using wiring diagram.

⇒ *Electrical Wiring Diagrams, Troubleshooting & Component Locations*

LED lights up (voltage supply OK):

- Remove fuel pump ⇒ Page 20-11 .
- Check whether electrical wires between flange and Fuel Pump (FP) are connected.

If there are no open circuits:

- Fuel Pump (FP) faulty, replace Fuel Pump (FP) ⇒ Page 20-11 , Fuel Pump (FP), removing and installing.

- Erase DTC memory of Engine Control Module (ECM) ⇒ Page ST-25 , Diagnostic mode 4: Reset/erase diagnostic data.

- Generate readiness code ⇒ Page ST-50 .

Checking fuel delivery

Test requirements

- Voltage supply OK

- V.A.G 1348/3A remote control connected

Test sequence

- Remove fuel filler cap from fuel filler tube.

- Disconnect fuel supply line from fuel rail.

20-21

WARNING!

- ***The fuel or fuel lines in fuel system can become very hot (danger of scalding)!***
- ***In addition, the fuel system is under pressure! Before opening the system, place rags around the connection area and release pressure by carefully loosening the connection!***
- ***Wear protective goggles and protective gloves when working on the fuel system!***

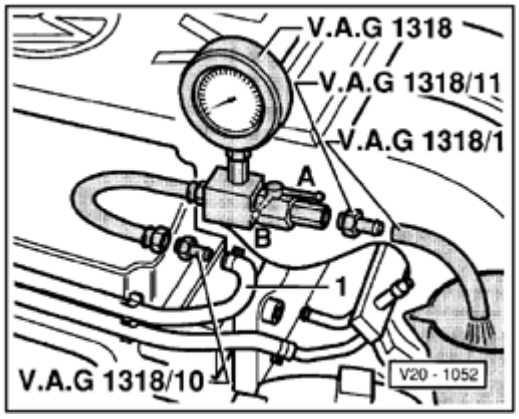

- Connect pressure gauge (V.A.G 1318) with adapter ((V.A.G 1318/10) to fuel supply line -1-.
- Connect V.A.G 1318/1 hose to V.A.G 1318/11 adapter of pressure gauge and hold in a measuring container.
- Open shut-off valve of pressure gauge. Lever will point in direction of flow -A-.

- Operate remote control. Slowly close shut-off valve until pressure gauge displays

  3 bar positive pressure is indicated.

  Do not change position of shut-off valve any more.

- Empty the measuring container.

- Delivery rate of Fuel Pump (FP) is dependant on battery voltage. Therefore, connect multimeter to vehicle battery using adapter cables.

- Operate remote control

  30 seconds long.

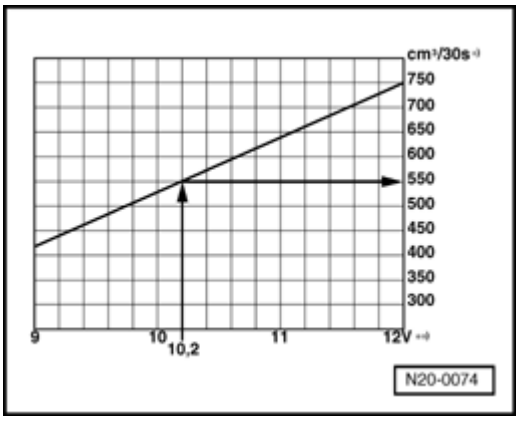

- Compare fuel quantity pumped with specified value.

*) Minimum delivery rate cm^3/30 s

**) Voltage at fuel pump with engine off and pump running (approx. 2 volts less than battery voltage).

Read-out example:

During test, a voltage of 12.5 Volts is measured at battery. Since the voltage at the pump is approx. 2 Volts less than battery voltage, there is a minimum delivery rate of 550 cm^3/30 s.

20-23

If minimum delivery rate is not obtained:

- Check fuel lines for possible restrictions (kinks) or clogging.

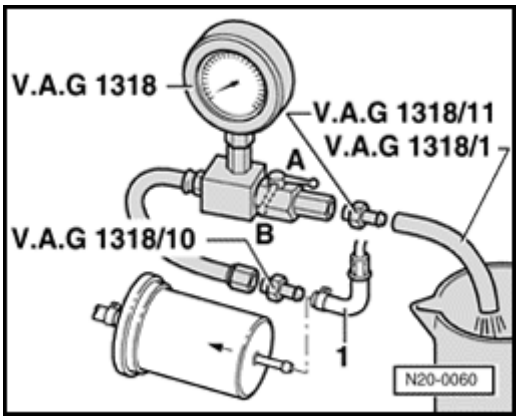

- Disconnect supply hose -1- from fuel filter input.

WARNING!

- ***The fuel or fuel lines in fuel system can become very hot (danger of scalding)!***
- ***In addition, the fuel system is under pressure! Before opening the system, place rags around the connection area and release pressure by carefully loosening the connection!***
- ***Wear protective goggles and protective gloves when working on the fuel system!***

- Connect pressure gauge (V.A.G 1318) to hose using adapter ((V.A.G 1318/10).
- Repeat test of delivery quantity.

If minimum delivery rate is now obtained:

- Replace fuel filter ⇒ Page 20-6 item 24 , removing and installing fuel tank with attachments and fuel filter

If minimum delivery rate is still not obtained:

- Remove fuel delivery unit ⇒ Page 20-11 and check filter strainer for dirt.

Only if no malfunctions have been found yet:

- Fuel Pump (FP) faulty, replace Fuel Pump (FP) unit ⇒ Page 20-11 , Fuel Pump (FP) unit, removing and installing.

- Erase DTC memory of Engine Control Module (ECM) ⇒ Page ST-25 , Diagnostic mode 4: Reset/erase diagnostic data.

- Generate readiness code ⇒ Page ST-50 .

Delivery rate has been obtained, but malfunctions are still suspected in the fuel supply (e.g. sporadic loss of fuel supply):

- Reconnect all disconnected fuel lines.

- Check current pick-up of Fuel Pump (FP) ⇒ Page 20-25 .

20-25

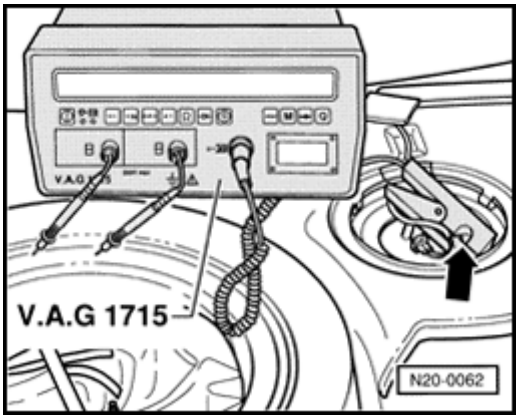

Current pick-up of Fuel Pump (FP), checking

- Connect multimeter with current probe to red/yellow wire of wiring harness.
- Start engine and let run at idle.
- Measure Fuel Pump (FP) current draw.

  Specified value: max. 8 amperes

Note:

If disturbance in fuel system is sporadic, test can also be performed during a road test, but a 2nd person is required.

If current draw is exceeded:

- Fuel Pump (FP) faulty, replace Fuel Pump (FP) unit ⇒ Page 20-11 , Fuel Pump (FP) unit, removing and installing.
- Erase DTC memory of Engine Control Module (ECM) ⇒ Page ST-25 , Diagnostic mode 4: Reset/erase diagnostic data.
- Generate readiness code ⇒ Page ST-50 .

Fuel Pump (FP) check-valve, checking

Test requirements

- Remote control connected
- Pressure gauge is still connected.

Test sequence

Note:

This test also checks the connections of the fuel supply line from Fuel Pump (FP) unit to connection point of pressure gauge for proper seal.

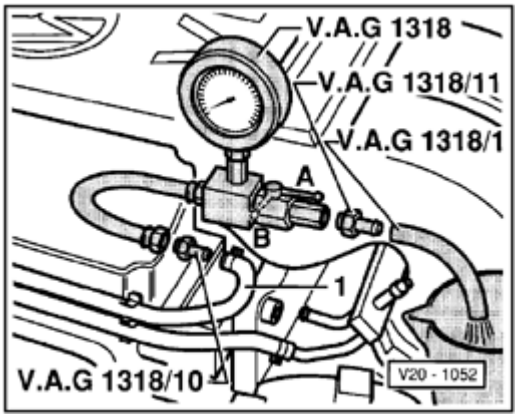

- Close pressure gauge shut-off valve (lever perpendicular to direction of flow).
- Operate remote control in short intervals until a positive pressure of approx. 3.0 bar has built up.
- If excess pressure is built up, reduce pressure by carefully opening shut-off valve.

WARNING!

Danger of spray when opening shut-off valve. old container in front of open connection on pressure gauge.

- Observe pressure drop on pressure gauge. After 10 minutes, pressure must not fall below

  2 bar within 10 minutes.

If pressure drops further:

- Check line connections for proper seal.

If no malfunctions are found in wires:

- Fuel Pump (FP) faulty, replace Fuel Pump (FP) unit ⇒ Page 20-11 , Fuel Pump (FP) unit, removing and installing.

- Re-connect all disconnected fuel lines.

- Erase DTC memory of Engine Control Module (ECM) ⇒ Page ST-25 , Diagnostic mode 4: Reset/erase diagnostic data.

- Generate readiness code ⇒ Page ST-50 .

EVAP canister system

Note:

- *Hose connections are secured with screw-type clamps, spring-type clamps or tensioning clamps.*
- *Always replace tensioning clamps with spring-type clamps or screw-type clamps.*
- *Fuel hoses at engine must only be secured with spring-type clamps. The use of clamping collars or screw clamps is not permitted.*
- *Components marked with * are tested via On Board Diagnostic (OBD) ⇒ Page ST-21 , Diagnostic mode 3: Check DTC memory.*
- *VAS5024A spring-type clip pliers is recommended for installing spring clips.*

Observe safety precautions ⇒ Page 20-8 .

Observe rules for cleanliness ⇒ Page 20-10 .

EVAP canister system components, removing and installing:

- Vehicles without Leak Detection Pump (LDP) ⇒ Page 20-29 ,
- Vehicles with Leak Detection Pump (LDP) ⇒ Page 20-32 .

Check fuel tank ventilation (vehicles without Leak Detection Pump) ⇒ Page 20-36 .

Check EVAP canister system for proper seal (vehicles with Leak Detection Pump) ⇒ Page 20-40 .

20-29

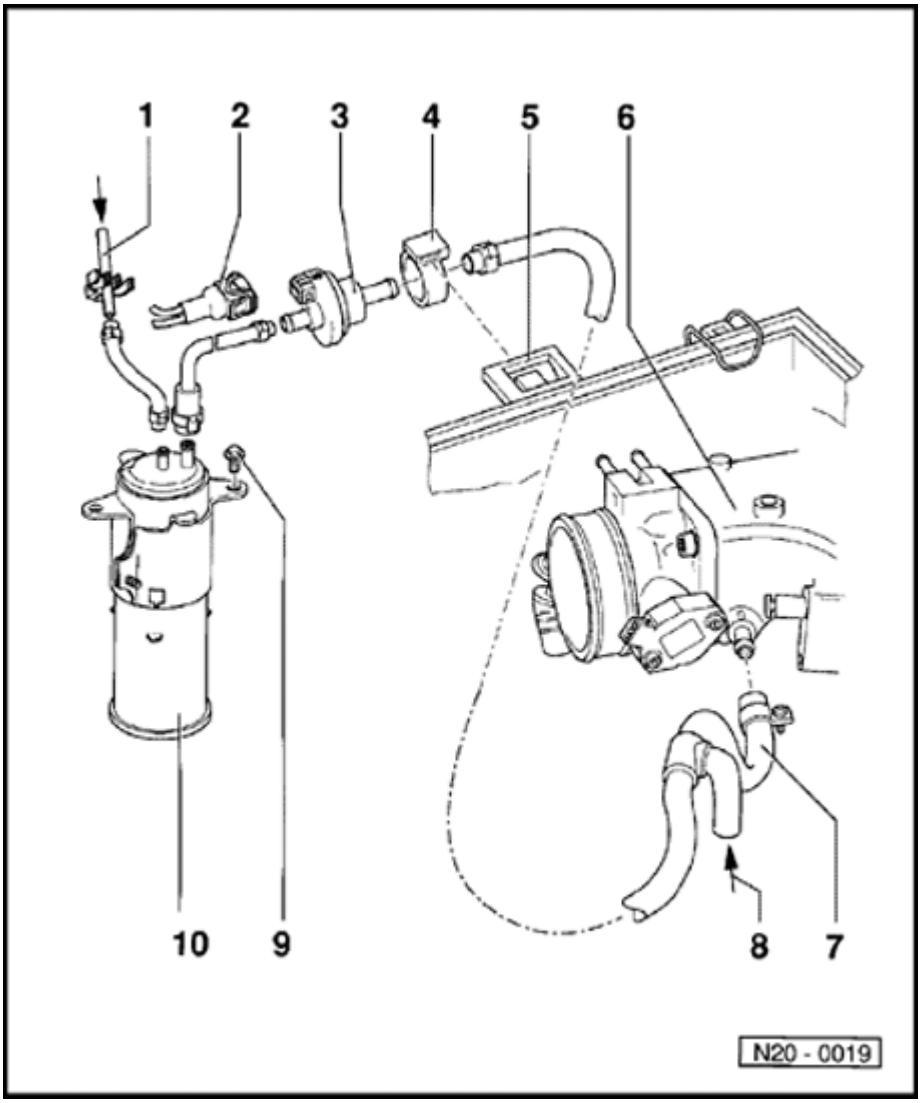

EVAP canister system, components, removing and installing (vehicles without Leak Detection Pump)

1 - Vent line

- From gravity valve at fuel tank ⇒ Page 20-6 , item 27

2 - Connector

- 2-pin

3 - Evaporative Emission (EVAP) Canister Purge Regulator Valve -N80-*

- Installation position: Arrow points in direction of flow
- Checking ⇒ Page 20-43

4 - Retaining ring

- For Evaporative Emission (EVAP) canister purge regulator valve -N80-

20-30

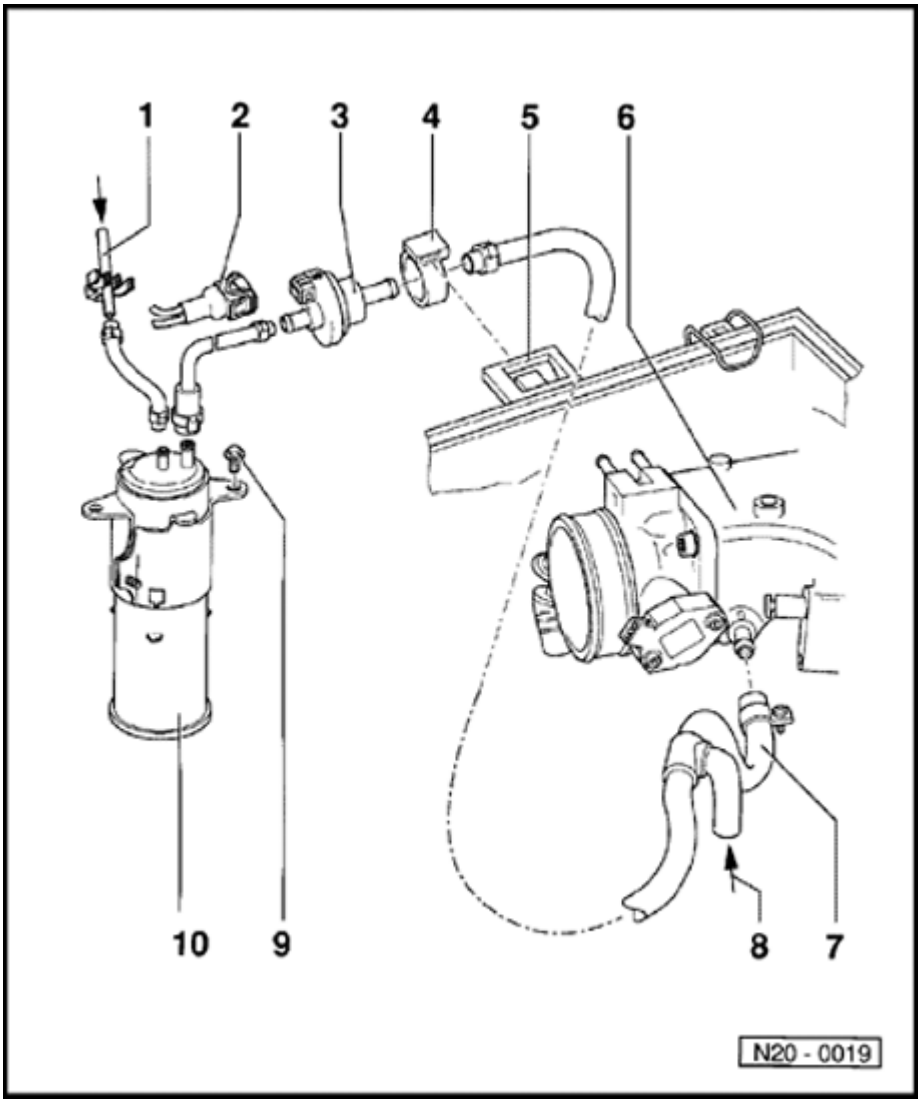

5 - Bracket

- At lower section of air filter

6 - Upper part of intake manifold

7 - Vent line

- Check for secure fitting
- Note installed position ⇒ Fig. 1

8 - From crankcase vent valve

9 - 10 Nm

10 - EVAP canister

- Component location: in wheelhousing, right front
- To remove, remove air filter housing with Mass Air Flow (MAF) Sensor -G70- ⇒ Page 24-19 , disassembling and assembling air filter

20-31

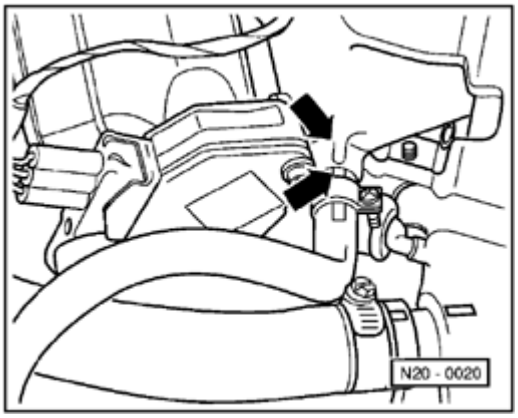

Fig. 1 Installed position of vent line on upper section of intake manifold

Marking on vent line must align with marking on upper section of intake manifold (arrows).

CAUTION!

Vent line must not come into contact with other components and must be routed over the hose for crankcase ventilation.

20-32

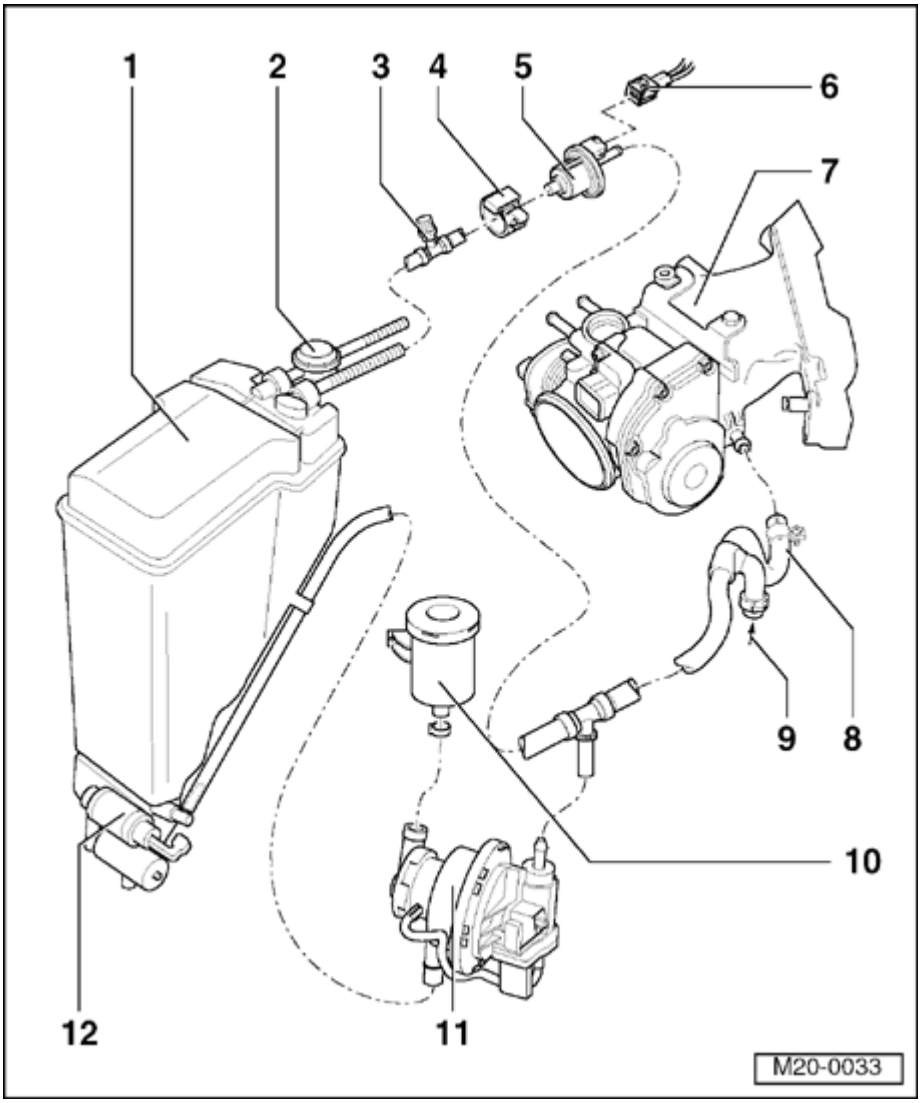

EVAP canister system components, removing and installing (vehicles with Leak Detection Pump)

1 - EVAP canister

- Component location: in wheelhousing, right front
- To remove, remove air filter housing with Mass Air Flow (MAF) Sensor -G70- ⇒ Page 24-19 , disassembling and assembling air filter

2 - Pressure regulation valve

- For fuel tank ventilation
- Vent line from gravity valve at fuel tank ⇒ Page 20-6 , item 28

3 - Test connection

20-33

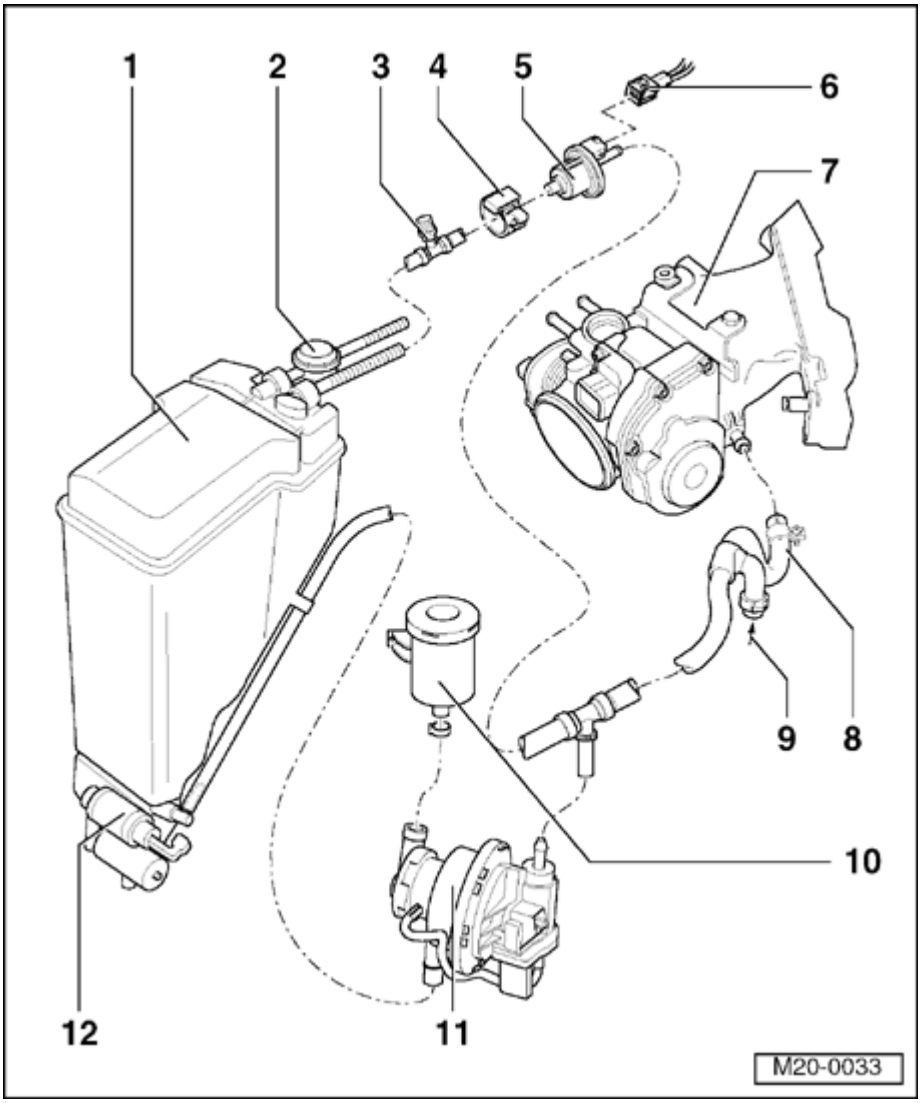

4 - Retaining ring

- For Evaporative Emission (EVAP) canister purge regulator valve -N80-

5 - Evaporative Emission (EVAP) Canister Purge Regulator Valve -N80-*

- Installation position: Arrow points in direction of flow
- Checking ⇒ Page 20-43

6 - Connector

- 2-pin

7 - Upper part of intake manifold

8 - Vent line

- Check for secure fitting
- Note installed position ⇒ Fig. 1

9 - From crankcase vent valve

10 - Air filter for diagnostic pump

- Clean if dirty

20-34

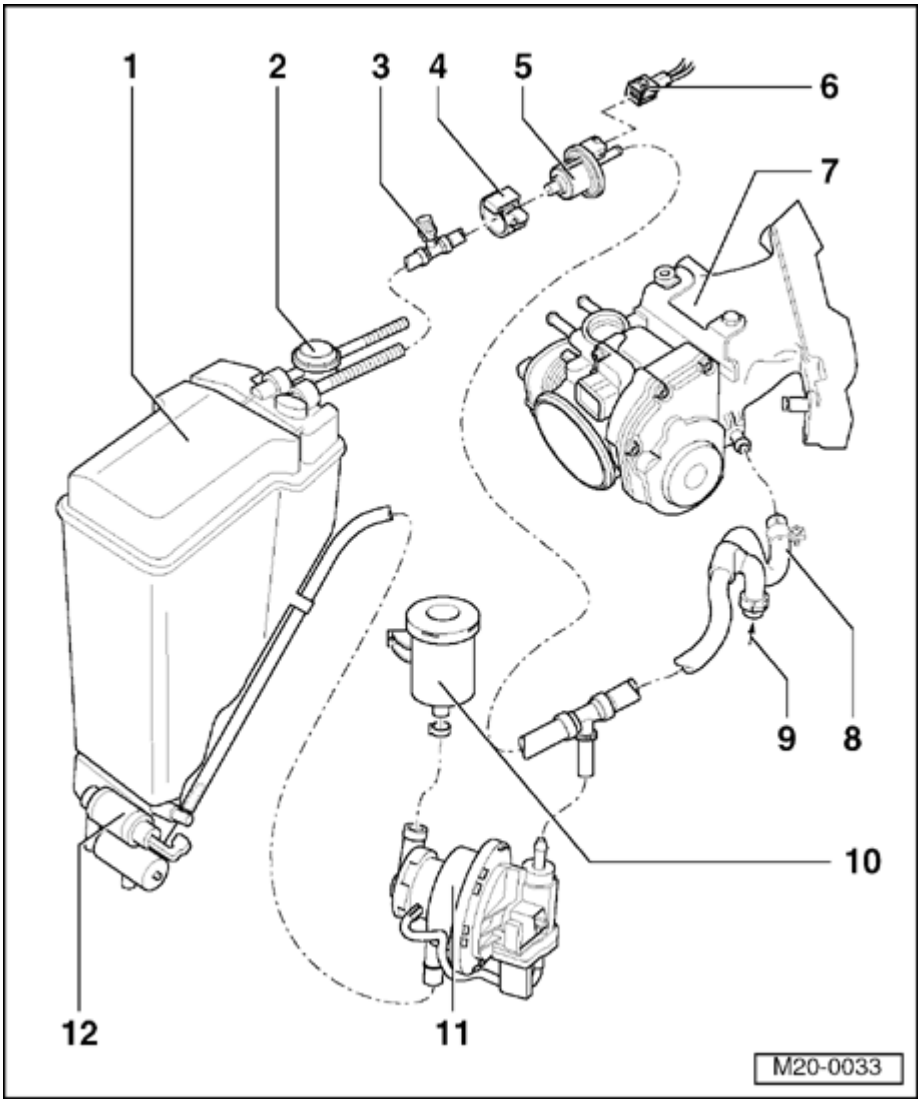

11 - Leak Detection Pump (LDP) -V144-*

- 3-pin connector, black
- Checking ⇒ Page 20-46

12 - Bleeder valve

20-35

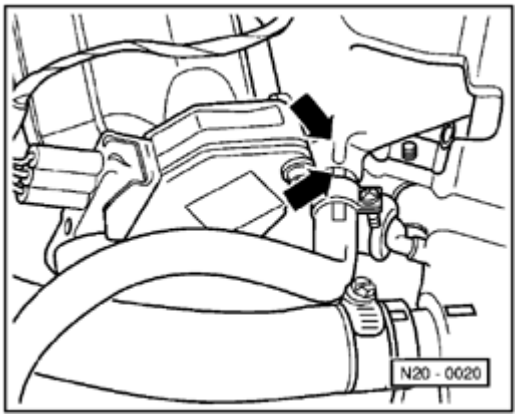

Fig. 1 Installed position of vent line on upper section of intake manifold

Marking on vent line must align with marking on upper section of intake manifold (arrows).

CAUTION!

Vent line must not come into contact with other components and must be routed over the hose for crankcase ventilation.

20-36

Fuel tank ventilation, checking (vehicles without Leak Detection Pump)

Recommended special tools and equipment

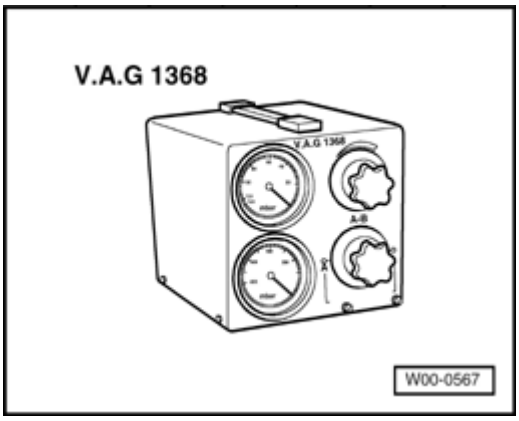

- V.A.G 1368 Vacuum tester

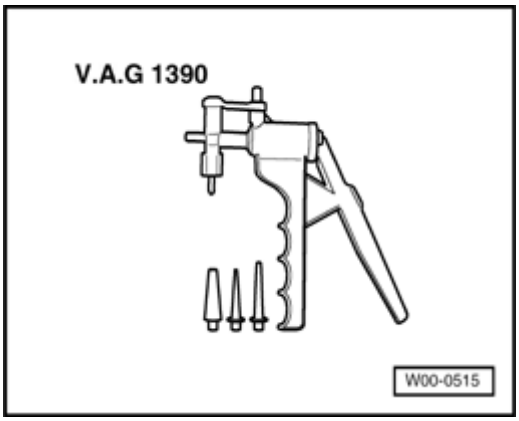

- V.A.G1390 hand vacuum pump

Test requirement

- Ignition switched off

20-37

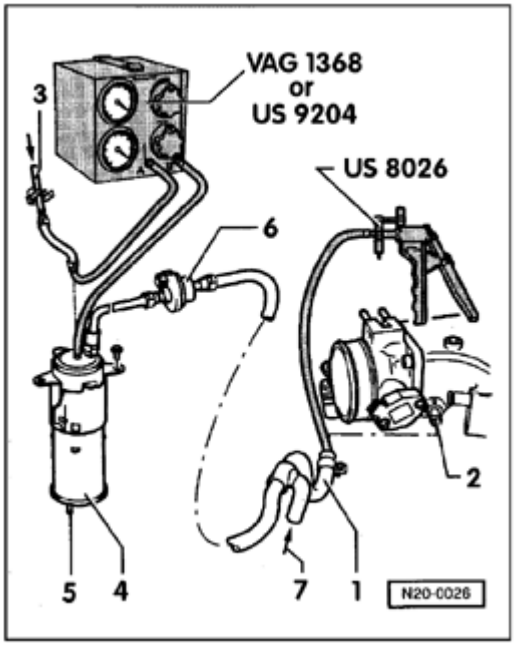

Test sequence

- Remove air filter ⇒ Page 24-19 , disassembling and assembling air filter.

- Disconnect ventilation hose -1- to Evaporative Emission (EVAP) Canister Purge Regulator Valve -N80- (-6-) at upper section of intake manifold -2-.
- For vehicles with crankcase vent valve, seal connection -7-.
- Connect hand vacuum pump to hose -1-.
- Disconnect ventilation hose -3- (for fuel tank) at EVAP canister -4- and connect to vacuum tester -connection A-.
- Connect vacuum tester -connection B- to connection on EVAP canister.
- Set vacuum tester to position -B-.
- Operate vacuum pump several times.

  There must be no vacuum building up.

20-38

If vacuum builds up:

- Check breather connection -5- at EVAP canister -4- for soiling, clean if necessary.

- Check Evaporative Emission (EVAP) Canister Purge Regulator Valve -N80- (-6-) for throughput, replace if necessary.

If no vacuum builds up:

- Unscrew fuel filler cap from fuel filler tube.

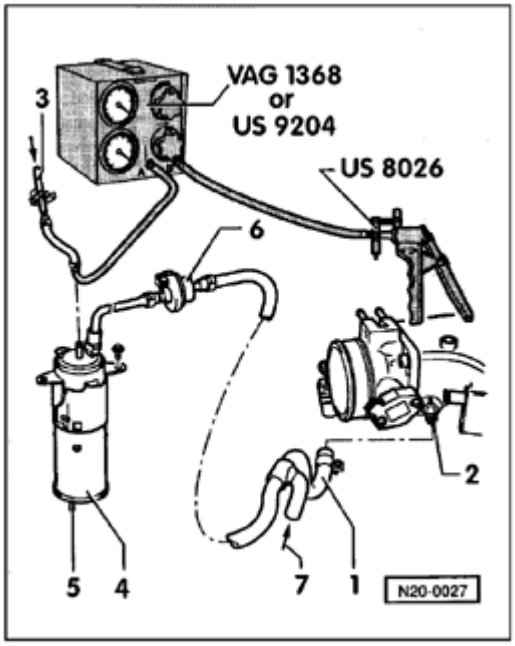

- Connect hand vacuum pump to vacuum tester - connection B-.
- Set vacuum tester to position -A/B-.
- Operate vacuum pump several times. There must be no vacuum building up.

If vacuum builds up:

- Check gravity valve ⇒ Page 20-6 , item 28 .
- Check line -3- from fuel tank for throughput.

20-39

If no vacuum builds up:

- Screw fuel filler cap on fuel filler tube.

- Operate vacuum pump several times.

  There must be no vacuum building up.

Note:

At a low fuel level in fuel tank, hand vacuum pump must be operated at least 20 to 30 times.

If vacuum builds up:

- Replace fuel filler cap for fuel filler tube.

20-40

EVAP canister system for proper seal, checking (vehicles with Leak Detection Pump)

Function test

- Select measuring value "Test-ID 01: Tank leak test" and check whether the specified value is being reached ⇒ Page ST-43 , Diagnostic mode 8: Tank leak test.

- Check specified value of tank leak test at idle.

  Specified value: Test function active

Note:

- *During tank leak test, Engine Control Module (ECM) limits test function active to approx. 12 minutes.*

- *If the accelerator pedal is depressed during test, the test will be aborted.*

- *To repeat tank leak test, switch ignition off and start engine again and let run at idle for at least 15 minutes.*

- End diagnosis and switch ignition off.

If a leak is detected:

Checking proper seal

If a small or large leak was recognized during the test of EVAP canister system, proceed as follows.

- Remove Leak Detection Pump (LDP) -V144- and seal connection piece to vent valve on EVAP canister ⇒ Page 20-32 , EVAP canister system components (vehicles with Leak Detection Pump), removing and installing.

- Repeat function test.

If malfunction persists:

- Check whether fuel filler cap of fuel filler tube is completely closed or whether the seal leaks; replace if necessary.

- Check whether flange of Fuel Pump (FP) unit or sealing ring is leaking; replace if necessary ⇒ Page 20-11 , Fuel Pump (FP) unit, removing and installing.

- Repeat function test.

20-42

If malfunction persists:

- Remove EVAP canister and check for cracks and leaks, replace if necessary ⇒ Page 20-32 , EVAP canister system components, removing and installing (vehicles with Leak Detection Pump).

- Check lines and hoses between EVAP canister and fuel filler tube or Evaporative Emission (EVAP) Canister Purge Regulator Valve -N80- for proper seal ⇒ Page 20-32 , EVAP canister system components, removing and installing (vehicles with Leak Detection Pump).

- Check hoses and hose clamps for secure seating.

- Repeat function test.

If malfunction is no longer present:

- Erase DTC memory of Engine Control Module (ECM) ⇒ Page ST-25 , Diagnostic mode 4: Reset/erase diagnostic data.

- Generate readiness code ⇒ Page ST-50 .

20-43

Evaporative Emission (EVAP) canister purge regulator valve 1, checking

Solenoid valve is closed when no voltage is present.

Recommended special tools and equipment

- V.A.G 1526 multimeter or V.A.G1715 multimeter
- V.A.G 1594 connector test kit
- Wiring diagram

Test requirements

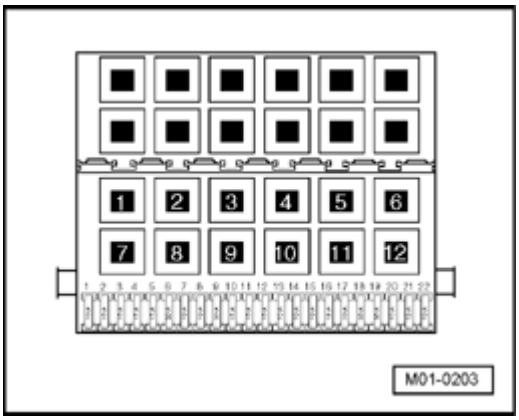

- The respective fuses of Evaporative Emission (EVAP) Canister Purge Regulator Valve -N80- must be OK:

⇒ *Electrical Wiring Diagrams, Troubleshooting & Component Locations*

- Ground (GND) connections between engine, transmission, and chassis must be OK.
- Ignition switched off.

20-44

Test sequence

- Disconnect 2-pin connector from Evaporative Emission (EVAP) Canister Purge Regulator Valve -N80-:
  - Vehicles without Leak Detection Pump (LDP) ⇒ Page 20-29 , item 2 ,
  - Vehicles with Leak Detection Pump (LDP) ⇒ Page 20-33 , item 6 .

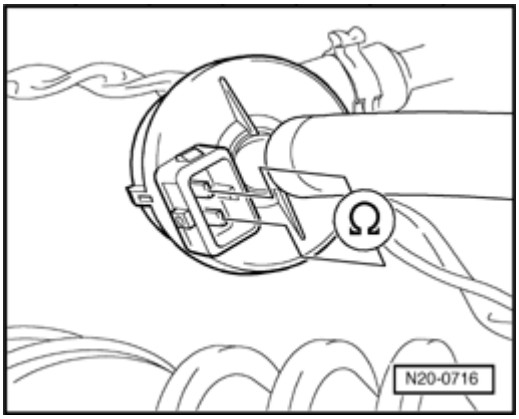

- Measure resistance between terminals of solenoid valve.

  Specified value: 22.0 to 30.0 Ω

If specified value is not obtained:

- Replace Evaporative Emission (EVAP) Canister Purge Regulator Valve -N80-:
  - Vehicles without Leak Detection Pump (LDP) ⇒ Page 20-29 , item 3 ,
  - Vehicles with Leak Detection Pump (LDP) ⇒ Page 20-33 , item 5 .
- Erase DTC memory of Engine Control Module (ECM) ⇒ Page ST-25 , Diagnostic mode 4: Reset/erase diagnostic data.
- Generate readiness code ⇒ Page ST-50 .

20-45

If specified value is obtained:

- Check wires according to wiring diagram ⇒ Page 20-45 .

Checking wiring

- Connect test box to control module wiring harness ⇒ Page ST-10 , connect test box for wiring test.

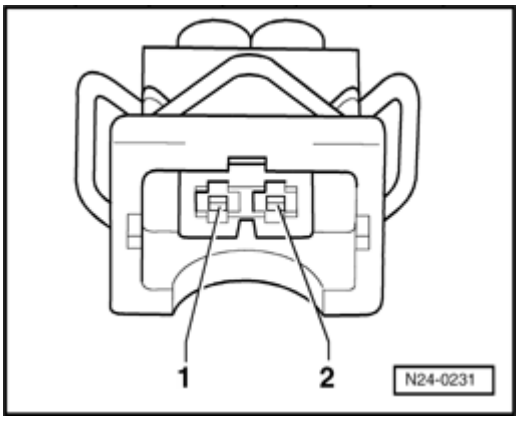

- Check wire connection between test box and 2-pin connector for open circuit according to wiring diagram:

⇒ *Electrical Wiring Diagrams, Troubleshooting & Component Locations*

- Check the wire for short circuit to B+ and to Ground (GND).

  Specified value: ∞

- Check wire between 2-pin connector and the Fuel Pump (FP) Relay -J17- for open circuit according to wiring diagram:

⇒ *Electrical Wiring Diagrams, Troubleshooting & Component Locations*

- Erase DTC memory of Engine Control Module (ECM) ⇒ Page ST-25 , Diagnostic mode 4: Reset/erase diagnostic data.
- Generate readiness code ⇒ Page ST-50 .

If no malfunctions are found in wires:

- Replace Motronic Engine Control Module (ECM) -J220- ⇒ Page 24-101 .

20-46

Leak Detection Pump (LDP), checking

Recommended special tools and equipment

- V.A.G 1526 multimeter or V.A.G1715 multimeter
- V.A.G 1594 connector test kit
- Wiring diagram

Requirements

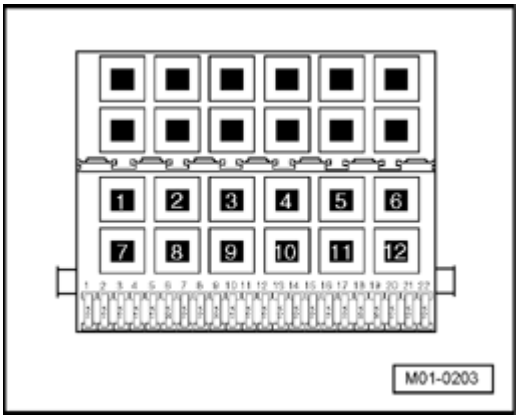

- The respective fuses of Leak Detection Pump (LDP) -V144- must be OK:

⇒ *Electrical Wiring Diagrams, Troubleshooting & Component Locations*

- Ground (GND) connections between engine and chassis must be OK.
- Ignition switched off.

20-47

Work sequence

- Remove right rear wheelhousing liner.

- Disconnect 3-pin connector of Leak Detection Pump (LDP) -V144-.

Checking resistances

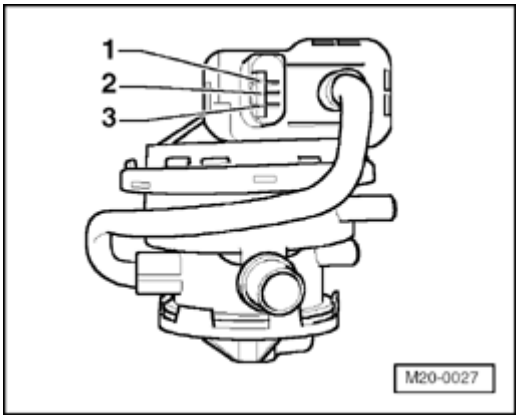

- Measure resistance between terminals 1 + 3 of diagnostic pump.

  Specified value: 640 to 720 Ω

- Measure resistance between terminals 2 + 3 of diagnostic pump.

  Specified value: 12.0 to 20.0 Ω

If specified values are not obtained:

- Replace Leak Detection Pump (LDP) -V144- ⇒ Page 20-34 , item 11
- Erase DTC memory of Engine Control Module (ECM) ⇒ Page ST-25 , Diagnostic mode 4: Reset/erase diagnostic data.
- Generate readiness code ⇒ Page ST-50 .

If specified values are obtained:

- Check wires according to wiring diagram ⇒ Page 20-48 .

20-48

Checking wiring

- Connect test box to control module wiring harness ⇒ Page ST-10 , connect test box for wiring test.

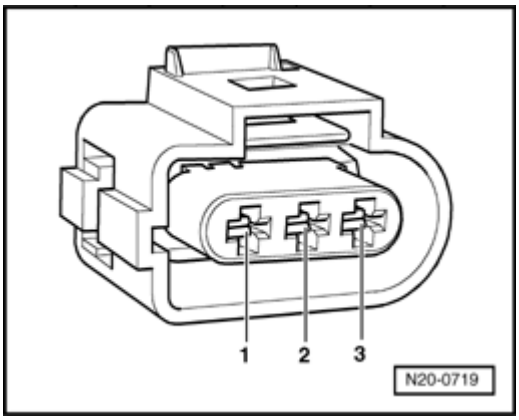

- Check wires between test box and 3-pin connector for open circuits according to wiring diagram.

  Terminal 1 + socket 46

  Terminal 2 + socket 35

  Wire resistance: max. 1.5 Ω

- Check wires for short circuit to each other, to vehicle Ground (GND) and to B+.

  Specified value: ∞

- Check wire between 3-pin connector terminal 3 and relay carrier for open circuit according to wiring diagram:

⇒ *Electrical Wiring Diagrams, Troubleshooting & Component Locations*

20-49

- Erase DTC memory of Engine Control Module (ECM) ⇒ Page ST-25 , Diagnostic mode 4: Reset/erase diagnostic data.

- Generate readiness code ⇒ Page ST-50 .

If no malfunctions are found in wires:

- Replace Motronic Engine Control Module (ECM) -J220- ⇒ Page 24-101 .

Accelerator Pedal (AP) cable, adjusting

Vehicles with manual transmission

Requirement

- Ignition switched off

Work procedure

- Remove spark plugs with ignition wires ⇒ Page 28-3 , Ignition components, removing and installing

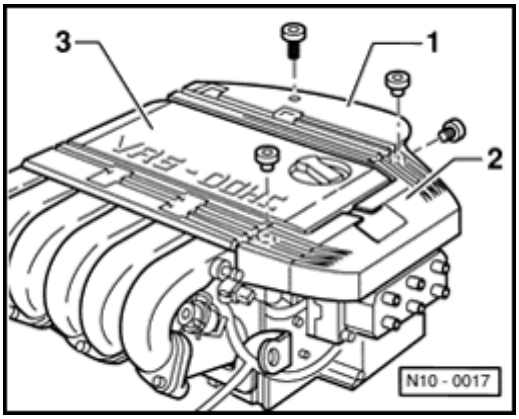

- Remove ignition wire guides -1- and -2-.
- Remove cover over upper section of intake manifold -3-.
- Press accelerator pedal to Wide Open Throttle (WOT) position.

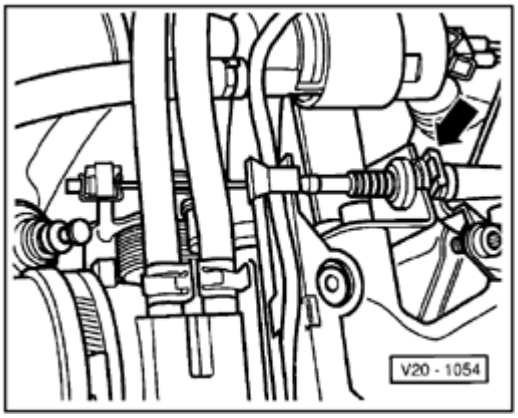

- Adjust accelerator pedal cable via swapping of positioning clip (arrow) at support bracket so that Wide Open Throttle (WOT) position is reached on throttle valve lever.
- Release accelerator pedal.

20-51

Vehicles with automatic transmission

Recommended special tools and equipment

- Spacer piece 15 mm
- V.A.G 1526 multimeter or V.A.G 1715 multimeter
- V.A.G 1594 connector test kit

Requirement

- Ignition switched off

Work procedure

- Remove spark plugs with ignition wires ⇒ Page 28-3 , Ignition components, removing and installing

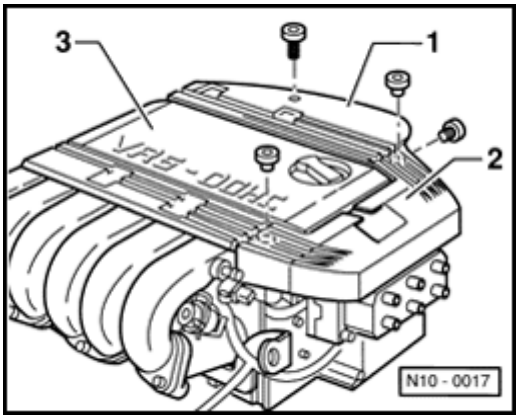

- Remove ignition wire guides -1- and -2-.
- Remove cover over upper section of intake manifold -3-.

20-52

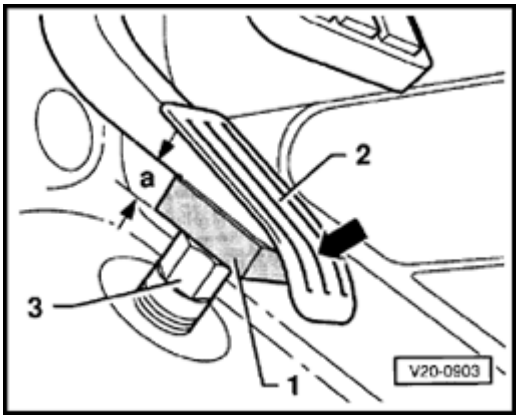

- Spacer piece -1-,

  a = 15 mm, clamp between accelerator pedal -2- and stop -3- and hold accelerator pedal firmly in this position.

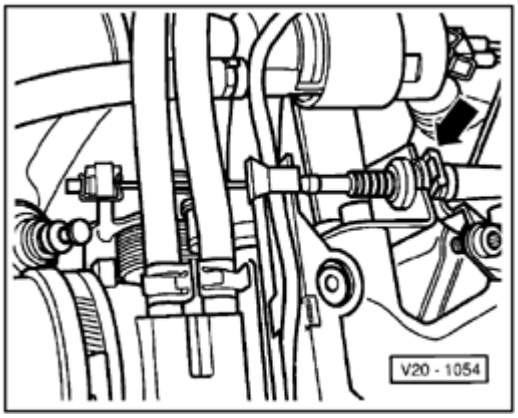

- Open throttle valve completely by pulling on accelerator pedal cable sleeve and secure in this position using positioning clip (arrow).
- Release accelerator pedal.
- Disconnect 2-pin harness connector from Kick Down Switch -F8- in engine compartment at front (on cross panel).

20-53

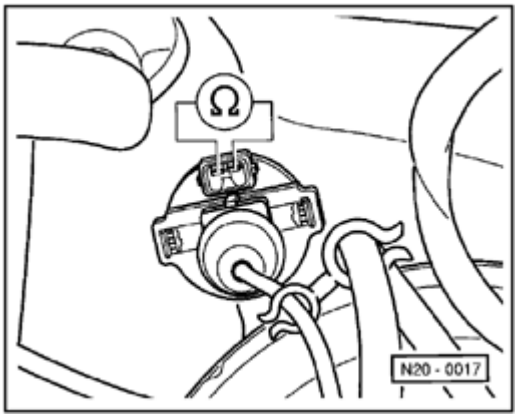

- Connect hand multimeter with adapter cables to Kick Down Switch -F8-.
- Measure resistance at switch.

  Specified value: ∞ Ω (no continuity)
- Move accelerator pedal slowly in direction of Wide Open Throttle (WOT).
  - ♦ Shortly after kickdown point, resistance must drop to 0 Ω (continuity).
  - ♦ For this, accelerator pedal must be slightly before stop.
- Release accelerator pedal.

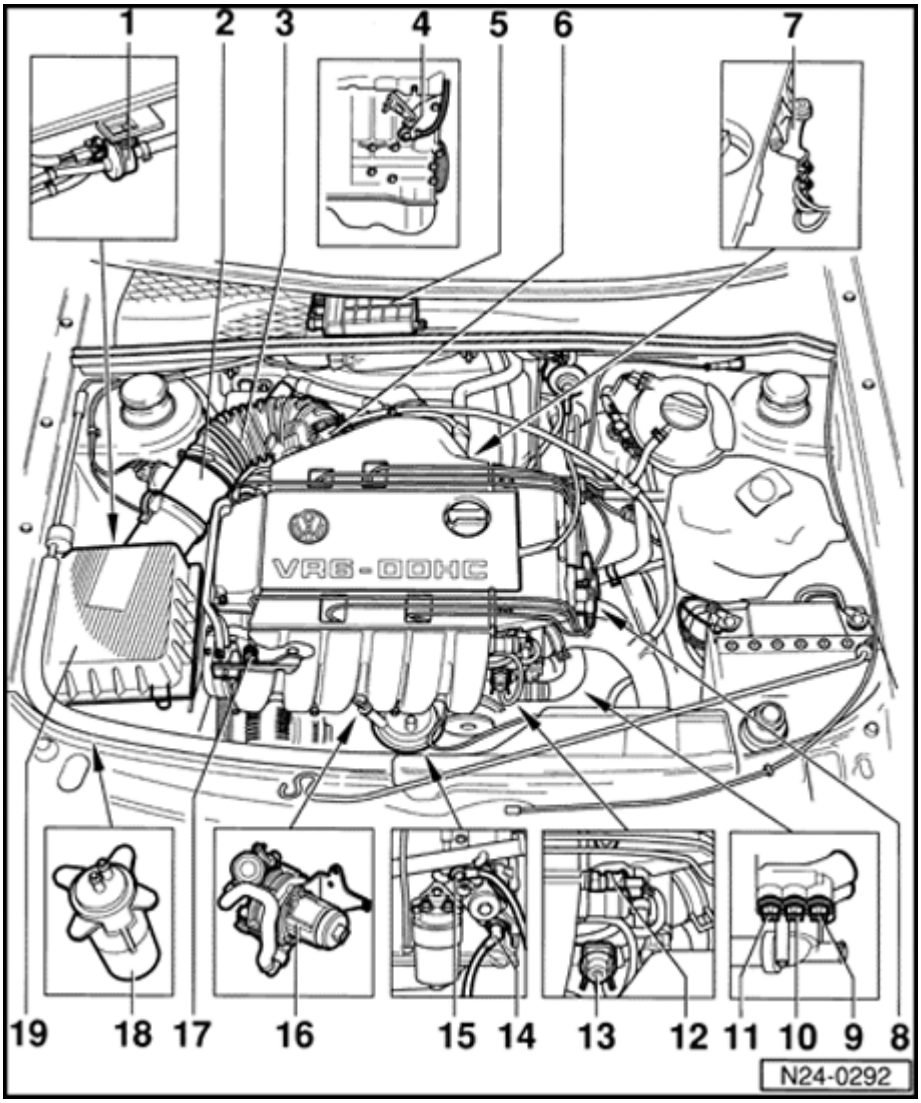

Motronic fuel injection and ignition system

Component locations overview

Note:

- *Components marked with * are tested via On Board Diagnostic (OBD) ⇒ Page ST-21 , Diagnostic mode 3: Check DTC memory.*
- *Component location of Secondary Air Injection (AIR) Pump Relay -J299-* ⇒ Page 26-16 , Fig. 1.*

1 - Evaporative Emission (EVAP) Canister Purge Regulator Valve -N80-*

Vehicles without Leak Detection Pump (LDP) ⇒ Page 20-29 , item 3

Vehicles with Leak Detection Pump (LDP) ⇒ Page 20-33 , item 5

2 - Mass Air Flow (MAF) Sensor -G70-*

24-2

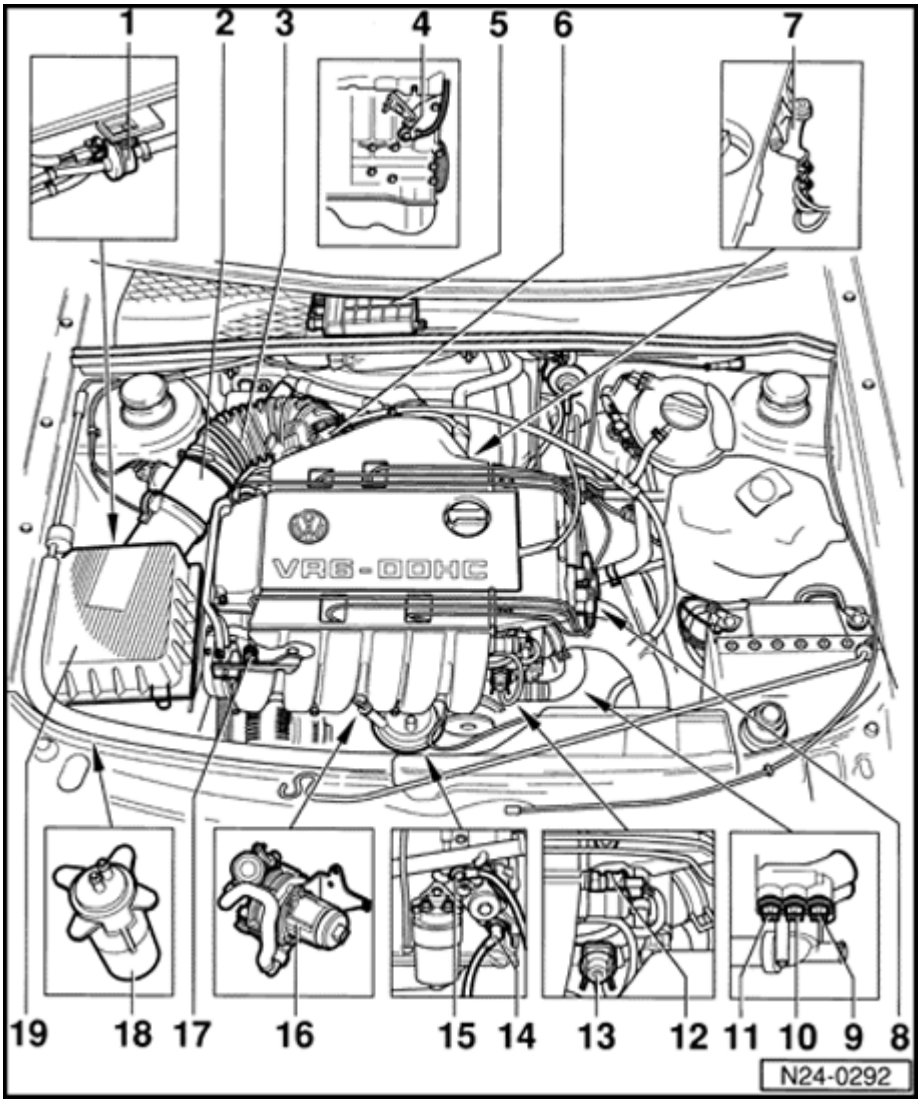

3 - Intake hose

- With Positive Crankcase Ventilation (PCV) Heating Element -N79-

4 - Knock Sensor (KS) 1 - G61-*

- ⇒ Page 28-5 , item 12

5 - Engine Control Module (ECM)*

(control module for Motronic Engine Control Module (ECM) -J220-)

6 - Throttle Valve Control Module - 338-*

7 - Ground (GND) connection

8 - Ignition Coil -N152-

- ⇒ Page 28-4 , item 6

9 - A/C Cut-Out Thermal Switch -F163- and Third Speed Coolant Fan Control (FC) Thermal Switch -F165-

- Brown, 4-pin
- Only for vehicles with A/C system

24-3

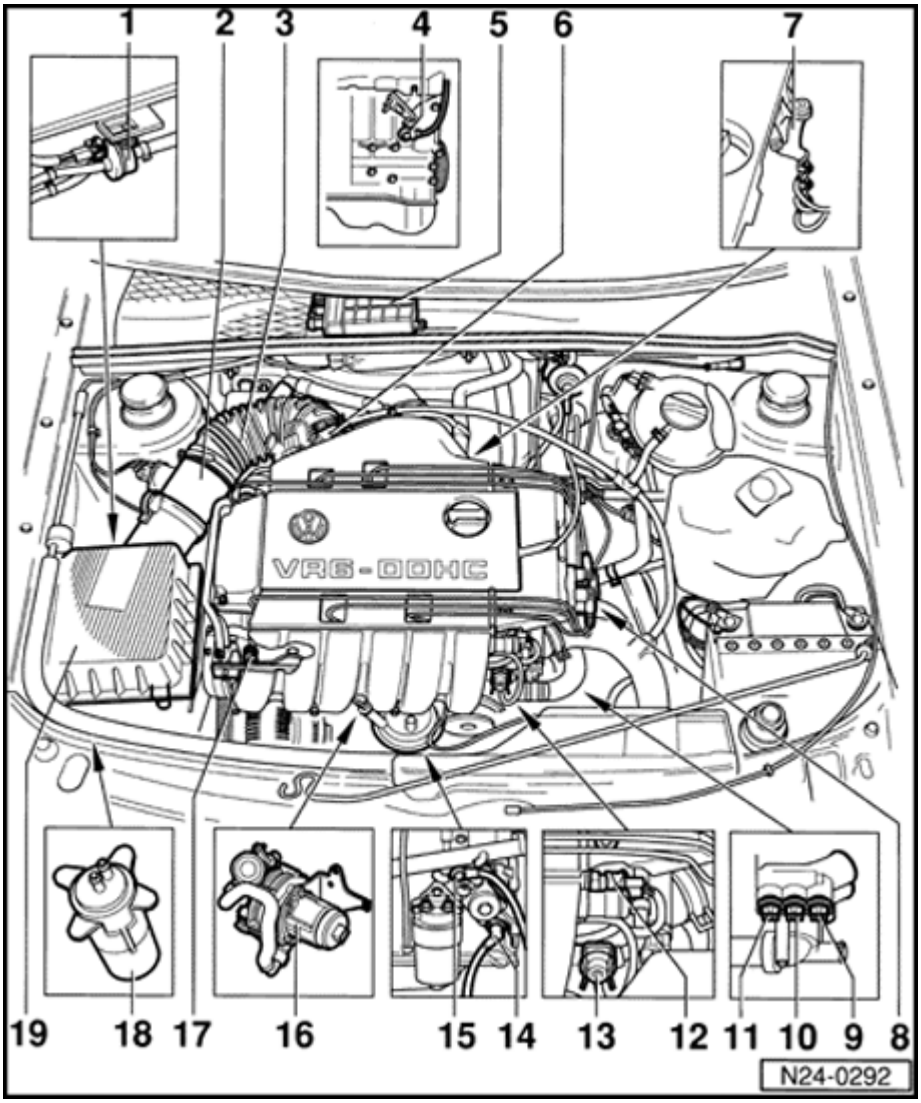

10 - Engine Coolant Temperature (ECT) Sensor -G62-*

- Blue, 2-pin
- For Engine Control Module (ECM)

11 - After-Run Coolant Fan Control (FC) Thermal Switch -F87- with Engine Coolant Temperature (ECT) Sensor -G2-

- Yellow, 4-pin

12 - Intake Air Temperature (IAT) Sensor -G72-*

13 - Fuel pressure regulator

14 - Engine Speed (RPM) Sensor -G28-*

15 - Knock Sensor (KS) 2 - G66-*

- ⇒ Page 28-4 , item 10

16 - Secondary Air Injection (AIR) pump motor - V101-*

- ⇒ Page 26-13 , item 1

24-4

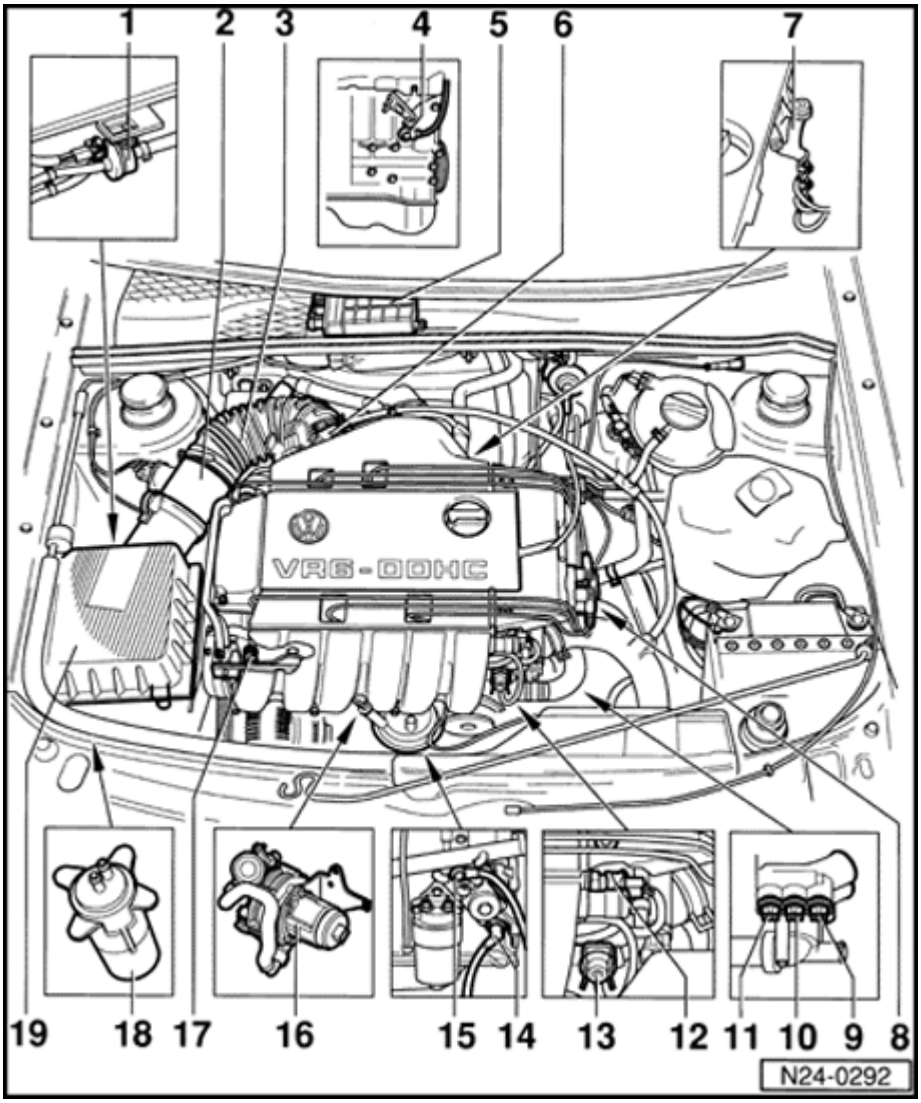

17 - Fuel injector (-N30- to -N33-, -N83-, -N84-)*

- Checking ⇒ Page 24-65

18 - EVAP canister

Vehicles without Leak Detection Pump (LDP) ⇒ Page 20-30 , item 10

Vehicles with Leak Detection Pump (LDP) ⇒ Page 20-32 , item 1

19 - Air filter

General Notes on Fuel Injection

Servicing ignition ⇒ Page 28-1 .

Note:

- *Engine Control Module (ECM) is equipped with On Board Diagnostic (OBD). Always check DTC memory first, before performing repairs or troubleshooting. Vacuum hoses and connections should also be checked (false air).*
- *For the electric components to work properly, a voltage of at least 11.5 V is required.*
- *Do not use any silicone sealant. Traces of silicone components which are sucked into the engine are not burned there, and they damage the oxygen sensors.*
- *The battery must only be disconnected and connected with the ignition switched off, since the Engine Control Module (ECM) can otherwise be damaged.*
- *Fuel hoses at engine must only be secured with spring-type clamps. The use of clamping collars or screw clamps is not permitted.*

- *VAS 5024A spring-type clip pliers is recommended for installing spring-type clips.*

- *Components marked with * are tested via On Board Diagnostic (OBD) ⇒ Page ST-21 , Diagnostic mode 3: Check DTC memory.*

- *It is possible that the control module will recognize a malfunction and store a DTC during some tests. Therefore the following work steps must be performed in the mentioned sequence after ending all tests and repairs.*

  - - Check DTC memory ⇒ Page ST-21 , Diagnostic mode 3: Check DTC Memory,

  - - Erase DTC memory ⇒ Page ST-25 , Diagnostic mode 4: Reset/erase diagnostic data

  - - For completion, generate readiness code ⇒ Page ST-50 .

Safety precautions ⇒ Page 24-22 .

Rules of cleanliness ⇒ Page 24-25 .

Technical data ⇒ Page 24-26 .

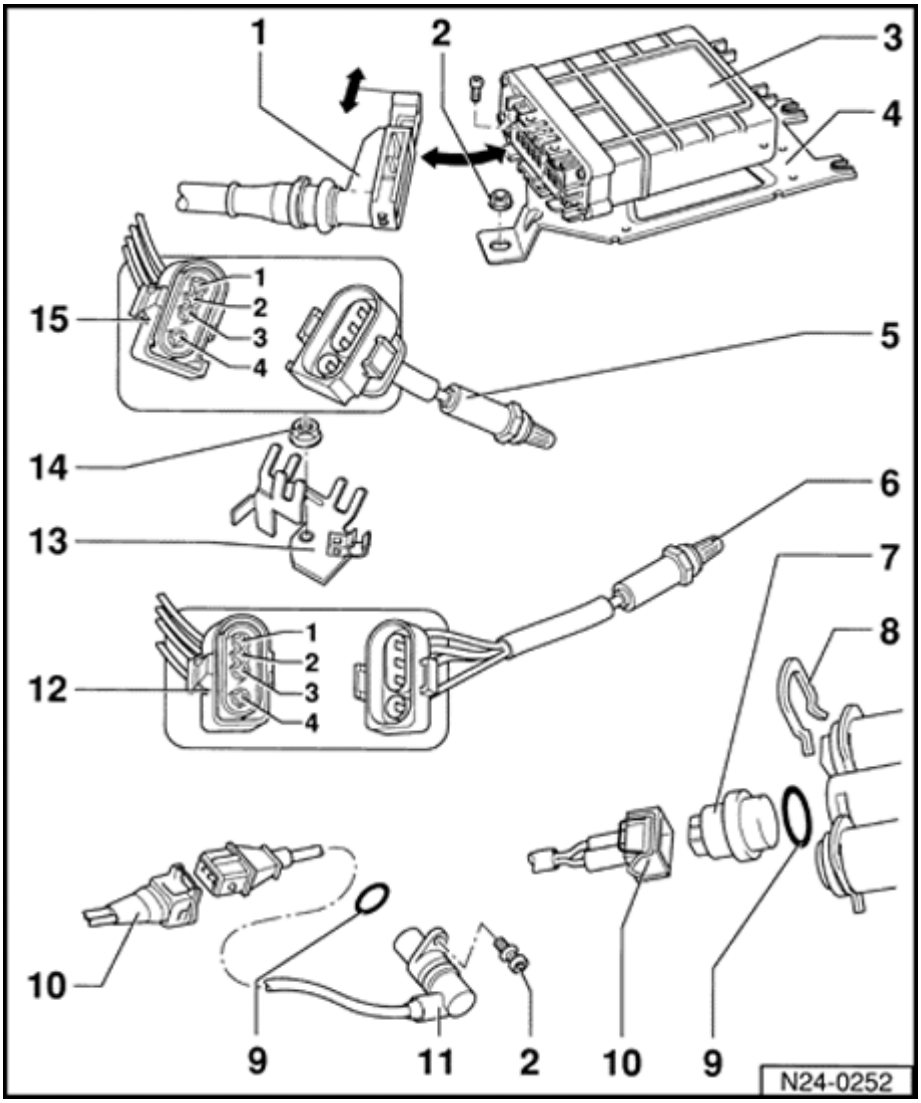

Fuel injection system components, removing and installing

1 - Connector

- 68-pin
- Switch ignition off before disconnecting or connecting connector
- Disengage to pull off

2 - 10 Nm

3 - Engine Control Module (ECM)*

(control module for Motronic Engine Control Module (ECM) -J220-)

- Component location: In plenum chamber, right side
- 68-pin connector
- Checking voltage supply ⇒ Page 24-97
- Always replace ⇒ Page 24-101

4 - Securing plate

- For Motronic Engine Control Module (ECM) -J220-

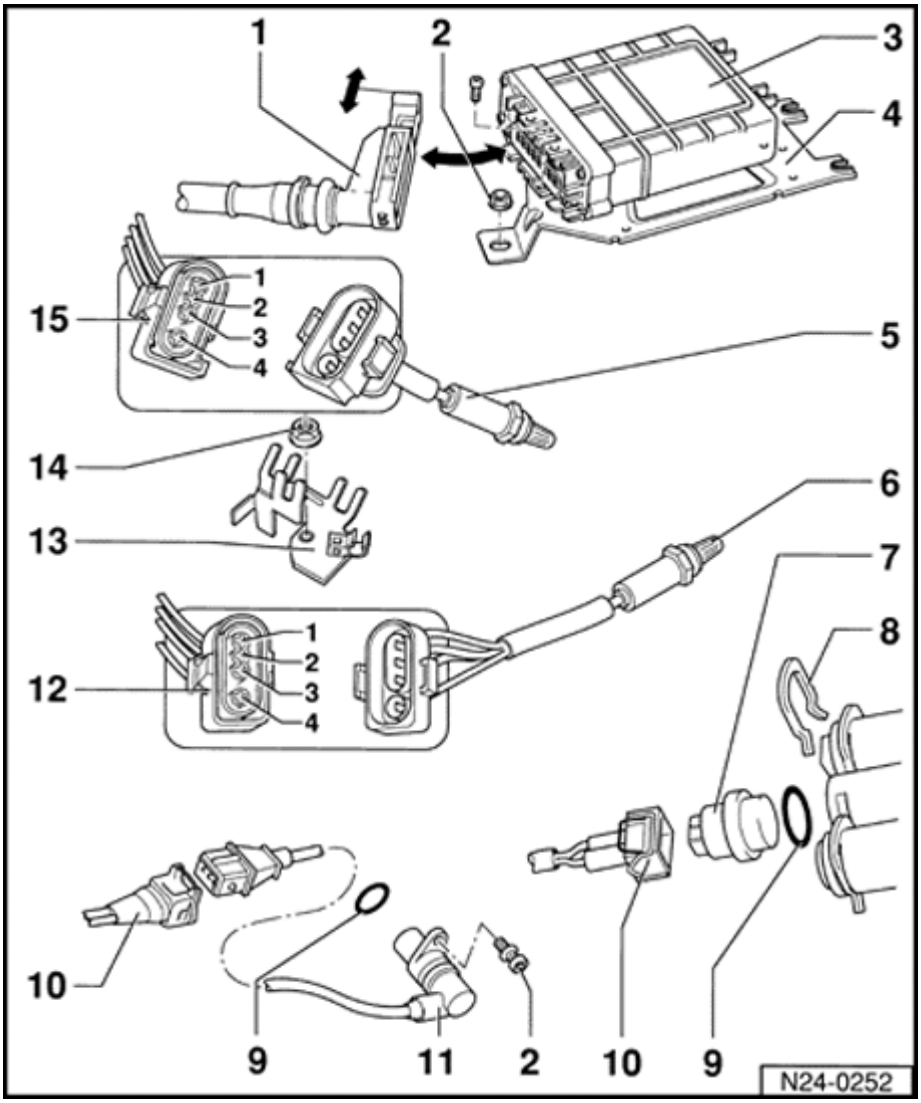

5 - Oxygen Sensor (O2S) Behind Three Way Catalytic Converter (TWC) -G130- bank 1*, 50 Nm

- Component location: In rear catalytic converter
- Only grease threads with G 052 112 A3 locking compound, do NOT allow locking compound to get into slots on sensor body
- Voltage supply of oxygen sensor heater via Fuel Pump (FP) Relay -J17-
- Check oxygen sensor heater for Oxygen Sensor (O2S) behind Three Way Catalytic Converter (TWC) ⇒ Page 24-30
- Check Oxygen Sensor (O2S) and oxygen sensor control behind Three Way Catalytic Converter (TWC) ⇒ Page 24-91

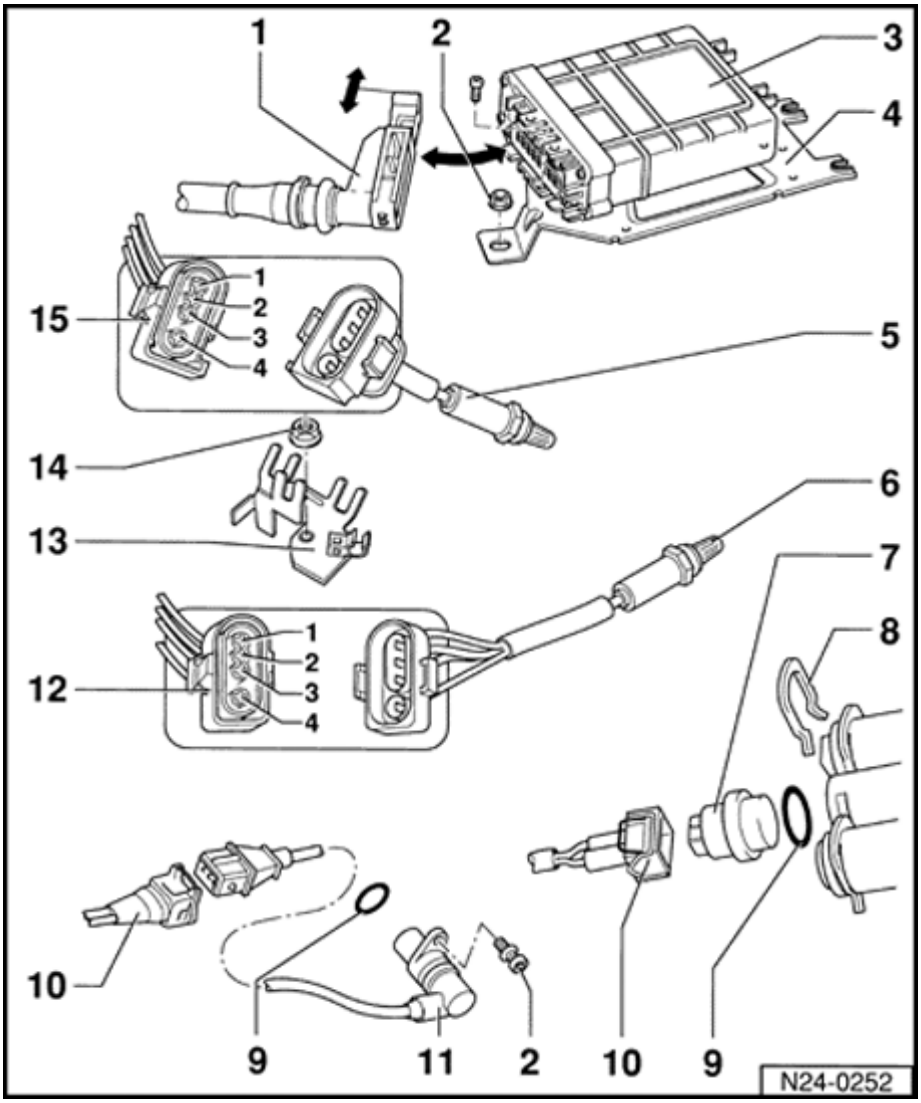

6 - Heated Oxygen Sensor (HO2S) 1 -G39-*, 50 Nm

- Component location: in front catalytic converter
- Only grease threads with G 052 112 A3 locking compound, do NOT allow locking compound to get into slots on sensor body
- Voltage supply of oxygen sensor heater via Fuel Pump (FP) Relay -J17-
- Check oxygen sensor heater for Oxygen Sensor (O2S) before Three Way Catalytic Converter (TWC) ⇒ Page 24-27
- Check Oxygen Sensor (O2S) and oxygen sensor control before Three Way Catalytic Converter (TWC) ⇒ Page 24-86

24-10

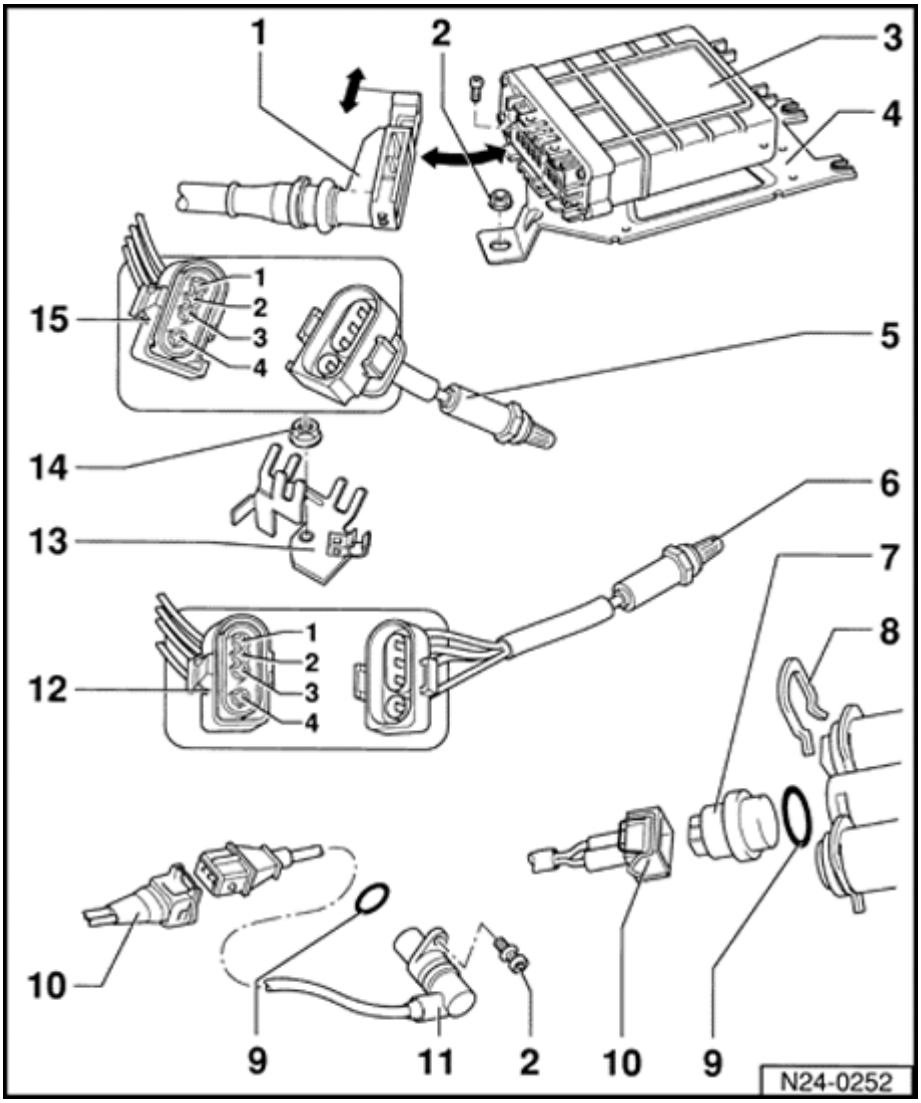

7 - Engine Coolant Temperature (ECT) Sensor -G62-*

- Blue, 2-pin
- For Engine Control Module (ECM)
- If necessary, release pressure in cooling system before removing
- Checking ⇒ Page 24-46

8 - Retaining clip

- Check for secure fitting

9 - O-ring

- Replace if damaged

10 - Connector

- 2-pin

11 - Engine Speed (RPM) Sensor -G28-*

- Component location: Cylinder block, intake side
- Checking ⇒ Page 24-62

12 - 4-pin harness connector

- Black
- For Heated Oxygen Sensor (HO2S) -G39- and oxygen sensor heater

24-11

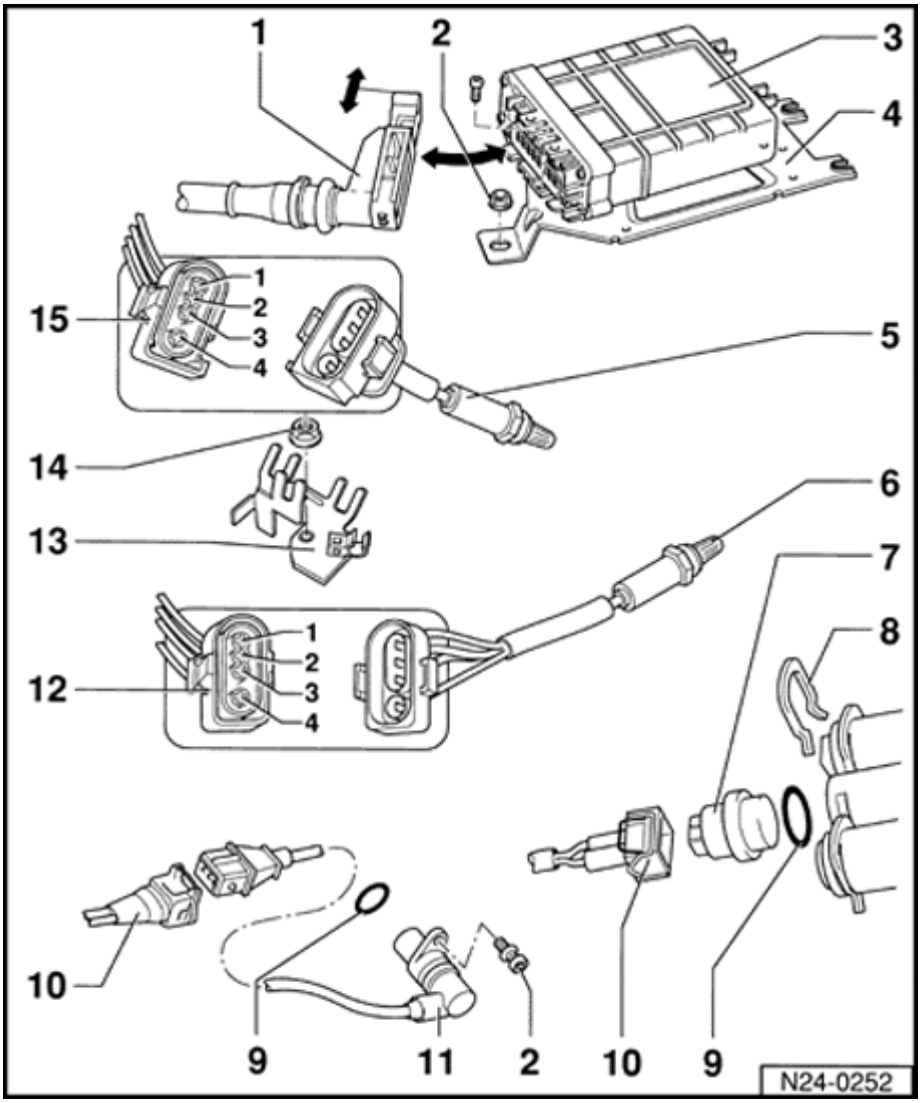

13 - Bracket

- For harness connector for oxygen sensors and Knock Sensor (KS) 1

14 - 20 Nm

15 - 4-pin harness connector

- Brown
- For Heated Oxygen Sensor (HO2S) 2 - G108- and oxygen sensor heater

24-12

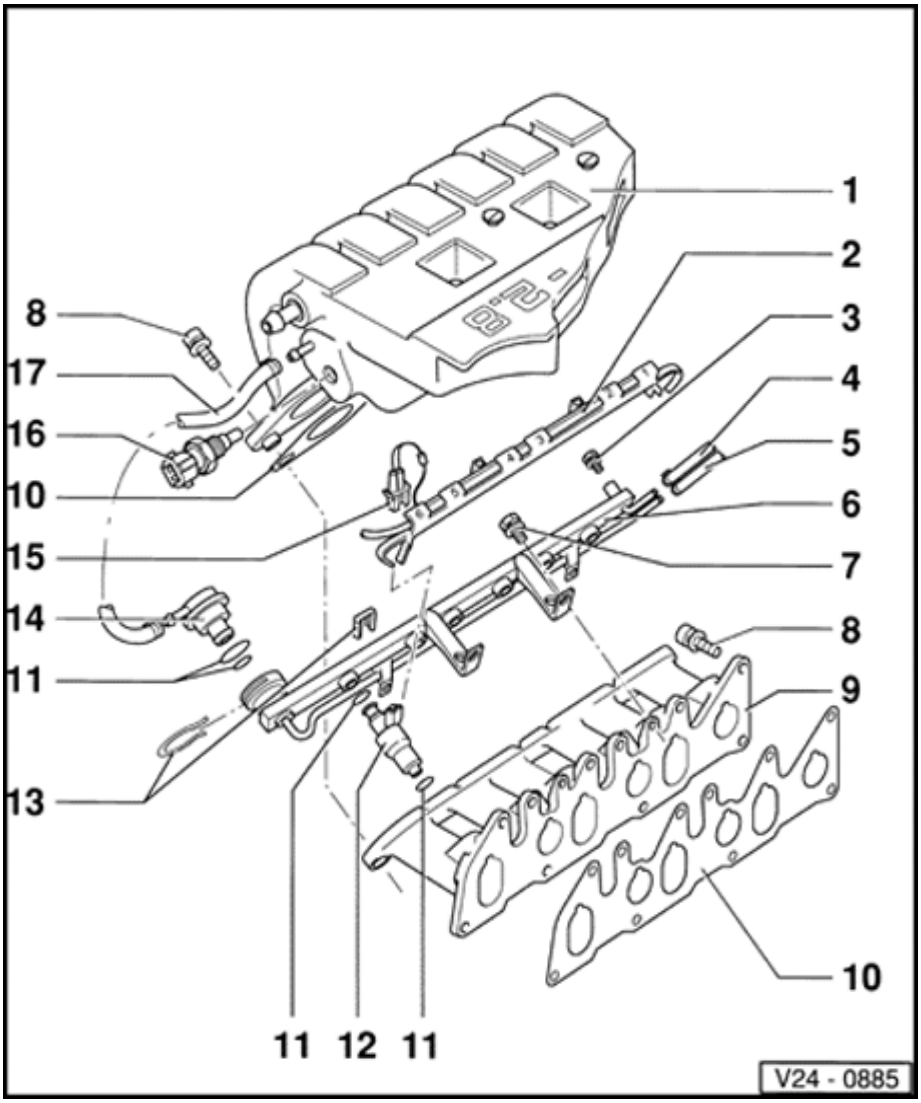

Fuel distributor with fuel injectors, disassembling and assembling

1 - Upper part of intake manifold

2 - Wiring channel

3 - Locking bolt

- For test connection

4 - Supply hose

- White marking
- Secure with spring type clamps
- Check for secure fitting
- From fuel filter ⇒ Page 20-6 , item 24

5 - Return hose

- Blue marking
- Secure with spring type clamps
- Check for secure fitting
- To flange of Fuel Pump (FP) ⇒ Page 20-5 , item 18

24-13

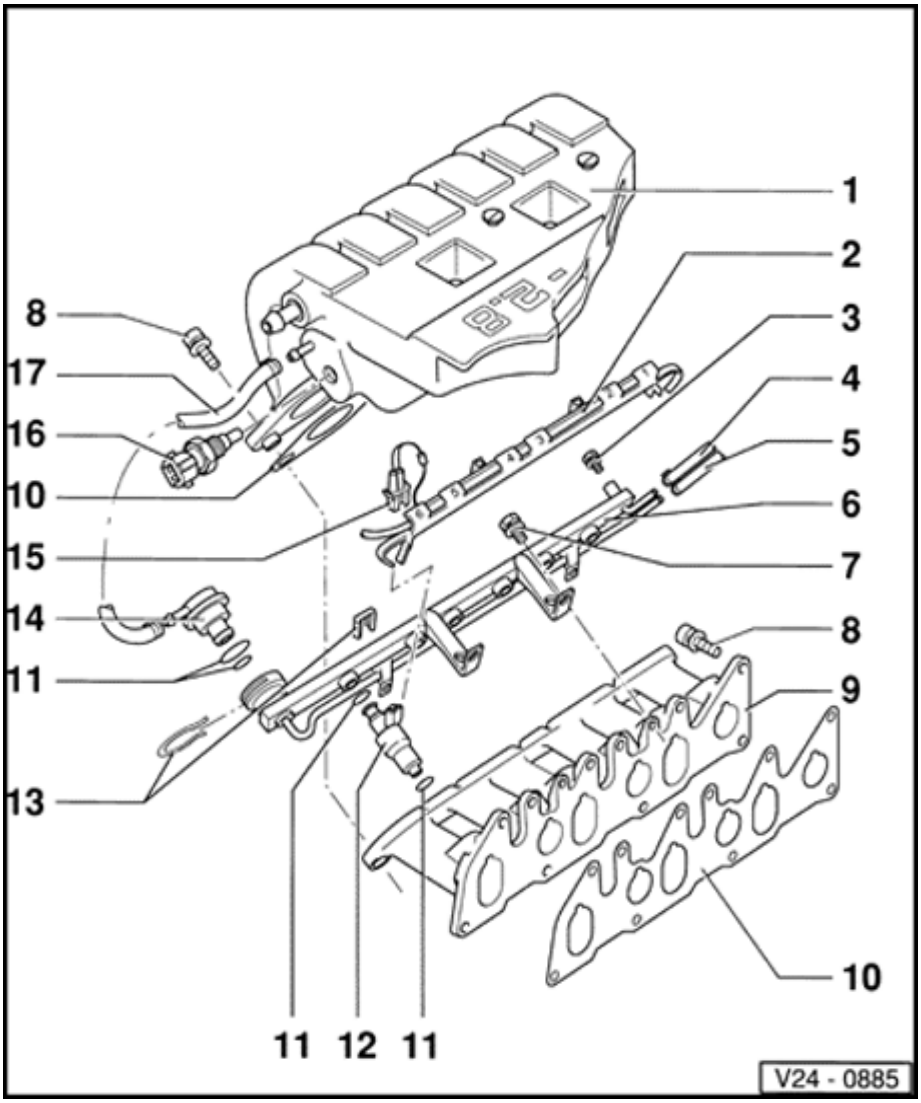

6 - Fuel distributor

7 - 10 Nm

8 - 25 Nm

9 - Lower part of intake manifold

10 - Gasket

- Always replace

11 - O-ring

- Always replace
- Lightly lubricate O-rings with clean engine oil before installing

12 - Fuel injector (-N30- to -N33-, -N83-, -N84-)*

- Checking ⇒ Page 24-65

13 - Retaining clip

- Check for secure fitting

14 - Fuel pressure regulator

- Checking ⇒ Page 24-78

24-14

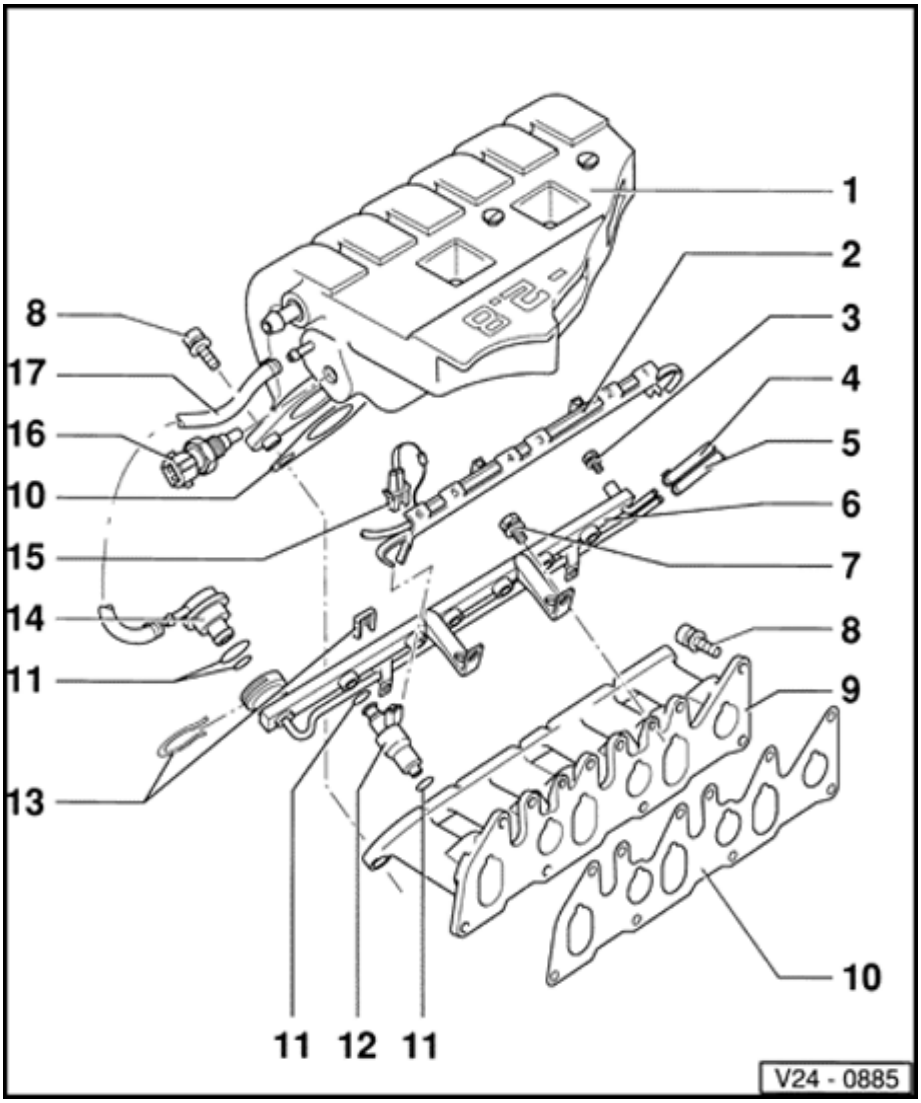

15 - Connector

- 2-pin
- For fuel injector (-N30- to -N33-, -N83-, -N84-)

16 - Intake Air Temperature (IAT) Sensor -G72-*, 10 Nm

- 2-pin connector
- Checking ⇒ Page 24-55

17 - Vacuum hose

- Check for secure fitting

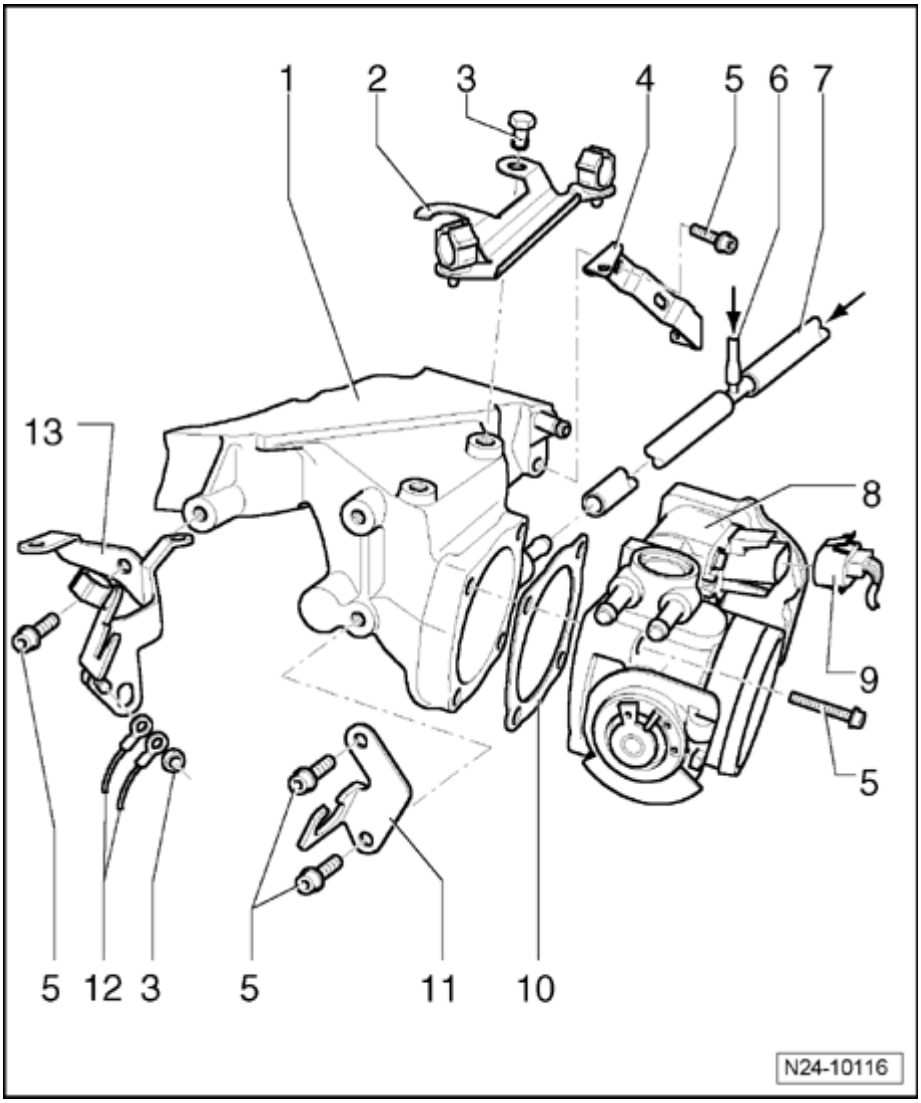

Throttle valve control module, removing and installing

1 - Upper part of intake manifold

- First tighten at lower section of intake manifold, then tighten both rear supports (item 13 and item 4)

2 - Wiring channel

3 - 10 Nm

4 - Right rear support

- Between upper part of intake manifold and cylinder head

5 - 25 Nm

6 - Vacuum hose

- Check for secure fitting
- From Secondary Air Injection (AIR) Solenoid Valve -N112- ⇒ Page 26-14 , item 7

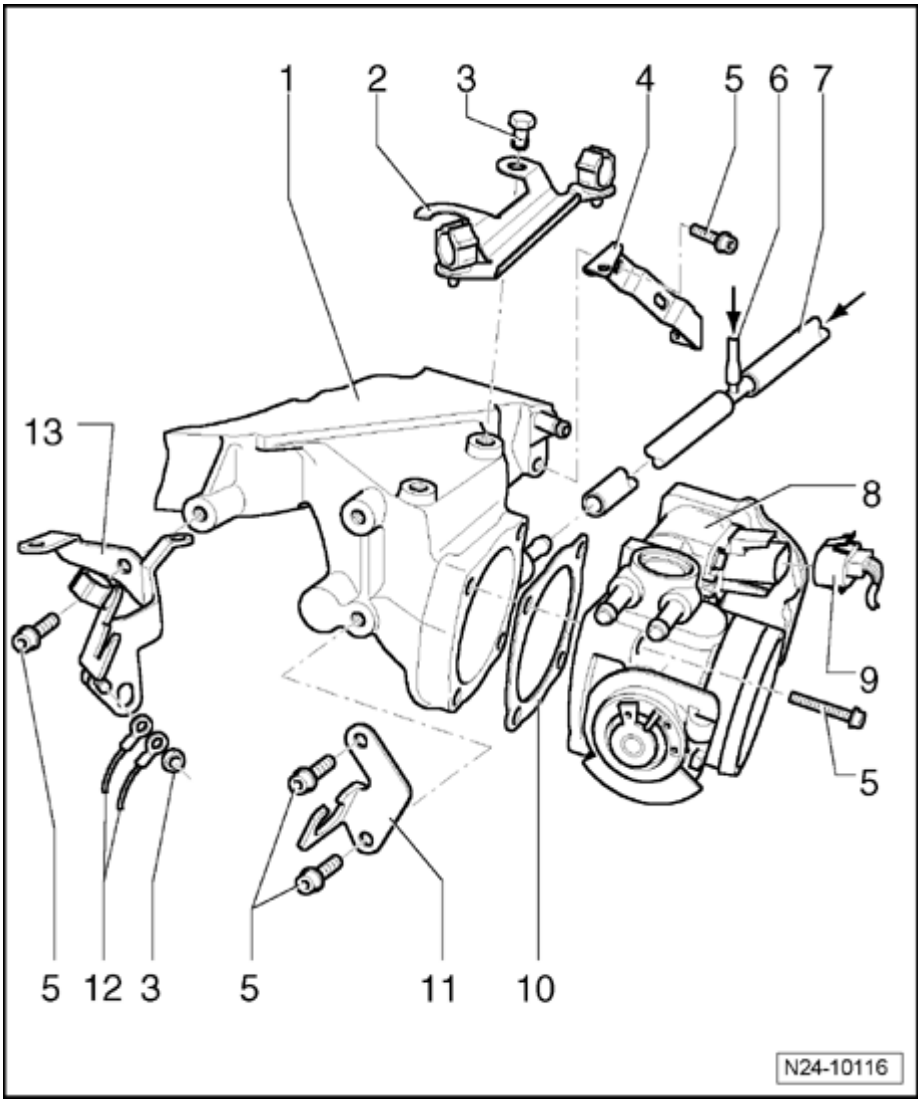

7 - Ventilation hose

- Check for secure fitting
- Note installed position ⇒ Fig. 1
- From Evaporative Emission (EVAP) Canister Purge Regulator Valve -N80- ⇒ Page 24-19 , item 5

8 - Throttle valve control module - 338-*

- Heated by coolant
- Components of Throttle Valve Control Module -J338-:Throttle Position (TP) Actuator -V60-, Throttle Position (TP) Sensor -G127-, Throttle Position (TP) Sensor -G69- and Closed Throttle Position (CTP) Switch -F60-
- Checking ⇒ Page 24-38
- Adjusting accelerator pedal cable ⇒ Page 20-50

9 - Connector

- 8-pin
- For Throttle Valve Control Module -J338-

24-17

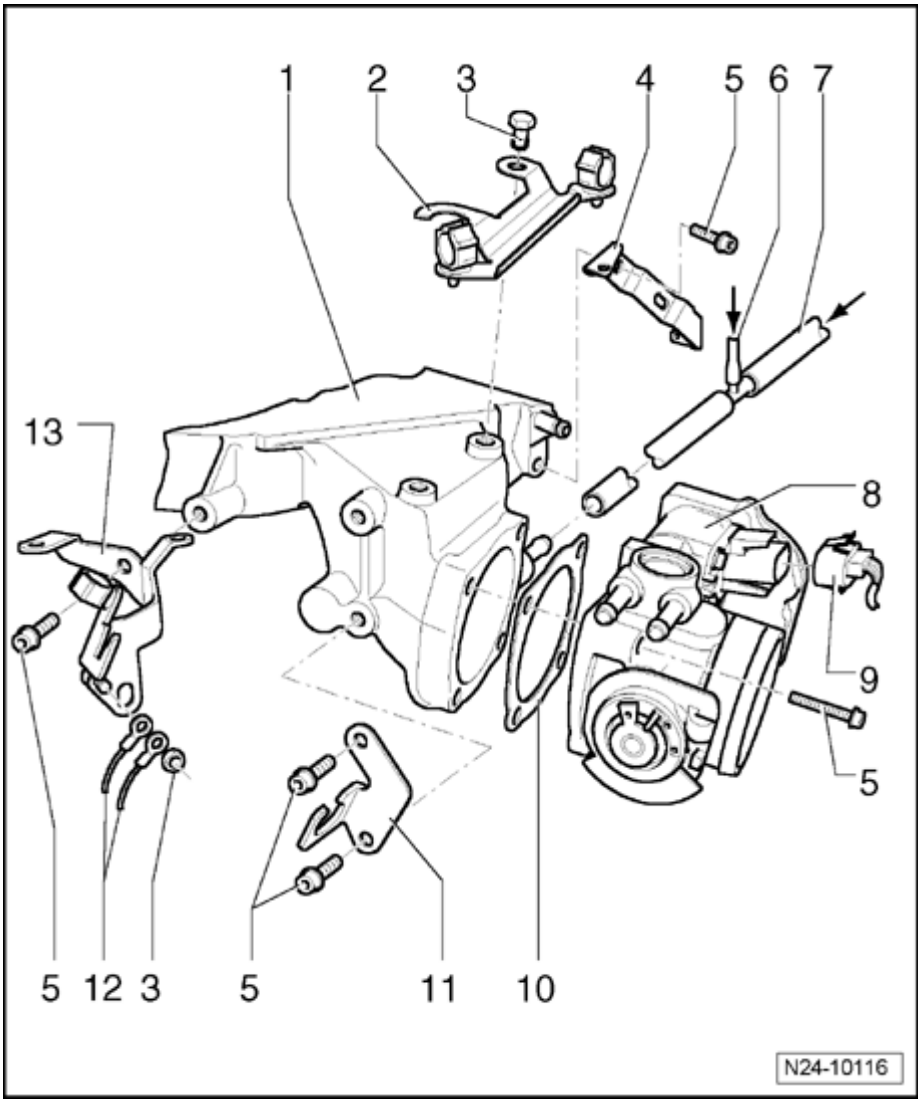

10 - Gasket

- Always replace

11 - Pivot

- For accelerator pedal cable
- Adjusting accelerator pedal cable ⇒ Page 20-50

12 - Ground (GND) wire

- Check for secure fitting

13 - Rear left support

- Between upper part of intake manifold and cylinder head
- With Ground (GND) connection, engine

24-18

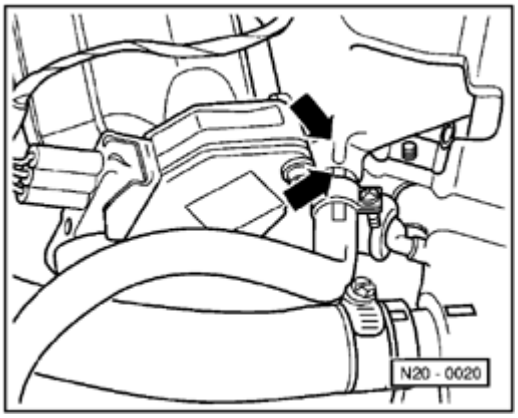

Fig. 1 Installed position of vent line on upper section of intake manifold

Marking on vent line must align with marking on upper section of intake manifold (arrows).

CAUTION!

Vent line must not come into contact with other components and must be routed over the hose for crankcase ventilation.

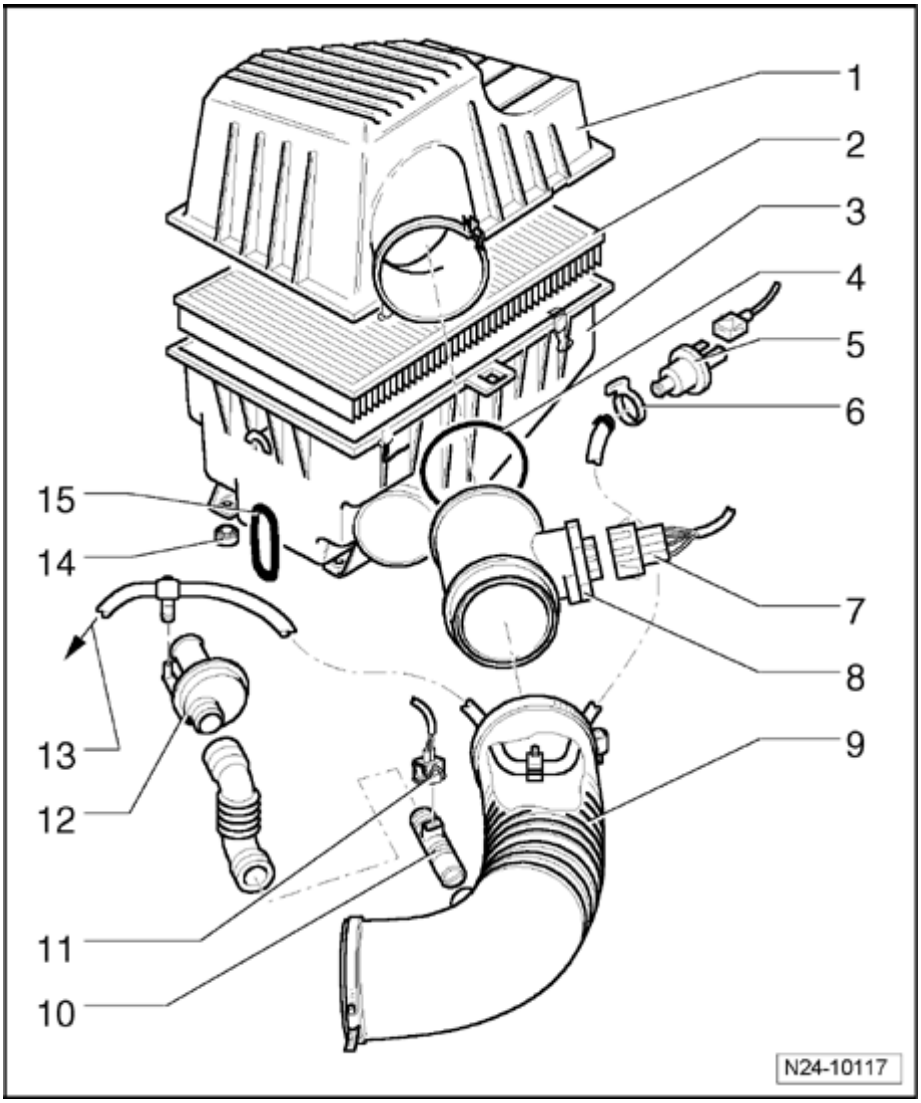

Air filter, disassembling and assembling

1 - Upper part of air filter

2 - Filter element

3 - Lower part of air filter

4 - O-ring

- Replace if damaged

5 - Evaporative Emission (EVAP) Canister Purge Regulator Valve -N80-*

- 2-pin connector
- Installation position: Arrow points in direction of flow
- Checking ⇒ Page 20-43

6 - Retaining ring

- For Evaporative Emission (EVAP) canister purge regulator valve -N80-

7 - Connector

- 4 pin
- For Mass Air Flow (MAF) Sensor -G70-

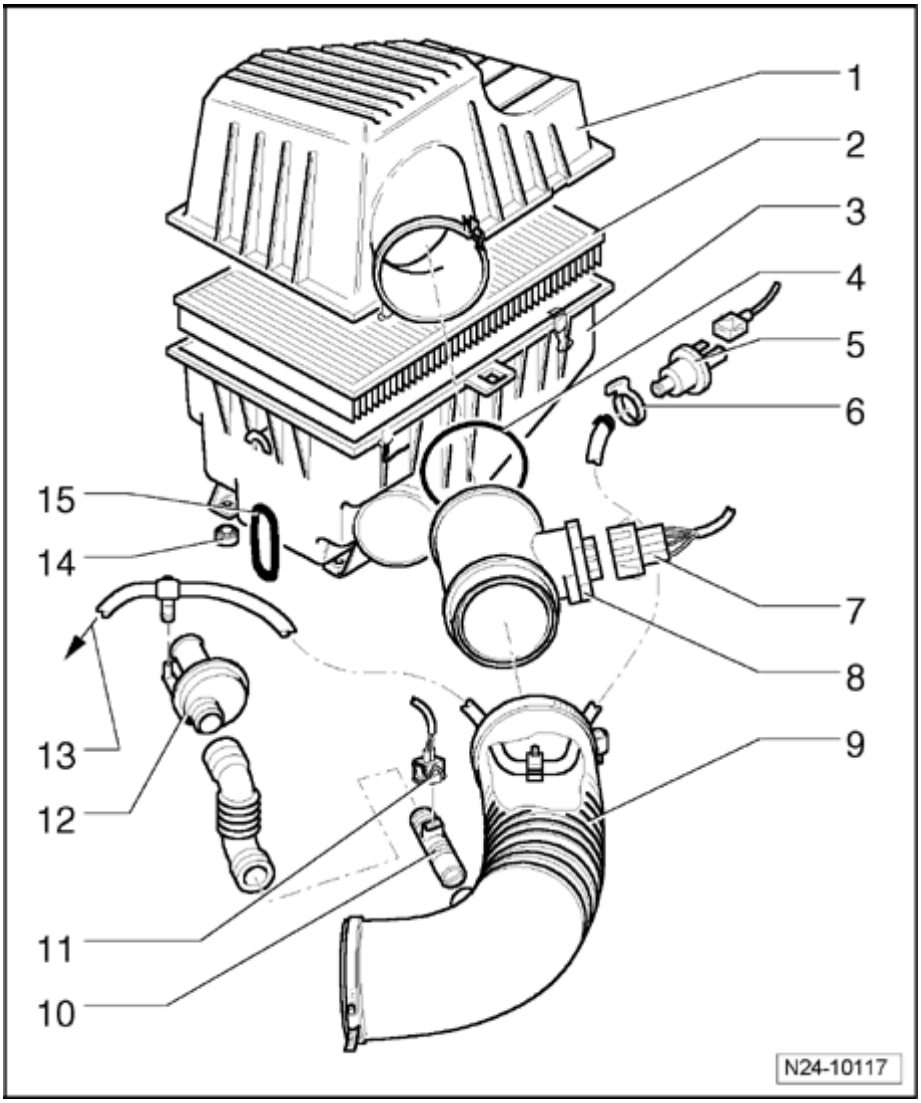

8 - Mass Air Flow (MAF) Sensor -G70-*

- Checking ⇒ Page 24-33

9 - Intake hose

- Check for secure fitting
- Note installed position

10 - Positive Crankcase Ventilation (PCV) Heating Element -N79-

- Arrow on heating element points in direction of stream
- Resistance at ambient temperature (approx. 25 ° C)

Specified value: 7 to 12 Ω

11 - Connector

- 2-pin
- For Positive Crankcase Ventilation (PCV) Heating Element -N79-
- Check voltage supply for PCV heating element between terminals 1 and 2 with engine running

Specified value: at least 11.5 V

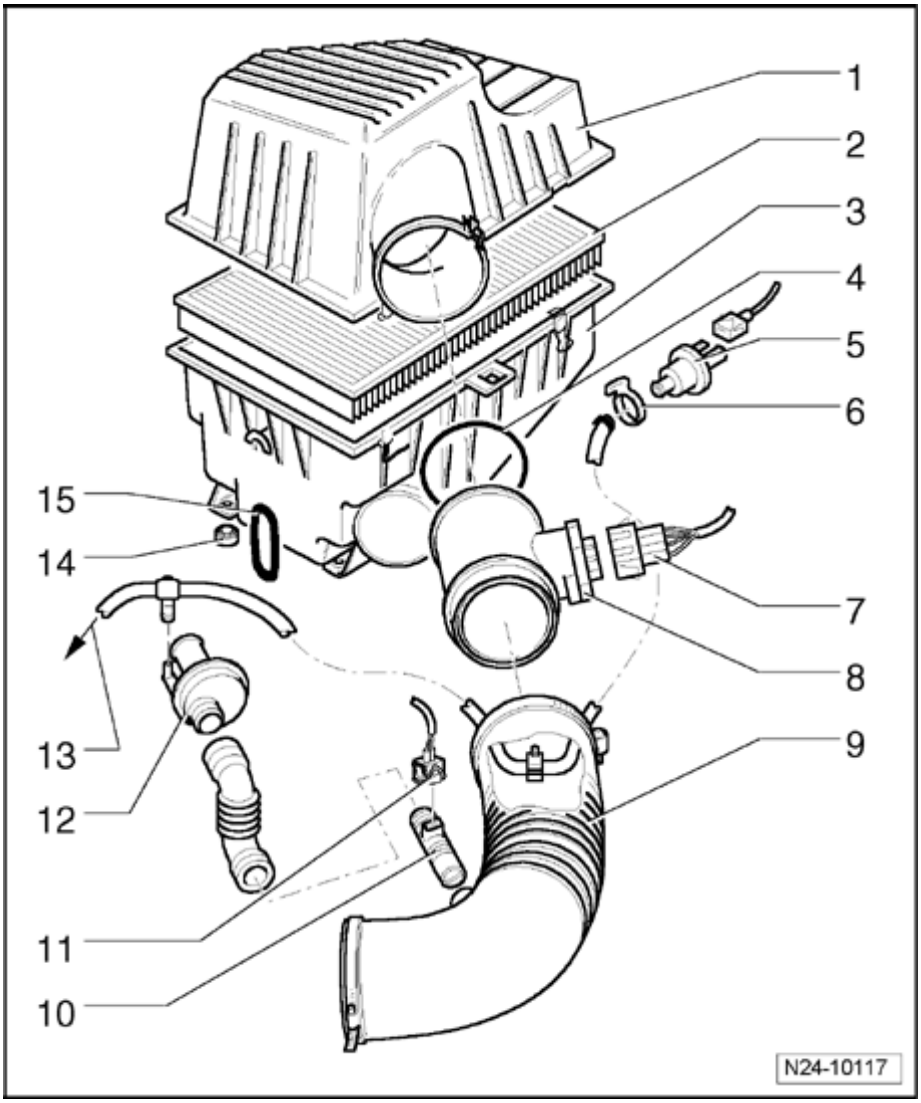

12 - Crankcase vent valve

13 - To upper part of intake manifold

- ⇒ Page 24-16 , item 7

14 - Rubber washer

15 - Retaining ring

- Replace if damaged

Safety precautions

CAUTION!

Observe the following for all installations, especially in engine compartment due to lack of room:

- ***Route lines of all types (e.g. for fuel, hydraulic, EVAP canister system, coolant and refrigerant, brake fluid, vacuum) and electrical wiring so that the original path is followed.***
- ***Shift selector lever into position -P- and engage parking brake before working with the engine running.***

WARNING

- ***Watch for sufficient clearance to all moving or hot components.***
- ***Fuel system is under pressure! Before loosening hose connections or separating points, place rags around the connection point. Then release pressure by carefully opening the fuel supply system.***
- ***The fuel or fuel lines in fuel system can become very hot (danger of scalding)!***
- ***Wear protective goggles and protective gloves when working on the fuel system!***

If special testing equipment is required during road test, note the following:

- Test equipment must always be secured to the rear seat and operated from there by a second person.

  If test and measuring equipment is operated from the passenger seat, the person seated there could be injured in the event of an accident involving deployment of the passenger-side airbag.

To reduce the risk of personal injury and/or damage to the fuel injection and ignition system, always observe the following:

- Do not touch or disconnect ignition wires when engine is running or turning at starting RPM.

- Only disconnect and reconnect wires for injection and ignition system, including test leads, when ignition is switched off.

- If engine is to be cranked at starting RPM without starting:

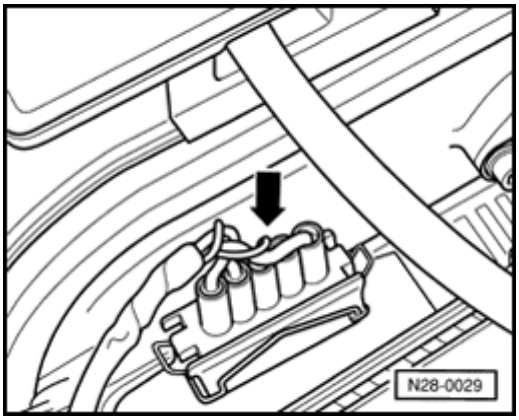

- Disconnect 5-pin connector (arrow) from Ignition Coil -N152-.

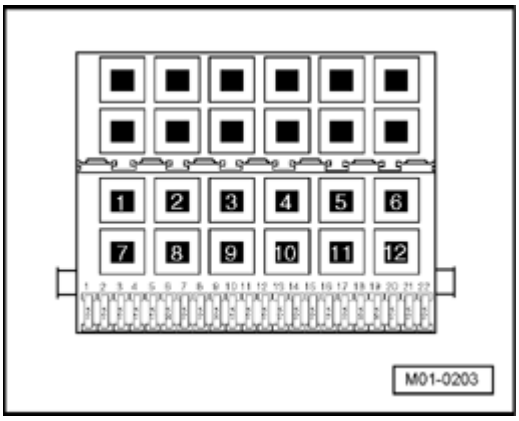

- Remove fuse 18 from fuse holder.

Note:

By removing fuse 18, voltage supply to the fuel pump is interrupted.

Rules of cleanliness

When working on the fuel supply or fuel injection system, the following "5 rules of cleanliness" should be carefully observed:

- Thoroughly clean all connections and the surrounding area before disconnecting.
- Place parts that have been removed on a clean surface and cover. Use lint-free cloths only!
- Carefully cover over opened components or seal, if repairs are not carried out immediately.
- Only install clean components: Only unpack replacement parts immediately prior to installation. Do not use parts that have been stored loose (in tool boxes etc.)
- When the system is open: Avoid working with compressed air if possible. Do not move vehicle unless absolutely necessary.

Technical data

Engine Code		AAA
Idle speed[1)]		650 to 750 RPM
Engine Control Module (ECM)[2)]		
	System identification	Motronic M5.9
	Terminals at Engine Control Module (ECM)	68
	Replacement part number	See parts catalog
	Engine speed (RPM) limitation	at approx. 6600 RPM

1) Not adjustable.

2) Replacing Engine Control Module (ECM) ⇒ Page 24-101

Engine components,checking

Oxygen sensor heater for oxygen sensor before Three Way Catalytic Converter (TWC), checking

Recommended special tools and equipment

- V.A.G 1526 multimeter or V.A.G 1715 multimeter
- V.A.G 1594 connector test kit
- Wiring diagram

Test requirements

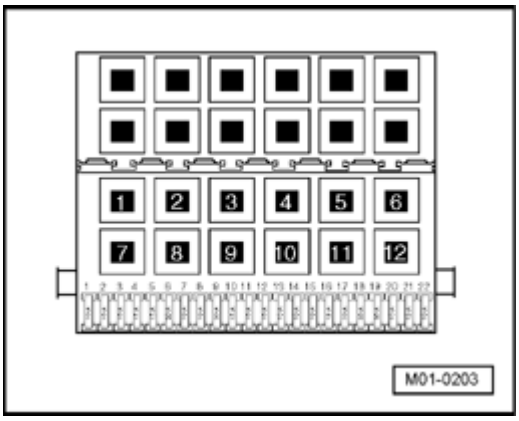

- The respective fuses of Heated Oxygen Sensor (HO2S) -G39- must be OK:

⇒ *Electrical Wiring Diagrams, Troubleshooting & Component Locations*

- Fuel Pump (FP) Relay -J17- must be OK, check:

⇒ *Electrical Wiring Diagrams, Troubleshooting & Component Locations*

- Ground (GND) connections between engine, transmission, and chassis must be OK.
- Ignition switched off.

24-28

Test sequence

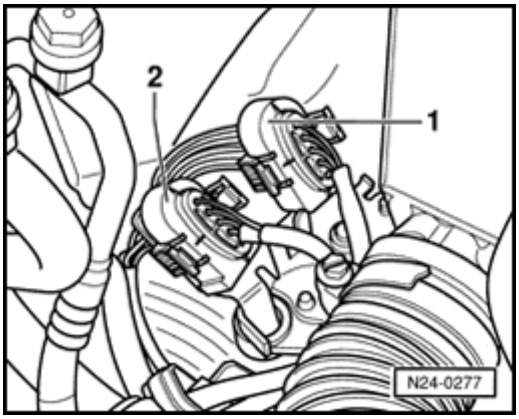

- Disconnect 4-pin harness connector (black) to Heated Oxygen Sensor (HO2S) -G39- (item no. 1).

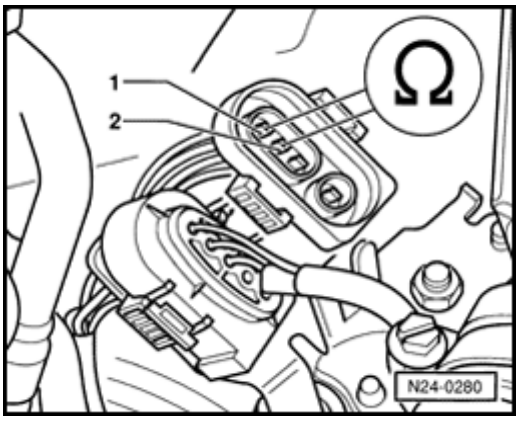

- Check resistance for sensor heater at connector to oxygen sensor terminal 1 + 2.

  Specified value: 1.0 to 24.2 Ω (at room temperature)

If specified value is not obtained:

- Replace Heated Oxygen Sensor (HO2S) 1 Bank 1 -G39- before catalytic converter ⇒ Page 24-9 , item 6 .
- Erase DTC memory of Engine Control Module (ECM) ⇒ Page ST-25 , Diagnostic mode 4: Reset/erase diagnostic data.
- Generate readiness code ⇒ Page ST-50 .

24-29

If specified value is obtained:

- Check Ground (GND) activation of oxygen sensor heater ⇒ Page 24-29 .

Checking Ground (GND) activation of oxygen sensor heating

- Connect test box to control module wiring harness ⇒ Page ST-10 , connect test box for wiring test.

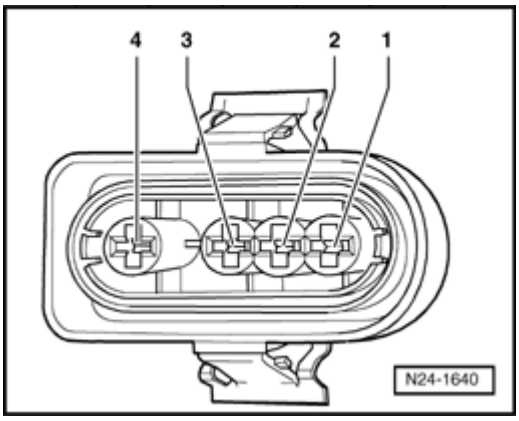

- Check wires between test box and 4-pin connector to Engine Control Module (ECM) for open circuit according to wiring diagram.

  Terminal 2 + socket 12

  Wire resistance: max. 1.5 Ω

- Check wires for short circuit to B+ and to Ground (GND).

Specified value: ∞ Ω

- Check wire between 4-pin connector terminal 1 and Fuel Pump (FP) Relay -J17- for open circuit according to wiring diagram.

  Wire resistance: max. 1.5 Ω

If no malfunctions are found in wires:

- Replace Motronic Engine Control Module (ECM) -J220- ⇒ Page 24-101 .

24-30

Oxygen sensor heater for oxygen sensors behind Three Way Catalytic Converter (TWC), checking

Recommended special tools and equipment

- V.A.G 1526 multimeter or V.A.G1715 multimeter
- V.A.G 1594 connector test kit
- Wiring diagram

Test requirements

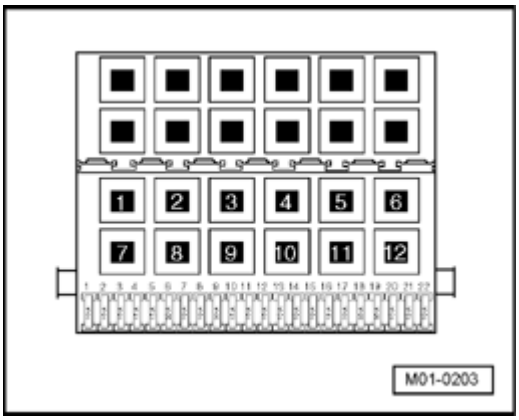

- The respective fuses of Heated Oxygen Sensor (HO2S) -G108- must be OK:

⇒ *Electrical Wiring Diagrams, Troubleshooting & Component Locations*

- Fuel Pump (FP) Relay -J17- must be OK, check:

⇒ *Electrical Wiring Diagrams, Troubleshooting & Component Locations*

- Ground (GND) connections between engine, transmission, and chassis must be OK.
- Ignition switched off.

24-31

Test sequence

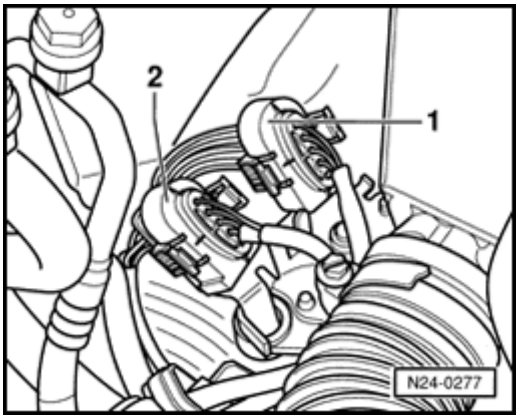

- Disconnect 4-pin harness connector (brown) to Heated Oxygen Sensor (HO2S) 2 -G108- (-2-).

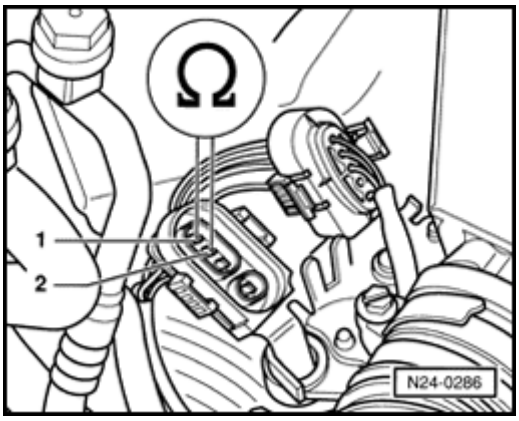

- Check resistance for sensor heater at connector to oxygen sensor terminal 1 + 2.

  Specified value: 1.0 to 24.2 Ω (at room temperature)

If specified value is not obtained:

- Replace Oxygen Sensor (O2S) 2 Bank 1 Behind Three Way Catalytic Converter (TWC) -G108- ⇒ Page 24-8 , item 5 .
- Erase DTC memory of Engine Control Module (ECM) ⇒ Page ST-25 , Diagnostic mode 4: Reset/erase diagnostic data.
- Generate readiness code ⇒ Page ST-50 .

If specified value is obtained:

- Check Ground (GND) activation of oxygen sensor heater ⇒ Page 24-32 .

Checking Ground (GND) activation of oxygen sensor heating

- Connect test box to control module wiring harness ⇒ Page ST-10 , connect test box for wiring test.

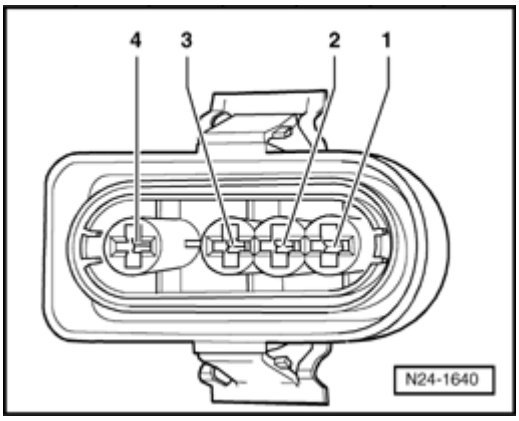

- Check wires between test box and 4-pin connector to Engine Control Module (ECM) for open circuit according to wiring diagram.

  Terminal 2 + socket 66

  Wire resistance: max. 1.5 Ω

- Check wires for short circuit to B+ and to Ground (GND).

  Specified value: ∞ Ω

- Check wire between 4-pin connector terminal 1 and Fuel Pump (FP) Relay -J17- for open circuit according to wiring diagram.

  Wire resistance: max. 1.5 Ω

If no malfunctions are found in wires:

- Replace Motronic Engine Control Module (ECM) -J220- ⇒ Page 24-101 .

24-33

Mass Air Flow (MAF) sensor, checking

Recommended special tools and equipment

- V.A.G 1526 multimeter or V.A.G1715 multimeter
- V.A.G 1594 connector test kit
- Wiring diagram

Test requirements

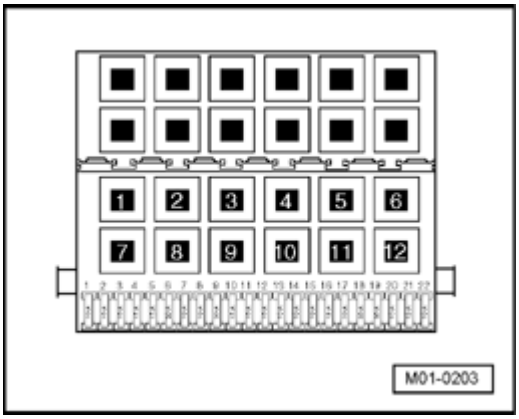

- The respective fuse of Mass Air Flow (MAF) Sensor -G70- must be OK:

⇒ *Electrical Wiring Diagrams, Troubleshooting & Component Locations*

- Fuel Pump (FP) Relay -J17- must be OK, check:

⇒ *Electrical Wiring Diagrams, Troubleshooting & Component Locations*

- Battery voltage must be at least 11.5 Volts.
- All electrical consumers such as, lights and rear window defroster must be switched off.

24-34

- Parking brake must be engaged or else daylight driving lights will be switched on.
- For vehicles with automatic transmission, selector lever must be in -P-.
- If vehicle is equipped with an A/C system, it must be switched off.
- Ground (GND) connections between engine, transmission, and chassis must be OK.
- Coolant temperature must be at least 80 ° C ⇒ Page ST-14 , Diagnostic mode 1: Check measured values; PID 5, Coolant temperature.

Function test

- Connect diagnostic tester ⇒ Page ST-7 .
- Start engine and let run at idle.
- Under address word 33, select "Diagnostic mode 1: Checking measured values."
- Select the measuring value "PID 16: Air flow quantity at Mass Air Flow (MAF) sensor".

- Check specified value of air flow quantity at Mass Air Flow (MAF) Sensor at idle:

PID	Diagnostic text	Specified value:
16:	Air flow quantity at Mass Air Flow (MAF) sensor	3.00 to 5.00 g/sec
	• Engine running at idle	

- End diagnosis and switch ignition off.

If specified value is obtained, but DTC memory has a DTC concerning Mass Air Flow (MAF) sensor:

- Check voltage supply of Mass Air Flow (MAF) sensor ⇒ Page 24-36 .

If specified value is not obtained:

- Check signal and Ground (GND) wires of Mass Air Flow (MAF) sensor ⇒ Page 24-37 .

Voltage supply for Mass Air Flow (MAF) sensor, checking

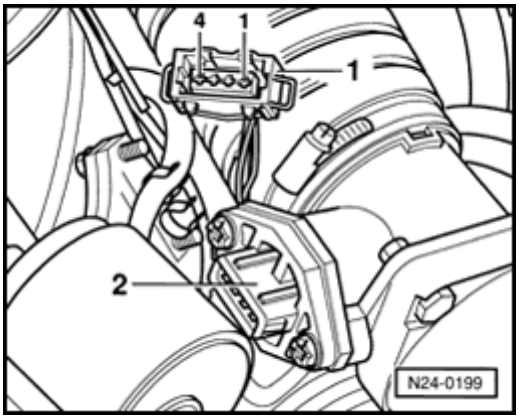

- Disconnect 4-pin connector -1- from Mass Air Flow (MAF) Sensor -G70- (-2-).
- Connect multimeter to terminals 1 + 3 of connector for voltage measurement.
- Start engine, and let run at idle.

  Specified value: 11.0 to 15.0 V
- Switch ignition off.

If there is no voltage:

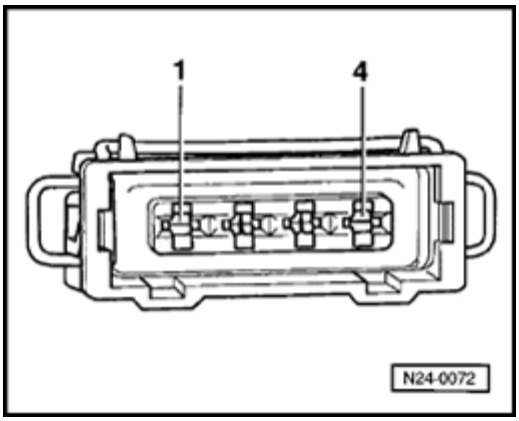

- Check wire between 4-pin connector terminal 3 and Fuel Pump (FP) Relay -J17- for open circuit according to wiring diagram.

  Wire resistance: max. 1.5 Ω
- Check wire to terminal 1 of 4-pin connector for open circuit according to wiring diagram:

⇒ *Electrical Wiring Diagrams, Troubleshooting & Component Locations*

If voltage supply and wires are OK:

- Check wires of Mass Air Flow (MAF) sensor ⇒ Page 24-37 .

24-37

Check wires for Mass Air Flow (MF) sensor

- Connect test box to control module wiring harness ⇒ Page ST-10 , connect test box for wiring test.

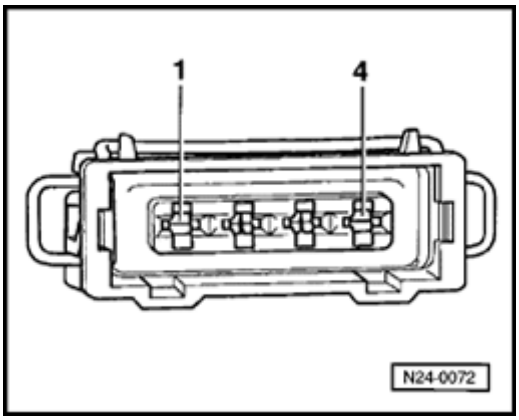

- Check wires between test box and 4-pin connector to Engine Control Module (ECM) for open circuit according to wiring diagram.

  Terminal 2 + socket 16

  Terminal 4 + socket 17

  Wire resistance: max. 1.5 Ω

- Check wires for short circuit to each other, to vehicle Ground (GND) and to B+.

  Specified value: ∞ Ω

If no DTCs are found in wires:

- Replace Mass Air Flow (MAF) Sensor -G70- ⇒ Page 24-20 , item 8 .
- Erase DTC memory of Engine Control Module (ECM) ⇒ Page ST-25 , Diagnostic mode 4: Reset/erase diagnostic data.
- Generate readiness code ⇒ Page ST-50 .

24-38

Throttle valve control module, checking

Recommended special tools and equipment

- V.A.G 1526 multimeter or V.A.G1715 multimeter
- V.A.G 1594 connector test kit
- Wiring diagram

Test requirements

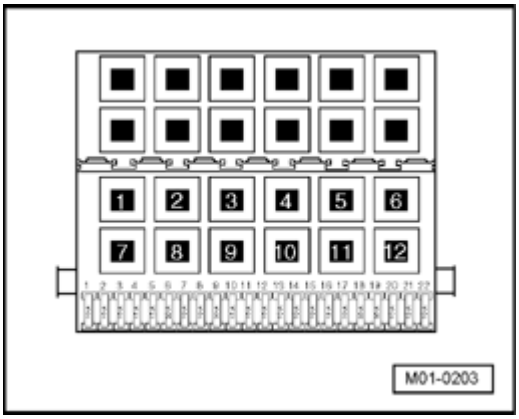

- The respective fuses of Motronic Engine Control Module (ECM) -J220- must be OK:

⇒ *Electrical Wiring Diagrams, Troubleshooting & Component Locations*

- Battery voltage must be at least 11.5 Volts.
- All electrical consumers such as, lights and rear window defroster must be switched off.
- If vehicle is equipped with an A/C system, it must be switched off.
- Parking brake must be engaged or else daylight driving lights will be switched on.

- Ground (GND) connections between engine, transmission, and chassis must be OK.
- For vehicles with automatic transmission, selector lever must be in -P-.
- Throttle valve must not be damaged or dirty.
- Throttle valve must be in Closed Throttle Position (CTP).
- Adjustment of accelerator pedal cable must be OK ⇒ Page 20-50 , adjusting accelerator pedal cable.
- Coolant temperature must be at least 80 ° C ⇒ Page ST-14 , Diagnostic mode 1: Check measured values; PID 5, Coolant temperature.

Function

Components of throttle valve control -J338-:

- Closed Throttle Position (CTP) Switch -F60-
- Throttle Position (TP) sensor -G69-
- Throttle Position (TP) Sensor -G127-
- Throttle Position (TP) Actuator -V60-

24-40

If the complete throttle valve control module is current-less (e.g. connector disconnected) the throttle valve moves into a particular, specified mechanical position, which signals an increased idle speed with an engine at operating temperature.

If only the Throttle Position (TP) Actuator -V60- is current-less, the throttle valve also moves into the specified mechanical position (emergency running gap), however, since Closed Throttle Position (CTP) Switch -F60- can still be recognized, an "almost normal idle RPM" is reached via the respective ignition angle retardation.

If the Engine Control Module (ECM) detects a malfunction at Throttle Position (TP) Sensor -G69-, Throttle Position (TP) Actuator -V60- is switched current-less by the Engine Control Module (ECM) and the throttle valve moves into the specified mechanical position (emergency running gap) again.

Function test

- Connect diagnostic tester ⇒ Page ST-7 .
- Switch ignition on.
- Under address word 33, select "Diagnostic mode 1: Checking measured values."
- Select the measuring value "PID 17: Throttle valve position (absolute)."

24-41

- Check specified value of throttle valve position (absolute) at idle stop:

PID	Diagnostic text	Specified value:
17:	Throttle valve position (absolute)	
	• Idle stop	0.0 to 7.0%

- Slowly depress accelerator pedal up to Wide Open Throttle (WOT) stop while observing the percentage display.

  The percentage display must increase uniformly.

- Check specified value of throttle valve position (absolute) at Wide Open Throttle (WOT) stop:

PID	Diagnostic text	Specified value:
17:	Throttle valve position (absolute)	
	• Wide Open Throttle (WOT) stop	80.0 to 100.0%

- End diagnosis and switch ignition off.

24-42

If specified values are not obtained:

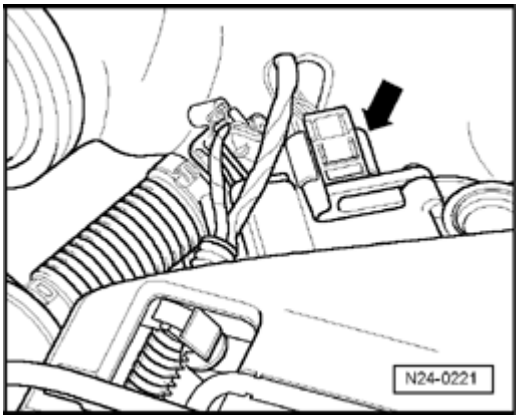

- Disconnect 8-pin connector at throttle valve control module (arrow).
- Check resistance of throttle valve control module ⇒ Page 24-42 .

Checking resistance

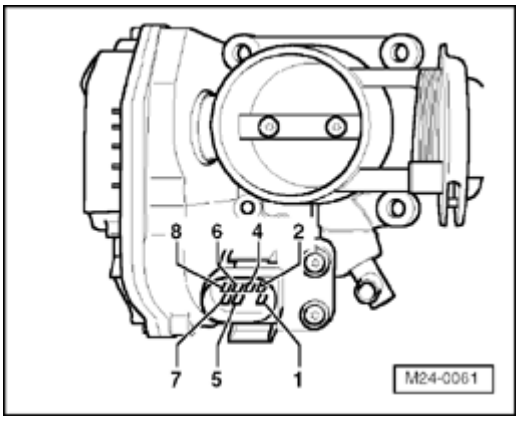

- Measure resistance of Throttle Position (TP) Actuator -V60- between the terminals 1 + 2.

  Specified value: 3.0 to 200.0 Ω (at room temperature)
- Measure resistance of Closed Throttle Position (CTP) Switch -F60- between terminals 3 + 7 in idle position.

  Specified value: Max. 10.0 Ω (at room temperature)
- Slowly open throttle valve up to Wide Open Throttle (WOT)

  Specified value: ∞ Ω.

If specified values are not obtained:

24-43

- Replace Throttle Valve Control Module -J338- ⇒ Page 24-16 , item 8 .

- Erase DTC memory of Engine Control Module (ECM) ⇒ Page ST-25 , Diagnostic mode 4: Reset/erase diagnostic data.

- Generate readiness code ⇒ Page ST-50 .

If specified values are obtained:

- Check voltage supply of throttle valve control module and wiring to control module ⇒ Page 24-44 .

If voltage supply and wires are OK:

- Replace Motronic Engine Control Module (ECM) -J220- ⇒ Page 24-101 .

24-44

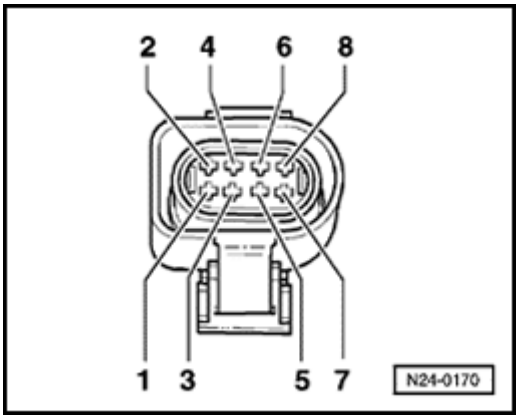

Checking voltage supply and wiring to control module

- Connect multimeter to terminals 3 + 7 of connector for voltage measurement.
- Switch ignition on.

  Specified value: at least 9.0 V
- Switch ignition off.
- Connect multimeter to terminals 4 + 7 of connector for voltage measurement.
- Switch ignition on.

  Specified value: at least 4.5 V
- Switch ignition off.

If specified values are not obtained:

- Connect test box to control module wiring harness ⇒ Page ST-10 , connect test box for wiring test.

24-45

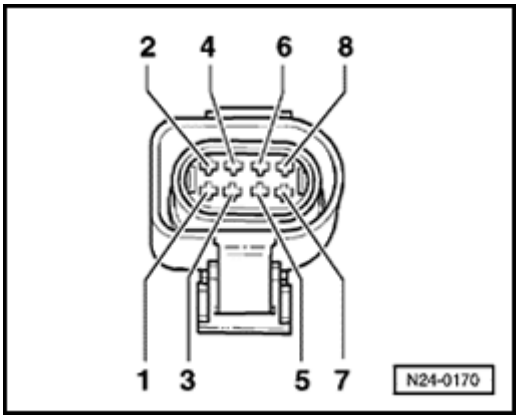

- Check wires between test box and 8-pin connector to Engine Control Module (ECM) for open circuit according to wiring diagram.

  Terminal 1 + socket 27

  Terminal 2 + socket 53

  Terminal 3 + socket 10

  Terminal 4 + socket 41

  Terminal 5 + socket 40

  Terminal 7 + socket 33

  Terminal 8 + socket 62

  Wire resistance: max. 1.5 Ω

- Check wires for short circuit to each other, to vehicle Ground (GND) and to B+.

  Specified value: ∞ Ω

If no malfunctions are found in wires:

- Check voltage supply of Engine Control Module (ECM) ⇒ Page 24-97 .
- Erase DTC memory of Engine Control Module (ECM) ⇒ Page ST-25 , Diagnostic mode 4: Reset/erase diagnostic data.
- Generate readiness code ⇒ Page ST-50 .

24-46

Engine Coolant Temperature (ECT) sensor, checking

Recommended special tools and equipment

- V.A.G 1526 multimeter or V.A.G1715 multimeter
- V.A.G 1594 connector test kit
- Wiring diagram

Test requirements

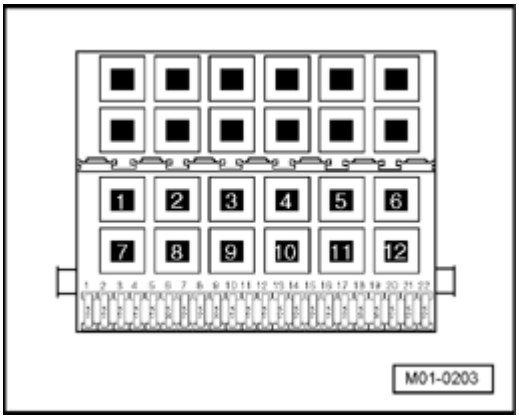

- The respective fuses of Motronic Engine Control Module (ECM) -J220- must be OK:

⇒ *Electrical Wiring Diagrams, Troubleshooting & Component Locations*

- Parking brake must be engaged or else daylight driving lights will be switched on.
- For vehicles with automatic transmission, selector lever must be in -P-.
- Engine must be cold.

24-47

Function test

- Connect diagnostic tester ⇒ Page ST-7 .
- Switch ignition on.
- Under address word 33, select "Diagnostic mode 1: Checking measured values."
- Select the measuring value "PID 05: Coolant temperature".
- Check specified value of coolant temperature:

PID	Diagnostic text	Specified value:
05:	Coolant temperature	approx. coolant temperature

24-48

If specified value is not obtained:

- Continue test according to the following table:

Indicated[1)]	Cause	Continue testing
approx. -46.0 ° C	Open circuit or short circuit to B+	⇒ Page 24-49
approx. 141.0 ° C	Short circuit to Ground (GND)	⇒ Page 24-51

[1)] If a temperature is indicated which differs greatly from ambient temperature of sensor, check sensor wires for contact resistance.

If specified value is obtained:

- Start engine and let run at idle. The temperature must climb uniformly

Note:

- *The temperature increases in increments of 1.5 ° C .*
- *If the engine shows problems in certain temperature ranges and if the temperature does not climb uniformly, the temperature signal is intermittent and the sensor should be replaced.*

24-49

Continuation of test if on display: approx. -46.0 ° C:

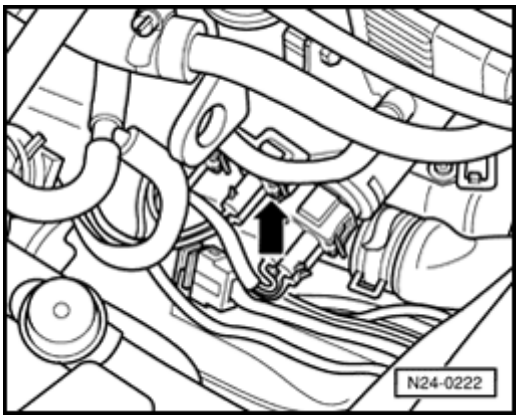

- Disconnect 2-pin connector from Engine Coolant Temperature (ECT) Sensor (arrow).

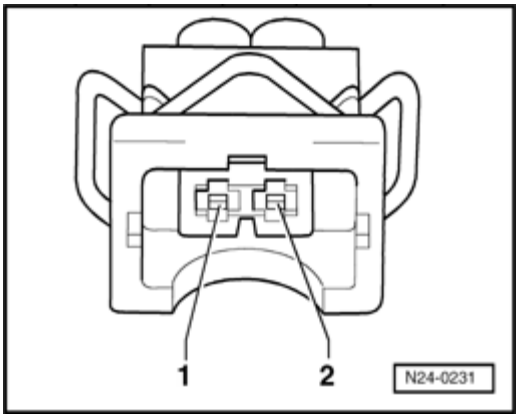

- Bridge terminals 1 + 2 of connector using the respective adapter cables and observe the indication on display.

24-50

If indication jumps to approx. 141.0 ° C:

- End diagnosis and switch ignition off.

- Replace Engine Coolant Temperature (ECT) Sensor -G62- ⇒ Page 24-10 , item 7 .

WARNING!

- ***Cooling system is under pressure.***

- ***Danger of scalding when opening!***

- Erase DTC memory of Engine Control Module (ECM) ⇒ Page ST-25 , Diagnostic mode 4: Reset/erase diagnostic data.

- Generate readiness code ⇒ Page ST-50 .

If indication remains at approx. -46.0 ° C:

- End diagnosis and switch ignition off.

- Check wires according to wiring diagram ⇒ Page 24-52 .

24-51

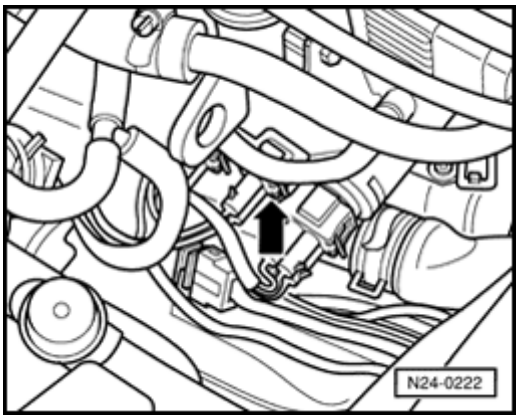

Continuation of test if indication is approx. 141.0 ° C:

- Disconnect 2-pin connector from Engine Coolant Temperature (ECT) Sensor (arrow).

If indication jumps to approx. -46.0 ° C:

- End diagnosis and switch ignition off.
- Replace Engine Coolant Temperature (ECT) Sensor -G62- ⇒ Page 24-10 , item 7 .

WARNING!

- ***Cooling system is under pressure.***
- ***Danger of scalding when opening!***

- Erase DTC memory of Engine Control Module (ECM) ⇒ Page ST-25 , Diagnostic mode 4: Reset/erase diagnostic data.
- Generate readiness code ⇒ Page ST-50 .

24-52

If indication remains at approx. 141.0 ° C:

- End diagnosis and switch ignition off.

- Check wires according to wiring diagram ⇒ Page 24-52 .

Checking wiring

- Connect test box to control module wiring harness ⇒ Page ST-10 , connect test box for wiring test.

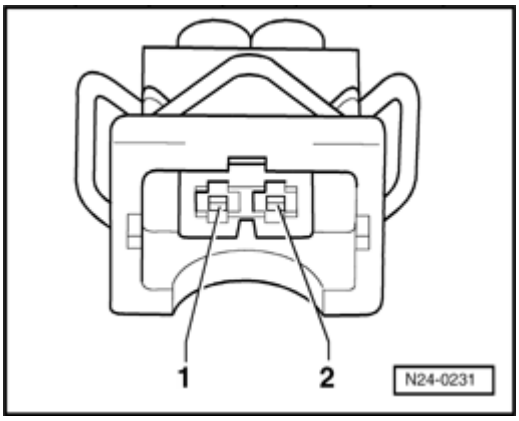

- Check wires between test box and 2-pin connector to Engine Control Module (ECM) for open circuit according to wiring diagram.

  Terminal 1 + socket 14

  Terminal 2 + socket 33

  Wire resistance: max. 1.5 Ω

- Check wires for short circuit to each other, to vehicle Ground (GND) and to B+.

  Specified value: ∞ Ω

24-53

If no malfunctions are found in wires:

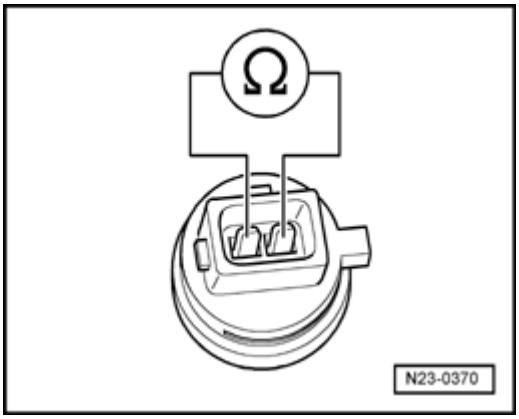

- Measure resistance at Engine Coolant Temperature (ECT) Sensor -G62-.

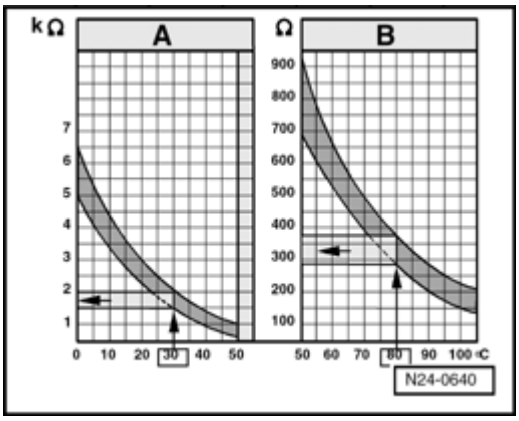

Range A displays resistance values for the temperature range of 0 to 50 °C, range B displays resistance values for the temperature range of 50 to 100 °C.

Read-out examples:

- 30 °C is in range A and corresponds to a resistance of 1.5 to 2.0 kΩ
- 80 °C is in range B and corresponds to a resistance of 275 to 375 Ω

24-54

If specified value is not obtained:

- Replace Engine Coolant Temperature (ECT) Sensor -G62- ⇒ Page 24-10 , item 7 .

WARNING!

- ***Cooling system is under pressure.***
- ***Danger of scalding when opening!***

- Erase DTC memory of Engine Control Module (ECM) ⇒ Page ST-25 , Diagnostic mode 4: Reset/erase diagnostic data.

- Generate readiness code ⇒ Page ST-50 .

If no malfunctions are detected in the wires and the resistance values are OK:

- Replace Motronic Engine Control Module (ECM) -J220- ⇒ Page 24-101 .

24-55

Intake Air Temperature (IAT) Sensor, checking

Recommended special tools and equipment

- V.A.G 1526 multimeter or V.A.G1715 multimeter
- V.A.G 1594 connector test kit
- Wiring diagram
- Chilling spray (commercially available)

Test requirements

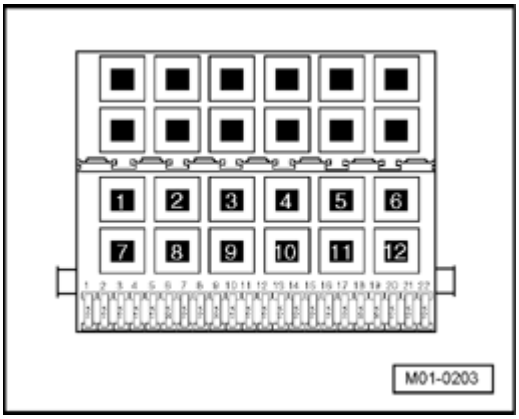

- The respective fuses of Motronic Engine Control Module (ECM) -J220- must be OK:

⇒ *Electrical Wiring Diagrams, Troubleshooting & Component Locations*

- Parking brake must be engaged or else daylight driving lights will be switched on.
- For vehicles with automatic transmission, selector lever must be in -P-.

Function test

- Connect diagnostic tester ⇒ Page ST-7 .
- Switch ignition on.

- Under address word 33, select "Diagnostic mode 1: Checking measured values."

- Select the measuring value "PID 15: Intake air temperature".

- Check specified value of intake air temperature:

PID	Diagnostic text	Specified value:
15:	Intake Air Temperature (intake manifold temperature)	approx. ambient temperature

If specified value is not obtained:

- Continue test according to the following table:

Indicated[1)]	Cause	Continue testing
approx. -46.5 ° C	Open circuit or short circuit to B+	⇒ Page 24-58
approx. 141.0 ° C	Short circuit to Ground (GND)	⇒ Page 24-59

[1)] If a temperature is indicated which is below the ambient temperature of sensor, first check sensor wires for contact resistance. Note that while the vehicle is standing still the sensor might warm up due to radiant heat.

24-57

If specified value is obtained:

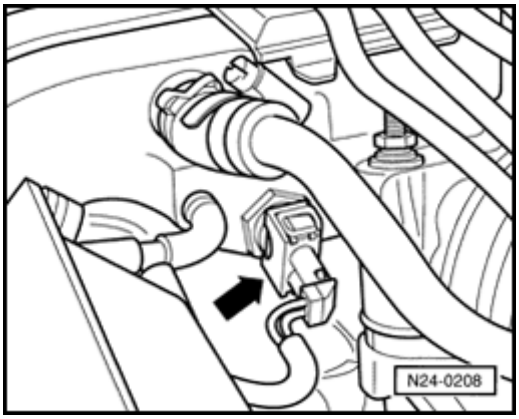

- Disconnect 2-pin connector from Intake Air Temperature (IAT) Sensor (arrow).

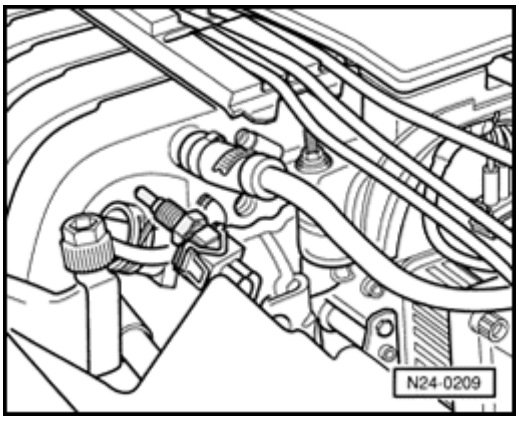

- Unscrew Intake Air Temperature (IAT) Sensor - G72- and reconnect to connector.
- Seal threaded bore for sensor.
- Remember the intake air temperature value.
- Spray sensor with commercially available chilling spray while observing the temperature value. Temperature must decrease.
- End diagnosis and switch ignition off.

24-58

If the intake air temperature does not drop:

- Replace Intake Air Temperature (IAT) Sensor - G72- ⇒ Page 24-14 , item 16 .

- Erase DTC memory of Engine Control Module (ECM) ⇒ Page ST-25 , Diagnostic mode 4: Reset/erase diagnostic data.

- Generate readiness code ⇒ Page ST-50 .

Continuation of test if display shows -46.5 ° C:

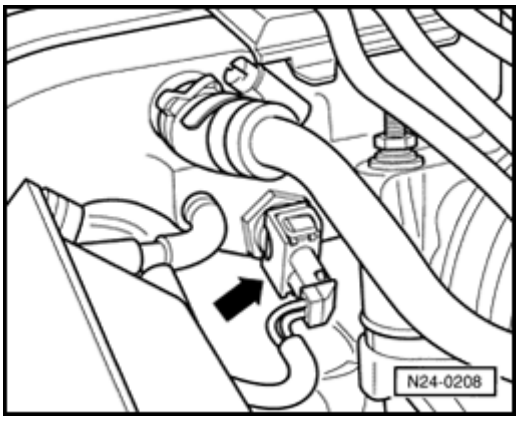

- Disconnect 2-pin connector from Intake Air Temperature (IAT) Sensor (arrow).

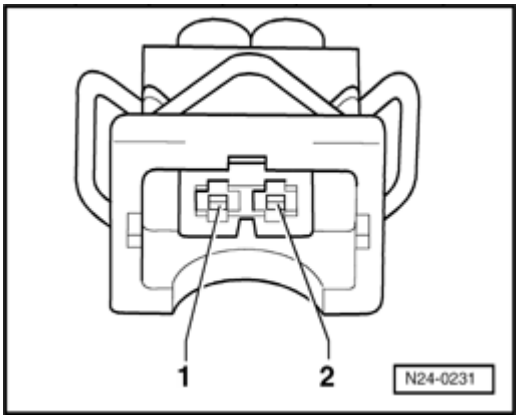

- Bridge terminals 1 + 2 of connector using the respective adapter cables while observing the indication on display.

If indication jumps to approx. 141.0 ° C:

- End diagnosis and switch ignition off.
- Replace Intake Air Temperature (IAT) Sensor - G72- ⇒ Page 24-14 , item 16 .

- Erase DTC memory of Engine Control Module (ECM) ⇒ Page ST-25 , Diagnostic mode 4: Reset/erase diagnostic data.

- Generate readiness code ⇒ Page ST-50 .

If indication remains at approx. -46.5 ° C:

- End diagnosis and switch ignition off.

- Check wires according to wiring diagram ⇒ Page 24-60 .

Continuation of test if display shows 141.0 ° C:

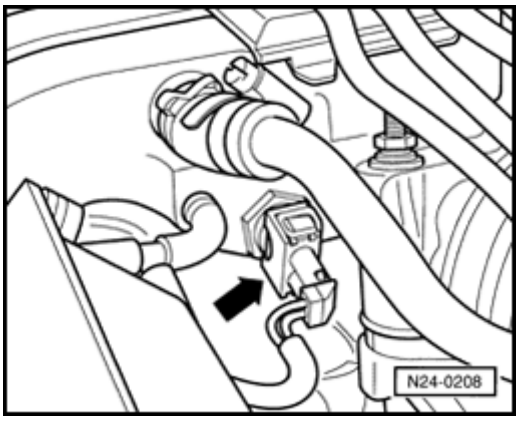

- Disconnect 2-pin connector from Intake Air Temperature (IAT) Sensor (arrow).

If indication jumps to approx. -46.5 ° C:

- End diagnosis and switch ignition off.
- Replace Intake Air Temperature (IAT) Sensor - G72- ⇒ Page 24-14 , item 16 .
- Erase DTC memory of Engine Control Module (ECM) ⇒ Page ST-25 , Diagnostic mode 4: Reset/erase diagnostic data.
- Generate readiness code ⇒ Page ST-50 .

If the indication remains at 141.0 ° C:

- End diagnosis and switch ignition off.

- Check wires according to wiring diagram ⇒ Page 24-60 .

Checking wiring

- Connect test box to control module wiring harness ⇒ Page ST-10 , connect test box for wiring test.

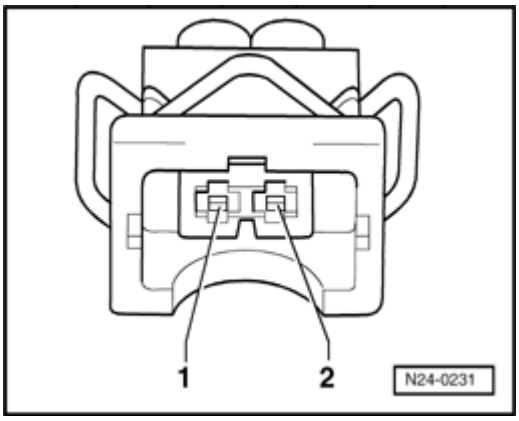

- Check wires between test box and 2-pin connector to Engine Control Module (ECM) for open circuit according to wiring diagram.

  Terminal 1 + socket 36

  Terminal 2 + socket 33

  Wire resistance: max. 1.5 Ω

- Check wires for short circuit to each other, to vehicle Ground (GND) and to B+.

  Specified value: ∞ Ω

If no malfunctions are found in wire:

- Check resistance of Intake Air Temperature (IAT) Sensor -G72- terminals 1 + 2.

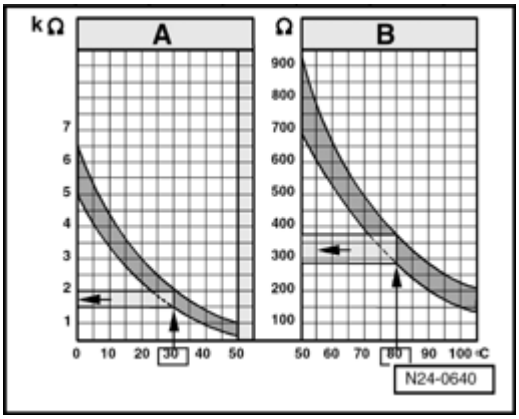

Range A displays resistance values for the temperature range of 0 to 50 °C, range B displays resistance values for the temperature range of 50 to 100 °C.

Read-out examples:

- 30 °C is in range A and corresponds to a resistance of 1.5 to 2.0 kΩ
- 80 °C is in range B and corresponds to a resistance of 275 to 375 Ω

If specified value is not obtained:

- Replace Intake Air Temperature (IAT) Sensor - G72- ⇒ Page 24-14 , item 16 .
- Erase DTC memory of Engine Control Module (ECM) ⇒ Page ST-25 , Diagnostic mode 4: Reset/erase diagnostic data.
- Generate readiness code ⇒ Page ST-50 .

If no malfunctions are detected in the wires and the resistance values are OK:

- Replace Motronic Engine Control Module (ECM) - J220- ⇒ Page 24-101 .

24-62

Engine speed (RPM) sensor, checking

Function

The Engine Speed (RPM) Sensor -G28- detects engine speed and reference marks. Without an engine speed signal, the engine will not start. If the engine speed signal fails while the engine is running, the engine will stop immediately.

Recommended special tools and equipment

- V.A.G 1526 multimeter or V.A.G1715 multimeter
- V.A.G 1594 connector test kit
- Wiring diagram

Test sequence

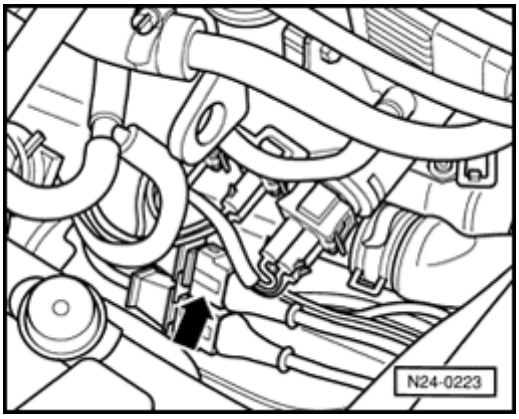

- Disconnect white 3-pin harness connector to engine speed (RPM) sensor (arrow).

24-63

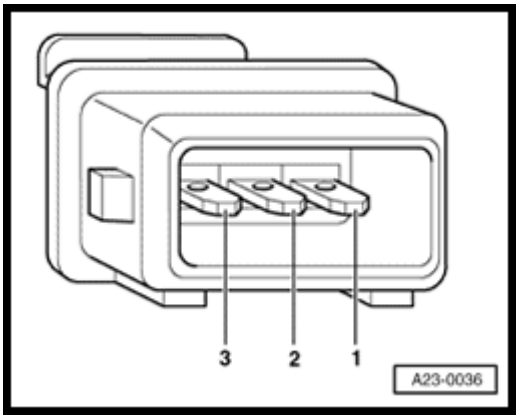

- Measure resistance of sensor between terminals 1 + 2 of connector. Specified value: 480 to 1000 Ω
- Check sensor for short circuit between terminals 1 +3 and 2 + 3.

  Specified value: ∞ Ω

If specified values are not obtained:

- Replace Engine Speed (RPM) Sensor -G28- ⇒ Page 24-10 , item 11 .
- Erase DTC memory of Engine Control Module (ECM) ⇒ Page ST-25 , Diagnostic mode 4: Reset/erase diagnostic data.
- Generate readiness code ⇒ Page ST-50 .

If no DTC is found on sensor:

- Connect test box to control module wiring harness ⇒ Page ST-10 , connect test box for wiring test.

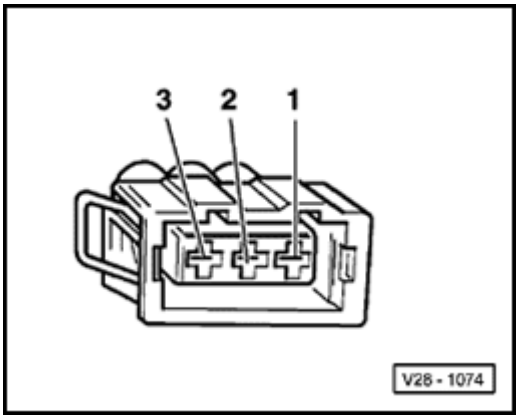

- Check wires between test box and 3-pin connector to Engine Control Module (ECM) for open circuit according to wiring diagram.

  Terminal 1 + socket 67

  Terminal 2 + socket 68

  Terminal 3 + socket 56

  Wire resistance: max. 1.5 Ω

- Check wires for short circuit to each other, to vehicle Ground (GND) and to B+.

  Specified value: ∞ Ω

If no malfunctions are found in wires:

- Remove sensor and check sensor wheel for secure fit, damage, and run-out.

Note:

There is a larger-sized gap on the sensor wheel. This gap is the reference mark and does not mean that the sensor wheel is damaged.

If nothing seems to be wrong with the sensor wheel:

- Replace Motronic Engine Control Module (ECM) - J220- ⇒ Page 24-101 .

24-65

Fuel injectors, checking

Recommended special tools and equipment

- V.A.G 1526 multimeter or V.A.G1715 multimeter
- V.A.G 1527 voltage test lamp
- V.A.G 1594 connector test kit
- Wiring diagram

Test requirements

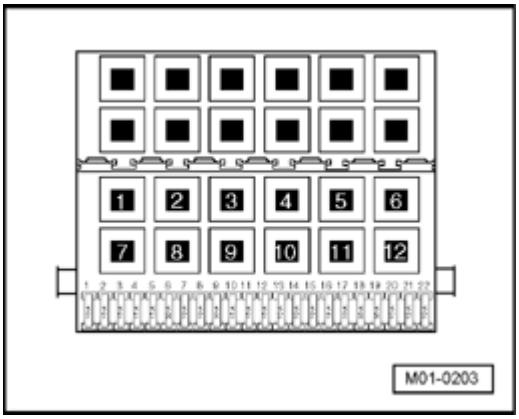

- The respective fuses of fuel injectors (-N30- to -N33-, -N83-, -N84-) must be OK:

⇒ *Electrical Wiring Diagrams, Troubleshooting & Component Locations*

- Fuel Pump (FP) Relay -J17- must be OK, check:

⇒ *Electrical Wiring Diagrams, Troubleshooting & Component Locations*

- Battery voltage must be at least 11.5 Volts.
- All electrical consumers such as, lights and rear window defroster must be switched off.

- Parking brake must be engaged or else daylight driving lights will be switched on.
- For vehicles with automatic transmission, selector lever must be in -P-.
- If vehicle is equipped with an A/C system, it must be switched off.
- Ground (GND) connections between engine, transmission, and chassis must be OK.
- Engine Speed (RPM) Sensor -G28- OK, check ⇒ Page 24-62 .
- Ignition switched off.

Test sequence

Observe safety precautions ⇒ Page 24-22 .

Observe rules for cleanliness ⇒ Page 24-25 .

- Remove spark plugs with ignition wires ⇒ Page 28-3 , Ignition components, removing and installing

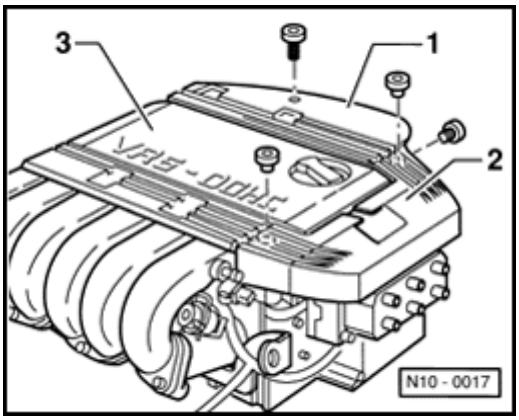

- Remove ignition wire guides -1- and -2-.
- Remove cover over upper section of intake manifold -3-.

24-67

- Remove intake manifold upper part ⇒ Page 24-12 , item 1 .

- Disconnect fuel injector connectors.

Resistance values of fuel injectors, checking

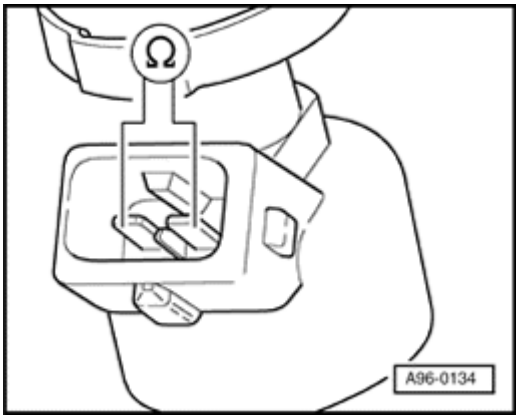

- Test resistance of fuel injectors between terminals.

  Specified value: 15.0 to 21.5 Ω

Note:

Resistance value is valid at approx. 20° C. At higher temperatures, resistance value increases.

If specified value is not obtained:

- Replace malfunctioning fuel injector ⇒ Page 24-13 , item 12 .

Note the following when installing the fuel injectors:

- Replace O-rings on all fuel injectors and wet them slightly with clean motor oil.

24-68

- Insert fuel injectors into fuel distributor perpendicular and in the right position, and secure them with retaining clips.

- Position fuel distributor on lower part of intake manifold using secured fuel injectors and apply uniform pressure to press it in.

- The connectors must audibly engage on valves when attached.

- Erase DTC memory of Engine Control Module (ECM) ⇒ Page ST-25 , Diagnostic mode 4: Reset/erase diagnostic data.

- Generate readiness code ⇒ Page ST-50 .

Checking voltage supply

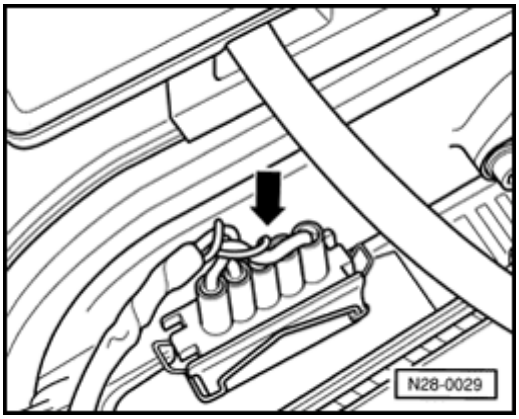

- Disconnect 5-pin connector (arrow) from Ignition Coil -N152-.

24-69

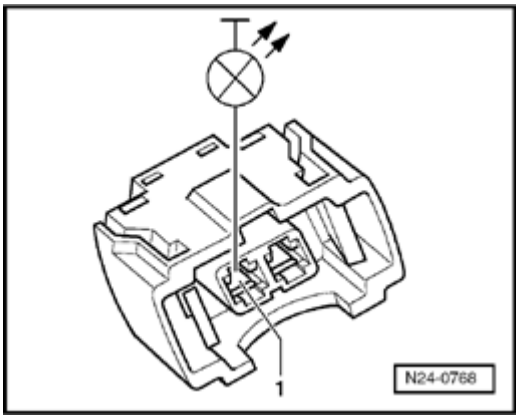

- Connect diode test lamp to connector of tested fuel injector terminal 1 and Ground (GND).
- Operate starter and test voltage supply for fuel injector.

  LED must light up.
- Switch ignition off.

If LED does not light up:

- Check wire between 2-pin connector terminal 2 and the Fuel Pump (FP) Relay -J17- for open circuit according to wiring diagram.

  Wire resistance: max. 1.5 Ω

Checking activation

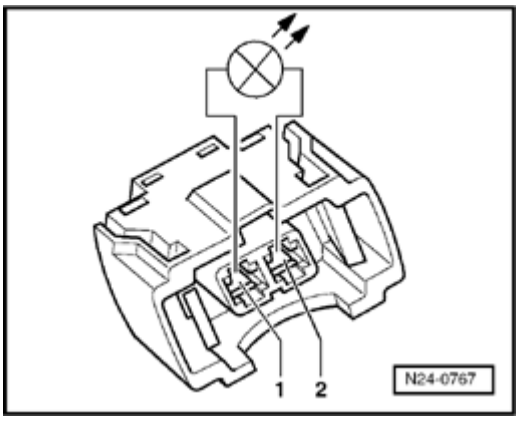

- Connect diode test lamp to the connector terminals of the fuel injector to be checked.
- Operate starter and test activation of fuel injector.

  LED should flicker.
- Switch ignition off.

If LED does not flicker:

- Connect test box to control module wiring harness ⇒ Page ST-10 , connect test box for wiring test.

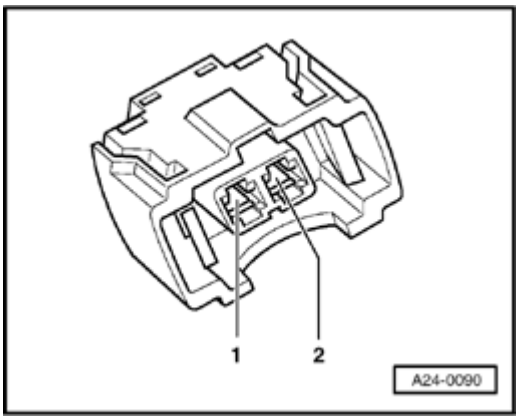

- Check wires between test box and 2-pin connector to Engine Control Module (ECM) for open circuit according to wiring diagram.

  Wire resistance: max. 1.5 Ω

Component	Connector	Test box
Cylinder 1 Fuel Injector - N30-	Terminal 2	Socket 24
Cylinder 2 Fuel Injector - N31-	Terminal 2	Socket 25
Cylinder 3 Fuel Injector - N32-	Terminal 2	Socket 26
Cylinder 4 Fuel Injector - N33-	Terminal 2	Socket 2
Cylinder 5 Fuel Injector - N83-	Terminal 2	Socket 3
Cylinder 6 Fuel Injector - N84-	Terminal 2	Socket 4

- Check wires for short circuit to B+ and to Ground (GND).

  Specified value: ∞ Ω

If there is no malfunction in wire connection:

- Replace Motronic Engine Control Module (ECM) - J220- ⇒ Page 24-101 .

24-71

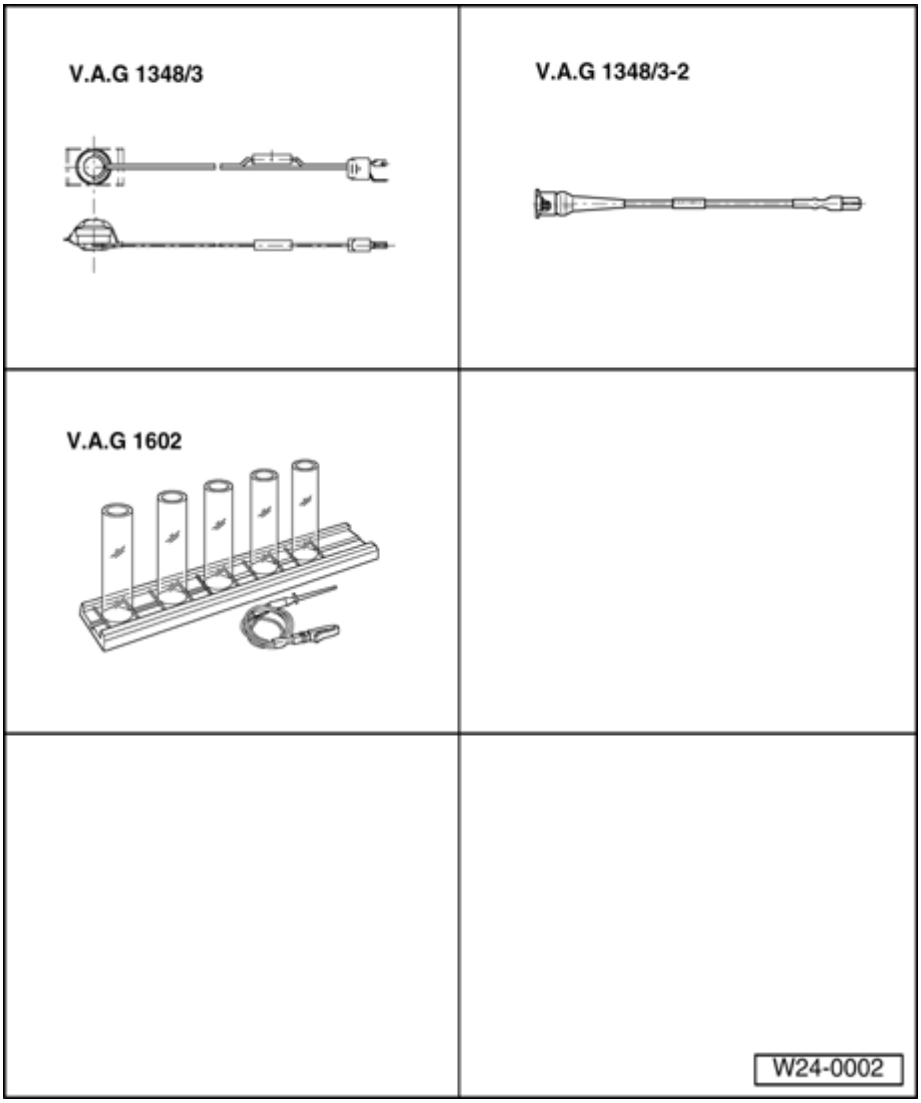

Injection quantity and proper seal of fuel injectors, checking

Recommended special tools and equipment

- V.A.G 1348/3A remote control with V.A.G 1348/3-2 adapter cable
- V.A.G 1602 tester for quantity of injected fuel

Without illustration:

- V.A.G 1594A connector test kit

Test requirement

- Fuel pressure must be OK, check ⇒ Page 24-78 , fuel pressure regulator and retaining pressure, checking.

Test sequence

- Remove spark plugs with ignition wires ⇒ Page 28-3 , Ignition components, removing and installing

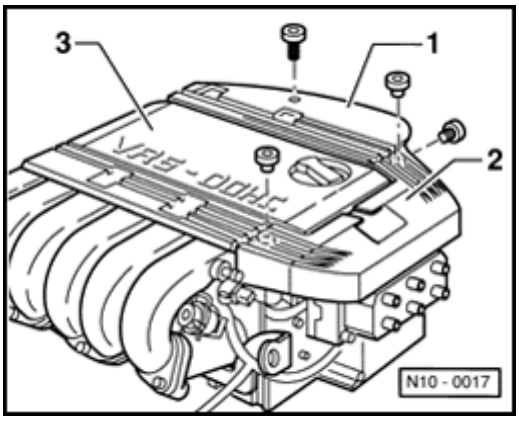

- Remove ignition wire guides -1- and -2-.
- Remove cover over upper section of intake manifold -3-.
- Remove intake manifold upper part ⇒ Page 24-12 , item 1 .

Note:

Seal the intake channels in lower part of intake manifold using a clean rag.

- Disconnect fuel injector connectors.
- Then remove fuel rail completely, fuel hoses remain connected ⇒ Page 24-13 , item 6 .
- Lift fuel distributor with fuel injectors off lower part of intake manifold and support it.

24-73

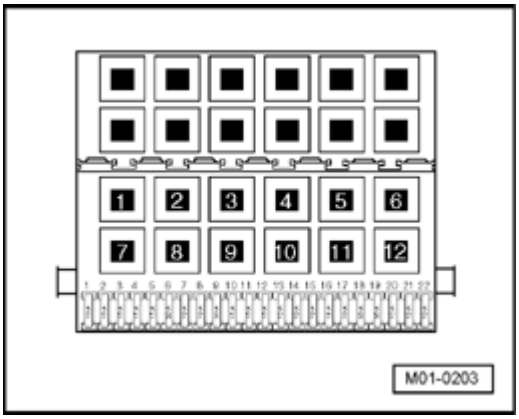

Checking proper seal

- Remove Fuel Pump (FP) Relay -J17- from relay carrier (relay position 12).

Note:

- *Remove battery Ground (GND) strap if tools are necessary for removal of relays or control modules from the relay carrier.*
- *Obtain radio code for radios with anti-theft coding before disconnecting battery.*
- *Do not use metallic tools to pry off relays from relay carrier. The terminals could conduct electricity.*

- Bridge terminals 4 + 6 on relay carrier using appropriate adapter cables.

  Fuel Pump (FP) must run.

- Check proper seal of fuel injectors (visual inspection). With Fuel Pump (FP) running, only 1 to 2 drops per minute should escape from each valve.
- Disconnect the connection between relay carrier terminals.
- Insert Fuel Pump (FP) Relay -J17- into relay carrier.

24-74

If fuel loss is greater:

- Replace malfunctioning fuel injector ⇒ Page 24-13 , item 12 .

Note the following when installing fuel injectors:

- ♦ Replace O-rings on all fuel injectors and wet them slightly with clean motor oil.
- ♦ Insert fuel injectors into fuel distributor perpendicular and in the right position, and secure them with retaining clips.
- ♦ Position fuel distributor on lower part of intake manifold using secured fuel injectors and apply uniform pressure to press it in.
- ♦ The connectors must audibly engage on valves when attached.

- Erase DTC memory of Engine Control Module (ECM) ⇒ Page ST-25 , Diagnostic mode 4: Reset/erase diagnostic data.

- Generate readiness code ⇒ Page ST-50 .

24-75

Checking injection quantity

- Insert a fuel injector to be tested into a measuring tube of V.A.G 1602 tester for fuel injection quantity.

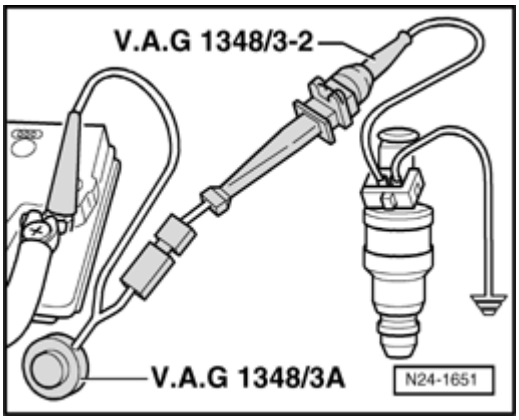

- Using respective adapter cables, connect one terminal of fuel injector to be checked to engine Ground (GND).
- Use adapter cable to connect second terminal of fuel injector to V.A.G 1348/3 remote control with V.A.G 1348/3-2 adapter cable.
- Connect alligator clip to B+.

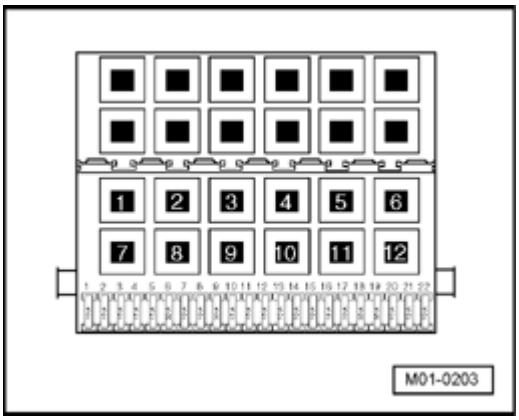

- Remove Fuel Pump (FP) Relay -J17- from relay carrier (relay position 12).

Note:

- *Remove battery Ground (GND) strap if tools are necessary for removal of relays or control modules from the relay carrier.*
- *Obtain radio code for radios with anti-theft coding before disconnecting battery.*
- *Do not use metallic tools to pry off relays from relay carrier. The terminals could conduct electricity.*

24-76

- Bridge terminals 4 + 6 on relay carrier using appropriate adapter cables.

  Fuel Pump (FP) must run.

- Operate remote control for 30 seconds.

- Repeat test on other fuel injectors. Use new graduated measuring glasses for this.

Note:

Check spray pattern when checking injection quantity. Spray pattern must be the same for all injectors

- After all fuel injectors have been activated, place graduated measuring glasses on a level surface and compare quantity of injected fuel. Specified value: 90 to 130 ml per injector

- Disconnect connection between relay carrier terminals.

- Insert Fuel Pump (FP) Relay -J17- into relay carrier.

If measured value of one or more fuel injectors is below or above the indicated specified value:

- Replace malfunctioning fuel injector ⇒ Page 24-13 , item 12 .

24-77

Note the following when installing fuel injectors:

- Replace O-rings on all fuel injectors and wet them slightly with clean motor oil.
- Insert fuel injectors into fuel distributor perpendicular and in the right position, and secure them with retaining clips.
- Position fuel distributor on lower part of intake manifold using secured fuel injectors and apply uniform pressure to press it in.
- The connectors must audibly engage on valves when attached.

- Erase DTC memory of Engine Control Module (ECM) ⇒ Page ST-25 , Diagnostic mode 4: Reset/erase diagnostic data.

- Generate readiness code ⇒ Page ST-50 .

24-78

Fuel pressure regulator and residual pressure, checking

Function

The fuel pressure regulator controls the fuel pressure as a function of the Manifold Absolute Pressure (MAP).

Recommended special tools and equipment

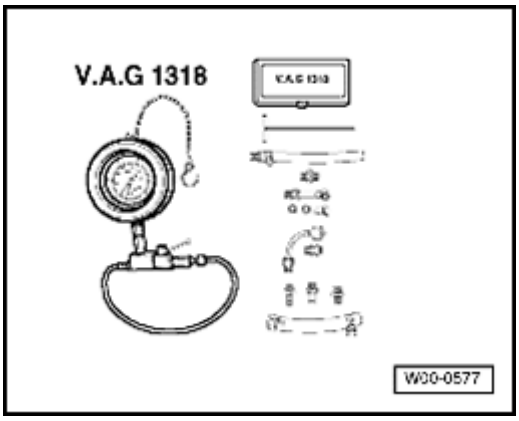

- V.A.G 1318 pressure gauge
- V.A.G 1318/1 hose adapter
- V.A.G1318/10 adapter

Test requirements

- Parking brake must be engaged or else daylight driving lights will be switched on.
- For vehicles with automatic transmission, selector lever must be in -P-.
- Delivery quantity and check-valve of Fuel Pump (FP) OK, check ⇒ Page 20-15 , Fuel Pump (FP), checking.
- Ignition switched off.

24-79

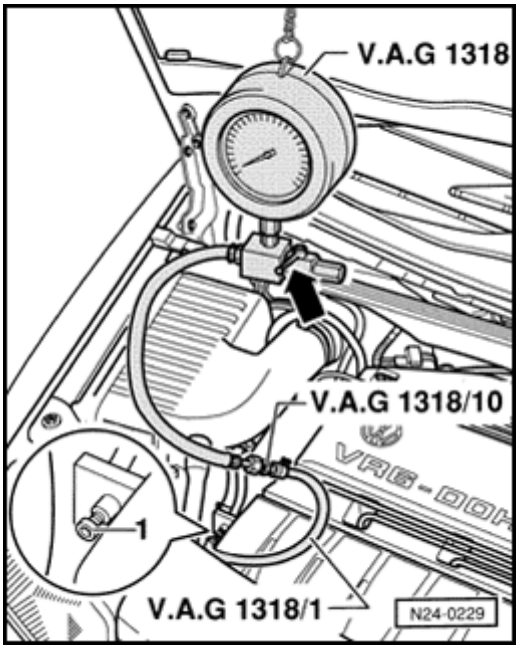

Work sequence

Observe safety precautions ⇒ Page 24-22 .

Observe rules for cleanliness ⇒ Page 24-25 .

- Remove screw plug -1- from test connection on fuel rail.

WARNING!

- ***The fuel or fuel lines in fuel system can become very hot (danger of scalding)!***
- ***In addition, the fuel system is under pressure! Before opening the system, place rags around the connection area and release pressure by carefully loosening the connection!***
- ***Wear protective goggles and protective gloves when working on the fuel system!***

- Connect pressure gauge (V.A.G 1318) to test connection using hose adapter ((V.A.G 1318/1) and adapter ((V.A.G 1318/10).
- Close shut-off valve of pressure gauge. The lever points perpendicular to direction of flow (arrow).

- Start engine and let run at idle.

- Measure fuel pressure.

  Specified value: approx. 2.5 bar positive pressure

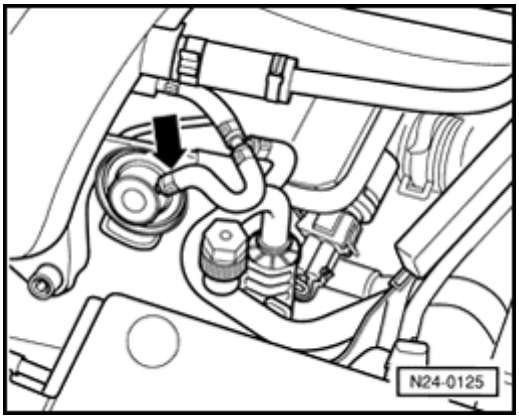

- Disconnect vacuum hose from fuel pressure regulator on upper section of intake manifold (arrow). Fuel pressure should rise to:

  approx. 3 bar positive pressure

- Switch ignition off.

Note:

If fuel should escape at the vacuum connection of the pressure regulator, replace fuel pressure regulator ⇒ Page 24-13 , item 14 .

- Now check for proper seal and residual pressure. Observe pressure drop on pressure gauge for this. After 10 minutes:

  at least 2.0 bar positive pressure should still be present.

If residual pressure falls below 2 bar positive pressure:

- Start engine and let run at idle.
- Wait until pressure has built-up, and then switch off ignition. Simultaneously clamp return line (with blue marking) on fuel rail completely closed.
- Observe pressure drop on pressure gauge.

If pressure does not drop:

- Replace fuel pressure regulator ⇒ Page 24-13 , item 14 .

- Erase DTC memory of Engine Control Module (ECM) ⇒ Page ST-25 , Diagnostic mode 4: Reset/erase diagnostic data.

- Generate readiness code ⇒ Page ST-50 .

If pressure does drop again:

- Test check-valve of Fuel Pump (FP) ⇒ Page 20-15 , Fuel Pump (FP), checking.

- Erase DTC memory of Engine Control Module (ECM) ⇒ Page ST-25 , Diagnostic mode 4: Reset/erase diagnostic data.

- Generate readiness code ⇒ Page ST-50 .

If pressure does drop again:

- Check whether line connections, O-rings in fuel distributor, and fuel injectors are properly sealed.

- Check pressure gauge for proper seal.

24-82

Note:

Before removing pressure gauge, put cleaning rags back around line connection which is to be disconnected.

- Erase DTC memory of Engine Control Module (ECM) ⇒ Page ST-25 , Diagnostic mode 4: Reset/erase diagnostic data.

- Generate readiness code ⇒ Page ST-50 .

24-83

Intake system for leaks (false air), checking

Checking with engine leak detection spray

Recommended special tools and equipment

- Engine leak detection spray G 001 800 A1

Requirements

- Parking brake must be engaged or else daylight driving lights will be switched on.
- For vehicles with automatic transmission, selector lever must be in -P-.
- Coolant temperature must be at least 80 ° C ⇒ Page ST-14 , Diagnostic mode 1: Check measured values; PID 5, Coolant temperature.

24-84

Work sequence

Note:

- *Vacuum in the intake system sucks in the leak detection spray with false air. Leak detection spray decreases ignition quality of the fuel mixture. This causes a drop in engine speed and changes the value produced by the Heated Oxygen Sensor (HO2S).*

- *It is absolutely necessary to follow the safety precautions listed on the can.*

- Connect diagnostic tester ⇒ Page ST-7 .

- Start engine and let run at idle.

- Under address word 33, select "Diagnostic mode 1: Checking measured values."

- Select the following measured values:

  - PID 06: Short time gasoline-air ratio bank 1,

  - PID 12: Engine rotations per minute.

- Observe short time gasoline-air ratio bank 1 as well as engine speed.

- Spray intake system parts with engine leak detection spray in a systematic manner.

24-85

If engine speed drops or if short-term gasoline-air ratio changes:

- End diagnosis and switch ignition off.
- Check sprayed part of intake system for leaks, and repair the malfunction.
- Erase DTC memory of Engine Control Module (ECM) ⇒ Page ST-25 , Diagnostic mode 4: Reset/erase diagnostic data.
- Generate readiness code ⇒ Page ST-50 .

Function tests

Oxygen sensor and oxygen sensor regulation before catalytic converter, checking

Recommended special tools and equipment

- V.A.G 1526 multimeter or V.A.G1715 multimeter
- V.A.G 1594 connector test kit
- Wiring diagram

Requirements

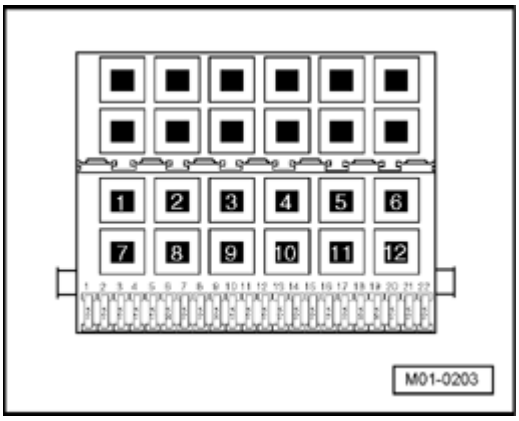

- The respective fuses of Heated Oxygen Sensor (HO2S) -G39- must be OK:

⇒ *Electrical Wiring Diagrams, Troubleshooting & Component Locations*

- Battery voltage must be at least 11.5 Volts.
- Ground (GND) connections between engine and chassis must be OK.
- All electrical consumers such as, lights and rear window defroster must be switched off.

- Parking brake must be engaged or else daylight driving lights will be switched on.
- For vehicles with automatic transmission, selector lever must be in -P-.
- If vehicle is equipped with an A/C system, it must be switched off.
- Exhaust system must be properly sealed between catalytic converter and cylinder head.
- Coolant temperature must be at least 80 ° C ⇒ Page ST-14 , Diagnostic mode 1: Check measured values; PID 5, Coolant temperature.
- Oxygen sensor heater for oxygen sensor before catalytic converter must be OK, check ⇒ Page 24-27 .

Work sequence

- Select the lambda test results and check whether the specified values are being reached ⇒ Page ST-27 , Diagnostic mode 5: Check lambda test results.

If specified values are obtained:

- End diagnosis and switch ignition off.

24-88

If specified values are not obtained:

- End diagnosis and let engine continue to run at idle.

- Check primary voltage ⇒ Page 24-88 .

Checking primary voltage

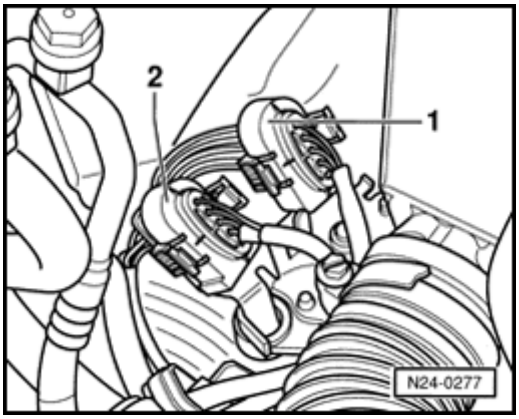

- Disconnect 4-pin harness connector (black) to Heated Oxygen Sensor (HO2S) -G39- (item no. 1).

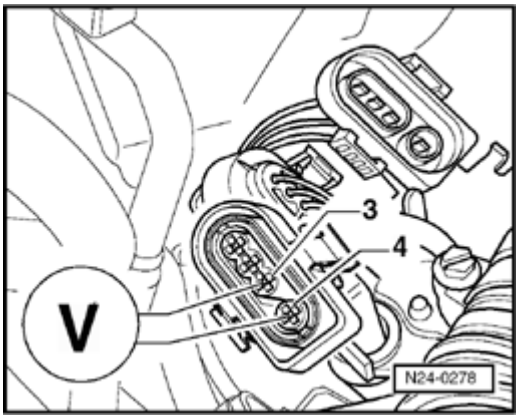

- Connect multimeter for voltage measurement to terminals 3 + 4 of connector to Engine Control Module (ECM) and measure primary voltage.

  Specified value: 0.400 to 0.500 Volts

- Switch ignition off.

24-89

If specified value is not obtained:

- Test oxygen sensor wires ⇒ Page 24-89 .

If specified value is obtained:

- Replace Heated Oxygen Sensor (HO2S) 1 Bank 1 -G39- before catalytic converter ⇒ Page 24-9 , item 6 .

- Erase DTC memory of Engine Control Module (ECM) ⇒ Page ST-25 , Diagnostic mode 4: Reset/erase diagnostic data.

- Generate readiness code ⇒ Page ST-50 .

Checking oxygen sensor wires

- Connect test box to control module wiring harness ⇒ Page ST-10 , connect test box for wiring test.

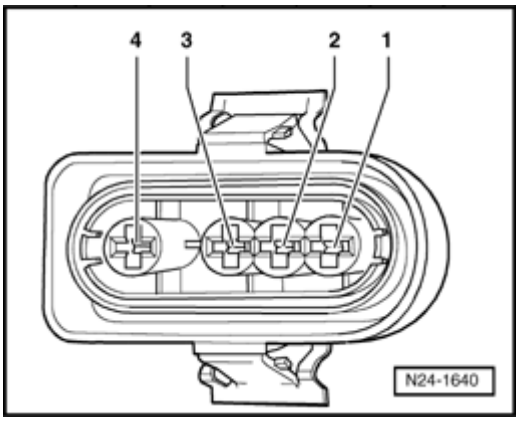

- Check wires between test box and 4-pin connector to Engine Control Module (ECM) for open circuit according to wiring diagram.

  Terminal 3 + socket 42

  Terminal 4 + socket 20

  Wire resistance: max. 1.5 Ω

24-90

- Check wires for short circuit to B+ and to Ground (GND).

  Specified value: ∞ Ω

If no malfunctions are found in wires:

- Replace Heated Oxygen Sensor (HO2S) 1 Bank 1 -G39- before catalytic converter ⇒ Page 24-9 , item 6 .

- Erase DTC memory of Engine Control Module (ECM) ⇒ Page ST-25 , Diagnostic mode 4: Reset/erase diagnostic data.

- Generate readiness code ⇒ Page ST-50 .

24-91

Oxygen sensor and oxygen sensor regulation behind catalytic converter, checking

Recommended special tools and equipment

- V.A.G 1526 multimeter or V.A.G 1715 multimeter
- V.A.G 1594 connector test kit
- Wiring diagram

24-92

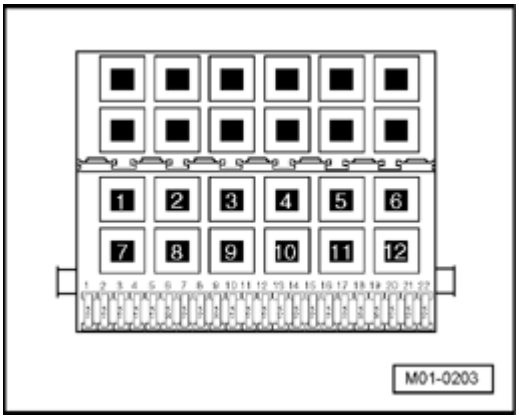

Requirements

- The respective fuses of Heated Oxygen Sensor (HO2S) -G108- must be OK:

⇒ *Electrical Wiring Diagrams, Troubleshooting & Component Locations*

- Battery voltage must be at least 11.5 Volts.
- Ground (GND) connections between engine and chassis must be OK.
- All electrical consumers such as, lights and rear window defroster must be switched off.
- Parking brake must be engaged or else daylight driving lights will be switched on.
- For vehicles with automatic transmission, selector lever must be in -P-.
- If vehicle is equipped with an A/C system, it must be switched off.
- Exhaust system must be properly sealed between catalytic converter and cylinder head.
- Coolant temperature must be at least 80 ° C ⇒ Page ST-14 , Diagnostic mode 1: Check measured values; PID 5, Coolant temperature.
- Oxygen sensor heater for oxygen sensor behind catalytic converter must be OK, check ⇒ Page 24-30 .

Work sequence

- Select the lambda test results and check whether the specified values are being reached ⇒ Page ST-27 , Diagnostic mode 5: Check lambda test results.

If specified values are obtained:

- End diagnosis and switch ignition off.

If specified values are not obtained:

- End diagnosis and let engine continue to run at idle.

- Check primary voltage ⇒ Page 24-93 .

Checking primary voltage

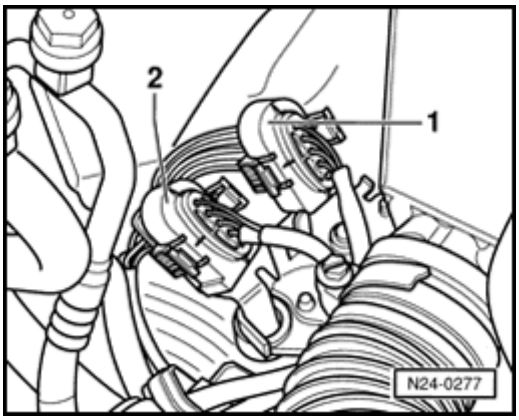

- Disconnect 4-pin harness connector (brown) to Heated Oxygen Sensor (HO2S) 2 -G108- (-2-).

24-94

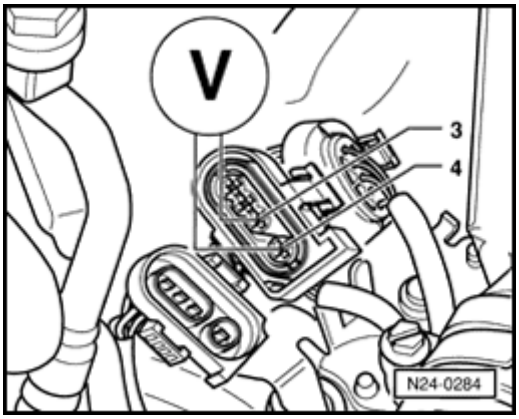

- Connect multimeter for voltage measurement to terminals 3 + 4 of connector to Engine Control Module (ECM) and measure primary voltage.

  Specified value: 0.400 to 0.500 Volts

- Switch ignition off.

If specified value is not obtained:

- Test oxygen sensor wires ⇒ Page 24-94 .

If specified value is obtained:

- Replace Oxygen Sensor (O2S) 2 Bank 1 Behind Three Way Catalytic Converter (TWC) -G108- ⇒ Page 24-8 , item 5 .
- Erase DTC memory of Engine Control Module (ECM) ⇒ Page ST-25 , Diagnostic mode 4: Reset/erase diagnostic data.
- Generate readiness code ⇒ Page ST-50 .

Checking oxygen sensor wires

- Connect test box to control module wiring harness ⇒ Page ST-10 , connect test box for wiring test.

24-95

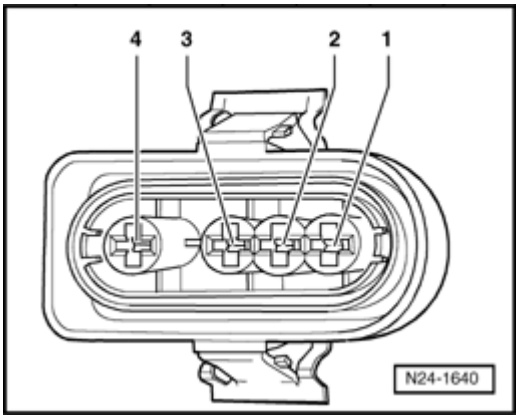

- Check wires between test box and 4-pin connector to Engine Control Module (ECM) for open circuit according to wiring diagram.

  Terminal 3 + socket 58

  Terminal 4 + socket 13

  Wire resistance: max. 1.5 Ω

- Check wires for short circuit to B+ and to Ground (GND).

  Specified value: ∞ Ω

If no malfunctions are found in wires:

- Replace Oxygen Sensor (O2S) 2 Bank 1 Behind Three Way Catalytic Converter (TWC) -G108- ⇒ Page 24-8 , item 5 .
- Erase DTC memory of Engine Control Module (ECM) ⇒ Page ST-25 , Diagnostic mode 4: Reset/erase diagnostic data.
- Generate readiness code ⇒ Page ST-50 .

24-96

Engine Control Module (ECM)

Function

The Engine Control Module (ECM) controls fuel injection, the throttle valve control module, oxygen sensor control, ignition, knock control, EVAP canister purge regulator valve 1, engine speed limitation via fuel injectors and fuel pump relay, and On Board Diagnostic (OBD).

24-97

Voltage supply for Engine Control Module (ECM), checking

Recommended special tools and equipment

- V.A.G 1526 multimeter or V.A.G1715 multimeter
- V.A.G 1594 connector test kit
- Wiring diagram

Test requirements

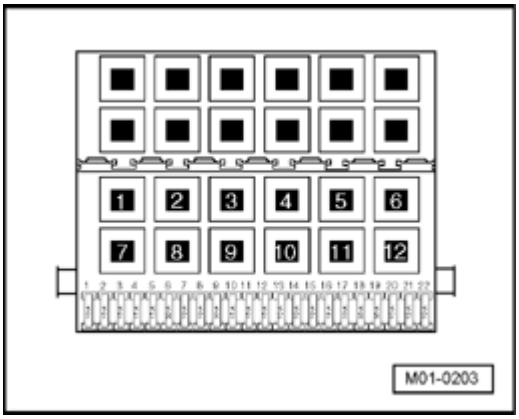

- The respective fuses of Motronic Engine Control Module (ECM) -J220- must be OK:

⇒ *Electrical Wiring Diagrams, Troubleshooting & Component Locations*

24-98

- Fuel Pump (FP) Relay -J17- must be OK, check:

⇒ *Electrical Wiring Diagrams, Troubleshooting & Component Locations*

- Generator (GEN) must be OK, checking:

⇒ *Electrical Wiring Diagrams, Troubleshooting & Component Locations*

- Battery voltage must be at least 11.5 Volts.
- All electrical consumers such as, lights and rear window defroster must be switched off.
- Parking brake must be engaged or else daylight driving lights will be switched on.
- For vehicles with automatic transmission, selector lever must be in -P-.
- If vehicle is equipped with an A/C system, it must be switched off.
- Ground (GND) connections between engine, transmission, and chassis must be OK.

24-99

Test sequence

- Connect test box to control module wiring harness ⇒ Page ST-10 , connect test box for wiring test.

Checking voltage supply at terminal 30

- Measure voltage supply between sockets 1 + 54 of test box.

  Specified value: at least 11.5 V

If specified value is not obtained:

- Check wire connections to relay carrier and Ground (GND) connection of Engine Control Module (ECM) according to wiring diagram:

⇒ *Electrical Wiring Diagrams, Troubleshooting & Component Locations*

- Erase DTC memory of Engine Control Module (ECM) ⇒ Page ST-25 , Diagnostic mode 4: Reset/erase diagnostic data.

- Generate readiness code ⇒ Page ST-50 .

24-100

Checking voltage supply at terminal 15

- Measure voltage supply between sockets 1 +23 of test box.

- Switch ignition on.

  Specified value: at least 11.5 V

- Switch ignition off.

If specified value is not obtained:

- Check wire connections to relay carrier and Ground (GND) connection of Engine Control Module (ECM) according to wiring diagram:

⇒ *Electrical Wiring Diagrams, Troubleshooting & Component Locations*

- Erase DTC memory of Engine Control Module (ECM) ⇒ Page ST-25 , Diagnostic mode 4: Reset/erase diagnostic data.

- Generate readiness code ⇒ Page ST-50 .

24-101

Engine Control Module (ECM), replacing

Requirement

- Ignition switched off.

Removing

- Disengage and disconnect connector from Engine Control Module (ECM).

- Remove control module.

Installing

- Insert new control module into mounting plate.

- Install connector from control module and engage.

Note:

The great availability of equipment options makes it necessary to adapt the Engine Control Module (ECM) to the vehicle (e.g. throttle valve control module or cruise control system). This writing function is not possible with the generic scan tool.

- Functions and components, adapting:

⇒ *Repair Manual, 2.8 Liter VR6 2V Fuel Injection & Ignition, Engine Code(s): AAA m.y. 1996-1997, Repair Group 24*

- Generate readiness code ⇒ Page ST-50 .

Additional signals, checking

Speed signal, checking

Recommended special tools and equipment

- V.A.G 1526 multimeter or V.A.G 1715 multimeter
- V.A.G 1594 connector test kit
- Wiring diagram

Requirements

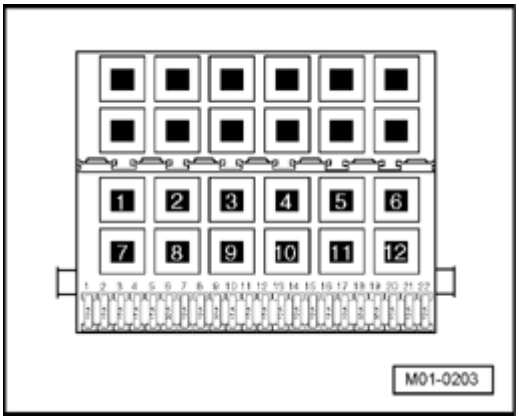

- The respective fuses of Motronic Engine Control Module (ECM) -J220- must be OK:

⇒ *Electrical Wiring Diagrams, Troubleshooting & Component Locations*

- Battery voltage must be at least 11.5 Volts.
- Speedometer -G21- must be OK.

24-103

Test sequence

Note:

To test speed signal, vehicle must be driven. Doing this requires a second person.

CAUTION!

Secure diagnostic tester on the rear seat and have it operated from there by second technician.

- Connect diagnostic tester ⇒ Page ST-7 .
- Start engine and let run at idle.
- Under address word 33, select "Diagnostic mode 1: Checking measured values."
- Select the measuring value "PID 13: Vehicle speed".
- Perform a road test, and have the 2nd person observe the indication on the display.

24-104

- Check specified value of vehicle speed:

PID	Diagnostic text	Specified value:
13:	Vehicle speed	approx. vehicle speed

- End road test and switch ignition off.

If no speed is indicated:

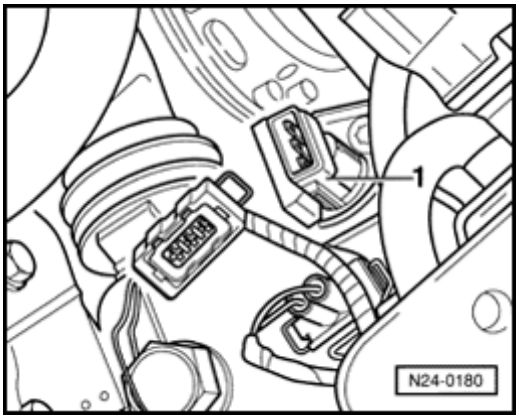

- Disconnect 3-pin connector from Speedometer Vehicle Speed Sensor (VSS) -G22- (-1-).

24-105

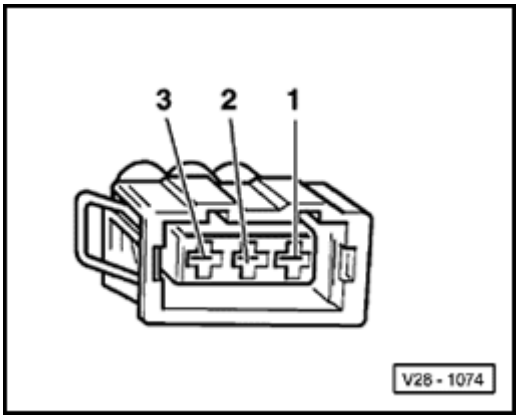

- Connect multimeter to terminals 1 +3 of connector for voltage measurement.
- Switch ignition on.

  Specified value: at least 9.0 V
- Switch ignition off.

If specified value is not obtained:

- Check wire connections according to wiring diagram:

⇒ *Electrical Wiring Diagrams, Troubleshooting & Component Locations*

If specified value is obtained:

- Connect test box to control module wiring harness ⇒ Page ST-10 , connect test box for wiring test.
- To measure voltage, connect multimeter between sockets 56 (Ground -GND-) +65 (speed signal) of test box.
- Jack up left front wheel.
- Switch ignition on.

24-106

- Rotate front wheel, and observe voltage indicated while doing so.

  Specified value: 0.0 to at least 4.0 V, fluctuating

Note:

The right front wheel must not turn during this, hold it steady if necessary.

If indicated voltage does not oscillate:

- Remove instrument cluster:

⇒ *Repair Manual, Electrical Equipment, Repair Group 90, Instrument cluster, removing and installing*

- Check wire connection from Engine Control Module (ECM) to Speedometer -G21- or to Speedometer Vehicle Speed Sensor (VSS) -G22- according to wiring diagram:

⇒ *Electrical Wiring Diagrams, Troubleshooting & Component Locations*

- Erase DTC memory of Engine Control Module (ECM) ⇒ Page ST-25 , Diagnostic mode 4: Reset/erase diagnostic data.

- Generate readiness code ⇒ Page ST-50 .

24-107

If no malfunctions are found in the wires and there was voltage between terminals 1 + 3:

- Replace Speedometer Vehicle Speed Sensor (VSS) -G22-.

- Erase DTC memory of Engine Control Module (ECM) ⇒ Page ST-25 , Diagnostic mode 4: Reset/erase diagnostic data.

- Generate readiness code ⇒ Page ST-50 .

Exhaust system components, removing and installing

Note:

- *After exhaust system repairs, make sure exhaust system is not under stress and that it has sufficient clearance from the bodywork. If necessary, loosen double clamps and clamp and align exhaust pipe so that sufficient clearance is maintained to the bodywork and support rings carry uniform loads.*

- *Do not use any silicone sealant. Traces of silicone components which are sucked into the engine are not burned there, and they damage the oxygen sensors.*

- *Always replace self-locking nuts.*

Exhaust manifold, front exhaust pipe and catalytic converter with attachments ⇒ Page 26-3 .

Mufflers with mounts ⇒ Page 26-6 .

Check catalytic converter ⇒ Page 26-10 .

26-2

Recommended special tools and equipment

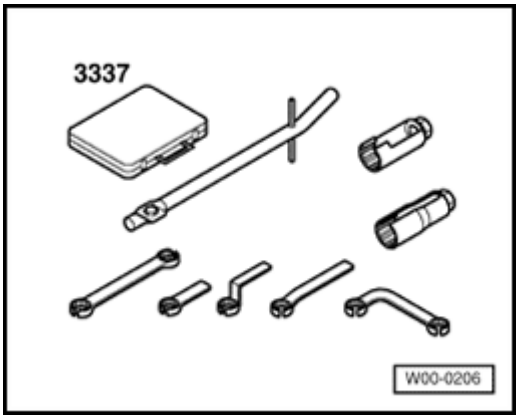

- 3337 ring spanner set

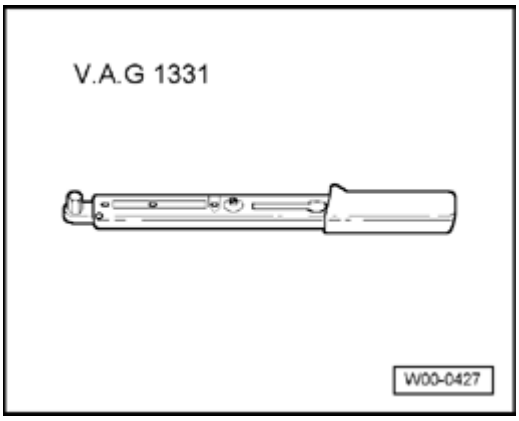

- V.A.G 1331 torque wrench (5 to 50 Nm)

26-3

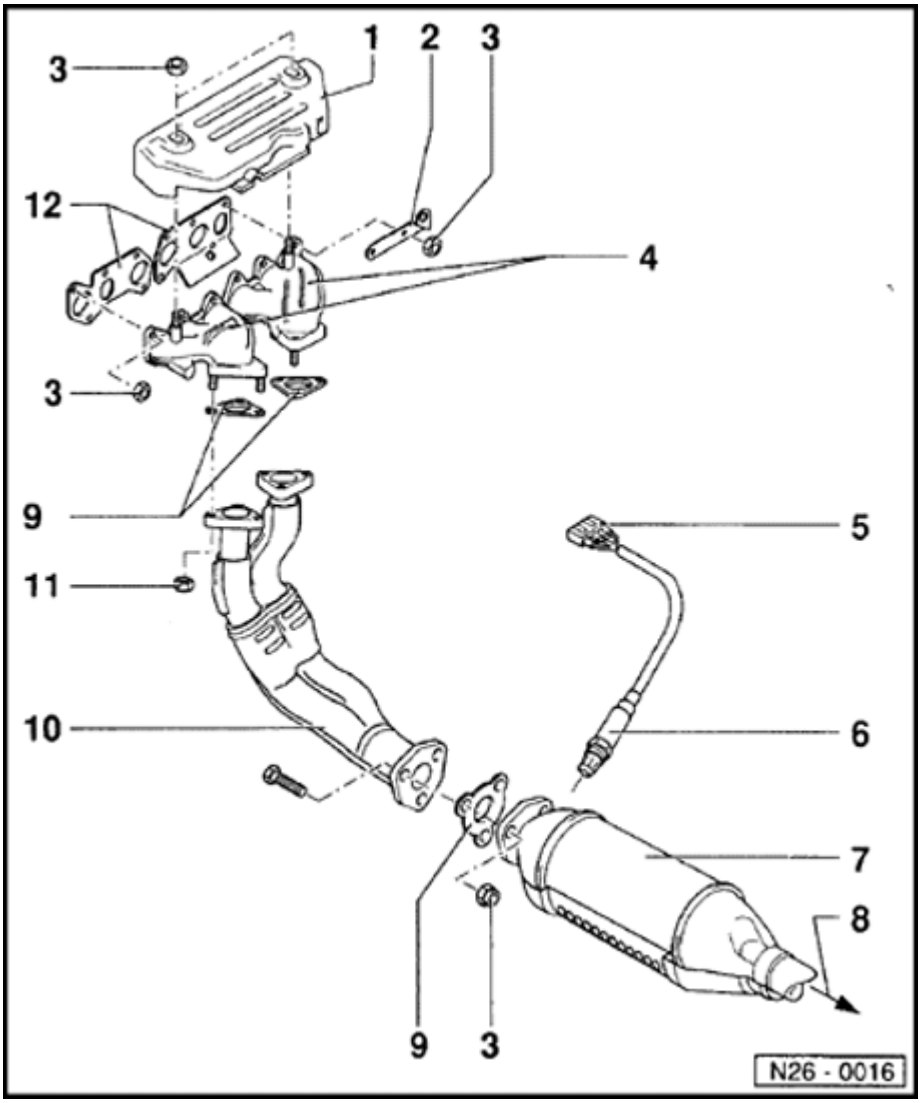

Exhaust manifold, front exhaust pipe and catalytic converter with attachments

Note:

- *Heated Oxygen Sensor (HO2S) 2 -G108-* bank 1 is not depicted in the illustration.*
- *Components marked with * are tested via On Board Diagnostic (OBD) ⇒ Page ST-21 , Diagnostic mode 3: Check DTC memory.*

1 - Heat shield

2 - Lifting eye

3 - 25 Nm

4 - Exhaust manifold

- 2-piece

26-4

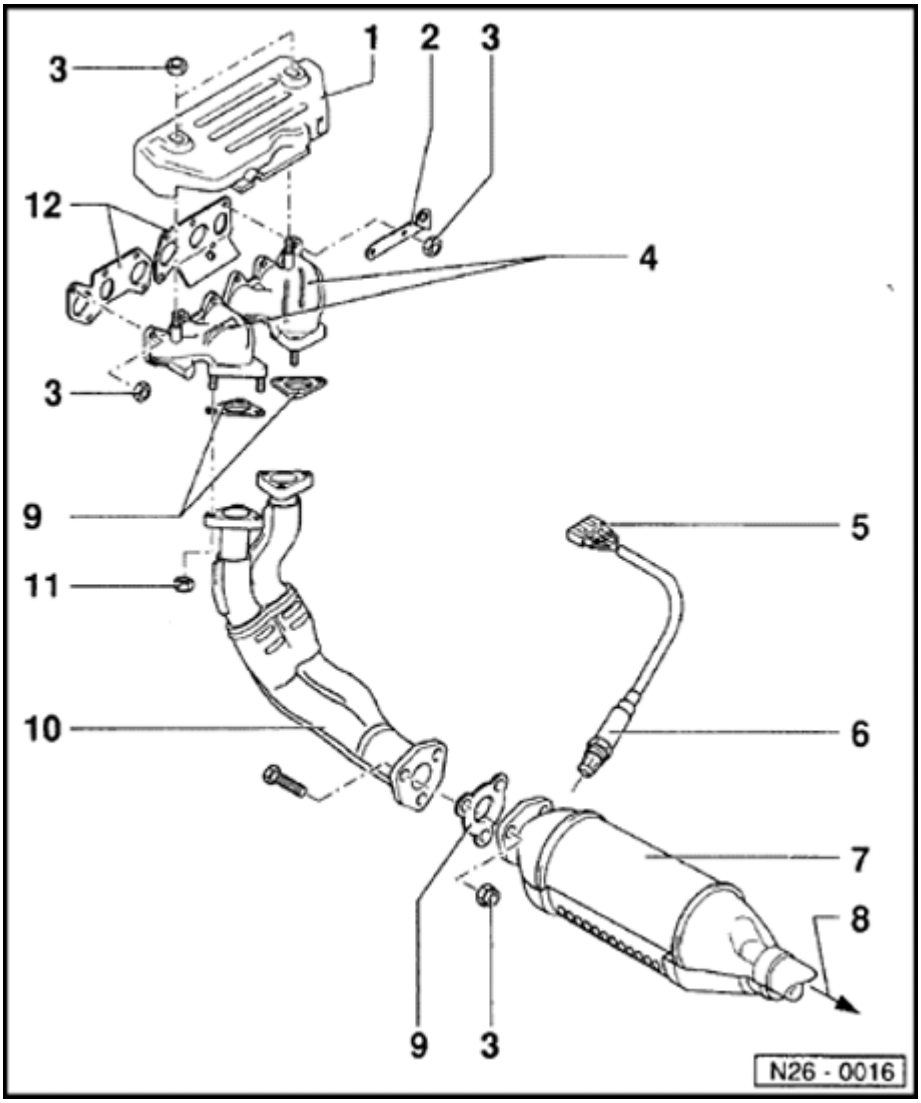

5 - 4-pin harness connector

- Black
- For Heated Oxygen Sensor (HO2S) -G39- and oxygen sensor heater

6 - Heated Oxygen Sensor (HO2S) 1 -G39-*, 50 Nm

- Component location: in front catalytic converter
- Only grease threads with G 052 112 A3 locking compound, do NOT allow locking compound to get into slots on sensor body
- Voltage supply of oxygen sensor heater via Fuel Pump (FP) Relay -J17-
- Check oxygen sensor heater for Oxygen Sensor (O2S) before Three Way Catalytic Converter (TWC) ⇒ Page 24-27
- Check Oxygen Sensor (O2S) and oxygen sensor control before Three Way Catalytic Converter (TWC) ⇒ Page 24-86

26-5

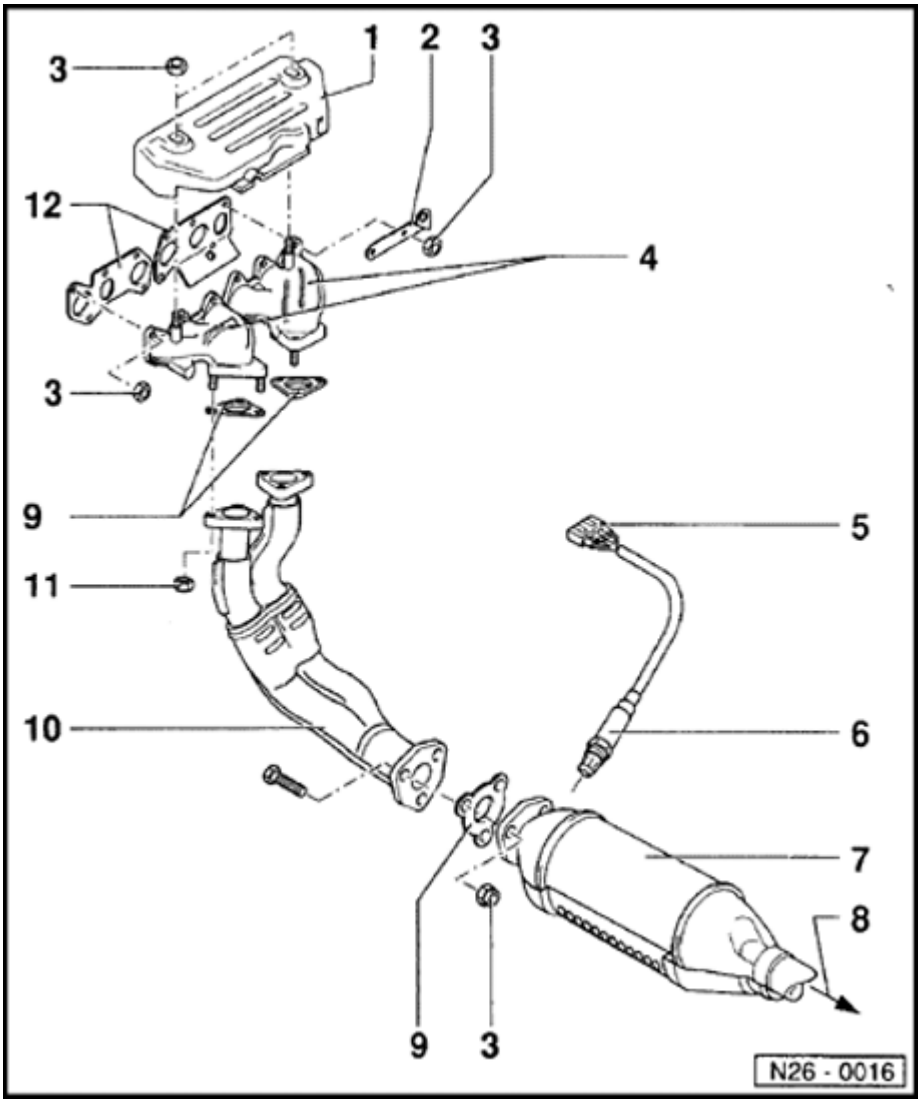

7 - Catalytic converter

8 - To front muffler

- ⇒ Page 26-9 , item 19

9 - Gasket

- Always replace

10 - Front exhaust pipe

11 - 40 Nm

12 - Gasket

- 2-piece
- Always replace

26-6

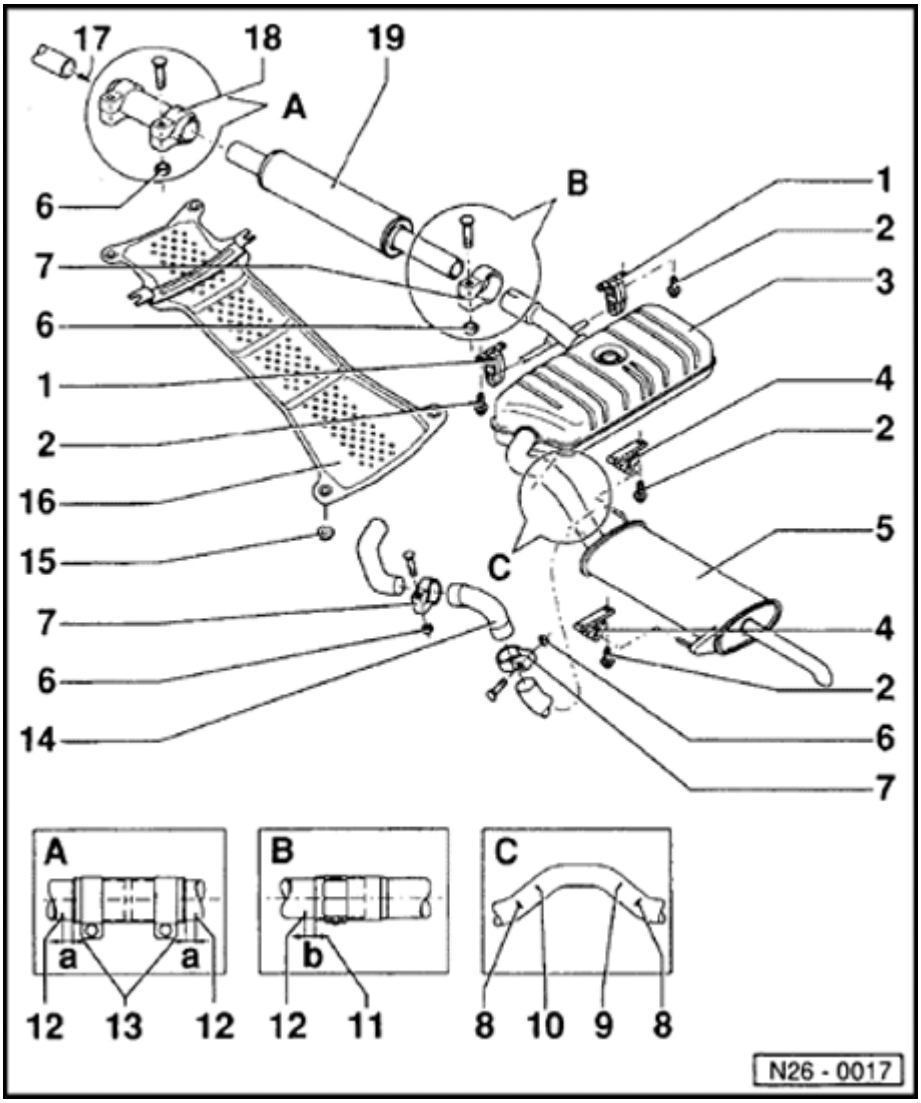

Mufflers with mounts

Note:

Align exhaust system lengthwise so that dimensions -a- and -b- are maintained.

1 - Support ring

- Note installed position

2 - 25 Nm

3 - Center muffler

4 - Support ring

5 - Rear muffler

6 - 40 Nm

7 - Clamp

26-7

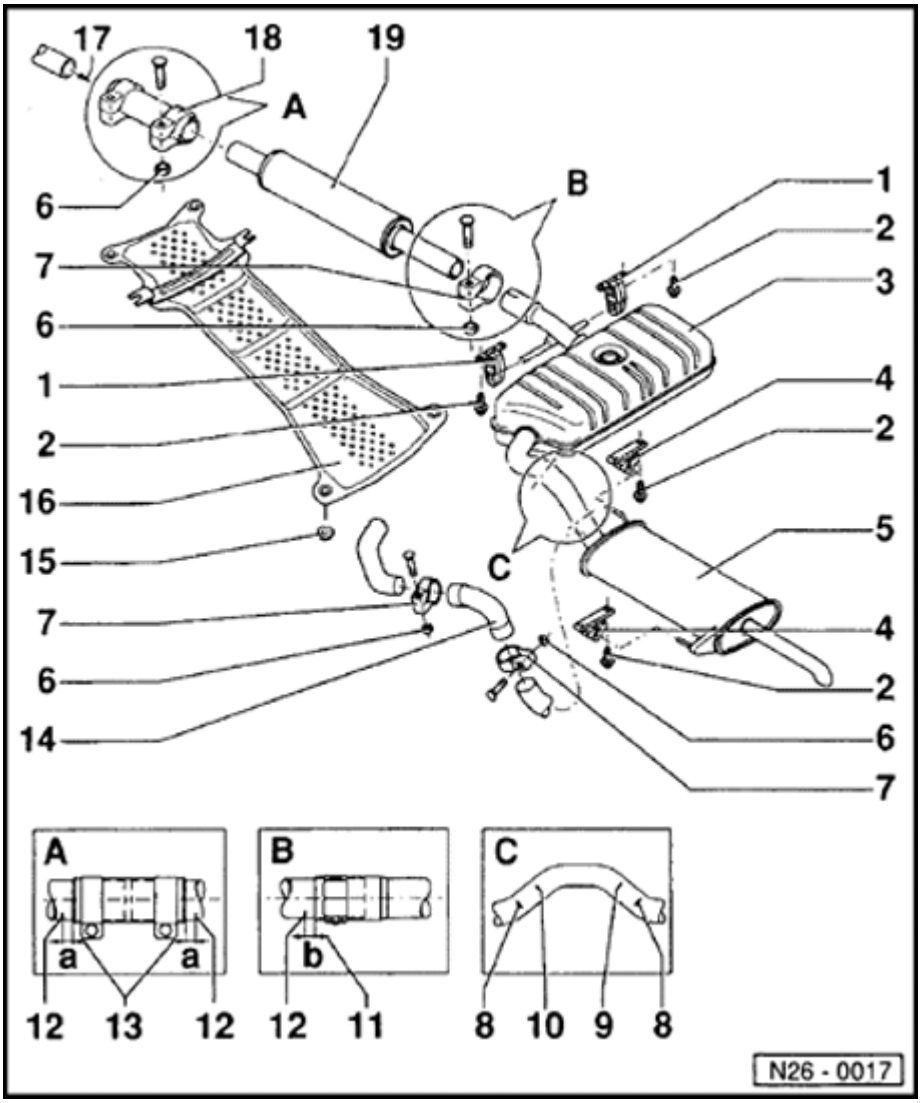

8 - Marking

- For clamp
- Three times on length
- Distance of clamp/marking ⇒ item 11

9 - Separating point

- For repairs
- When replacing center muffler, item 3
- Marked by three depressions around the circumference of the connecting pipe
- At factory, center and rear mufflers are installed as a single component. Replacement center and rear mufflers are supplied separately, with replacement connecting pipe and two clamps for connecting joint.
- Using V.A.G 1523 body repair saw, cut at right angle through connecting pipe at separation point.

26-8

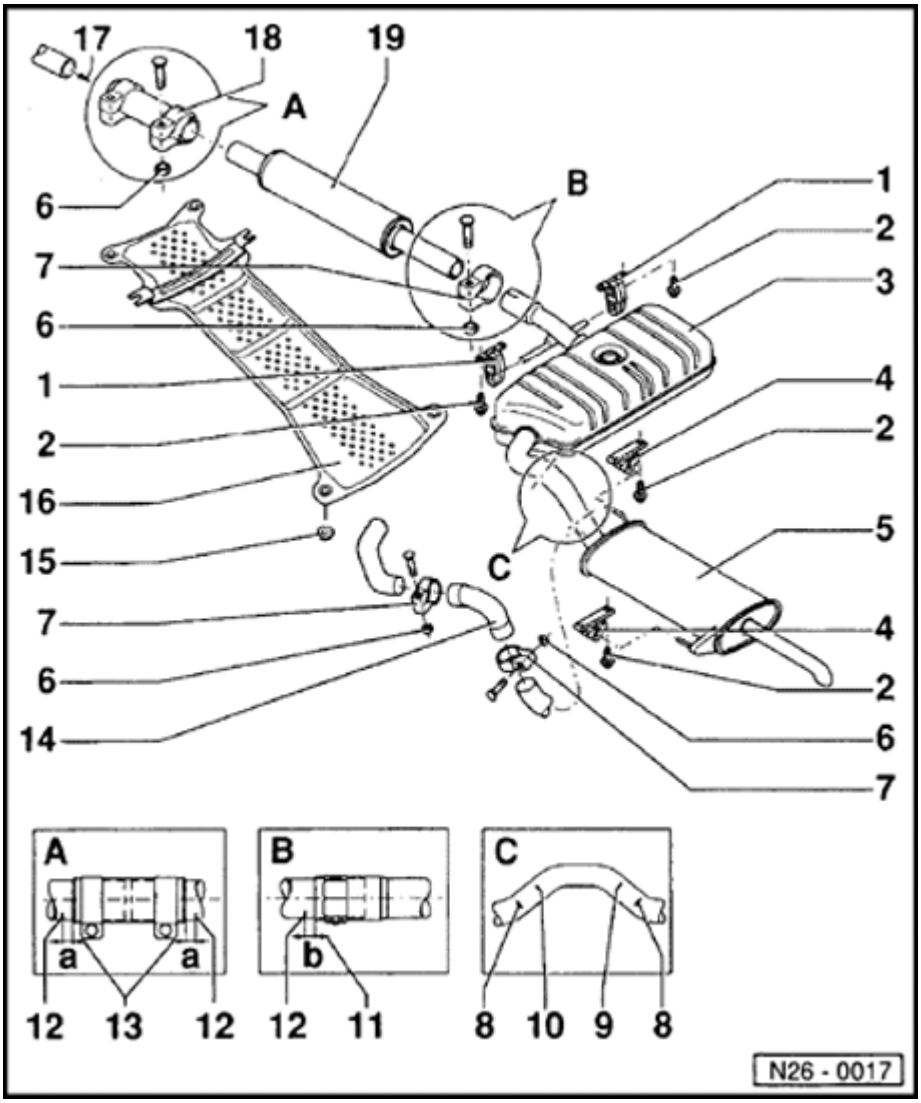

10 - Separating point

- For repairs
- When replacing rear muffler, item 5
- Marked by three depressions around the circumference of the connecting pipe
- At factory, center and rear mufflers are installed as a single component. Replacement center and rear mufflers are supplied separately, with replacement connecting pipe and two clamps for connecting joint.
- Using V.A.G 1523 body repair saw, cut at right angle through connecting pipe at separation point.

11 - Dimension -b- approx. 5 mm

12 - Marking

- Three times on length

26-9

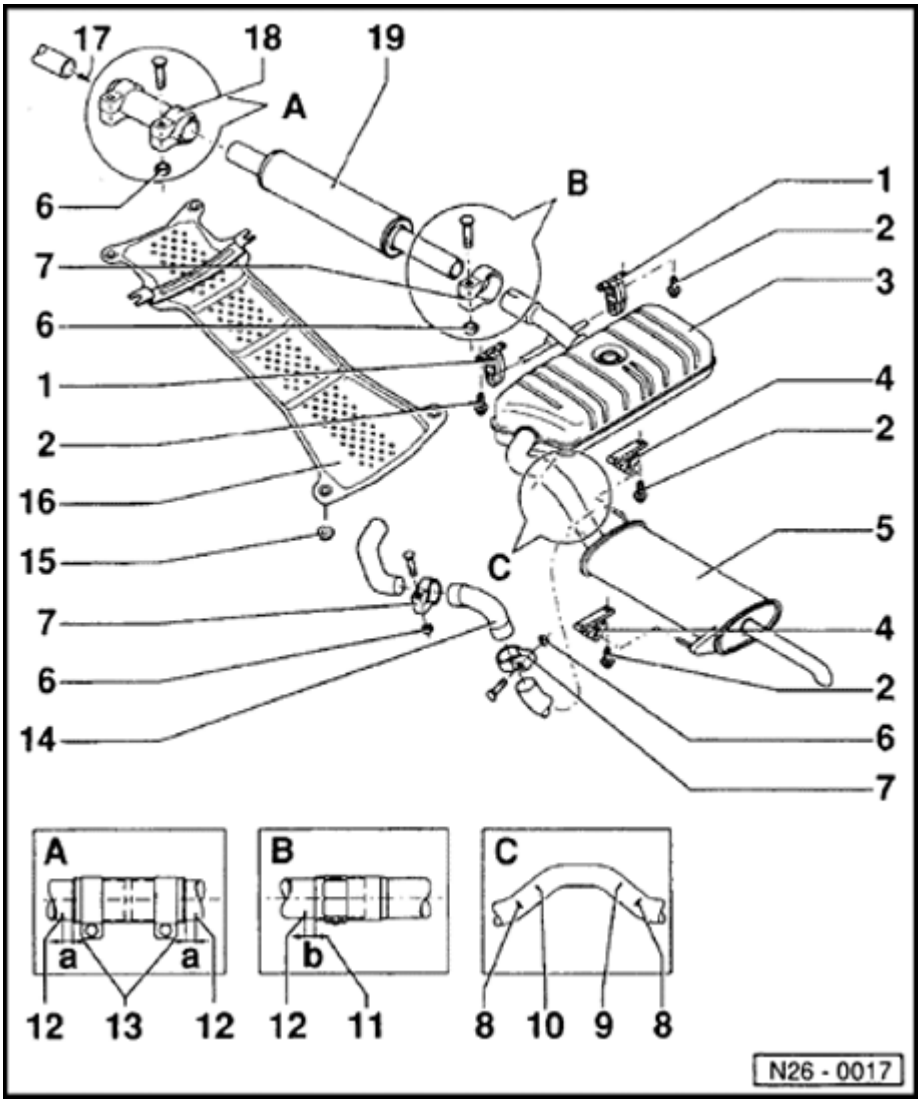

13 - Dimension = approx. 5 mm

14 - Connecting pipe for repairs

15 - Metal nut

- Must be threaded on

16 - Heat shield

17 - From Three Way Catalytic Converter (TWC)

- ⇒ Page 26-5 , item 7

18 - Double clamp

19 - Front muffler

Three Way Catalytic Converter (TWC), checking

Function test

- Select the measuring value "Test-ID 01: Catalytic converter" and check whether the specified values are being reached ⇒ Page ST-33 , Diagnostic mode 6: Check test results of components that are not continuously monitored

- End diagnosis and switch ignition off.

If the specified values are exceeded:

- Replace catalytic converter ⇒ Page 26-5 , item 7 .

- Erase DTC memory of Engine Control Module (ECM) ⇒ Page ST-25 , Diagnostic mode 4: Reset/erase diagnostic data.

- Generate readiness code ⇒ Page ST-50 .

Secondary Air Injection (AIR) system

CAUTION!

Observe the following for all installations, especially in engine compartment due to lack of room:

- ***Route lines of all types (e.g. for fuel, hydraulic, EVAP canister system, coolant and refrigerant, brake fluid, vacuum) and electrical wiring so that the original path is followed.***
- ***Watch for sufficient clearance to all moving or hot components.***
- ***Shift selector lever into position -P- and engage parking brake before working with the engine running.***

Function

Air is blown behind the exhaust valves by the Secondary Air Injection (AIR) system during a cold start. Thereby, the emission gas is enriched with oxygen, initiating a secondary combustion and thereby shortening the warm-up phase of the catalytic converter. Activation occurs from Motronic Engine Control Module (ECM) -J220- via Secondary Air Injection (AIR) Pump Relay -J299- to Secondary Air Injection (AIR) Solenoid Valve -N112- to the combination valve.

26-12

Note:

- *Always replace seals and gaskets.*
- *Vacuum lines and hose connections must not have leaks.*
- *Vacuum hoses must not be clogged or kinked.*
- *For the electric components to work properly, a voltage of at least 11.5 V is required.*
- *Engine Control Module (ECM) is equipped with On Board Diagnostic (OBD).*
- *Components marked with * are tested via On Board Diagnostic (OBD) ⇒ Page ST-21 , Diagnostic mode 3: Check DTC memory.*
- *It is possible that the control module will recognize a malfunction and store a DTC during some tests. Therefore the following work steps must be performed in the mentioned sequence after ending all tests and repairs.*

  - - Check DTC memory ⇒ Page ST-21 , Diagnostic mode 3: Check DTC Memory,

  - - Erase DTC memory ⇒ Page ST-25 , Diagnostic mode 4: Reset/erase diagnostic data

  - - For completion, generate readiness code ⇒ Page ST-50 .

Removing and installing Secondary Air Injection (AIR) system components ⇒ Page 26-13 .

Check secondary air system for proper seal ⇒ Page 26-17 .

26-13

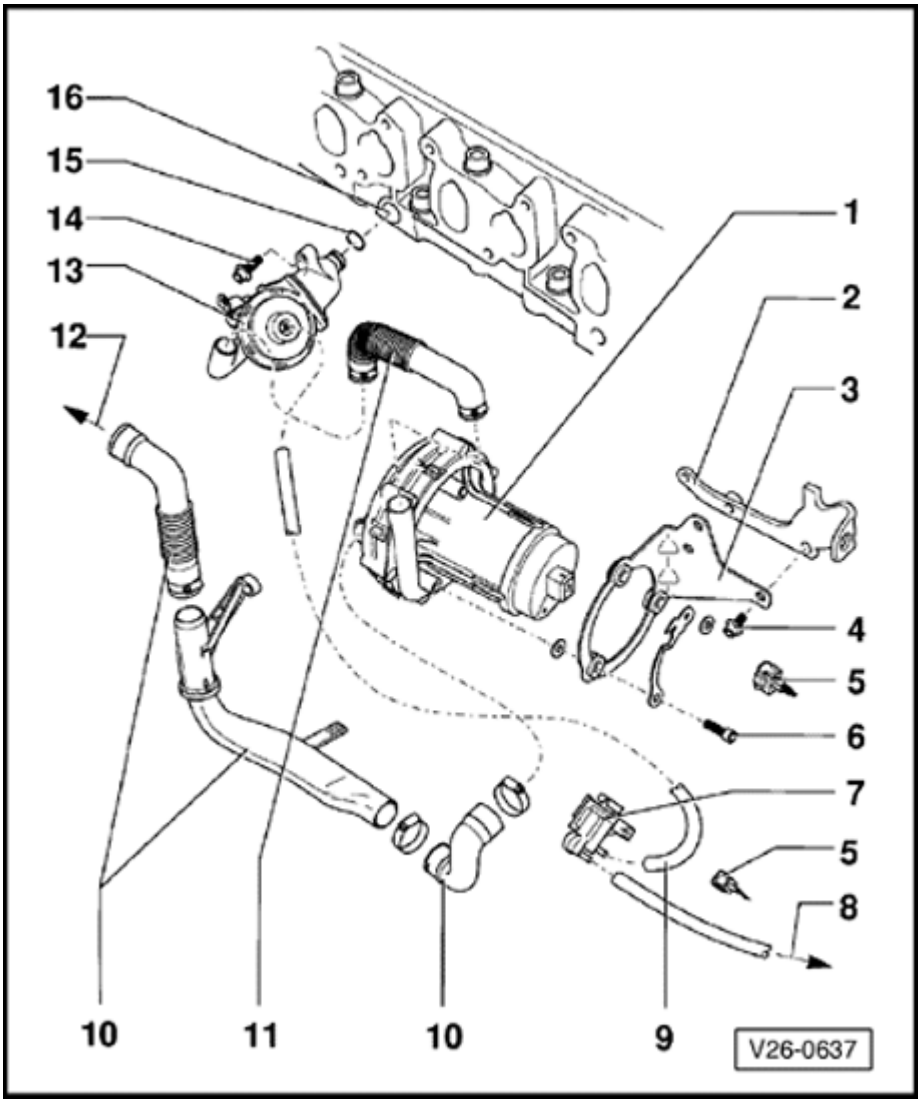

Secondary Air Injection (AIR) system components, removing and installing

Note:

Component location of Secondary Air Injection (AIR) Pump Relay -J299- ⇒ Fig. 1 .*

1 - Secondary Air Injection (AIR) pump motor - V101-*

- Checking ⇒ Page 26-22

2 - Lifting eye

- On cylinder head at left

3 - Bracket

- For Secondary Air Injection (AIR) Pump Motor (item 1) and Secondary Air Injection (AIR) Solenoid Valve (item 7)

4 - 25 Nm

5 - Connector

- 2-pin

6 - 10 Nm

26-14

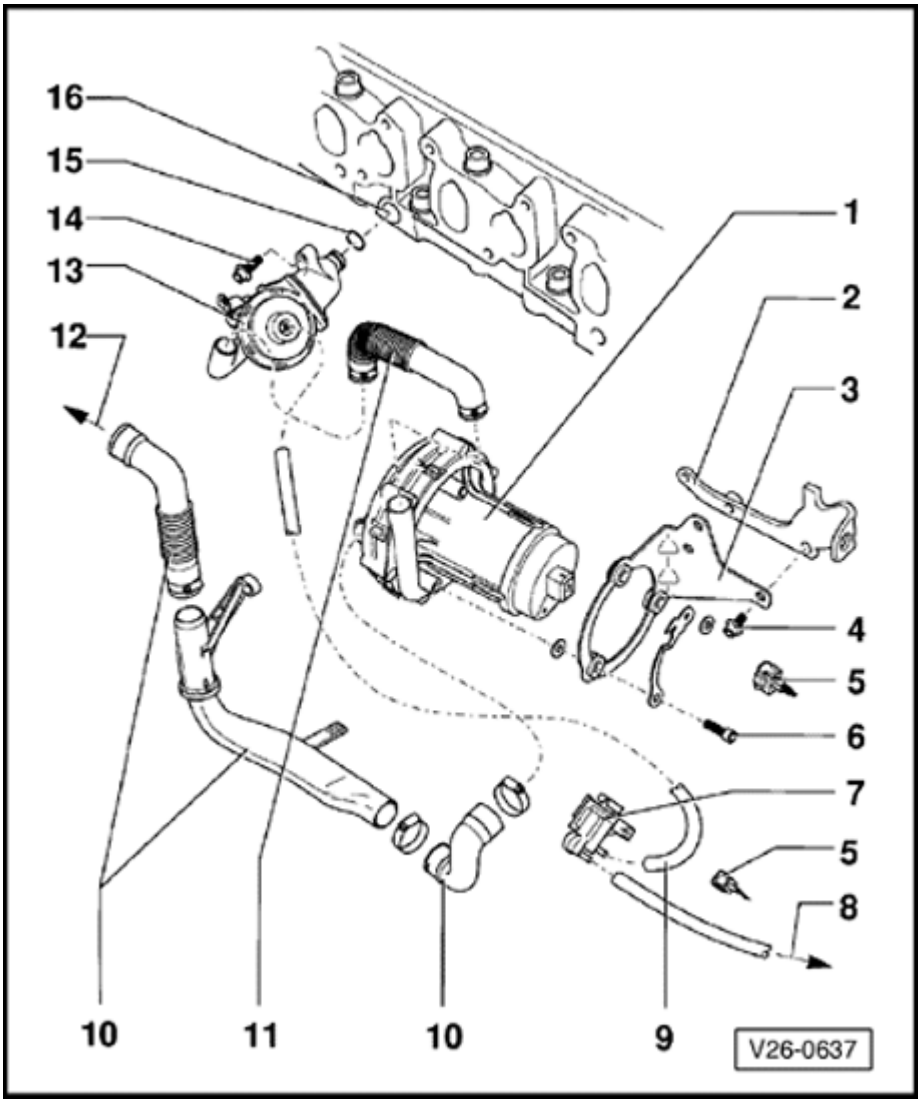

7 - Secondary Air Injection (AIR) Solenoid Valve - N112-*

- Secured at bracket (item 3)
- Checking ⇒ Page 26-19

8 - To upper part of intake manifold

- ⇒ Page 24-15 , item 6

9 - Vacuum line

- From Secondary Air Injection (AIR) solenoid valve (item 7) to combination valve (item 13)

10 - Intake hose

- Check for secure fitting

11 - Pressure hose

- Check for secure fitting

12 - To air filter

13 - Combination valve

- Checking ⇒ Page 26-27

14 - 15 Nm

26-15

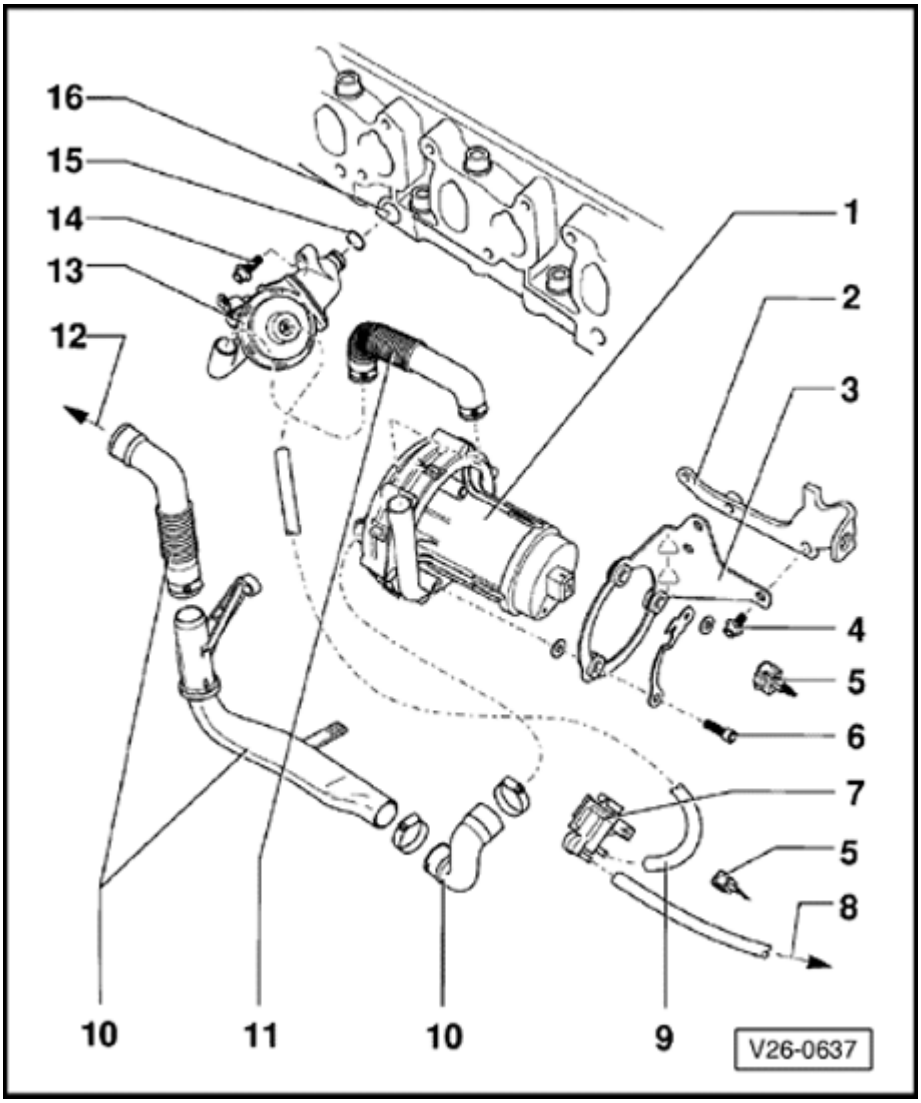

15 - O-ring

- Always replace

16 - Air channel

- In cylinder head

26-16

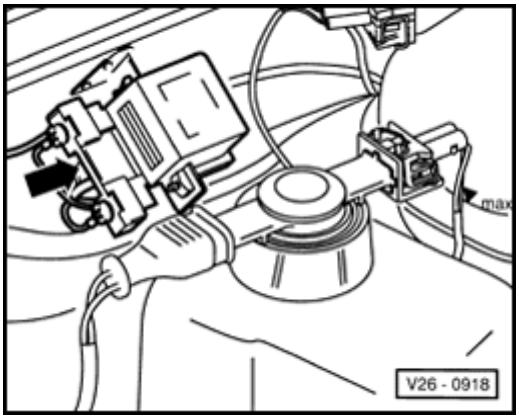

Fig. 1 Component location of Secondary Air Injection (AIR) Pump Relay - 299-* (at bulkhead in engine compartment, left)

- With fuse (arrow)

Note:

- *Remove battery Ground (GND) strap if tools are necessary for removal of relays or control modules from the relay carrier.*
- *Obtain radio code for radios with anti-theft coding before disconnecting battery.*
- *Do not use metallic tools to pry off relays from relay carrier. The terminals could conduct electricity.*

Secondary Air Injection (AIR) system, checking for proper seal

Function test

- Select the measuring value "Test-ID 03: Secondary Air Injection (AIR) system" and check whether the specified values are being reached ⇒ Page ST-33 , Diagnostic mode 6: Check test results of components that are not continuously monitored

- End diagnosis and switch ignition off.

If the specified values are not reached:

Checking proper seal

- Check the pressure hose between Secondary Air Injection (AIR) Pump Motor and combination valve for proper seal ⇒ Page 26-13 , Secondary Air Injection (AIR) system components, removing and installing.

- Repeat function test.

- Check hoses and hose connections for secure seating.

- Repeat function test.

26-18

If malfunction is no longer present:

- Erase DTC memory of Engine Control Module (ECM) ⇒ Page ST-25 , Diagnostic mode 4: Reset/erase diagnostic data.

- Generate readiness code ⇒ Page ST-50 .

26-19

Secondary Air Injection (AIR) valve, checking

Solenoid valve is closed when no voltage is present.

Recommended special tools and equipment

- V.A.G 1526 multimeter or V.A.G 1715 multimeter
- V.A.G 1594 connector test kit
- Wiring diagram

Test requirements

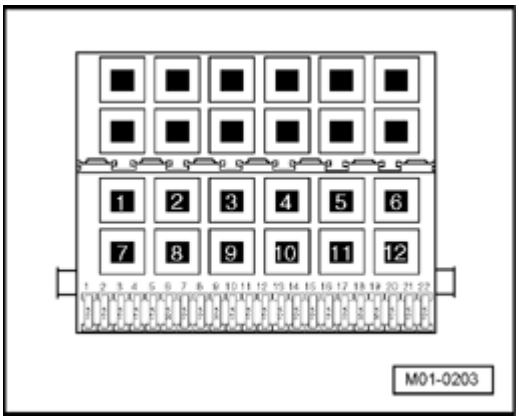

- The respective fuses of Secondary Air Injection (AIR) Solenoid Valve -N112- must be OK:

⇒ *Electrical Wiring Diagrams, Troubleshooting & Component Locations*

- Ignition switched off.

Test sequence

- Disconnect 2-pin connector from Secondary Air Injection (AIR) Solenoid Valve -N112- ⇒ Page 26-14 , item 7 .

Checking resistance

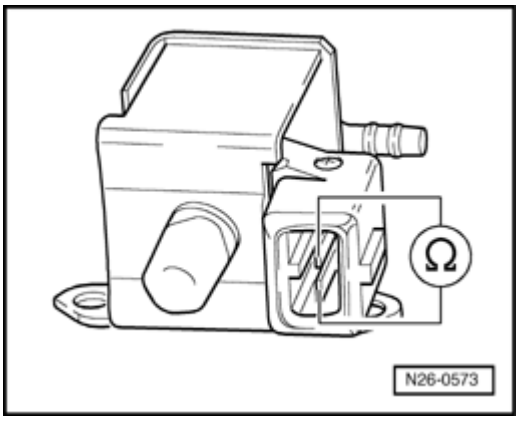

- Measure resistance between terminals of solenoid valve.

  Specified value: 25.0 to 35.0 Ω

If specified value is not obtained:

- Replace Secondary Air Injection (AIR) Solenoid Valve -N112- ⇒ Page 26-14 , item 7 .
- Erase DTC memory of Engine Control Module (ECM) ⇒ Page ST-25 , Diagnostic mode 4: Reset/erase diagnostic data.
- Generate readiness code ⇒ Page ST-50 .

If specified value is obtained:

- Check wires according to wiring diagram ⇒ Page 26-21 .

26-21

Checking wiring

- Connect test box to control module wiring harness ⇒ Page ST-10 , connect test box for wiring test.

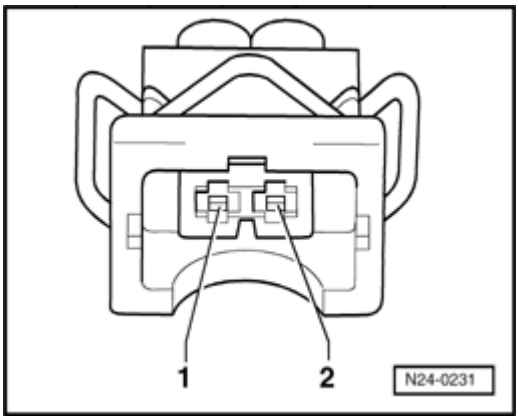

- Check wires between test box and 2-pin connector to Engine Control Module (ECM) for open circuit according to wiring diagram.

  Terminal 1 + socket 50

  Wire resistance: max. 1.5 Ω

- Check the wire for short circuit to B+ and to Ground (GND).

  Specified value: ∞ Ω

- Check wire between 2-pin connector terminal 2 and Fuel Pump (FP) Relay -J17- for open circuit according to wiring diagram.

  Wire resistance: max. 1.5 Ω

If no malfunctions are found in wires:

- Replace Motronic Engine Control Module (ECM) -J220- ⇒ Page 24-101 .

26-22

Secondary Air Injection (AIR) pump motor, checking

Recommended special tools and equipment

- V.A.G 1526 multimeter or V.A.G 1715 multimeter
- V.A.G 1594 connector test kit
- Wiring diagram

Test requirements

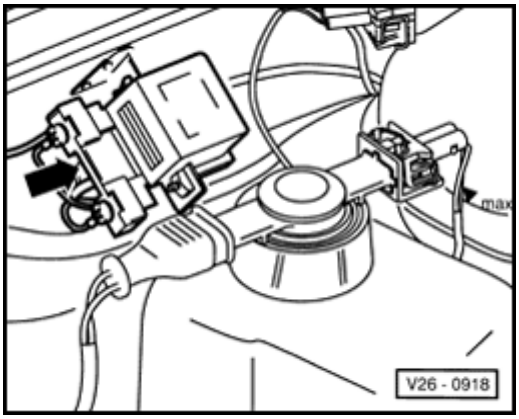

- The respective fuse (arrow) for Secondary Air Injection (AIR) Pump Relay -J299- must be OK:

⇒ *Electrical Wiring Diagrams, Troubleshooting & Component Locations*

- Secondary Air Injection (AIR) Pump Relay -J299- must be OK, check:

⇒ *Electrical Wiring Diagrams, Troubleshooting & Component Locations*

26-23

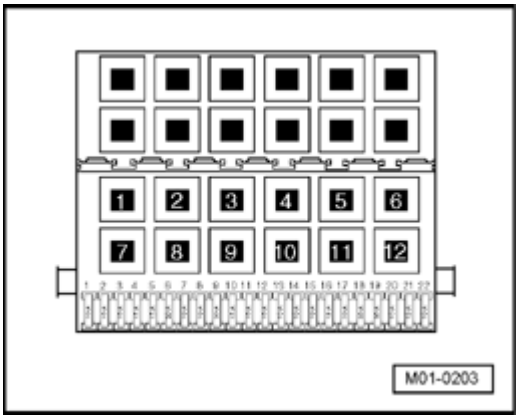

- Fuel Pump (FP) Relay -J17- must be OK, check:

⇒ *Electrical Wiring Diagrams, Troubleshooting & Component Locations*

- All electrical consumers such as, lights and rear window defroster must be switched off.
- Battery voltage must be at least 11.5 Volts.
- Ground (GND) connections between engine, transmission, and chassis must be OK.
- Ignition switched off.

Test sequence

- Remove front noise insulation.
- Disconnect 2-pin connector from Secondary Air Injection (AIR) Pump Motor -V101- ⇒ Page 26-13 , item 1 .
- Disconnect pressure hose at Secondary Air Injection (AIR) pump motor ⇒ Page 26-14 , item 11 .

Note:

To disengage, compress the buttons at the hose coupling.

26-24

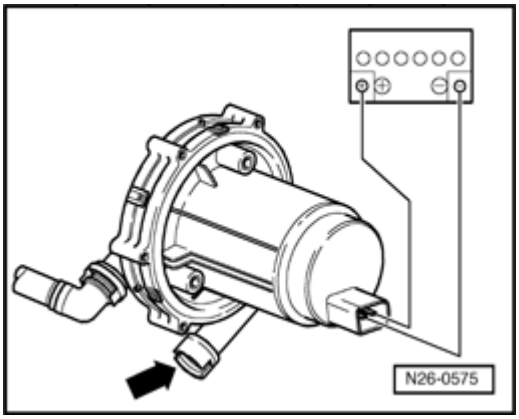

- Connect Secondary Air Injection (AIR) Pump Motor to the B+ and Ground (GND) terminals of the battery using the respective adapter cables.

  The Secondary Air Injection (AIR) Pump Motor must start up and air must escape at compressed-air connection (arrow).

If the motor does not start up, or no air or only very little air escapes:

- Disconnect connection between Secondary Air Injection (AIR) Pump Motor and battery.
- Replace Secondary Air Injection (AIR) Pump Motor -V101- ⇒ Page 26-13 , item 1
- Erase DTC memory of Engine Control Module (ECM) ⇒ Page ST-25 , Diagnostic mode 4: Reset/erase diagnostic data.
- Generate readiness code ⇒ Page ST-50 .

If motor starts, and air escapes:

- Disconnect connection between Secondary Air Injection (AIR) Pump Motor and battery.

26-25

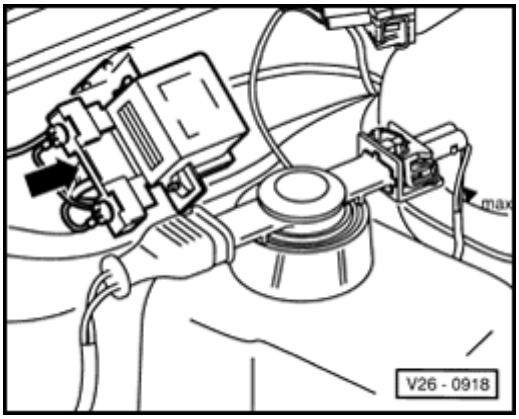

- Remove Secondary Air Injection (AIR) Pump Relay -J299- (-2-) from relay carrier (at bulkhead in engine compartment, left)

Note:

- *Remove battery Ground (GND) strap if tools are necessary for removal of relays or control modules from the relay carrier.*
- *Obtain radio code for radios with anti-theft coding before disconnecting battery.*
- *Do not use metallic tools to pry off relays from relay carrier. The terminals could conduct electricity.*

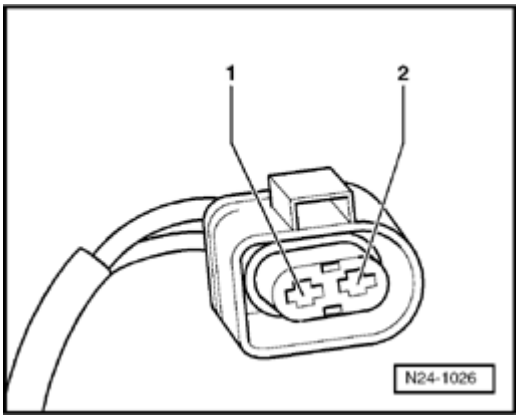

- Check wire between relay carrier and terminal 2 of 2-pin connector of Secondary Air Injection (AIR) Pump Motor for open circuit according to wiring diagram.

  Wire resistance: max. 1.5 Ω

- Check the wire for short circuit to B+ and to Ground (GND).

  Specified value: ∞ Ω

26-26

- Check wire between 2-pin connector terminal 1 and Ground (GND) for open circuit according to wiring diagram.

  Wire resistance: max. 1.5 Ω

If no malfunctions are found in wires:

- Replace Motronic Engine Control Module (ECM) -J220- ⇒ Page 24-101 .

26-27

Combination valve, checking

Recommended special tools and equipment

- V.A.G 1390 hand vacuum pump

Requirements

- No leaks in vacuum lines or hose connections.
- Vacuum hoses not clogged or kinked
- Pressure hose for Secondary Air Injection (AIR) Pump Motor not clogged or kinked

Work sequence

Note:

Do not use pressurized air for the following test

26-28

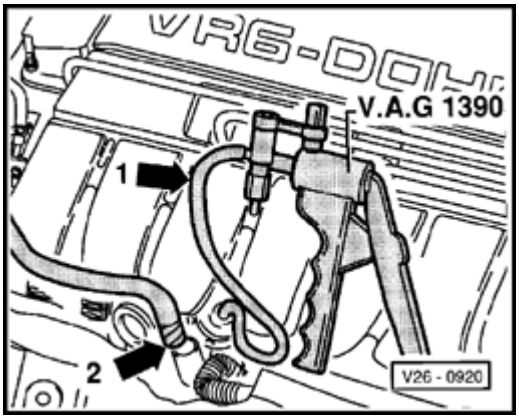

- Disconnect vacuum hose -1- to combination valve at Secondary Air Injection (AIR) Solenoid Valve -N112-.
- Connect hand vacuum pump ((V.A.G 1390) at vacuum hose -1- to combination valve.
- Disconnect pressure hose at Secondary Air Injection (AIR) pump motor -2- and blow into it with light pressure.

  Combination valve must close.
- Operate vacuum pump.

  Combination valve must open.

If the combination valve does not open or it is constantly open:

- Replace combination valve ⇒ Page 26-14 , item 13 .
- Erase DTC memory of Engine Control Module (ECM) ⇒ Page ST-25 , Diagnostic mode 4: Reset/erase diagnostic data.
- Generate readiness code ⇒ Page ST-50 .

Ignition, servicing

General notes on ignition system

This section deals specifically with ignition-related components. The other components of the injection and ignition system ⇒ Page 24-1 .

Note:

- *For the electric components to work properly, a voltage of at least 11.5 V is required.*
- *The battery must only be disconnected and connected with the ignition switched off, since the Engine Control Module (ECM) can otherwise be damaged.*
- *Engine Control Module (ECM) is equipped with On Board Diagnostic (OBD).*
- *Components marked with * are tested via On Board Diagnostic (OBD) ⇒ Page ST-21 , Diagnostic mode 3: Check DTC memory.*
- *It is possible that the control module will recognize a malfunction and store a DTC during some tests. Therefore the following work steps must be performed in the mentioned sequence after ending all tests and repairs.*

  - - Check DTC memory ⇒ Page ST-21 , Diagnostic mode 3: Check DTC Memory,

28-2

- - *Erase DTC memory* ⇒ *Page ST-25* , *Diagnostic mode 4: Reset/erase diagnostic data*

- - *For completion, generate readiness code* ⇒ *Page ST-50* .

Removing and installing ignition components ⇒ Page 28-3 .

Safety precautions ⇒ Page 28-6 .

Test data, spark plugs ⇒ Page 28-8 .

28-3

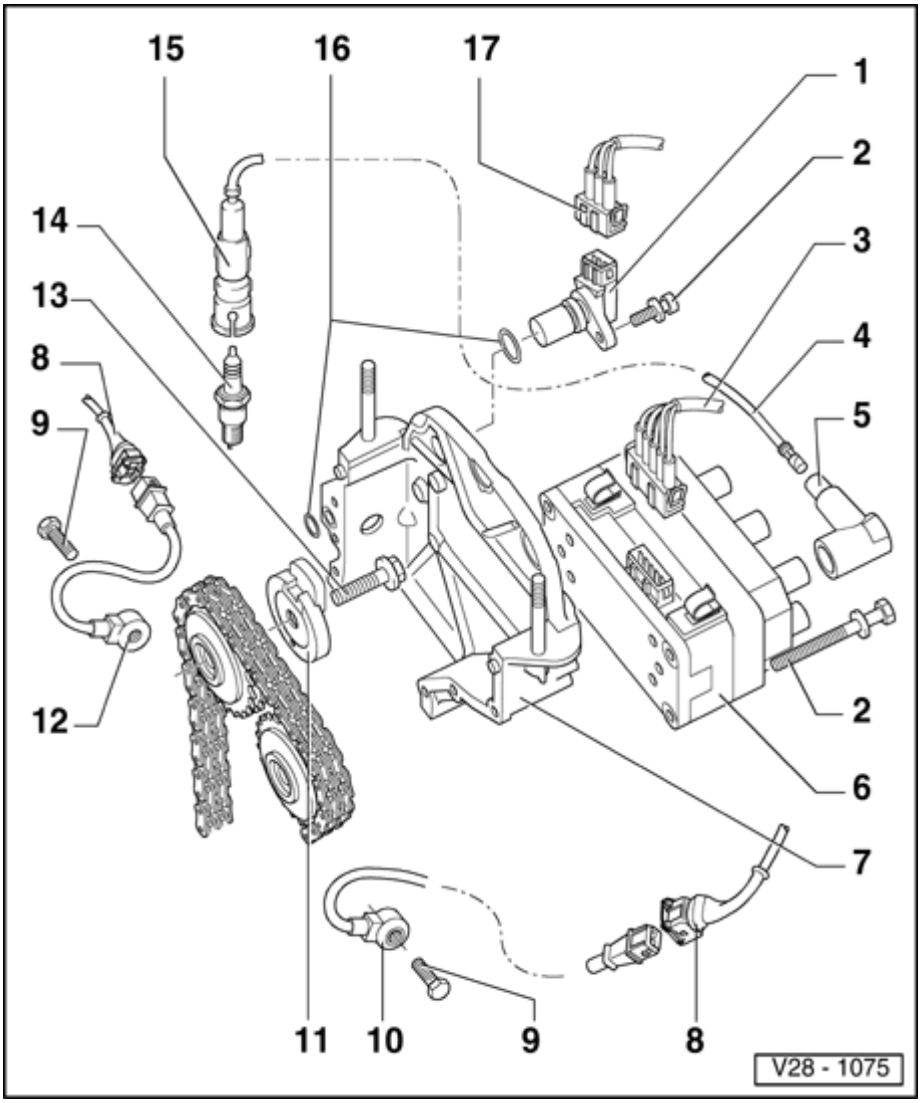

Ignition components, removing and installing

Note:

Motronic Engine Control Module (ECM) -J220- with harness connector ⇒ Page 24-7 , item 3 .*

1 - Camshaft Position (CMP) sensor -G40-*

- Note spacer rings
- Checking ⇒ Page 28-9

2 - 10 Nm

3 - Connector

- 5-pin
- For Ignition Coil -N152-

4 - Ignition wire

- Checking for continuity

5 - Interference suppression connector

- 0.6 to 1.4 kΩ

28-4

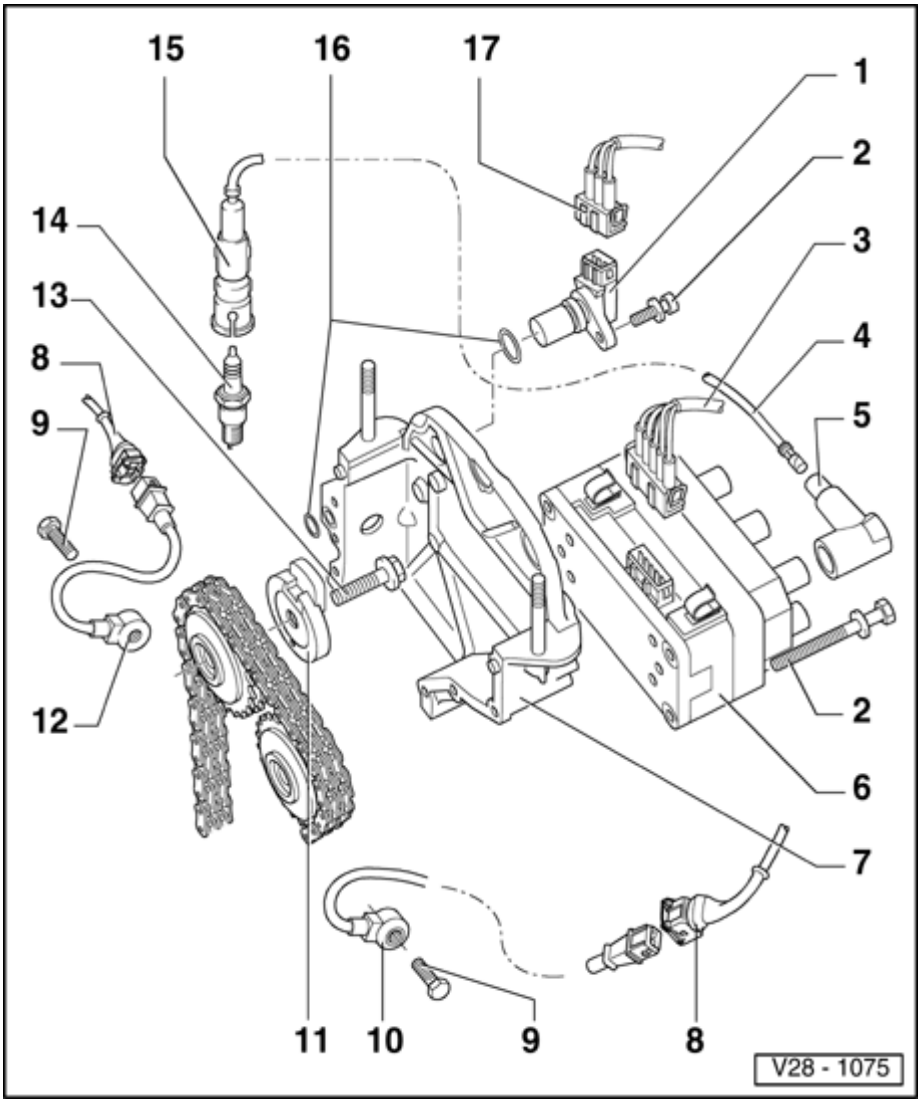

6 - Ignition Coil -N152-*

- With marking for ignition wires, do not interchange
- Component location ⇒ Page 24-2 , item no. 8
- Checking ⇒ Page 28-18

7 - Cover for camshaft gear

8 - Connector

- 3-pin
- For Knock Sensor (KS) 1 -G61- and Knock Sensor (KS) 2 -G66-

9 - 20 Nm

- Tightening torque affects function of Knock Sensor (KS)

10 - Knock Sensor (KS) 2 -G66-*

- Component location ⇒ Page 24-3 , item no. 15
- Checking ⇒ Page 28-13

11 - Sensor wheel

- For Camshaft Position (CMP) Sensor -G40- ⇒ item 1

28-5

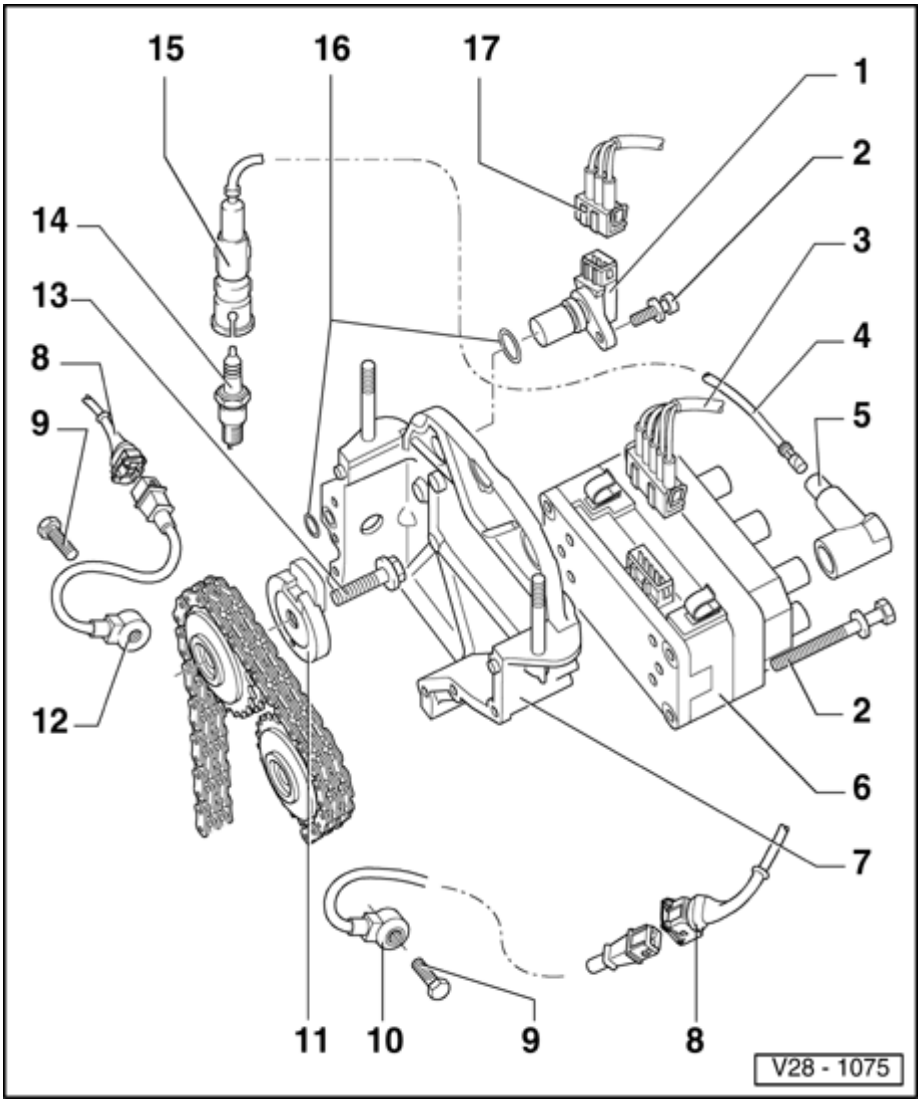

12 - Knock Sensor (KS) 1 - G61-*

- Component location ⇒ Page 24-2 , item no. 4
- Checking ⇒ Page 28-13

13 - 100 Nm

- To remove and install, counter-hold at crankshaft using an open-end wrench (24 mm)
- Oil contact surface of bolt head

14 - Spark plug, 25 Nm

- Type and spark plug gap ⇒ Page 28-8 , test data, spark plugs

15 - Spark plug connector

- 4 to 6 kΩ
- Use assembly tool 3277 to remove and install

16 - O-ring

- Replace if damaged

17 - Connector

- 3-pin
- For Camshaft Position (CMP) Sensor -G40- ⇒ item 1

28-6

Safety precautions

CAUTION!

Observe the following for all installations, especially in engine compartment due to lack of room:

- ***Route lines of all types (e.g. for fuel, hydraulic, EVAP canister system, coolant and refrigerant, brake fluid, vacuum) and electrical wiring so that the original path is followed.***

- ***Watch for sufficient clearance to all moving or hot components.***

- ***Shift selector lever into position -P- and engage parking brake before working with the engine running.***

If special testing equipment is required during road test, note the following:

- Test equipment must always be secured to the rear seat and operated from there by a second person.

  If test and measuring equipment is operated from the passenger seat, the person seated there could be injured in the event of an accident involving deployment of the passenger-side airbag.

28-7

To reduce the risk of personal injury and/or damage to the fuel injection and ignition system, always observe the following:

- Do not touch or disconnect ignition wires when engine is running or turning at starting RPM.
- Only disconnect and reconnect wires for injection and ignition system, including test leads, when ignition is switched off.
- If engine is to be cranked at starting RPM without starting:

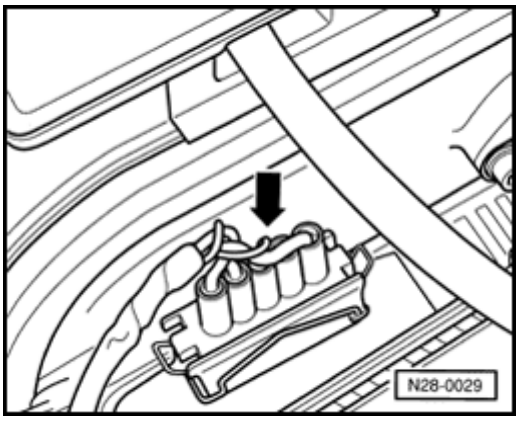

- Disconnect 5-pin connector (arrow) from Ignition Coil -N152-.

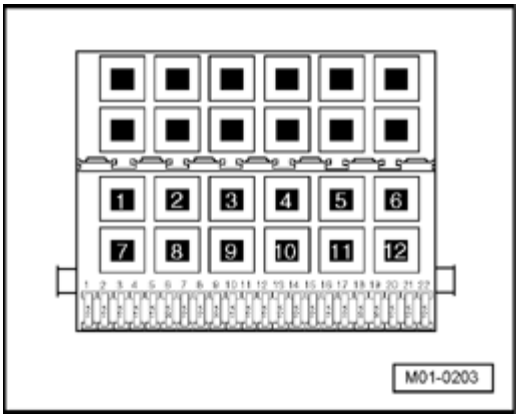

- Remove fuse 18 from fuse holder.

Note:

By removing fuse 18, voltage supply to the fuel pump is interrupted.

Test Data, Spark Plugs

Engine Code		**AAA**
Ignition sequence		1-5-3-6-2-4
Spark plugs		
	VW/Audi	101 000 035 AH
	Manufacturer code	BKR 5 EKUP
	Spark plug gap	0.7 mm[1)]
	Tightening torque	25 Nm
Engine Control Module (ECM)[2)]		
	System identification	Motronic M5.9
	Terminals at Engine Control Module (ECM)	68
	Replacement part number	See Parts catalog
	Engine speed (RPM) limitation	at approx. 6600 RPM

1) Gap between Ground (GND) electrode and center electrode insulation

2) Replacing Engine Control Module (ECM) ⇒ Page 24-101

28-9

Camshaft Position (CMP) sensor, checking

Recommended special tools and equipment

- V.A.G 1526 Multimeter
- V.A.G 1594 connector test kit
- V.A.G 1527 voltage test lamp

Requirements

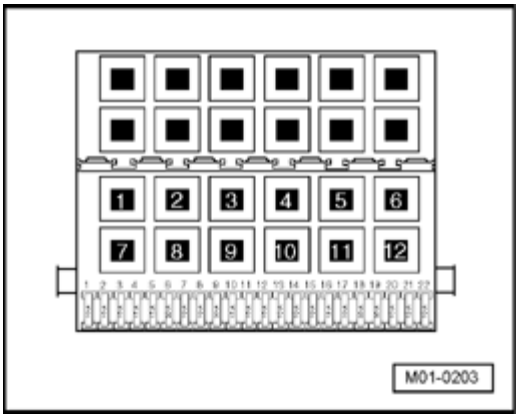

- The respective fuses of Motronic Engine Control Module (ECM) -J220- must be OK:

⇒ *Electrical Wiring Diagrams, Troubleshooting & Component Locations*

- Battery voltage must be at least 11.5 Volts.
- All electrical consumers such as, lights and rear window defroster must be switched off.
- For vehicles with automatic transmission, selector lever must be in -P-.
- Ground (GND) connections between engine, transmission, and chassis must be OK.

- Ignition switched off.
- Parking brake must be engaged or else daylight driving lights will be switched on.

Test sequence

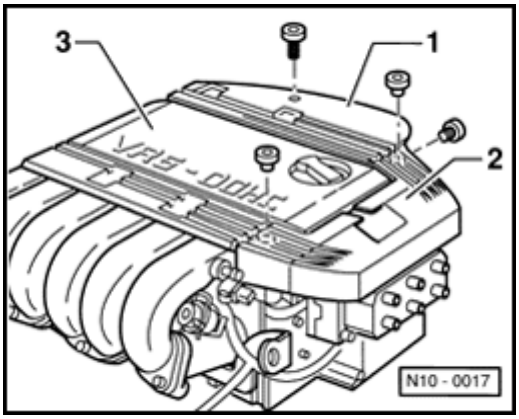

- Disconnect ignition wires from ignition coil and remove ignition wire guide -2-.

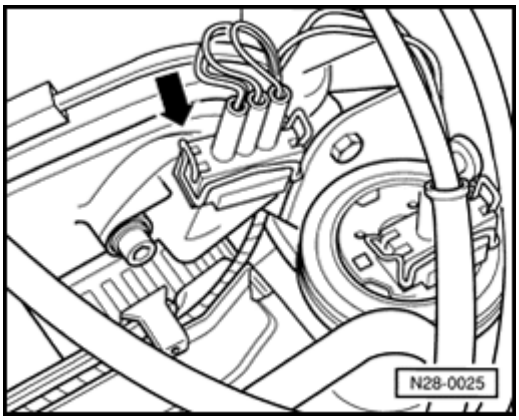

- Disconnect the 3-pin connectors from Camshaft Position (CMP) Sensor -G40- (arrow).

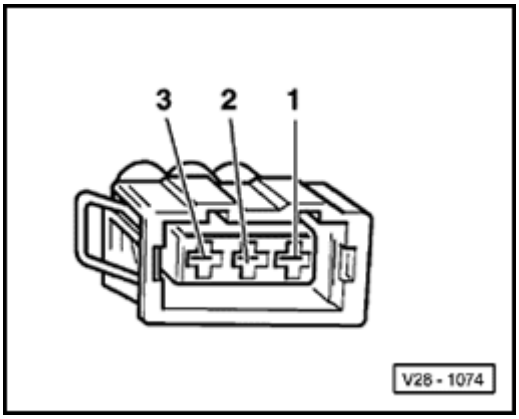

Checking voltage supply

- Connect multimeter to terminal 1 (B+) + 3 Ground (GND) of disconnected connector for Camshaft Position (CMP) sensor for voltage measurement.
- Switch ignition on.

  Specified value: at least 11.5 V
- Switch ignition off.

If there is no voltage:

- Check wires according to wiring diagram ⇒ Page 28-11 .

Checking wiring

- Connect test box to control module wiring harness ⇒ Page ST-10 , connect test box for wiring test.

28-12

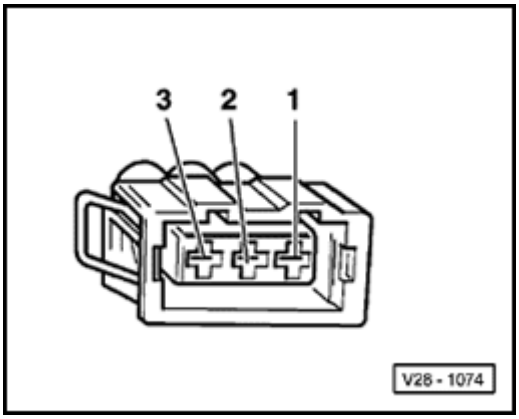

- Check wires between test box and 3-pin connector to Engine Control Module (ECM) for open circuit according to wiring diagram.

  Terminal 2 + socket 44

  Terminal 3 + socket 56

  Wire resistance: max. 1.5 Ω

- Check wire between 1-pin connector terminal 3 and relay carrier -G1/4- for open circuit according to wiring diagram.

  Wire resistance: max. 1.5 Ω

- Check wires for short circuit to each other.

  Specified value: ∞ Ω

If no malfunction is found in the wires and there was voltage between terminals 1 + 3:

- Replace Camshaft Position (CMP) Sensor -G40- ⇒ Page 28-3 , item 1 .

If no malfunction is found in the wires and there was no voltage between terminals 1 + 3:

- Replace Motronic Engine Control Module (ECM) -J220- ⇒ Page 24-101 .

28-13

Knock sensors, checking

Note:

- *Contact surfaces between knock sensor and cylinder block must be free of corrosion, dirt and grease.*
- *For the nock Sensors to function properly, it is important for tightening torque to be exactly 20 Nm.*

Recommended special tools and equipment

- V.A.G 1526 multimeter or V.A.G 1715 multimeter
- V.A.G 1594 connector test kit
- Wiring diagram

Requirements

- Knock sensor securing bolt tightened to 20 Nm.
- Ignition switched off.

28-14

Work sequence

Knock Sensor (KS) 1 -G61-

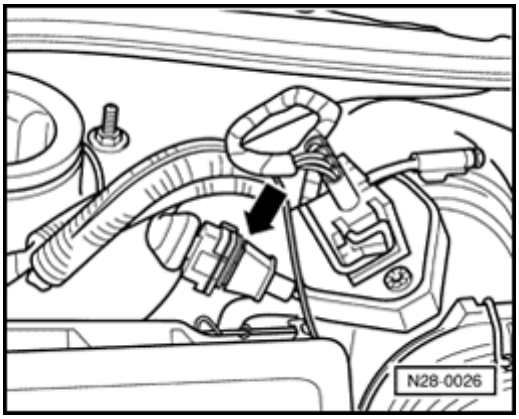

- Disconnect white 3-pin harness connector to Knock Sensor (KS) 1 -G61- (arrow).

Knock Sensor (KS) 2 -G66-

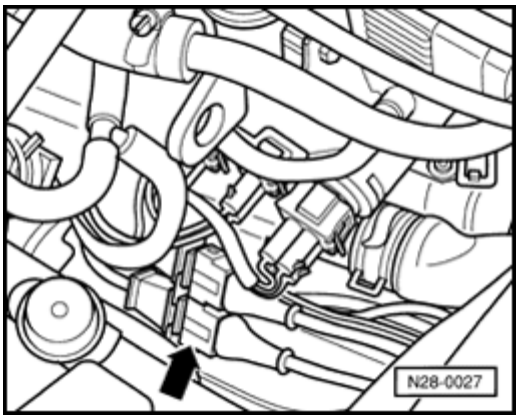

- Disconnect black 3-pin harness connector for Knock Sensor (KS) 2 -G66- (arrow).

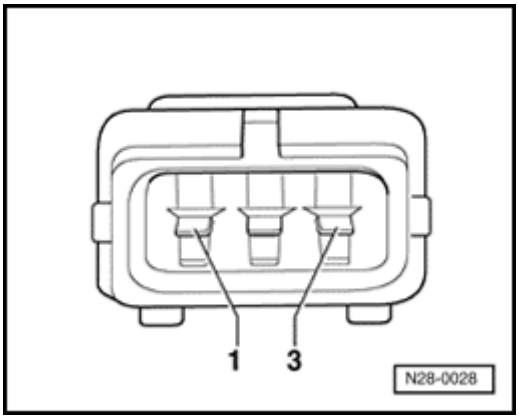

Checking resistance

- Measure resistance between terminals 1 + 2, 1 + 3 and 2 + 3 at the connections to the respective knock sensors.

  Specified value: ∞ Ω

If specified value is not obtained:

- Replace the respective knock sensor:
  - Knock Sensor (KS) 1 -G61- ⇒ Page 28-5 , item 12 ,
  - Knock Sensor (KS) 2 -G66- ⇒ Page 28-4 , item 10 .
- Erase DTC memory of Engine Control Module (ECM) ⇒ Page ST-25 , Diagnostic mode 4: Reset/erase diagnostic data.
- Generate readiness code ⇒ Page ST-50 .

If specified value is obtained:

- Check wires according to wiring diagram ⇒ Page 28-15 .

Checking wiring

- Connect test box to control module wiring harness ⇒ Page ST-10 , connect test box for wiring test.

28-16

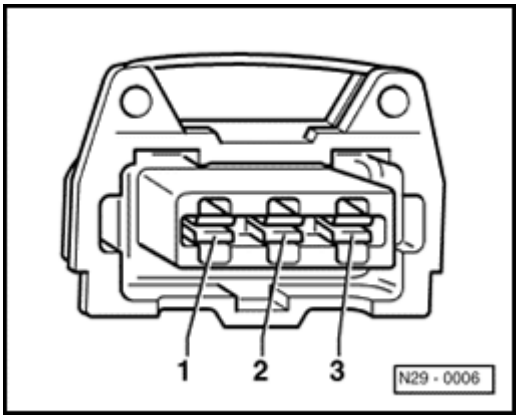

- Check wires between test box and 3-pin connector to Engine Control Module (ECM) for open circuit according to wiring diagram.

  Wire resistance: max. 1.5 Ω

Component	Connector	Test box
Knock Sensor (KS) 1 - G61-	Terminal 1	Socket 34
	Terminal 2	Socket 33
	Terminal 3	Socket 56
Knock Sensor (KS) 2 - G66-	Terminal 1	Socket 57
	Terminal 2	Socket 33
	Terminal 3	Socket 56

- Check wires for short circuit to each other.

  Specified value: ∞ Ω

28-17

If no malfunctions are detected in the wires and the resistance values were OK:

- Replace respective knock sensor:
  - Knock Sensor (KS) 1 -G61- ⇒ Page 28-5 , item 12 ,
  - Knock Sensor (KS) 2 -G66- ⇒ Page 28-4 , item 10 .
- Erase DTC memory of Engine Control Module (ECM) ⇒ Page ST-25 , Diagnostic mode 4: Reset/erase diagnostic data.
- Generate readiness code ⇒ Page ST-50 .

28-18

Ignition coil, checking

Recommended special tools and equipment

- V.A.G 1598/18 test box
- V.A.G 1526 multimeter or V.A.G 1715 multimeter
- V.A.G 1527 voltage test lamp
- V.A.G 1594 connector test kit
- Wiring diagram

Test requirements

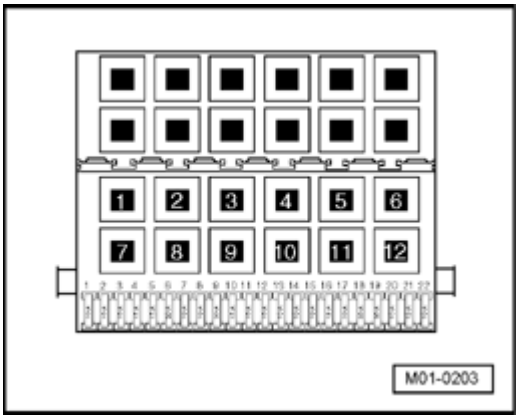

- The respective fuses of Motronic Engine Control Module (ECM) -J220- must be OK:

⇒ *Electrical Wiring Diagrams, Troubleshooting & Component Locations*

- Battery voltage must be at least 11.5 Volts.
- All electrical consumers such as, lights and rear window defroster must be switched off.

- Parking brake must be engaged or else daylight driving lights will be switched on.
- For vehicles with automatic transmission, selector lever must be in -P-.
- Ground (GND) connections between engine, transmission, and chassis must be OK.
- Ignition switched off.
- Engine Speed (RPM) Sensor -G28- OK, check ⇒ Page 24-62 .
- Camshaft Position (CMP) Sensor -G40- OK, check ⇒ Page 28-9 .

Test sequence

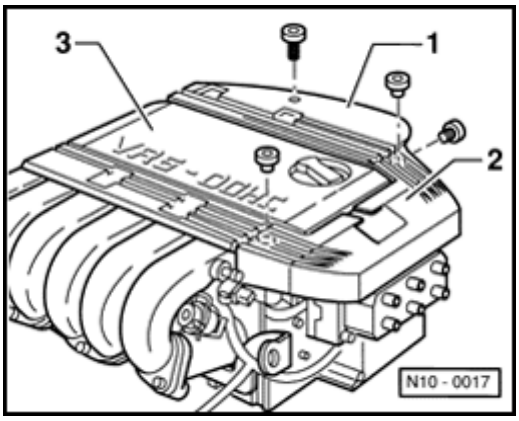

- Disconnect ignition wires from ignition coil and remove ignition wire guide -2-.

28-20

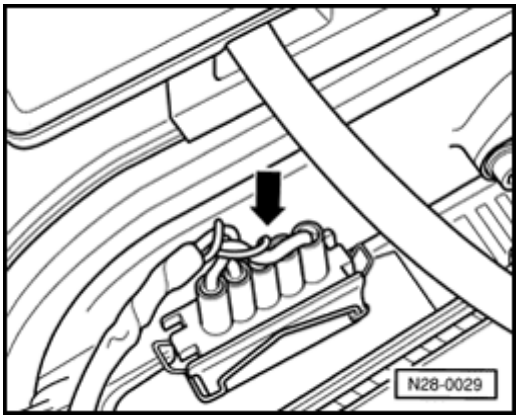

- Disconnect 5-pin connector (arrow) from Ignition Coil -N152-.

Checking voltage supply

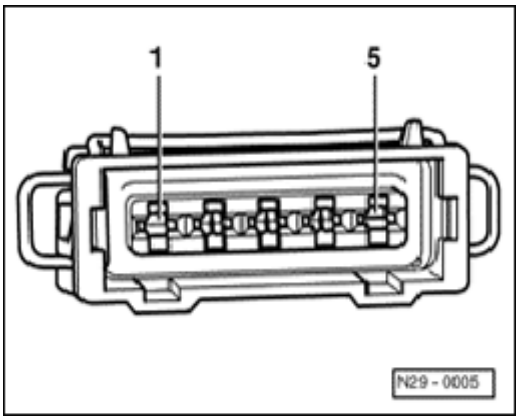

- Connect multimeter to terminal 1 (Ground -GND-) +5 (B+) of disconnected connector for ignition coil for voltage measurement.
- Switch ignition on.

  Specified value: at least 11.5 V
- Switch ignition off.

If there is no voltage:

- Check wire between 5-pin connector terminal 1 and Ground (GND) for open circuit according to wiring diagram.

  Wire resistance: max. 1.5 Ω

- Check wire between 5-pin connector terminal 5 and relay carrier -G1/4- for open circuit according to wiring diagram.

  Wire resistance: max. 1.5 Ω

Checking activation

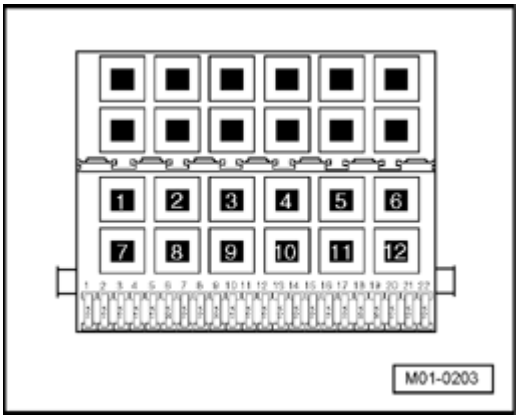

- Remove fuse 18 from fuse holder.

Note:

By removing fuse 18, voltage supply to the fuel pump is interrupted.

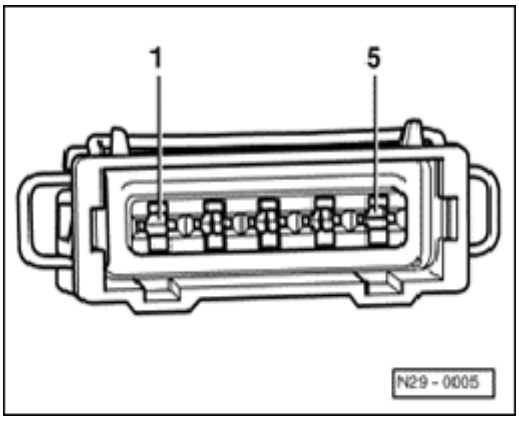

- Connect V.A.G 1527 voltage tester with adapter cables to terminals 5 and 2 (ignition output 1),

  5 and 3 (ignition output 3),

  5 and 4 (ignition output 2) of disconnected connector.
- Operate starter and check ignition signal from Engine Control Module (ECM).

  LED must flicker.
- Switch ignition off.

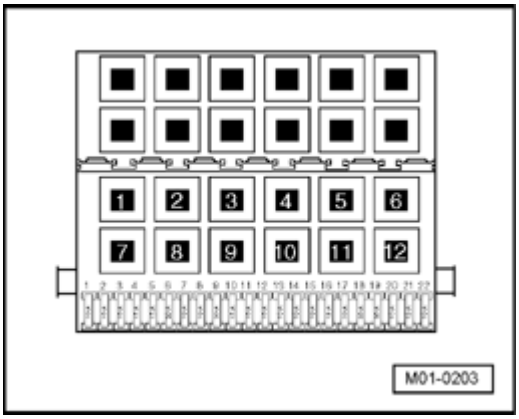

- Re-insert fuse 18 for fuel pump into fuse holder.

If LED does not flicker:

- Replace Motronic Engine Control Module (ECM) - J220- ⇒ Page 24-101 .

If LED flickers:

- Check wires according to wiring diagram ⇒ Page 28-22 .

Checking wiring

- Connect test box to control module wiring harness ⇒ Page ST-10 , connect test box for wiring test.

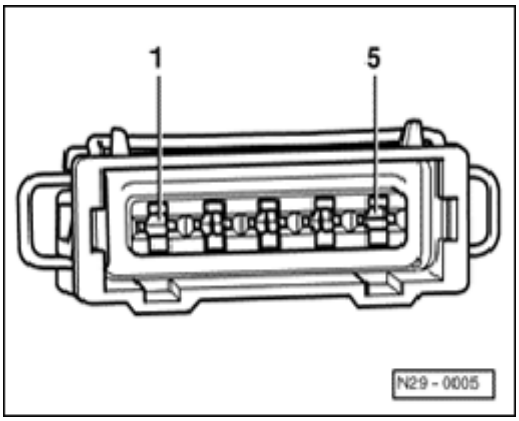

- Check wires between test box and 5-pin connector to Engine Control Module (ECM) for open circuit according to wiring diagram.

  Terminal 2 + socket 8

  Terminal 3 + socket 60

  Terminal 4 + socket 52

  Wire resistance: max. 1.5 Ω

- Check wires for short circuit to each other.

  Specified value: ∞ Ω

If no malfunction is found in the wires and there was voltage between terminals 1 +5:

- Replace Ignition Coil -N152- ⇒ Page 28-4 , item 6 .
- Erase DTC memory of Engine Control Module (ECM) ⇒ Page ST-25 , Diagnostic mode 4: Reset/erase diagnostic data.
- Generate readiness code ⇒ Page ST-50 .

Checking secondary resistances

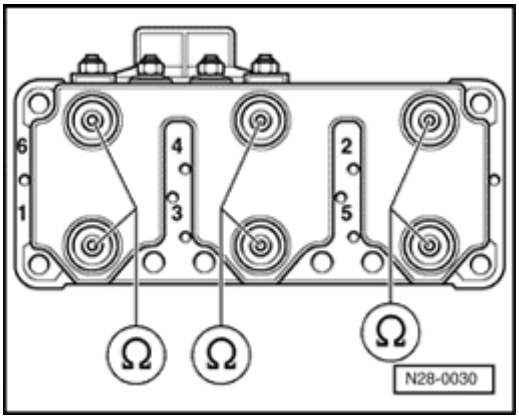

- Check secondary resistances at terminal 4 between

  Cyl. 1 and cyl. 6,

  Cyl. 3 and cyl. 4,

  Cyl. 2 and cyl. 5.

  Specified value: 3.6 to 4.4 kΩ

If specified values are not obtained:

- Replace Ignition Coil -N152- ⇒ Page 28-4 , item 6 .
- Erase DTC memory of Engine Control Module (ECM) ⇒ Page ST-25 , Diagnostic mode 4: Reset/erase diagnostic data.
- Generate readiness code ⇒ Page ST-50 .

Transmission control electrical components, removing and installing, checking

Safety precautions

CAUTION!

Observe the following for all installations, especially in engine compartment due to lack of room:

- ***Route lines of all types (e.g. for fuel, hydraulic, EVAP canister system, coolant and refrigerant, brake fluid, vacuum) and electrical wiring so that the original path is followed.***
- ***Watch for sufficient clearance to all moving or hot components.***
- ***Shift selector lever into position -P- and engage parking brake before working with the engine running.***

If special testing equipment is required during road test, note the following:

- Test equipment must always be secured to the rear seat and operated from there by a second person.

38-2

If test and measuring equipment is operated from the passenger seat, the person seated there could be injured in the event of an accident involving deployment of the passenger-side airbag.

Note:

- *For the electric components to work properly, a voltage of at least 11.5 V is required.*
- *Transmission Control Module (TCM) is equipped with On Board Diagnostic (OBD).*
- *It is possible that the control module will recognize a malfunction and store a DTC during some tests. Therefore the following work steps must be performed in the mentioned sequence after ending all tests and repairs.*

  - - Check DTC memory ⇒ Page ST-21 , Diagnostic mode 3: Check DTC Memory,

  - - Erase DTC memory ⇒ Page ST-25 , Diagnostic mode 4: Reset/erase diagnostic data

  - - For completion, generate readiness code ⇒ Page ST-50 .

38-3

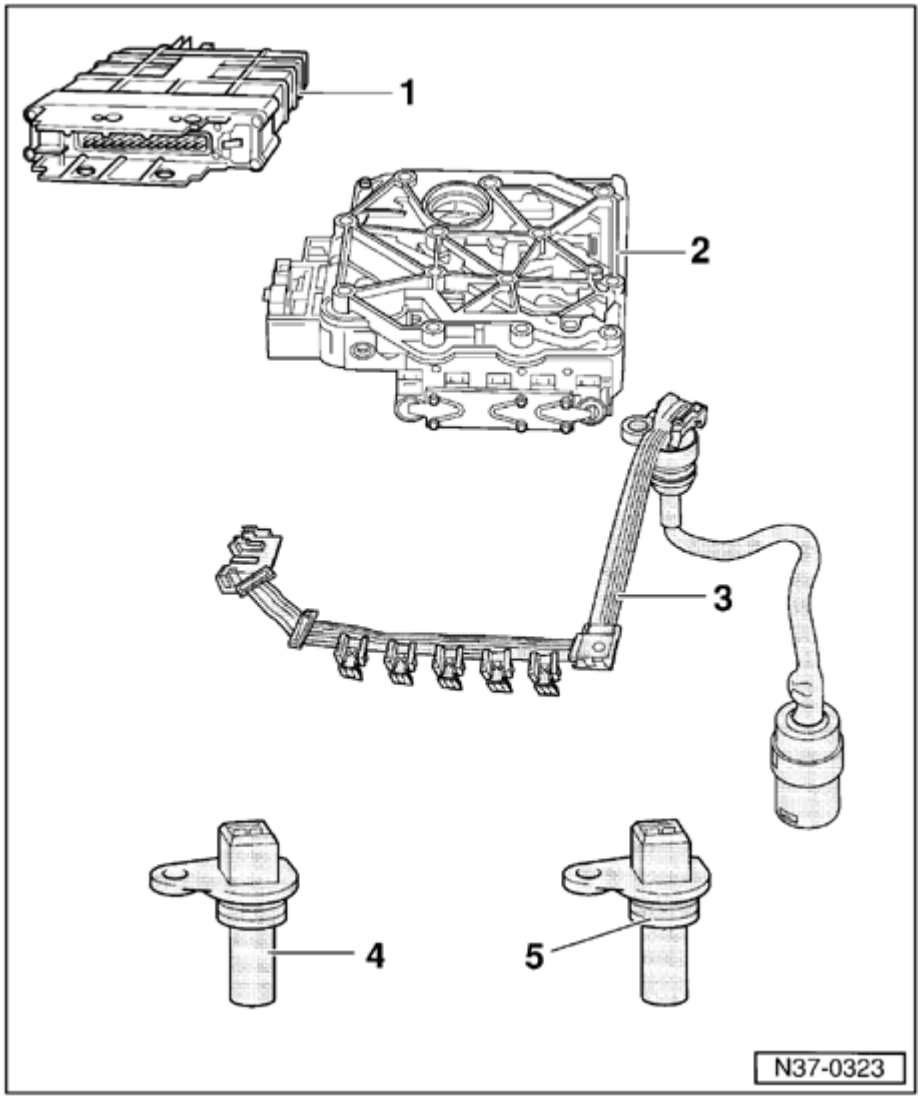

Electrical/electronic components and component locations

1 - Transmission Control Module (TCM) - 217-

- Component location ⇒ Fig. 1
- Always replace ⇒ Page 38-28

2 - Valve body

- Component location ⇒ Fig. 2
- Solenoid Valve 1 -N88- to Solenoid Valve 7 -N94- are secured to valve body
- Check solenoid valves in valve body ⇒ Page 38-22

3 - Circuit board with integrated Transmission Fluid Temperature Sensor -G93-

- Component location ⇒ Fig. 6
- Check Transmission Fluid Temperature Sensor -G93- ⇒ Page 38-19

38-4

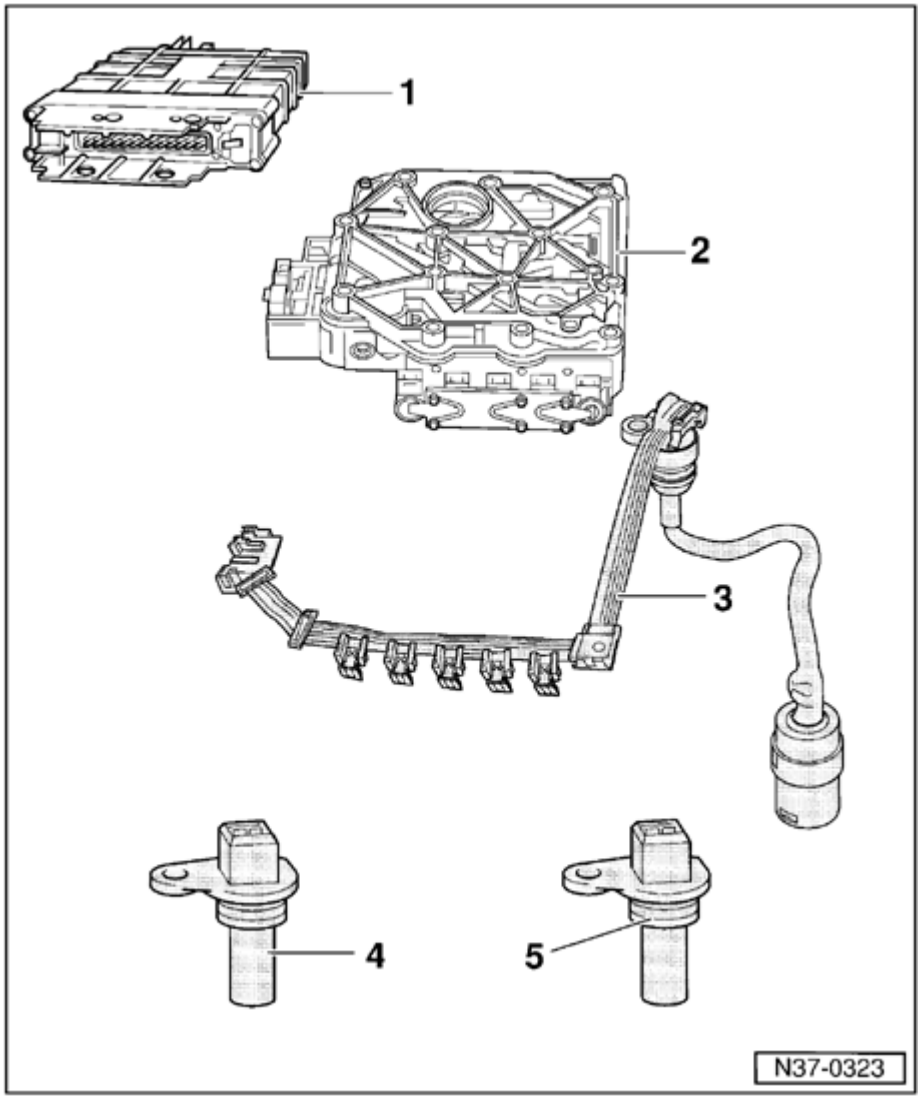

4 - Transmission Vehicle Speed Sensor (VSS) - G38-

- White, 2-pin connector
- Before disconnecting, mark allocation of connector to component
- Removing and installing ⇒ Fig. 3
- Checking ⇒ Page 38-13

5 - Vehicle Speed Sensor (VSS) -G68-

- 2-pin connector, black
- Before disconnecting, mark allocation of connector to component
- Removing and installing ⇒ Fig. 4
- Checking ⇒ Page 38-16

The following component is not shown:

Multi-Function Transmission Range (TR) Switch -F125-

- Removing and installing ⇒ Fig. 5
- Checking ⇒ Page 38-10

38-5

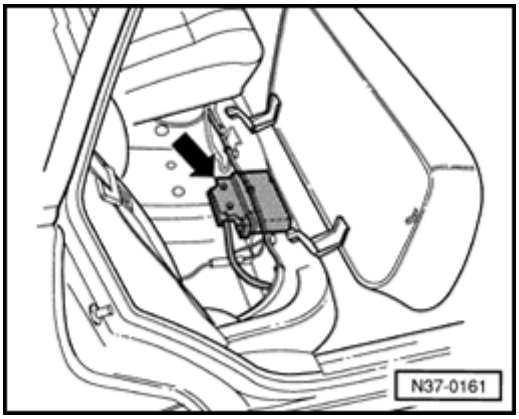

Fig. 1 Transmission Control Module (TCM) - 217-

Component location: Control module (arrow) is installed under the rear seat bench.

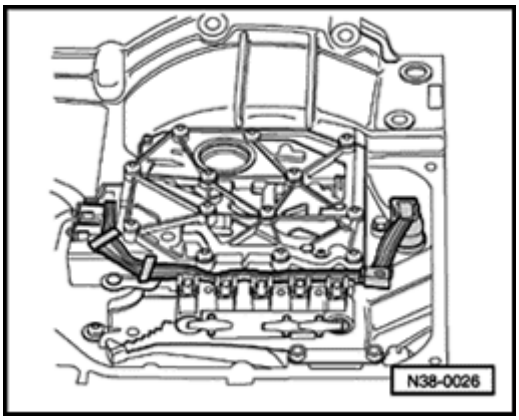

Fig. 2 Valve body

Component location: Valve body is located beneath the oil pan.

Solenoid Valve 1 -N88- to Solenoid Valve 7 -N94- are secured to valve body.

38-6

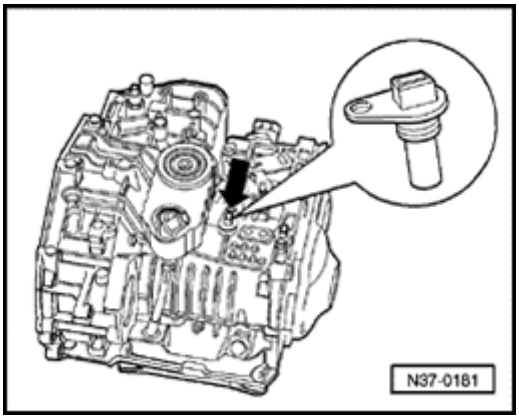

Fig. 3 Transmission Vehicle Speed Sensor (VSS) -G38-, removing and installing

Component location: Transmission Vehicle Speed Sensor (VSS) (arrow) is located on top of transmission.

Recommended special tools and equipment

- V.A.G 1331 torque wrench (5 to 50 Nm)

Removing

- Disconnect white connector from Transmission Vehicle Speed Sensor (VSS) -G38-.
- Remove bolt and sensor.
- Replace O-ring.

Installing

Installation is performed in reverse order of removal.

- Tighten bolt to 10 Nm.

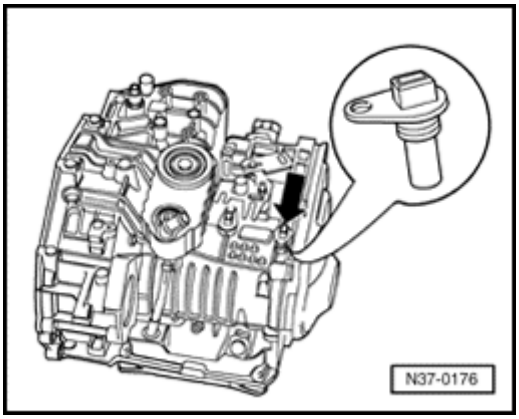

Fig. 4 Vehicle Speed Sensor (VSS) -G68-, removing and installing

Component location: Vehicle Speed Sensor (VSS) (arrow) is located on top of transmission.

Recommended special tools and equipment

- V.A.G 1331 torque wrench (5 to 50 Nm)

Removing

- Disconnect black connector from Vehicle Speed Sensor (VSS) -G68-.
- Remove bolt and sensor.
- Replace O-ring.

Installing

Installation is performed in reverse order of removal.

- Tighten bolt to 10 Nm.

38-8

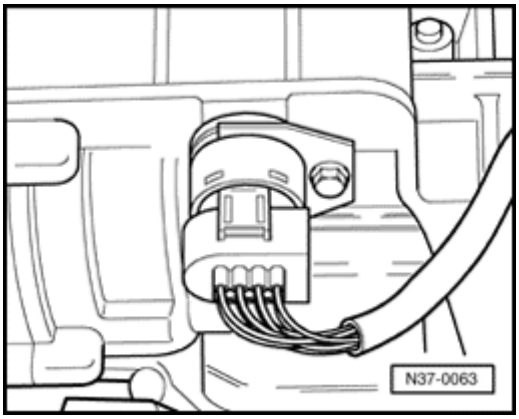

Fig. 5 Multi-Function Transmission Range (TR) Switch -F125-, removing and installing

Component location: Multi-function switch is located at rear on transmission.

Recommended special tools and equipment

- V.A.G 1331 torque wrench (5 to 50 Nm)

Removing

- Disconnect 8-pin connector from multi-function switch.
- Remove bolt and retainer.
- Remove Multi-Function Transmission Range (TR) Switch.
- Replace O-ring.

Installing

Installation is performed in reverse order of removal.

- Tighten bolt to 10 Nm.

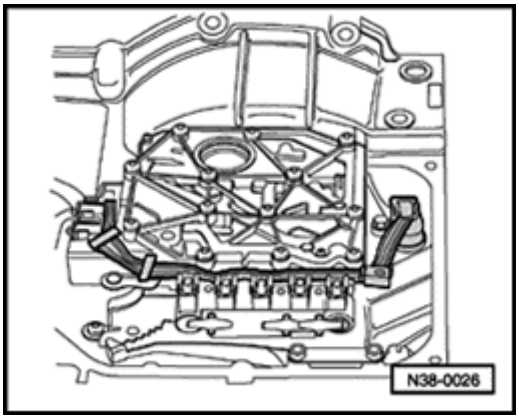

Fig. 6 Circuit board with integrated Transmission Fluid Temperature Sensor -G93-

Component location: Circuit board is located in oil pan at the valve body.

Circuit board can be replaced with transmission installed without removing valve body.

Do not bend or damage circuit board.

Multi-Function Transmission Range (TR) Switch, checking

Recommended special tools and equipment

- V.A.G 1526 multimeter or V.A.G 1715 multimeter
- V.A.G 1594 connector test kit
- Wiring diagram

Test requirements

- Selector lever must be in -P- position.
- Ground (GND) connections to transmission must be OK.
- Ignition switched off.

Checking wiring

- Connect test box to control module wiring harness ⇒ Page ST-10 , connect test box for wiring test.

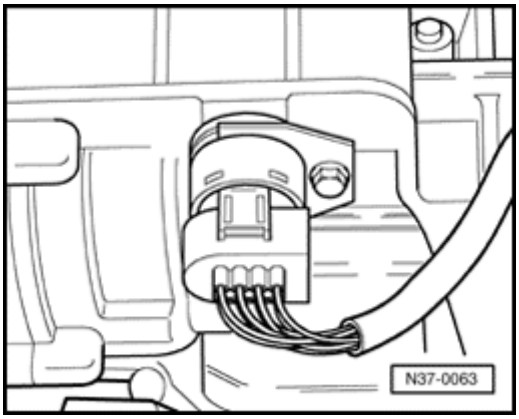

- Disconnect 8-pin connector from Multi-Function Transmission Range (TR) Switch -F125-.

38-11

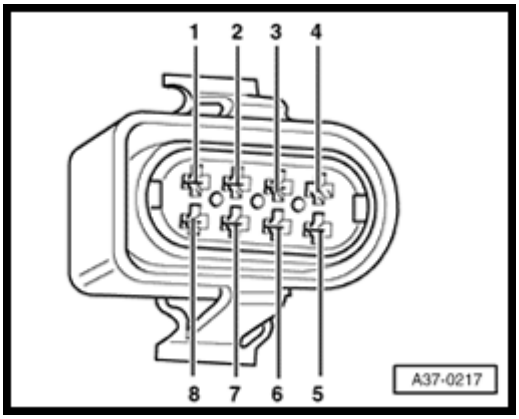

- Check wires between test box and 8-pin connector to Transmission Control Module (TCM) for open circuit according to wiring diagram.

  Terminal 1 + socket 63

  Terminal 2 + socket 40

  Terminal 3 + socket 1

  Terminal 5 + socket 23

  Terminal 6 + socket 62

  Terminal 7 + socket 18

  Wire resistance: max. 1.5 Ω

- Check wires for short circuit to each other.

  Specified value: ∞ Ω

If no malfunctions are found in wires:

- Check adjustment of selector lever cable:

⇒ *Repair Manual, 4 Spd. Automatic Transmission 01M, Repair Group 37 shift mechanism, repairing selector lever cable, checking and adjusting*

- Erase DTC memory of Transmission Control Module (TCM) ⇒ Page ST-25 , Diagnostic mode 4: Reset/erase diagnostic data.

- Generate readiness code ⇒ Page ST-50 .

If no malfunctions are detected in the wires and selector lever cable adjustment OK:

- Replace Multi-Function Transmission Range (TR) Switch -F125- ⇒ Page 38-8 , item ⇒ Fig. 5 .

- Erase DTC memory of Transmission Control Module (TCM) ⇒ Page ST-25 , Diagnostic mode 4: Reset/erase diagnostic data.

- Generate readiness code ⇒ Page ST-50 .

38-13

Transmission Vehicle Speed Sensor (VSS), checking

Recommended special tools and equipment

- V.A.G 1526 multimeter or V.A.G 1715 multimeter
- V.A.G 1594 connector test kit
- Wiring diagram

Requirements

- Selector lever must be in -P- position.
- Ground (GND) connections to transmission must be OK.
- Ignition switched off.

Checking wiring

- Connect test box to control module wiring harness ⇒ Page ST-10 , connect test box for wiring test.

38-14

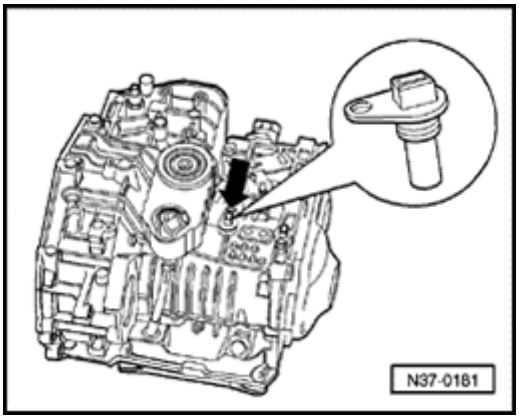

- Disconnect white connector from Transmission Vehicle Speed Sensor (VSS) -G38-.

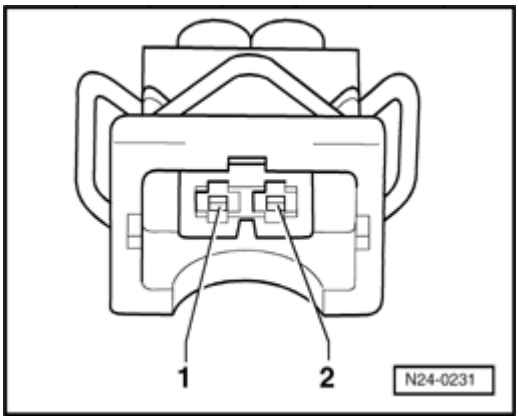

- Check wires between test box and 2-pin connector to Transmission Control Module (TCM) for open circuit according to wiring diagram.

  Terminal 1 + socket 21

  Terminal 2 + socket 66

  Wire resistance: max. 1.5 Ω

- Check wires for short circuit to each other, to vehicle Ground (GND) and to B+.

  Specified value: ∞ Ω

If no malfunctions are found in wires:

- Replace Transmission Vehicle Speed Sensor (VSS) -G38- ⇒ Page 38-6 , ⇒ Fig. 3 .

- Erase DTC memory of Transmission Control Module (TCM) ⇒ Page ST-25 , Diagnostic mode 4: Reset/erase diagnostic data.

- Generate readiness code ⇒ Page ST-50 .

38-16

Vehicle Speed Sensor (VSS), checking

Recommended special tools and equipment

- V.A.G 1526 multimeter or V.A.G 1715 multimeter
- V.A.G 1594 connector test kit
- Wiring diagram

Test requirements

- Selector lever must be in -P- position.
- Ground (GND) connections to transmission must be OK.
- Ignition switched off.

Checking wiring

- Connect test box to control module wiring harness ⇒ Page ST-10 , connect test box for wiring test.

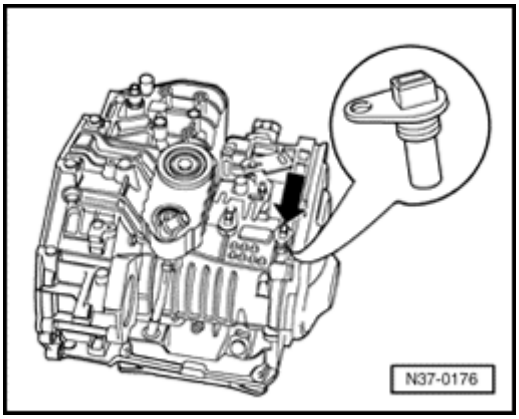

- Disconnect black connector from Vehicle Speed Sensor (VSS) -G68-.

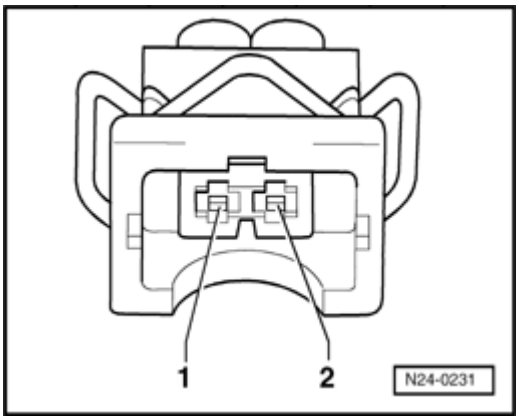

- Check wires between test box and 2-pin connector to Transmission Control Module (TCM) for open circuit according to wiring diagram.

  Terminal 1 + socket 65

  Terminal 2 + socket 20

  Wire resistance: max. 1.5 Ω

- Check wires for short circuit to each other, to vehicle Ground (GND) and to B+.

  Specified value: ∞ Ω

If no malfunctions are found in wires:

- Replace Vehicle Speed Sensor (VSS) -G68- ⇒ Page 38-7 , ⇒ Fig. 4 .

- Erase DTC memory of Transmission Control Module (TCM) ⇒ Page ST-25 , Diagnostic mode 4: Reset/erase diagnostic data.

- Generate readiness code ⇒ Page ST-50 .

Transmission Fluid Temperature Sensor, checking

Recommended special tools and equipment

- V.A.G 1526 multimeter or V.A.G 1715 multimeter
- V.A.G 1594 connector test kit
- Wiring diagram

Requirements

- Selector lever must be in -P- position.
- Ground (GND) connections to transmission must be OK.
- Ignition switched off.

Work sequence

- Connect test box to control module wiring harness ⇒ Page ST-10 , connect test box for wiring test.

Checking resistance

- Measure resistance of Transmission Fluid Temperature Sensor -G93- at test box between sockets 6 + 67:

ATF temperature	Specified value
approx. 20 ° C	230.0 to 265.0 KΩ
approx. 60 ° C	37.0 to 51.0 KΩ
approx. 120 ° C	5.0 to 9.0 KΩ

If one of the specified values is not obtained:

- Check wires according to wiring diagram ⇒ Page 38-20 .

Checking wiring

- Disconnect 12-pin harness connector at transmission.

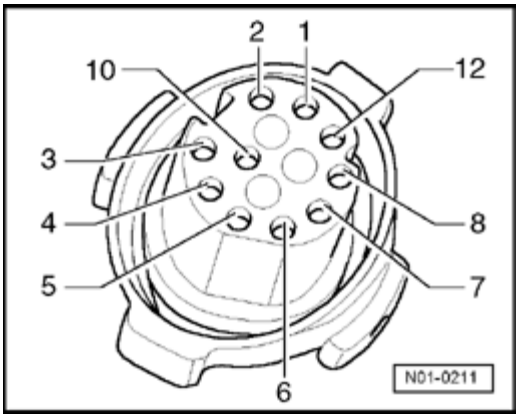

- Check wires between test box and 12-pin connector to Transmission Control Module (TCM) for open circuit according to wiring diagram.

  Terminal 1 + socket 67

  Terminal 12 + socket 6

  Wire resistance: max. 1.5 Ω

- Check wires for short circuit to each other, to vehicle Ground (GND) and to B+.

  Specified value: ∞ Ω

If no malfunctions are found in wires:

- Replace circuit board with integrated Transmission Fluid Temperature Sensor -G93-:

⇒ *Repair Manual, 4 Spd. Automatic Transmission 01M, Repair Group 38 removing and installing valve body*

- Erase DTC memory of Transmission Control Module (TCM) ⇒ Page ST-25 , Diagnostic mode 4: Reset/erase diagnostic data.

- Generate readiness code ⇒ Page ST-50 .

Solenoid valves in valve body, checking

Recommended special tools and equipment

- V.A.G 1526 multimeter or V.A.G 1715 multimeter
- V.A.G 1594 connector test kit
- Wiring diagram

Requirements

- Selector lever must be in -P- position.
- Ground (GND) connections to transmission must be OK.
- Ignition switched off.

Work sequence

- Connect test box to control module wiring harness ⇒ Page ST-10 , connect test box for wiring test.

Checking resistance

- Measure resistance of solenoid valves at test box between sockets:

Component	Bushing	Specified value Ω
Solenoid valve 1 - N88-	55 + 67	55.0 to 65.0
Solenoid valve 2 - N89-	54 + 67	55.0 to 65.0
Solenoid valve 3 - N90-	9 + 67	55.0 to 65.0
Solenoid Valve 4 - N91-	47 + 67	4.5 to 6.5

Component	Bushing	Specified value Ω
Solenoid valve 5 - N92-	56 + 67	55.0 to 65.0
Solenoid Valve 6 - N93-	22 + 58	4.5 to 6.5
Solenoid Valve 7 - N94-	10 + 67	55.0 to 65.0

Note:

Resistance value is valid at approx. 20° C. At higher temperatures, resistance value increases.

If one of the specified values is not obtained:

- Check wires according to wiring diagram ⇒ Page 38-24 .

Checking wiring

- Disconnect 12-pin harness connector at transmission.

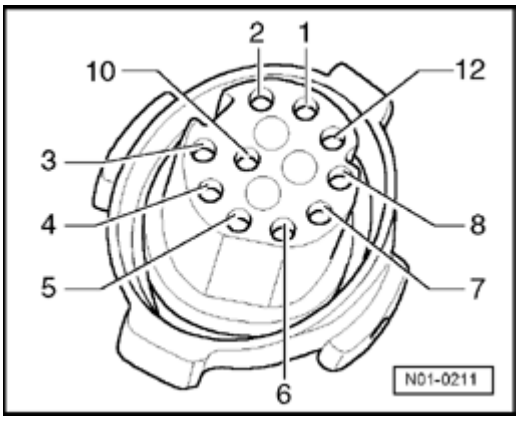

- Check wires between test box and 12-pin connector to Transmission Control Module (TCM) for open circuit according to wiring diagram.

  Wire resistance: max. 1.5 Ω

Component	Connector	Test box
Solenoid valve 1 -N88-	Terminal 1	Socket 67
	Terminal 3	Socket 55
Solenoid valve 2 -N89-	Terminal 1	Socket 67
	Terminal 4	Socket 54
Solenoid valve 3 -N90-	Terminal 1	Socket 67
	Terminal 5	Socket 9
Solenoid Valve 4 -N91-	Terminal 1	Socket 67
	Terminal 6	Socket 47
Solenoid valve 5 -N92-	Terminal 1	Socket 67
	Terminal 7	Socket 56
Solenoid Valve 6 -N93-	Terminal 2	Socket 22
	Terminal 8	Socket 58
Solenoid Valve 7 -N94-	Terminal 1	Socket 67
	Terminal 10	Socket 10

- Check wires for short circuit to each other.

  Specified value: ∞ Ω

If no malfunctions are found in wires:

- Replace circuit board or valve body:

⇒ *Repair Manual, 4 Spd. Automatic Transmission 01M, Repair Group 38 removing and installing valve body*

- Erase DTC memory of Transmission Control Module (TCM) ⇒ Page ST-25 , Diagnostic mode 4: Reset/erase diagnostic data.

- Generate readiness code ⇒ Page ST-50 .

Transmission Control Module (TCM)

Function

Transmission Control Module (TCM) receives information from components that affect shifts and forwards this information to solenoid valves, which control slide valves in valve body.

38-28

Transmission Control Module (TCM), replacing

Requirement

- Ignition switched off.

Work sequence

Note:

Control module is installed under the rear seat bench.

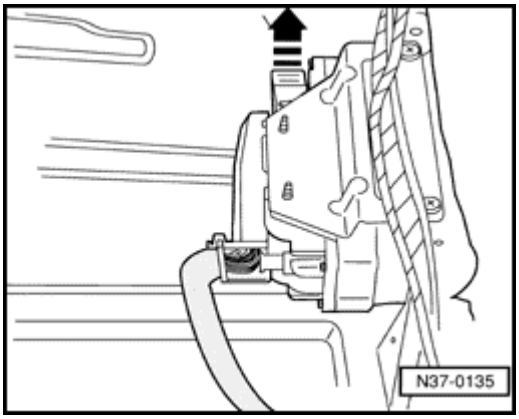

- Disengage connector in -direction of arrow- and disconnect from control module.
- Remove old control module and insert new one.
- Install connector from control module and engage.
- Generate readiness code ⇒ Page ST-50 .

General information for On Board Diagnostic (OBD)

Characteristics of On Board Diagnostic (OBD)

Engine Control Modules (ECM) and Transmission Control Module (TCM) are equipped with a DTC memory.

Malfunction recognition

If malfunctions occur at the exhaust relevant systems or components, they are stored in DTC memory with a description of the malfunction type.

The Engine Control Module (ECM) differentiates between different DTCs after evaluating the information DTC tables, ⇒ Page ST-54 .

The stored malfunctions can be checked with a standard diagnostic tester ⇒ Page ST-21 , Diagnostic mode 3: Check DTC memory.

When harness connector is disconnected from the Engine Control Module (ECM) or the battery is disconnected, all adaptation values in the control module are erased. DTC memory content will remain intact however. If the engine is started after this, rough, uneven idle can result. In this case, the readiness code must be generated again ⇒ Page ST-50 .

The following work steps must be performed in the described sequence after the malfunction(s) have been repaired:

1. - Check DTC memory ⇒ Page ST-21 , Diagnostic mode 3: Check DTC memory.

2. - Erase DTC memory ⇒ Page ST-25 , Diagnostic mode 4: Reset/erase diagnostic data.

3. - For completion, generate readiness code ⇒ Page ST-50 .

On Board Diagnostic (OBD), technical data

Equipment of Engine Control Module (ECM) ⇒ Page ST-3

Equipment of Transmission Control Module (TCM) ⇒ Page ST-4

Selectable diagnostic modes under address word 33 - OBD ⇒ Page ST-5 .

ST-3

Engine Control Module (ECM) equipment

Engine Code	**AAA**
System identification	Motronic M5.9
Terminals at Engine Control Module (ECM)	68
Emissions limiting values according to	Tier 1[1)]
On Board Diagnostic (OBD)	OBD II
DTC memory	Permanent memory[2)]
Memory for adaptation values	Temporary memory[3)]
Oxygen sensor control	2 sensors
Knock sensor control	2 knock sensors
Intake manifold change-over	No
Camshaft adjustment	No
Exhaust Gas Recirculation (EGR) system	No
Boost pressure regulation	No
Secondary Air Injection (AIR) system	Yes
Electronic engine power control (EPC)	No

1) Tier 1 = Non-Low Emission Vehicles (emission values max. 0.25 g/mi HC)

2) Independent of voltage supply.

3) Values are lost when voltage supply is interrupted.

Equipment of Transmission Control Module (TCM)

Transmission code	**CLB, DLL**
System identification	01M
Terminals at Transmission Control Module (TCM)	68
On Board Diagnostic (OBD)	OBD II
DTC memory	Permanent memory[1)]
Memory for adaptation values	No

[1)] Independent of voltage supply.

Selectable diagnostic modes under address word 33 - OBD

Note:

The conditions required for selecting the desired diagnostic mode are listed in the following table:

Diagnostic mode			Requirement:		
Selectable diagnostic modes under address word 33 - OBD			• Engine off • Ignition switched on	• Engine running at idle	• Vehicle in drive mode
Mode 1:	Check measured values	⇒ Page ST-14	Yes	Yes	Yes
Mode 2:	Check operating conditions	⇒ Page ST-18	Yes	Yes	Yes
Mode 3:	Check DTC Memory	⇒ Page ST-21	Yes[1)]	Yes	Yes
Mode 4:	Reset/erase diagnostic data	⇒ Page ST-25	Yes	Yes	Yes
Mode 5:	Check oxygen test results[2)]	⇒ Page ST-27	Yes	Yes	Yes
Mode 6:	Check test results of components that are not continuously monitored[2)]	⇒ Page ST-33	No	Yes	Yes

[1)] Perform only with ignition switched on when engine does not start (operate starter beforehand for at least 6 seconds).

[2)] Can only be selected with Module number 10 - Engine Electronics.

Diagnostic mode			Requirement:		
Selectable diagnostic modes under address word 33 - OBD			• engine off • Ignition switched on	• Engine running at idle	• Vehicle in drive mode
Mode 7:	Check test results of components that are continuously monitored	⇒ Page ST-41	Yes[1)]	Yes	Yes
Mode 8:	Tank leak test[2)]	⇒ Page ST-43	No	Yes	No
Mode 9:	Vehicle information	Cannot be selected			

[1)] Perform only with ignition switched on when engine does not start (operate starter beforehand for at least 6 seconds).

[2)] Can only be selected with Module number 10 - Engine Electronics.

ST-7

Diagnostic tester, connecting

Recommended special tools and equipment

- VAS5052 Vehicle Diagnostic and Information System with
- VAS 5052/3 diagnostic cable

Requirements

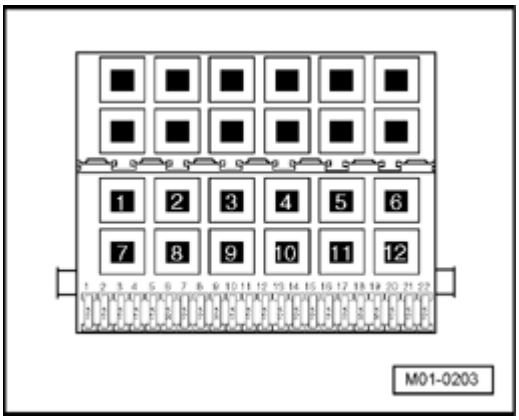

- The respective fuses of the Motronic fuel injection and ignition system must be OK:

⇒ *Electrical Wiring Diagrams, Troubleshooting & Component Locations*

- Battery voltage must be at least 11.5 Volts.
- All electrical consumers such as, lights and rear window defroster must be switched off.

- Parking brake must be engaged or else daylight driving lights will be switched on.
- For vehicles with automatic transmission, selector lever must be in -P- or -N-.
- If vehicle is equipped with an A/C system, it must be switched off.
- Ground (GND) connections between engine, transmission, and chassis must be OK.
- Ignition switched off.

Work procedure

Connect diagnostic tester (VAS 5052) using (VAS 5052/3) diagnostic cable as follows:

- Unclip cover for Data Link Connector.

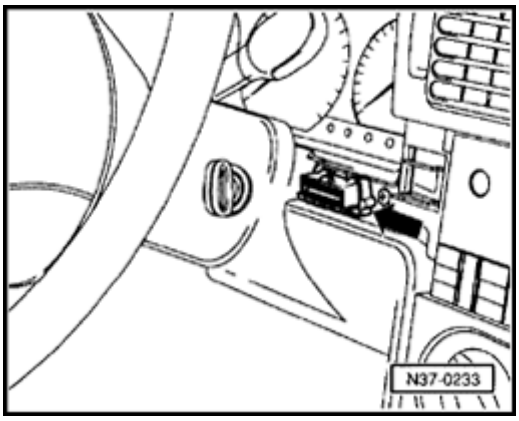

- Connect diagnostic cable connector to Data Link Connector (DLC) (arrow).

- Depending on the desired diagnostic mode, it is necessary to:switch on ignition or start engine ⇒ Page ST-5 , selectable diagnostic modes under address word 33.

Note:

- *Respective operation of the diagnostic tester:*

⇒ *Operating instructions of the diagnostic tester*

- *If no display appears on diagnostic tester, check voltage supply at Diagnostic Link Connector (DLC):*

⇒ *Electrical Wiring Diagrams, Troubleshooting & Component Locations*

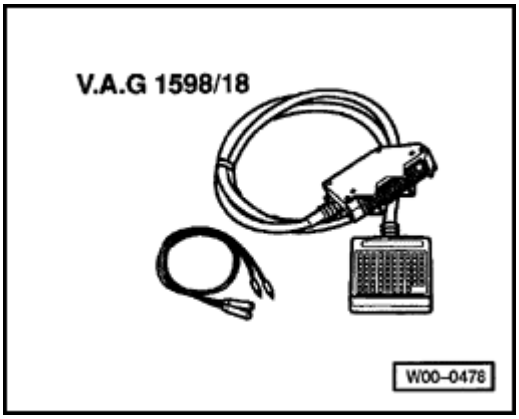

Test box, connecting for wiring test

Recommended special tools and equipment

- V.A.G 1598/18 Test box (for Engine- and Transmission Control Module)

Requirement

- Ignition switched off.

Work procedure for Engine Control Module (ECM) ⇒ Page ST-11

Work procedure for Transmission Control Module (TCM) ⇒ Page ST-12

ST-11

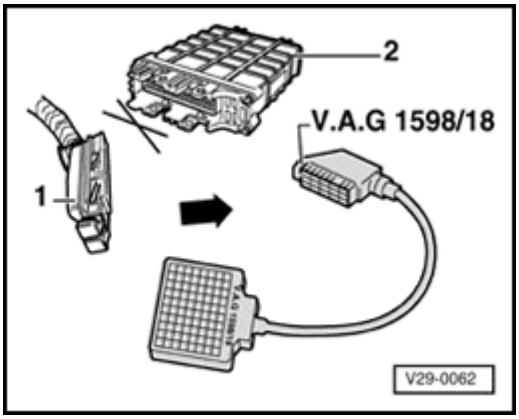

Work procedure for Engine Control Module (ECM)

- Disengage and disconnect connector -1- from Engine Control Module (ECM) -2-.
- Connect V.A.G 1598/18 test box to control module wiring harness (arrow).

When harness connector is disconnected from the Engine Control Module (ECM) or the battery is disconnected, all adaptation values in the control module are erased. DTC memory content will remain intact however. If the engine is started after this, rough, uneven idle can result. In this case, the readiness code must be generated again ⇒ Page ST-50 .

Work procedure for Transmission Control Module (TCM)

Note:

Transmission Control Module (TCM) is installed under the rear seat bench.

- Disengage connector from control module and then disconnect.

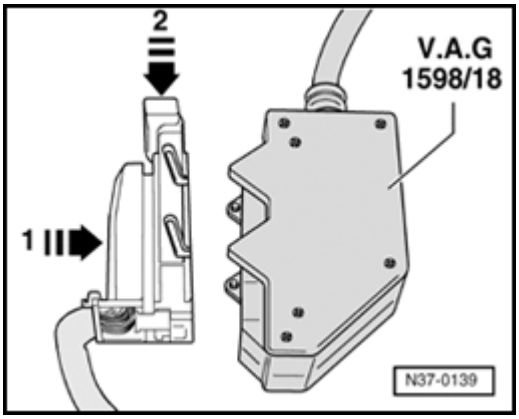

- Connect test box (V.A.G 1598/18) to control module wiring harness (arrow -1-) and engage (arrow -2-).

When harness connector is disconnected from Transmission Control Module (TCM) or the battery is disconnected, all adaptation values in the control module are erased. In this case, the readiness code must be generated again ⇒ Page ST-50 .

Diagnostic function, selecting

Recommended special tools and equipment e.g.:

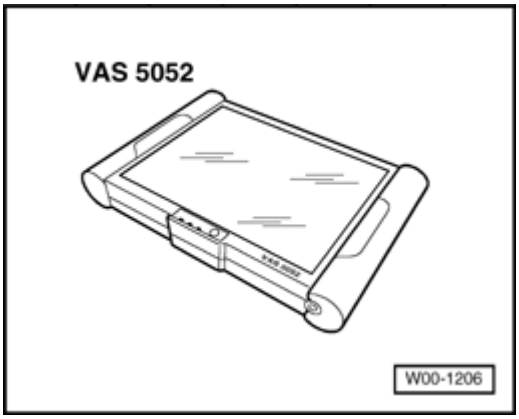

- VAS 5052 Vehicle Diagnostic and Information System with
- VAS 5052/3 diagnostic cable

Address word 33 - On-Board Diagnostic (OBD)

Function

Under "address word 33 - On-Board Diagnostic (OBD)", various diagnostic modes for Engine Control Module (ECM) and Transmission Control Module -TCM- (in vehicles with automatic transmission) can be selected via diagnostic tester.

The following diagnostic modes monitor all components and systems which influence the emission quality.

Note:

- *Engine Control Module (ECM) reports with module number 10 - Engine Electronics.*
- *Transmission Control Module -TCM- (on vehicles with automatic transmission) reports with module number 1A - Transmission Electronics.*

Diagnostic mode 1: Check measured values

Function

In this diagnostic mode, all emissions-relevant measured values are displayed.

Requirement

- Coolant temperature must be at least 80 ° C ⇒ PID 05, Coolant temperature.

Work procedure

- Connect diagnostic tester ⇒ Page ST-7 .

- Depending on the desired operating condition: switch on ignition or start engine and let run at idle.

- Under address word 33, select "Diagnostic mode 1: Checking measured values."

- Select desired measured values "PID XX".

Note:

- *The specified values for the measuring values can be found under the respective component- and function tests.*

- *The following list only serves as an overview.*

- *The measuring values are sorted according to the PID (parameter-identifications).*

PID	Display measuring values	Mode number 10 Engine electronics	Mode number 1A Transmission Electronics
01:	Monitoring status since erasing DTC memory	X	X
02:	DTC	X	---
03:	Condition of the fuel system	X	---
04:	Calculated load condition value	X	---
05:	Coolant temperature	X	X
06:	Short time gasoline-air ratio bank 1	X	---
07:	Gasoline-air ratio bank 1	X	---
10:	Fuel pressure	X	---
11:	Intake manifold pressure	X	---
12:	Engine rotations per minute (RPM)	X	X

ST-16

PID	Diagnostic mode	mode number 10 Engine electronics	mode number 1A Transmission Electronics
13:	Vehicle speed	X	X
14:	Valve timing adjustment at 1. cyl. to "advance"	X	---
15:	Intake Air Temperature (IAT)	X	---
16:	Air flow quantity at Mass Air Flow (MAF) sensor	X	---
17:	Throttle valve position (absolute)	X	X
18:	Availability status of secondary air	X	---
19:	Available oxygen B1 to B2-S1 to S4 ♦ present or not present	X	---
20:	Bank 1 - sensor 1	X	---
21:	Bank 1 - sensor 2	X	---
28:	OBD requirement for which this vehicle is designed	X	X

If DTCs are displayed in "PID 02":

- Repair stored malfunctions according to DTC table:
  - SAE P0xxx-DTCs ⇒ Page ST-54 ,
  - SAE P1xxx-DTCs ⇒ Page ST-66 .

Note:

- *The DTC table is sorted by SAE code.*
- *Emission -relevant malfunctions are additionally indicated in the instrument cluster via the Malfunction Indicator Lamp (MIL).*
- *Erase DTC memory after repairing malfunction ⇒ Page ST-25 , Diagnostic mode 4: Reset/erase diagnostic data.*

- End diagnosis and switch ignition off.

Diagnostic mode 2: Check operating conditions

Function

This diagnostic mode displays the operating requirements at which an emission-relevant malfunction was detected and stored by the Engine Control Module (ECM) or Transmission Control Module (TCM).

Work procedure

- Connect diagnostic tester ⇒ Page ST-7 .
- Depending on desired operating condition: switch on ignition or start engine and let run at idle.
- Under address word 33, select "Diagnostic mode 2: Check operating conditions."
- Select the desired operating condition "PID XX".

Note:

- *The following list only serves as an overview.*
- *The operating conditions are sorted by the PID (parameter-identifications).*

PID	Display operating conditions	Mode number 10 Engine electronics	Mode number 1A Transmission Electronics
02:	DTC which triggered the current reception of all control module information	X	X
03:	Condition of the fuel system	X	---
04:	Calculated load condition value	X	X
05:	Coolant temperature	X	X
06:	Short time gasoline-air ratio bank 1	X	---
07:	Gasoline-air ratio bank 1	X	---
10:	Fuel pressure	X	---
11:	Intake manifold pressure	X	---
12:	Engine rotations per minute	X	X
13:	Vehicle speed	X	X

If DTCs are displayed in "PID 02":

- Repair stored malfunctions according to DTC table:

  - SAE P0xxx-DTCs ⇒ Page ST-54 ,

  - SAE P1xxx-DTCs ⇒ Page ST-66 .

Note:

- *The DTC table is sorted by SAE code.*

- *Emission -relevant malfunctions are indicated in the instrument cluster via the Malfunction Indicator Lamp (MIL).*

- *Erase DTC memory after repairing malfunction ⇒ Page ST-25 , Diagnostic mode 4: Reset/erase diagnostic data.*

- End diagnosis and switch ignition off.

ST-21

Diagnostic mode 3: Check DTC Memory

Function

This diagnostic mode indicates all stored DTCs of components and systems which are emission relevant.

Malfunction Indicator Lamp (MIL) in instrument cluster lights up for a DTC entry.

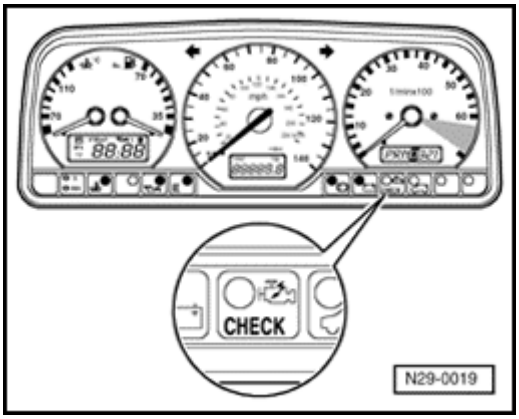

Component location of Malfunction Indicator Lamp (MIL)

SAE Diagnostic Trouble Codes (DTCs)

The DTC always consists of a 5-digit alpha-numeric value with the following meaning:

Component group:	
P x x x x	DTC for drivetrain
Norm-Code:	
P 0 x x x	DTCs defined by SAE with specified malfunction texts
P 1 x x x	additional emission relevant DTCs provided by manufacturer

System group:	
P x 0 x x	Fuel and air mixture and additional emission regulations
P x 1 x x	Fuel and air ratio
P x 2 x x	Fuel and air ratio
P x 3 x x	Ignition system
P x 4 x x	Additional exhaust regulation
P x 5 x x	Speed and idle control
P x 6 x x	Control module and output signals
P x 7 x x	Transmission
P x 8 x x	Transmission

Work procedure

- Connect diagnostic tester ⇒ Page ST-7 .

- Start engine and let run at idle.

Note:

Only if engine does not start:

- Operate starter for approx. 6 seconds. Do not switch ignition off afterward.

- Under address word 33, select "Diagnostic mode 3: Check DTC memory."

  The number of stored malfunctions or "0 malfunctions detected" is displayed.

- End diagnosis and switch ignition off.

- Repair stored malfunctions according to DTC table:

  - SAE P0xxx-DTCs ⇒ Page ST-54 ,

  - SAE P1xxx-DTCs ⇒ Page ST-66 ,

Note:

- *The DTC table is sorted by SAE code.*

- *Emission -relevant malfunctions are additionally indicated in the instrument cluster via the Malfunction Indicator Lamp (MIL).*

- *In Diagnostic mode 2, it can be determined at which operating condition a malfunction was detected and stored by the Engine Control Module (ECM) ⇒ Page ST-18 , Diagnostic mode 2: Checking operating conditions.*

- *Erase DTC memory after repairing malfunction ⇒ Page ST-25 , Diagnostic mode 4: Reset/erase diagnostic data.*

Display example:

P0444 Evaporative Emission (EVAP) Canister Purge Regulator Valve Open

Explanation:

- P0444 = SAE diagnostic trouble code (malfunction identification number).
- Evaporative Emission (EVAP) Canister Purge Regulator Valve -N80- Open = malfunctioning wiring path or malfunctioning component.
- Open circuit = Malfunction type as text

Diagnostic mode 4: Reset/erase diagnostic data

Function

This diagnostic mode performs the following functions:

- All emission relevant malfunctions in DTC memory will be erased,
- The operating conditions at which a malfunction was stored will be reset ⇒ Page ST-18 , Diagnostic mode 2: Operating conditions,
- All adaptation values are being reset,
- All test results of the diagnostic functions are being reset.

Requirement

- DTC memory was checked ⇒ Page ST-21 , Diagnostic mode 3: Check DTC memory.

Work procedure

- Connect diagnostic tester ⇒ Page ST-7 .
- Start engine and let run at idle.
- Under address word 33, select "Diagnostic mode 4: Reset/erase diagnostic data.

ST-26

Erased or reset:

- Number and content of the DTC memories,
- Operating conditions,
- Adaptation values,
- Test results.

- End diagnosis and switch ignition off.

- Generate readiness code ⇒ Page ST-50 .

Diagnostic mode 5: Check output of oxygen sensor signals

Note:

This diagnostic mode can only be selected with Module number 10 - Engine Electronics.

Function

The static values of the oxygen sensors are indicated via this diagnostic mode.

The values of the individual oxygen sensor test results must reach the specified value or must be within the min.- and max.- limits.

Requirements

- Exhaust system must be properly sealed between catalytic converter and cylinder head.
- There must not be any DTCs stored in DTC memory ⇒ Page ST-21 , Diagnostic mode 3: Check DTC memory.
- Coolant temperature must be at least 80 ° C ⇒ Page ST-14 , Diagnostic mode 1: Check measured values; PID 05, Coolant temperature.

Work procedure

- Connect diagnostic tester ⇒ Page ST-7 .

- Start engine and let run at idle.

- Under address word 33, select "Diagnostic mode 5: Check output of oxygen sensor signals".

- Select desired output of oxygen sensor signals "Test-ID XX".

Note:

- *When selecting the diagnostic mode, the entry is always performed in Bank 1 sensor 1 .*

- *If either the V.A.G 1551/1552 Scan Tool (ST) or the VAS5051/5052 Vehicle Diagnostic, Testing and Information System is used for checking the output of oxygen sensor signals, the respective oxygen sensor can be selected by pressing buttons 1 and 2:*

  - - Button 1 Bank 1 sensor 1,

  - - Button 2 Bank 1 sensor 2,

Test-ID:	Evaluation of output of oxygen sensor signals	
07	Bank 1, sensor 1 and 2: Minimum voltage at sensor for test cycle	⇒ Page ST-30
08	Bank 1, sensor 1 and 2: Maximum voltage at sensor for test cycle	⇒ Page ST-31
09	Bank 1, sensor 1: Time period between sensor shift procedures	⇒ Page ST-32

- End diagnosis and switch ignition off.

ST-30

Evaluation test-ID 07 Bank 1, sensor 1 and 2: Minimum voltage at sensor for test cycle

Oxygen sensor	Specified value:	
	min.	max.
Bank 1 sensor 1	0.005 V	0.400 V
Bank 1 sensor 2	0.005 V	0.400 V

If specified value is exceeded:

- Oxygen sensor not ready for operation.

- Oxygen sensor heater faulty:

- Check oxygen sensor heater for Oxygen Sensor (O2S) before Three Way Catalytic Converter (TWC) ⇒ Page 24-27 .

- Check oxygen sensor heater for Oxygen Sensor (O2S) behind Three Way Catalytic Converter (TWC) ⇒ Page 24-30 .

- Short circuit to B+ or open circuit in wiring in oxygen sensor or in wire:

- Check Oxygen Sensor (O2S) and oxygen sensor control before Three Way Catalytic Converter (TWC) ⇒ Page 24-86 .

- Check Oxygen Sensor (O2S) and oxygen sensor control behind Three Way Catalytic Converter (TWC) ⇒ Page 24-91 .

ST-31

Evaluation test-ID 08 Bank 1 sensor 1 and 2: Maximum voltage at sensor for test cycle

Oxygen sensor	Specified value:	
	min.	max.
Bank 1 sensor 1	0.500 V	0.950 V
Bank 1 sensor 2	0.500 V	0.950 V

If the specified value is not reached:

- Oxygen sensor not ready for operation.

- Oxygen sensor heater faulty:

- Check oxygen sensor heater for Oxygen Sensor (O2S) before Three Way Catalytic Converter (TWC) ⇒ Page 24-27 .

- Check oxygen sensor heater for Oxygen Sensor (O2S) behind Three Way Catalytic Converter (TWC) ⇒ Page 24-30 .

- Short circuit to Ground (GND) or open circuit in wiring in oxygen sensor or in wire:

- Check Oxygen Sensor (O2S) and oxygen sensor control before Three Way Catalytic Converter (TWC) ⇒ Page 24-86 .

- Check Oxygen Sensor (O2S) and oxygen sensor control behind Three Way Catalytic Converter (TWC) ⇒ Page 24-91 .

If the specified value is exceeded:

- Short circuit to B+ in oxygen sensor or in wire:

- Check Oxygen Sensor (O2S) and oxygen sensor control before Three Way Catalytic Converter (TWC) ⇒ Page 24-86 .

- Check Oxygen Sensor (O2S) and oxygen sensor control behind Three Way Catalytic Converter (TWC) ⇒ Page 24-91 .

Evaluation test-ID 09: Bank 1, sensor 1: Time period between sensor shift procedures

Oxygen sensor	Specified value:	
	min.	max.
Bank 1 sensor 1	0/s	10/s

If the specified value is exceeded:

- Oxygen sensor faulty:

- Check Oxygen Sensor (O2S) and oxygen sensor control before Three Way Catalytic Converter (TWC) ⇒ Page 24-86 .

Diagnostic mode 6: Check test results of components that are not continuously monitored

Note:

This diagnostic mode can only be selected with Module number 10 - Engine Electronics.

Function

This diagnostic mode displays the test results of emission relevant components and systems which are not continuously monitored.

The values of the individual test results must reach the specified value or must be within the min.- and max.- limits.

Test-ID	Components	Test
01:	Catalytic converter	⇒ Page ST-34
03:	Secondary Air Injection (AIR) system	⇒ Page ST-36
05:	Tank ventilation system	⇒ Page ST-38

Test-ID 01: Catalytic converter

Requirements

- There must not be any DTCs stored in DTC memory ⇒ Page ST-21 , Diagnostic mode 3: Check DTC memory.

- Coolant temperature must be at least 80 ° C ⇒ Page ST-14 , Diagnostic mode 1: Check measured values; PID 05, Coolant temperature.

Work procedure

- Read readiness code ⇒ Page ST-48 .

- Let engine run at idle.

- Under address word 33, select "Diagnostic mode 6: Check test results of components that are not continuously monitored".

- Select the "Test-ID 01: Catalytic converter" off.

- Check specified values at idle.

Evaluation test-ID 01: Catalytic converter monitoring

	Specified value:	
	min.	**max.**
Aging value	---	2.00

- End diagnosis and switch ignition off.

If specified values are not obtained:

- Replace catalytic converter ⇒ Page 26-5 , item 7 .

- Erase DTC memory of Engine Control Module (ECM) ⇒ Page ST-25 , Diagnostic mode 4: Reset/erase diagnostic data.

- Generate readiness code ⇒ Page ST-50 .

Test-ID 03: Secondary Air Injection (AIR) system

Requirements

- There must not be any DTCs stored in DTC memory ⇒ Page ST-21 , Diagnostic mode 3: Check DTC memory.
- Intake air temperature 5 to 60 ° C ⇒ Page ST-14 , Diagnostic mode 1: Check measured values; PID 15: Intake Air Temperature (IAT)
- Coolant temperature approx. intake air temperature (5 to 60 ° C) ⇒ Page ST-14 , Diagnostic mode 1: Check measured values; PID 05, Coolant temperature.

Work procedure

- Read readiness code ⇒ Page ST-48 .
- Let engine run at idle.
- Under address word 33, select "Diagnostic mode 6: Check test results of components that are not continuously monitored".
- Select the "Test-ID 03: Secondary Air Injection (AIR) system"
- Check specified values at idle.

Evaluation test-ID 03: Secondary Air Injection (AIR) system

	Specified value:	
	min.	**max.**
♦ Reduced secondary air mass	32.0	---

- End diagnosis and switch ignition off.

If specified values are not obtained:

- Check secondary air system for proper seal ⇒ Page 26-17 .

- Check Secondary Air Injection (AIR) Pump Motor -V101- ⇒ Page 26-22 .

- Check combination valve ⇒ Page 26-27 .

- Erase DTC memory of Engine Control Module (ECM) ⇒ Page ST-25 , Diagnostic mode 4: Reset/erase diagnostic data.

- Generate readiness code ⇒ Page ST-50 .

Test-ID 05: Tank ventilation system

Requirements

- There must not be any DTCs stored in DTC memory ⇒ Page ST-21 , Diagnostic mode 3: Check DTC memory.

- Coolant temperature must be at least 80 ° C ⇒ Page ST-14 , Diagnostic mode 1: Check measured values; PID 05, Coolant temperature.

Work procedure

- Read readiness code ⇒ Page ST-48 .

- Let engine run at idle.

- Under address word 33, select "Diagnostic mode 6: Check test results of components that are not continuously monitored".

- Select the "Test-ID 05: Tank ventilation system".

- Check specified values at idle.

Evaluation test-ID 05: Tank ventilation system

a) Evaporative Emission (EVAP) Canister Purge Regulator Valve -N80-	Specified value:	
	min.	max.
Active test: ♦ Deviation of oxygen sensor control in direction "lean" ♦ Can only check OK, short test	---	246.0
Active test: ♦ Deviation of oxygen sensor control in direction "rich" ♦ Can only check OK, short test	10.0	---
Active test: ♦ Air balance at idle OK, also short test	1229.0	---

b) Tank leak	Specified value:	
	min.	max.
Opening time	160.0	---

- End diagnosis and switch ignition off.

If specified values are not obtained:

- Check Evaporative Emission (EVAP) Canister Purge Regulator Valve -N80- ⇒ Page 20-43 .

Vehicles without Leak Detection Pump (LDP)

- Fuel tank ventilation, checking ⇒ Page 20-36 .

Vehicles with Leak Detection Pump (LDP)

- EVAP canister system, checking for proper seal ⇒ Page 20-40 .

- Leak Detection Pump (LDP) -V144-, checking ⇒ Page 20-46 .

Continued for all vehicles

- Erase DTC memory of Engine Control Module (ECM) ⇒ Page ST-25 , Diagnostic mode 4: Reset/erase diagnostic data.

- Generate readiness code ⇒ Page ST-50 .

Diagnostic mode 7: Check test results

Function

This diagnostic mode indicates all stored DTCs of components and systems which are continuously monitored.

- Exhaust Malfunction Indicator Lamp (MIL) is still activated in instrument cluster.
- A malfunction was stored in diagnostic mode 7, however this malfunction is not yet displayed in "Diagnostic mode 3: Check DTC memory".

Requirement

- There must not be any DTCs stored in DTC memory ⇒ Page ST-21 , Diagnostic mode 3: Check DTC memory.

Work procedure

- Connect diagnostic tester ⇒ Page ST-7 .

- Start engine and let run at idle.

Note:

Only if engine does not start:

- Operate starter for approx. 6 seconds. Do not switch ignition off afterward.

- Under address word 33, select "Diagnostic mode 7: Check test results of components that are continuously monitored".

  The number of stored malfunctions or "0 malfunctions detected" is displayed.

- End diagnosis and switch ignition off.

- Repair stored malfunctions according to DTC table:

  - SAE P0xxx-DTCs ⇒ Page ST-54 ,

  - SAE P1xxx-DTCs ⇒ Page ST-66 .

Note:

- *The DTC table is sorted by SAE code.*

- *Erase DTC memory after repairing malfunction ⇒ Page ST-25 , Diagnostic mode 4: Reset/erase diagnostic data.*

Diagnostic mode 8: Tank leak test

Note:

This diagnostic mode can only be selected with Module number 10 - Engine Electronics.

Function

This diagnostic mode checks fuel system for leaks.

Note:

- *The Evaporative Emission (EVAP) Canister Purge Regulator Valve -N80- and Leak detection pump (LDP) -V144- (in vehicles with Leak detection pump) seal the tank system.*
- *Using engine leak detection spray (e.g.: G 001 800 A1) leaks can be detected.*

Test requirements

- There must not be any DTCs stored in DTC memory ⇒ Page ST-21 , Diagnostic mode 3: Check DTC memory.
- Coolant temperature must be 80 to 110 ° C ⇒ Page ST-14 , Diagnostic mode 1: Check measured values; PID 05, Coolant temperature.
- Intake air temperature must not be above the maximum of 60 ° C ⇒ Page ST-14 , Diagnostic mode 1: Check measuring values; PID 15, Intake air temperature.

Function test

- Connect diagnostic tester ⇒ Page ST-7 .
- Start engine and let run at idle for at least 15 minutes.
- Under address word 33, select "Diagnostic mode 8: Tank leak test".
- Measuring value "Test-ID 01: select Tank leak test".
- Check specified value of tank leak test at idle.

Evaluation test-ID 01: Tank leak test

Test function:	Specified value:
♦ Is being initiated, please wait ♦ Aborted ♦ Active ♦ Off	Test function active

Note:

- *During tank leak test, Engine Control Module (ECM) limits test function active to approx. 12 minutes.*
- *If the accelerator pedal is depressed during the test, the test will be aborted.*
- *To repeat the tank leak test, switch ignition off and start engine again and let run at idle for at least 15 minutes.*

- End diagnosis and switch ignition off.

If a leak is detected:

- Check Evaporative Emission (EVAP) Canister Purge Regulator Valve -N80- ⇒ Page 20-43 .

Vehicles without Leak Detection Pump (LDP)

- Fuel tank ventilation, checking ⇒ Page 20-36 .

Vehicles with Leak Detection Pump (LDP)

- EVAP canister system, checking for proper seal ⇒ Page 20-40 .

- Leak Detection Pump (LDP) -V144-, checking ⇒ Page 20-46 .

Continued for all vehicles

- Erase DTC memory of Engine Control Module (ECM) ⇒ Page ST-25 , Diagnostic mode 4: Reset/erase diagnostic data.

- Generate readiness code ⇒ Page ST-50 .

Readiness code

Function

The readiness code is an 8 digit number block that indicates the results of an emission relevant On Board Diagnostic (OBD).

When the diagnostic for a system (e.g.: secondary air system) has run through successfully, the respective digit of the number block is set from 1 to 0.

On Board Diagnostics are performed at regular intervals during normal vehicle operation. After repairing an exhaust relevant system, the readiness code should be generated via a road test to ensure that these systems are working according to specifications. If a malfunction is recognized during diagnostic check, it is stored in DTC memory.

The readiness code is erased every time DTC memory is erased or when voltage supply is interrupted. DTC memory should therefore only be erased when there are DTCs stored.

Readiness code, reading

Requirements

- There must not be any DTCs stored in DTC memory ⇒ Page ST-21 , Diagnostic mode 3: Check DTC memory.

- Coolant temperature must be at least 80 ° C ⇒ Page ST-14 , Diagnostic mode 1: Check measured values; PID 05, Coolant temperature.

Work procedure

- Connect diagnostic tester ⇒ Page ST-7 .

- Start engine and let run at idle.

- Under address word 33, select "Diagnostic mode 1: Checking measured values."

- Select desired measuring value "PID 01".

- Observe the right 8-digit number block:

  If all diagnoses have run through successfully, the 8-digit number block

  Specified value: 00000000 must be displayed.

Evaluation PID 01: System status-information (right 8-digit number block:)

Meaning if display position = 0								
1	2	3	4	5	6	7	8	Diagnostic function
0								Exhaust gas recirculation OK • not available/always "0"
	0							Oxygen sensor heater OK
		0						Oxygen sensors OK
			0					A/C system OK • not available/always "0"
				0				Secondary Air Injection (AIR) system OK
					0			EVAP canister system (tank ventilation system) OK
						0		Catalytic converter heater OK • not available/always "0"
							0	Catalytic converter OK

If a 1 is displayed instead of a 0 in the 8-digit number block:

- Generate readiness code ⇒ Page ST-50 .

ST-50

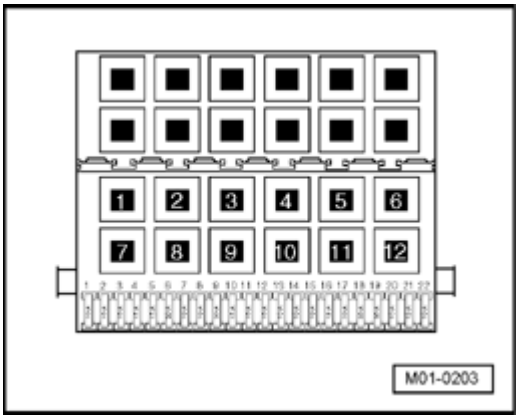

Readiness code, generating

Requirements

- The respective fuses of the Motronic fuel injection and ignition system must be OK:

⇒ *Electrical Wiring Diagrams, Troubleshooting & Component Locations*

- Battery voltage must be at least 11.5 Volts.
- All electrical consumers such as, lights and rear window defroster must be switched off.
- If vehicle is equipped with an A/C system, it must be switched off.
- Parking brake must be engaged or else daylight driving lights will be switched on.
- Ground (GND) connections between engine, transmission, and chassis must be OK.
- There must not be any DTCs stored in DTC memory ⇒ Page ST-21 , Diagnostic mode 3: Check DTC memory.
- Intake air temperature 5 to 60 ° C ⇒ Page ST-14 , Diagnostic mode 1: Check measured values; PID 15: Intake Air Temperature (IAT)

Work procedure

- Connect diagnostic tester ⇒ Page ST-7 .

- Turn ignition on for 30 seconds.

- Start engine and let run at idle.

Check fuel tank ventilation.

- Increase engine speed for 90 seconds to 3000 to 3500 RPM to warm up catalytic converter.

Note:

Engine speed ⇒ Page ST-14 , Diagnostic mode 1: Check measured values PID 12, engine rotations per minute (RPM).

Testing Secondary Air Injection (AIR) system for proper seal.

- Let engine run at idle for 1 minute.

Testing oxygen sensors for aging.

- Increase engine speed to 2200 to 3300 RPM for 3 minutes.

Testing oxygen sensors in partial throttle range

- Perform a road test.

  The following operating conditions must be met during this road test:

  - Drive for 15 minutes in 3. gear or in driving mode "3" on a level driving surface at a constant vehicle speed with an engine speed of 2000 to 2800 RPM.

Observe the safety precautions that apply to road tests ⇒ Page 24-22 .

Note:

- *Vehicle speed ⇒ Page ST-14 , Diagnostic mode 1: Check measuring values PID 13, Vehicle speed.*

- *Engine speed ⇒ Page ST-14 , Diagnostic mode 1: Check measuring values PID 12, engine rotations per minute (RPM).*

- Accelerate vehicle uniformly, not at Wide Open Throttle (WOT).

  - Avoid coasting operation (throttle valve closed) while driving.

- After 15 minutes, downshift until an engine speed of 2800 to 3500 RPM has been reached.

- Drive in deceleration mode at an engine speed up to approx. 1800 RPM.

- Park vehicle and let engine run at idle for 15 minutes.

  ♦ Accelerator pedal must not be operated during this time.

- Read readiness code ⇒ Page ST-48 .

In 8-digit number block:

♦ Display position 5: Secondary Air Injection (AIR) system

and/or

♦ Display position 6: EVAP canister system

a 1 instead of 0 is displayed:

- Repeat complete work procedure ⇒ Page ST-51

DTC tables

SAE P0xxx-DTCs

Fuel and air ratio

SAE-DTC	DTC text	Corrective action
P0102	Mass or Volume Air Flow Circuit Low Input	- Check Mass Air Flow (MAF) Sensor -G70- ⇒ Page 24-33 - Check intake system for leaks (false air) ⇒ Page 24-83
P0103	Mass or Volume Air Flow Circuit High Input	
P0112	Intake Air Temperature Sensor 1 Circuit Low[1)]	- Check Intake Air Temperature (IAT) Sensor -G72- ⇒ Page 24-55
P0113	Intake Air Temperature Sensor 1 Circuit High[2)]	

[1)] The correct DTC text is: Intake Air Temperature Sensor 1 Circuit Low

[2)] The correct DTC text is: Intake Air Temperature Sensor 1 Circuit High

ST-55

SAE-DTC	DTC text	Corrective action
P0116	Engine Coolant Temperature Circuit Range/Performance	- Check Engine Coolant Temperature (ECT) Sensor -G62- ⇒ Page 24-46 - Check coolant regulator: ⇒ *Repair Manual, 2.8 Liter VR6 2V Engine Mechanical, Engine Code(s): AAA, Repair Group 19 removing and installing cooling system components disassembling and assembling coolant regulator housing*
P0117	Engine Coolant Temperature Circuit Low	
P0118	Engine Coolant Temperature Circuit High	
P0120	Throttle/Pedal Position Sensor/Switch "A" Circuit	- Check Throttle Valve Control Module -J338- ⇒ Page 24-38
P0121	Throttle/Pedal Position Sensor/Switch "A" Circuit Range/Performance	
P0122	Throttle/Pedal Position Sensor/Switch "A" Circuit Low	
P0125	Insufficient Coolant Temperature for Closed Loop Fuel Control	- Let engine run at idle until coolant temperature for oxygen sensor control has been reached

SAE-DTC	DTC text	Corrective action
P0131	O2 Sensor Circuit Low Voltage, Bank 1 Sensor 1	- Check oxygen sensor and oxygen sensor control before catalytic converter ⇒ Page 24-86
P0132	O2 Sensor Circuit High Voltage, Bank 1 Sensor 1	
P0133	O2 Sensor Circuit Slow Response, Bank 1 Sensor 1	
P0134	O2 Sensor Circuit No Activity Detected, Bank 1 Sensor 1	
P0135	O2 Sensor Heater Circuit, Bank 1 Sensor 1	- Check oxygen sensor heater for oxygen sensor before catalytic converter ⇒ Page 24-27
P0137	O2 Sensor Circuit Low Voltage, Bank 1 Sensor 2	- Check oxygen sensor and oxygen sensor control behind catalytic converter ⇒ Page 24-91
P0138	O2 Sensor Circuit High Voltage, Bank 1 Sensor 2	
P0140	O2 Sensor Circuit No Activity Detected, Bank 1 Sensor 2	
P0141	O2 Sensor Heater Circuit, Bank 1 Sensor 2	- Check oxygen sensor heater for oxygen sensor behind catalytic converter ⇒ Page 24-30

SAE-DTC	DTC text	Corrective action
P0171	System Too Lean, Bank 1	- Check fuel pressure regulator and residual pressure ⇒ Page 24-78 - Check Cylinder 1 Fuel Injector -N30- to Cylinder 4 Fuel Injector -N33-, Cylinder 5 Fuel Injector -N83-, Cylinder 6 Fuel Injector -N84- ⇒ Page 24-65 - Check intake system for leaks (false air) ⇒ Page 24-83 - Check Fuel Pump (FP) -G6- ⇒ Page 20-15 - Check exhaust system for proper seal ⇒ Page 26-1 , removing and installing exhaust system components - Check Secondary Air Injection (AIR) system for proper seal ⇒ Page 26-17 - Check vacuum lines for leaks

SAE-DTC	DTC text	Corrective action
P0172	System Too Rich, Bank 1	- Check fuel pressure regulator and residual pressure ⇒ Page 24-78 - Check Cylinder 1 Fuel Injector -N30- to Cylinder 4 Fuel Injector -N33-, Cylinder 5 Fuel Injector -N83-, Cylinder 6 Fuel Injector -N84- ⇒ Page 24-65 - Check oxygen sensor and oxygen sensor control before catalytic converter ⇒ Page 24-86 - Check oxygen sensor and oxygen sensor control behind catalytic converter ⇒ Page 24-91 - Check Evaporative Emission (EVAP) Canister Purge Regulator Valve -N80- ⇒ Page 20-43

Ignition system

SAE-DTC	DTC text	Corrective action
P0300	Random/Multiple Cylinder Misfire Detected	- Check Cylinder 1 Fuel Injector -N30- to Cylinder 4 Fuel Injector -N33-, Cylinder 5 Fuel Injector -N83-, Cylinder 6 Fuel Injector -N84- ⇒ Page 24-65 - Check spark plugs ⇒ Page 28-8 , test data, spark plugs - Check Ignition Coil -N152- ⇒ Page 28-18
P0301	Cylinder 1 Misfire Detected	
P0302	Cylinder 2 Misfire Detected	
P0303	Cylinder 3 Misfire Detected	
P0304	Cylinder 4 Misfire Detected	
P0305	Cylinder 5 Misfire Detected	
P0306	Cylinder 6 Misfire Detected	
P0321	Ignition/Distributor Engine Speed Input Circuit Range/Performance	- Check Engine Speed (RPM) Sensor -G28- ⇒ Page 24-62
P0322	Ignition/Distributor Engine Speed Input Circuit No Signal	
P0327	Knock Sensor 1 Circuit Low, Bank 1 or Single Sensor	- Check Knock Sensor (KS) 1 -G61- and Knock Sensor (KS) 2 -G66- ⇒ Page 28-13 - Loosen knock sensor and tighten again to 20 Nm
P0332	Knock Sensor 2 Circuit Low, Bank 2	
P0341	Camshaft Position Sensor "Intake" Circuit Range/Performance, Bank 1 or Single Sensor	- Check Camshaft Position (CMP) Sensor -G40- ⇒ Page 28-9

Additional emission regulations

SAE-DTC	DTC text	Corrective action
P0411	Secondary Air Injection System Incorrect Flow Detected	- Check Secondary Air Injection (AIR) Pump Motor -V101- ⇒ Page 26-22 - Check Secondary Air Injection (AIR) Solenoid Valve -N112- ⇒ Page 26-19 - Check Secondary Air Injection (AIR) system for proper seal ⇒ Page 26-17
P0422	Main Catalyst Efficiency Below Threshold, Bank 1	- Check oxygen sensor and oxygen sensor control before catalytic converter ⇒ Page 24-86 - Check oxygen sensor and oxygen sensor control behind catalytic converter ⇒ Page 24-91 - Check catalytic converter ⇒ Page 26-10
P0440	Evaporative Emission System	- Check Evaporative Emission (EVAP) Canister Purge Regulator Valve -N80- ⇒ Page 20-43 - Check fuel tank ventilation (vehicles without Leak detection pump) ⇒ Page 20-36 - Check EVAP canister system for proper seal (vehicles with Leak detection pump) ⇒ Page 20-40
P0441	Evaporative Emission System Incorrect Purge Flow	
P0442	Evaporative Emission System Leak Detected (small leak)	
P0455	Evaporative Emission System Leak Detected (large leak)	

Speed and idle control

SAE-DTC	DTC text	Corrective action
P0501	Vehicle Speed Sensor "A" Range/Performance	- Check vehicle speed signal ⇒ Page 24-102
P0506	Idle Air Control System RPM Lower Than Expected	- Check Throttle Valve Control Module -J338- ⇒ Page 24-38
P0507	Idle Air Control System RPM Higher Than Expected	
P0510	Closed Throttle Position Switch	

Control module and output signals

SAE-DTC	DTC text	Corrective action
P0605	Internal Control Module Read Only Memory (ROM) Error	
	♦ With module number 10 - Engine Electronics	- Replace Motronic Engine Control Module (ECM) -J220- ⇒ Page 24-101
	♦ With module number 1A - Transmission Electronics	- Replace Transmission Control Module (TCM) -J217- ⇒ Page 38-28
P0614	ECM / TCM Incompatible	- Replace Transmission Control Module (TCM) -J217- ⇒ Page 38-28

Transmission

SAE-DTC	DTC text	Corrective action
P0700	Transmission Control System (MIL Request)	- Replace Transmission Control Module (TCM) -J217- ⇒ Page 38-28
P0705	Transmission Range Sensor Circuit Malfunction (PRNDL Input)	- Check Multi-Function Transmission Range (TR) Switch -F125- ⇒ Page 38-10
P0715	Input/Turbine Speed Sensor "A" Circuit[1)]	- Check Transmission Vehicle Speed Sensor (VSS) -G38- ⇒ Page 38-13
P0722	Output Speed Sensor Circuit No Signal[2)]	- Check Vehicle Speed Sensor (VSS) -G68- ⇒ Page 38-16
P0725	Engine Speed Input Circuit	- Check wire connection between Motronic Engine Control Module (ECM) -J220- and Transmission Control Module (TCM) -J217- according to wiring diagram: ⇒ *Electrical Wiring Diagrams, Troubleshooting &Component Locations* - Check Engine Speed (RPM) Sensor -G28- ⇒ Page 24-62

[1)] The correct DTC text is: Input/Turbine Speed Sensor "A" Circuit

[2)] The correct DTC text is: Output Speed Sensor Circuit No Signal

SAE-DTC	DTC text	Corrective action
P0730	Incorrect Gear Ratio	- Check ATF level: ⇒ *Repair Manual, 4 Spd. Automatic Transmission 01M, Repair Group 37 checking ATF level and topping off* - Check Solenoid Valve 1 -N88- to Solenoid Valve 7 -N94- ⇒ Page 38-22 , checking solenoid valves in valve body - Check Transmission Vehicle Speed Sensor (VSS) -G38- ⇒ Page 38-13 - Check Vehicle Speed Sensor (VSS) -G68- ⇒ Page 38-16 - Mechanical malfunction in transmission
P0731	1. Gear 1 Incorrect Ratio	
P0732	2. Gear 2 Incorrect Ratio	
P0733	3. Gear 3 Incorrect Ratio	
P0734	4. Gear 4 Incorrect Ratio	
P0740	Torque Converter Clutch Circuit/Open	- Check ATF level: ⇒ *Repair Manual, 4 Spd. Automatic Transmission 01M, Repair Group 37 checking ATF level and topping off* - Mechanical malfunction in transmission

SAE-DTC	DTC text	Corrective action
P0748	Pressure Control Solenoid "A" Electrical	- Check Solenoid Valve 6 -N93- ⇒ Page 38-22 , checking solenoid valves in valve body
P0753	Shift Solenoid "A" Electrical	- Check Solenoid Valve 1 -N88- ⇒ Page 38-22 , checking solenoid valves in valve body
P0758	Shift Solenoid "B" Electrical	- Check Solenoid Valve 2 -N89- ⇒ Page 38-22 , checking solenoid valves in valve body
P0763	Shift Solenoid "C" Electrical	- Check Solenoid Valve 3 -N90- ⇒ Page 38-22 , checking solenoid valves in valve body
P0768	Shift Solenoid "D" Electrical	- Check Solenoid Valve 4 -N91- ⇒ Page 38-22 , checking solenoid valves in valve body
P0773	Shift Solenoid "E" Electrical	- Check Solenoid Valve 5 -N92- ⇒ Page 38-22 , checking solenoid valves in valve body
P0785	Shift/Timing Solenoid	- Check solenoid valves ⇒ Page 38-22 , checking solenoid valves in valve body

Transmission

SAE-DTC	DTC text	Corrective action
P0811	Excessive Clutch Slippage	- Check ATF level: ⇒ *Repair Manual, 4 Spd. Automatic Transmission 01M, Repair Group 37 checking ATF level and topping off* - Check Solenoid Valve 3 -N90- ⇒ Page 38-22 , checking solenoid valves in valve body - Check Solenoid Valve 5 -N92- ⇒ Page 38-22 , checking solenoid valves in valve body - Mechanical malfunction in transmission

SAE P1xxx-DTCs

Fuel and air ratio

SAE-DTC	DTC text	Corrective action
P1127	Bank1, mixture adaption (mult.) system too rich	- Check fuel pressure regulator and residual pressure ⇒ Page 24-78 - Check Cylinder 1 Fuel Injector -N30- to Cylinder 4 Fuel Injector -N33-, Cylinder 5 Fuel Injector -N83-, Cylinder 6 Fuel Injector -N84- ⇒ Page 24-65 - Check oxygen sensor and oxygen sensor control before catalytic converter ⇒ Page 24-86 - Check oxygen sensor and oxygen sensor control behind catalytic converter ⇒ Page 24-91 - Check Evaporative Emission (EVAP) Canister Purge Regulator Valve -N80- ⇒ Page 20-43

SAE-DTC	DTC text	Corrective action
P1128	Bank 1, mixture adaption (mult.) system too lean	- Check fuel pressure regulator and residual pressure ⇒ Page 24-78 - Check Cylinder 1 Fuel Injector -N30- to Cylinder 4 Fuel Injector -N33-, Cylinder 5 Fuel Injector -N83-, Cylinder 6 Fuel Injector -N84- ⇒ Page 24-65 - Check intake system for leaks (false air) ⇒ Page 24-83 - Check Fuel Pump (FP) -G6- ⇒ Page 20-15 - Check exhaust system for proper seal ⇒ Page 26-1 , removing and installing exhaust system components - Check Secondary Air Injection (AIR) system for proper seal ⇒ Page 26-17 - Check vacuum lines for leaks

SAE-DTC	DTC text	Corrective action
P1176	Bank 1, Lambda correction downstream of catalyst control limit reached	- Check oxygen sensor and oxygen sensor control before catalytic converter ⇒ Page 24-86 - Check oxygen sensor and oxygen sensor control behind catalytic converter ⇒ Page 24-91 - Check intake system for leaks (false air) ⇒ Page 24-83

Fuel and air ratio

SAE-DTC	DTC text	Corrective action
P1213	Cylinder 1 Injector Circuit High	- Check Cylinder 1 Fuel Injector -N30- to Cylinder 4 Fuel Injector -N33-, Cylinder 5 Fuel Injector -N83-, Cylinder 6 Fuel Injector -N84- ⇒ Page 24-65
P1214	Cylinder 2 Injector Circuit High	
P1215	Cylinder 3 Injector Circuit High	
P1216	Cylinder 4 Injector Circuit High	
P1217	Cylinder 5 Fuel Injector -N83- Short circuit to B+	
P1218	Cylinder 6 Fuel Injector -N84- Short circuit to B+	

SAE-DTC	DTC text	Corrective action
P1225	Cylinder 1 Injector Circuit, Low	- Check Cylinder 1 Fuel Injector -N30- to Cylinder 4 Fuel Injector -N33-, Cylinder 5 Fuel Injector -N83-, Cylinder 6 Fuel Injector -N84- ⇒ Page 24-65
P1226	Cylinder 2 Injector Circuit, Low	
P1227	Cylinder 3 Injector Circuit, Low	
P1228	Cylinder 4 Injector Circuit, Low	
P1229	Cylinder 5 Fuel Injector -N83- Short circuit to Ground (GND)	
P1230	Cylinder 6 Fuel Injector -N84- Short circuit to Ground (GND)	
P1237	Cylinder 1 injector -N30- open circuit	
P1238	Cylinder 2 injector -N31- open circuit	
P1239	Cylinder 3 injector -N32- open circuit	
P1240	Cylinder 4 injector -N33- open circuit	
P1241	Cylinder 5 injector -N83- open circuit	
P1242	Cylinder 6 injector -N84- open circuit	

Ignition system

SAE-DTC	DTC text	Corrective action
P1300	Misfire Detected, Low Fuel	- Fuel filling level less than 2 gallons, fill fuel tank with fuel - Check signal from Sender for fuel gauge -G-: ⇒ *Electrical Wiring Diagrams, Troubleshooting &Component Locations* - Check wire connection between Engine Control Module (ECM) and instrument cluster according to wiring diagram: ⇒ *Electrical Wiring Diagrams, Troubleshooting &Component Locations*
P1340	Camshaft Position Sensor -G40-, Engine Speed Sensor -G28- incorrect allocation	- Check Camshaft Position (CMP) Sensor -G40- and Camshaft Position (CMP) Sensor 2 -G163- ⇒ Page 28-9 - Check Engine Speed (RPM) Sensor -G28- ⇒ Page 24-62

Additional emission regulations

SAE-DTC	DTC text	Corrective action
P1410	Evaporative Emission (EVAP) Canister Purge Regulator Valve -N80- Short circuit to B+	- Check Evaporative Emission (EVAP) Canister Purge Regulator Valve -N80- ⇒ Page 20-43
P1420	Secondary Air Injection System Switching Valve (A) Circuit Malfunction	- Check Secondary Air Injection (AIR) Solenoid Valve -N112- ⇒ Page 26-19
P1421	Secondary Air Injection (AIR) Solenoid Valve -N112- Short circuit to Ground (GND)	
P1422	Secondary Air Injection (AIR) Solenoid Valve -N112- Short circuit to B+	
P1425	Evaporative Emission (EVAP) Canister Purge Regulator Valve -N80- Short circuit to Ground (GND)	- Check Evaporative Emission (EVAP) Canister Purge Regulator Valve -N80- ⇒ Page 20-43
P1426	Evaporative Emission System Purge Control Valve Circuit Open	

SAE-DTC	DTC text	Corrective action
P1450	Secondary Air Injection System Short circuit to B+	- Check activation of Secondary Air Injection (AIR) Pump Relay -J299- according to wiring diagram: ⇒ *Electrical Wiring Diagrams, Troubleshooting &Component Locations*
P1451	Secondary Air Injection System Short circuit to Ground (GND)	
P1452	Secondary air system open circuit	
P1471	EVAP Emission Control LPD Circuit Short circuit to B+	- Check Leak detection pump (LDP) -V144- ⇒ Page 20-46 - Check EVAP canister system for proper seal (vehicles with Leak detection pump) ⇒ Page 20-40
P1472	EVAP Emission Control LPD Circuit Short circuit to Ground (GND)	
P1473	Leak diagnosis pump - tank breather system open circuit	
P1475	Leak diagnosis pump - tank breather system malfunction/no signal	
P1476	Leak diagnosis pump - tank breather system malfunction/vacuum to low	
P1477	Leak diagnosis pump - tank breather system malfunction	
P1478	Leak diagnosis pump - tank breather system blocked pipe detected	

Speed and idle control

SAE-DTC	DTC text	Corrective action
P1500	Fuel Pump Primary Circuit Fault in electrical circuit	- Check activation of Fuel Pump (FP) Relay -J17- according to wiring diagram: ⇒ *Electrical Wiring Diagrams, Troubleshooting &Component Locations*
P1501	Fuel Pump (FP) Relay -J17- Short circuit to Ground (GND)	
P1502	Fuel Pump (FP) Relay -J17- Short circuit to B+	
P1541	Fuel Pump (FP) Relay -J17- open circuit	
P1542	Angle sender 1 for throttle valve drive - G187- implausible signal	- Check Throttle Valve Control Module -J338- ⇒ Page 24-38
P1543	Angle sender 1 for throttle valve drive - G187- signal too low	
P1544	Angle sender 1 for throttle valve drive - G187- signal too high	
P1580	Throttle valve drive - bank 1 malfunction	

SAE-DTC	DTC text	Corrective action
P1582	Idling speed regulation adaption limit reached	- Check fuel pressure regulator and residual pressure ⇒ Page 24-78 - Check intake system for leaks (false air) ⇒ Page 24-83 - Check Cylinder 1 Fuel Injector -N30- to Cylinder 4 Fuel Injector -N33-, Cylinder 5 Fuel Injector -N83-, Cylinder 6 Fuel Injector -N84- ⇒ Page 24-65 - Check Evaporative Emission (EVAP) Canister Purge Regulator Valve -N80- ⇒ Page 20-43 - Check exhaust system for proper seal ⇒ Page 26-1 , removing and installing exhaust system components - Check Secondary Air Injection (AIR) system for proper seal ⇒ Page 26-17 - Check vacuum lines for leaks

Control module and output signals

SAE-DTC	DTC text	Corrective action
P1611	Request MIL on Short circuit to Ground (GND)	- Check activation of Malfunction Indicator Lamp (MIL) -K83- according to wiring diagram: ⇒ *Electrical Wiring Diagrams, Troubleshooting &Component Locations*
P1613	Request MIL on Open circuit/short circuit to B+	

Transmission

SAE-DTC	DTC text	Corrective action
P1778	Valve 7 electrical fault in circuit	- Check Solenoid Valve 7 -N94- ⇒ Page 38-22 , checking solenoid valves in valve body
P1780	Torque retraction malfunctioning	- Check ATF level: ⇒ *Repair Manual, 4 Spd. Automatic Transmission 01M, Repair Group 37 checking ATF level and topping off*
		- Mechanical malfunction in transmission

Transmission

SAE-DTC	DTC text	Corrective action
P1850	Data-bus-drivetrain missing message from engine control module	- Eliminate malfunction in CAN-Bus wires or in other CAN-Bus components according to wiring diagram: ⇒ *Electrical Wiring Diagrams, Troubleshooting &Component Locations*
P1854	Data-Bus-driving gear Hardware faulty	
P1855	Data-Bus-driving gear Software version monitoring	
P1857	Load signal fault signal from engine control unit	
P1866	Data-Bus-driving gear missing messages	

Volkswagen Passat

Official Factory Repair Manual

1995, 1996, 1997
Gasoline, Turbo Diesel, TDI
4-cylinder and VR6, including wagon

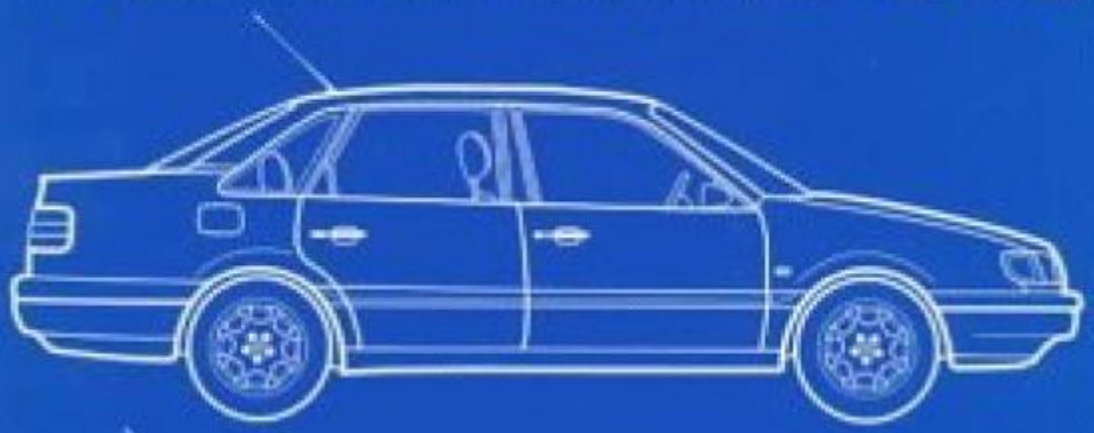

Robert Bentley

PASSAT '95 - '97

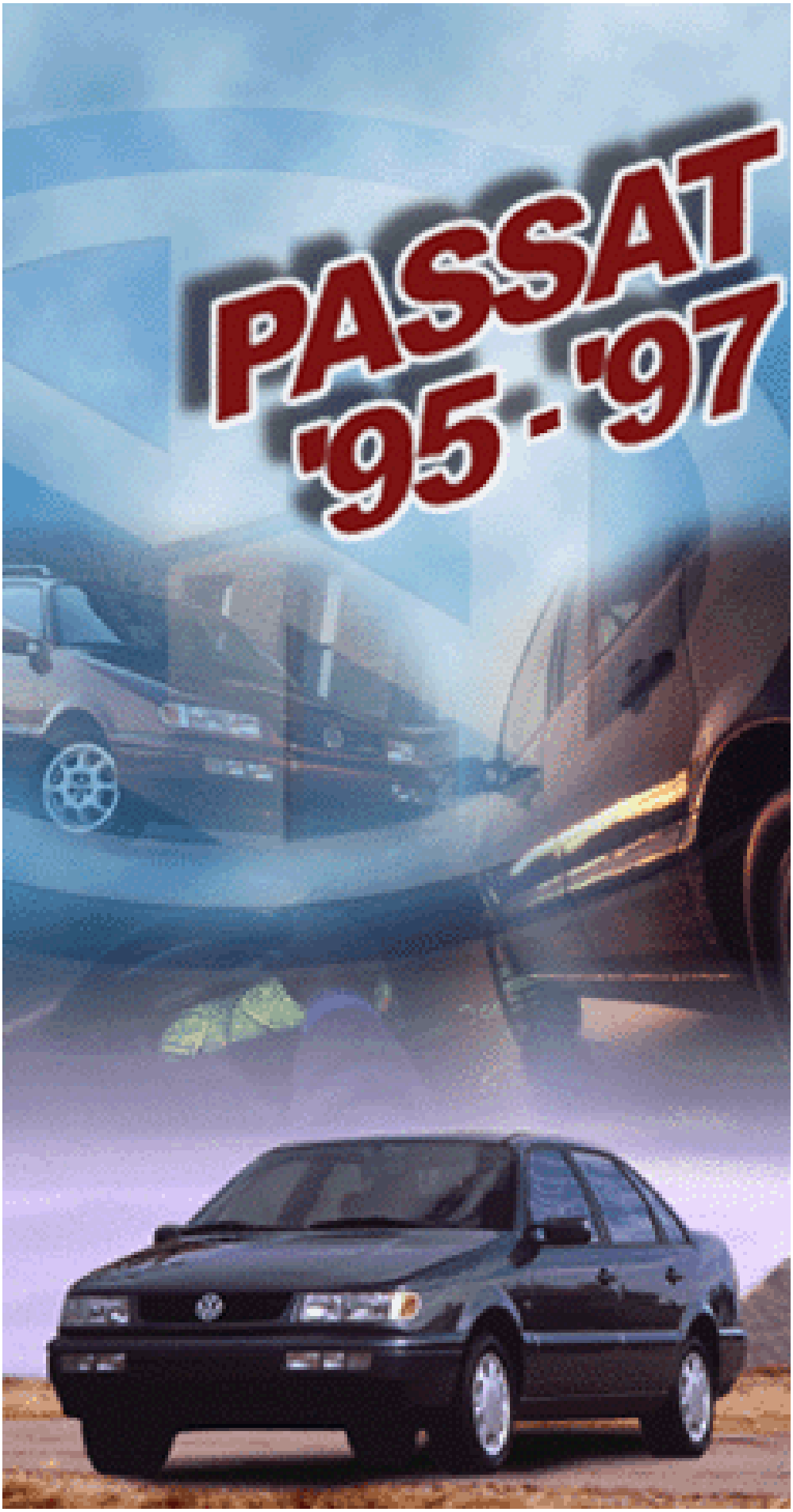

5 Spd. Manual Transmission 02A

00 - General, Technical data

Transmission identification
Code letters, engine/transmission applications, ratios, capacities

Transmission layout

Calculating overall ratio (i)

General repair instructions

30 - Clutch

Clutch actuating mechanism
Assembly overview - Pedal cluster
Over-center spring, removing and installing
Clutch pedal, removing and installing
Assembly overview - Clutch hydraulic system
Master cylinder, removing and installing
Clutch hydraulic system, bleeding

Servicing clutch release mechanism

Clutch, servicing

34 - Manual Transmission - Controls, Housing

Gear selector mechanism, servicing
Installation position
Gear selector control cables, removing and installing
Gear selector lever and relay lever, installation position
Gear selector housing, removing and installing
Shift lever, removing and installing
Gear selector mechanism, adjusting
Transmission, removing and installing (vehicles with 4-cylinder engine)
Transmission, removing and installing (vehicles with 6-cylinder engine)
Transmission oil level, checking

Transmission disassembly and assembly, overview
Transmission housing cover and 5th gear, removing/installing
Transmission housing and selector mechanism, disassembling and assembling

Input shaft, output shaft, differential and shift forks, removing and installing
Transmission, disassembling/assembling

Transmission housing and clutch housing, servicing

Selector shaft, disassembling and assembling

Shift forks, disassembling and assembling

35 - Manual Transmission - Gears, Shafts

Input shaft, disassembling and assembling

Input shaft, adjusting
Table of adjustment shims
Checking adjustment

Output shaft, disassembling/ assembling

Output shaft, adjusting

Reverse idler shaft, disassembling and assembling

39 - Final drive, Differential

Axle flange oil seal, replacing
Transmissions without springs behind axle flanges
Transmissions with springs behind axle flanges

Differential, assembly

Adjustment overview

Differential, adjusting

Transmission identification

The 5-speed manual transmission 02A is installed in Passat vehicles equipped with 2.0 liter 4-cylinder or 2.8 liter VR6 6-cylinder engines.

Engine/transmission applications ⇒ Page 00-3 .

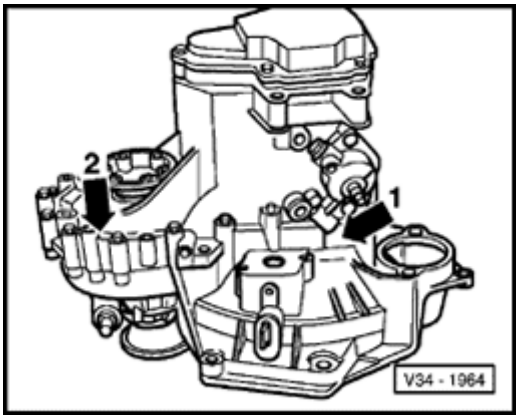

Location on transmission

Code letters and date of manufacture (arrow 1)

Manual transmission type 02A (arrow -2-)

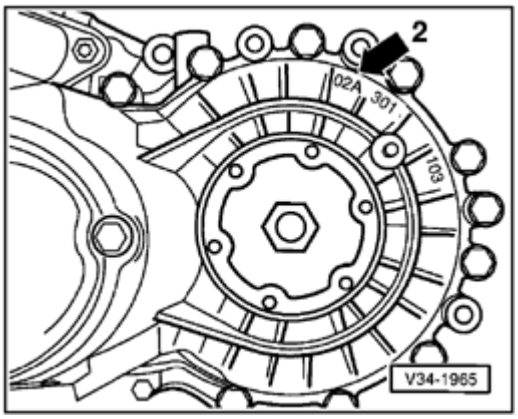

Manual transmission 02A (arrow 2)

00-2

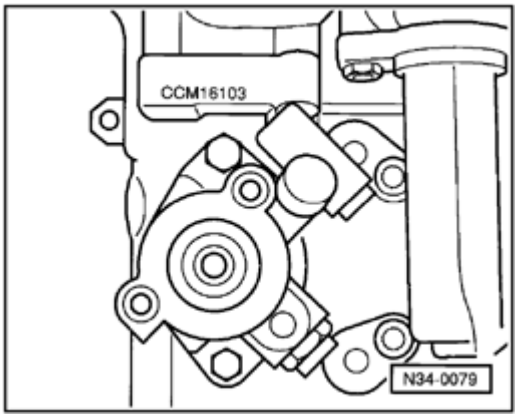

Code letters and date of manufacture of transmission

Example:	CCM	16	10	3
	I	I	I	I
	I	I	I	I
	Code letters	Day	Month	Year of manufacture (1993)

Additional data depends on manufacture.

Note:

The transmission code letters are also shown on the vehicle identification plates.

00-3

Code letters, engine/transmission applications, ratios, capacities

Manual transmission		5 speed 02A		
Code letters		CCM	CHA	CNL
Manufactured	From To	08.93	08.93	08.93
Allocation	Type	Passat 1995 ➢	Passat 1995 ➢	Passat 1995 ➢
	Engine	2.8 ltr. 128 kW (172 hp) VR6 injection engine	1.9 ltr. 55 kW (75 hp) 4 cyl. Turbo-Diesel	1.9 ltr. 55 kW (75 hp) 4 cyl. Turbo-Diesel 2.0 ltr. 85 Kw (115 hp) 4 cyl.
Ratio: 2 : 1	Final drive	61 : 18 = 3.389	71 : 18 = 3.944	70 : 19 = 3.684
	1st gear	33 : 10 = 3.300	34 : 9 = 3.778	34 : 9 = 3.778
	2nd gear	35 : 18 = 1.944	36 : 17 = 2.118	36 : 17 = 2.118
	3rd gear	34 : 26 = 1.308	34 : 25 = 1.360	35 : 24 = 1.458
	4th gear	30 : 29 = 1.034	33 : 36 = 0.917	35 : 34 = 1.029
	5th gear	31 : 37 = 0.838	33 : 46 = 0.717	36 : 43 = 0.837
	6th gear	-	-	-
	Reverse gear	18 : 9 x 36 : 20 = 3.600	18 : 9 x 36 : 20 = 3.600	18 : 9 x 36 : 20 = 3.600
	Speedometer drive	13 : 22 = 0.591	13 : 22 = 0.591	13 : 22 = 0.591

Code letters	CCM	CHA	CNL
Capacity	2.0 liter (2.1 qt)		
Specification	Gear oil G50 SAE 75W90 (synthetic oil)		
Clutch control	hydraulic	hydraulic	hydraulic
Clutch plate ∅	228 mm	215 mm	228 mm
Drive shaft flange ∅	100 mm		
Overall ratio in top gear	2.840	2.828	3.084 1)
1) Pressure spring behind flange shaft ⇒ Page 39-7			

00-5

Manual transmission		5 speed 02A		
Code letters		CHU	CRU	CTN
Manufactured	From	08.93	01.94	01.94
	To			
Allocation	Type	Passat 1996 ➢	Passat 1995 ➢	Passat 1995 ➢
	Engine	1.9 ltr. 66 kW (88 hp) 4 cyl. Turbo-Diesel	2.0 ltr.4 cyl. 85 Kw (115 hp) 4 cyl.	2.0 ltr. 85 Kw (115 hp) 4 cyl.
Ratio: $_2$: $_1$	Final drive	60 : 18 = 3.158	72 : 17 = 4.235	60 : 19 = 3.158
	1st gear	34 : 9 = 3.778	33 : 10 = 3.300	34 : 9 = 3.778
	2nd gear	36 : 17 = 2.118	35 : 18 = 1.944	36 : 17 = 2.118
	3rd gear	34 : 25 = 1.360	34 : 26 = 1.308	34 : 25 = 1.360
	4th gear	34 : 35 = 0.971	34 : 35 = 0.971	34 : 35 = 0.971
	5th gear	34 : 45 = 0.756	34 : 45 = 0.756	34 : 45 = 0.756
	6th gear	-	-	-
	Reverse gear	18 : 9 x 36 : 20 = 3.600	17 : 10 x 36 : 20 = 3.060	18 : 9 x 36 : 20 = 3.600
	Speedometer drive	13 : 22 = 0.591	13 : 22 = 0.591	13 : 22 = 0.591

Code letters	CHU	CRU	CTN
Capacity	2.0 liter (2.1 qt)		
Specification	Gear oil G50 SAE 75W90 (synthetic oil)		
Clutch control	hydraulic	hydraulic	hydraulic
Clutch plate ∅	228 mm	228 mm	228 mm
Drive shaft flange ∅	100 mm		
Overall ratio in top gear	2.387	3.202	2.387

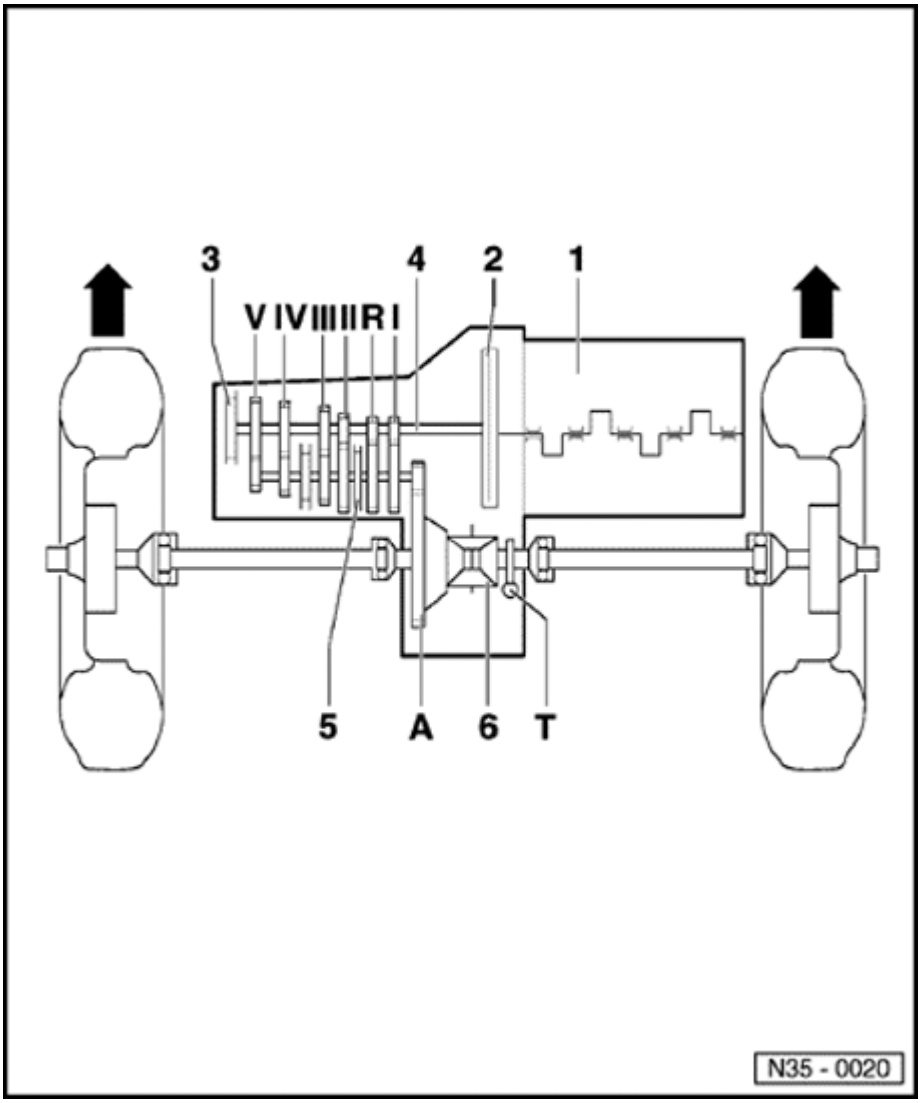

Transmission layout

Designation

- **1 - Engine**
- **2 - Clutch**
- **3 - Transmission**
- **4 - Input shaft**
- **5 - Output shaft/pinion shaft**
- **6 - Differential**

Arrows point in direction of travel

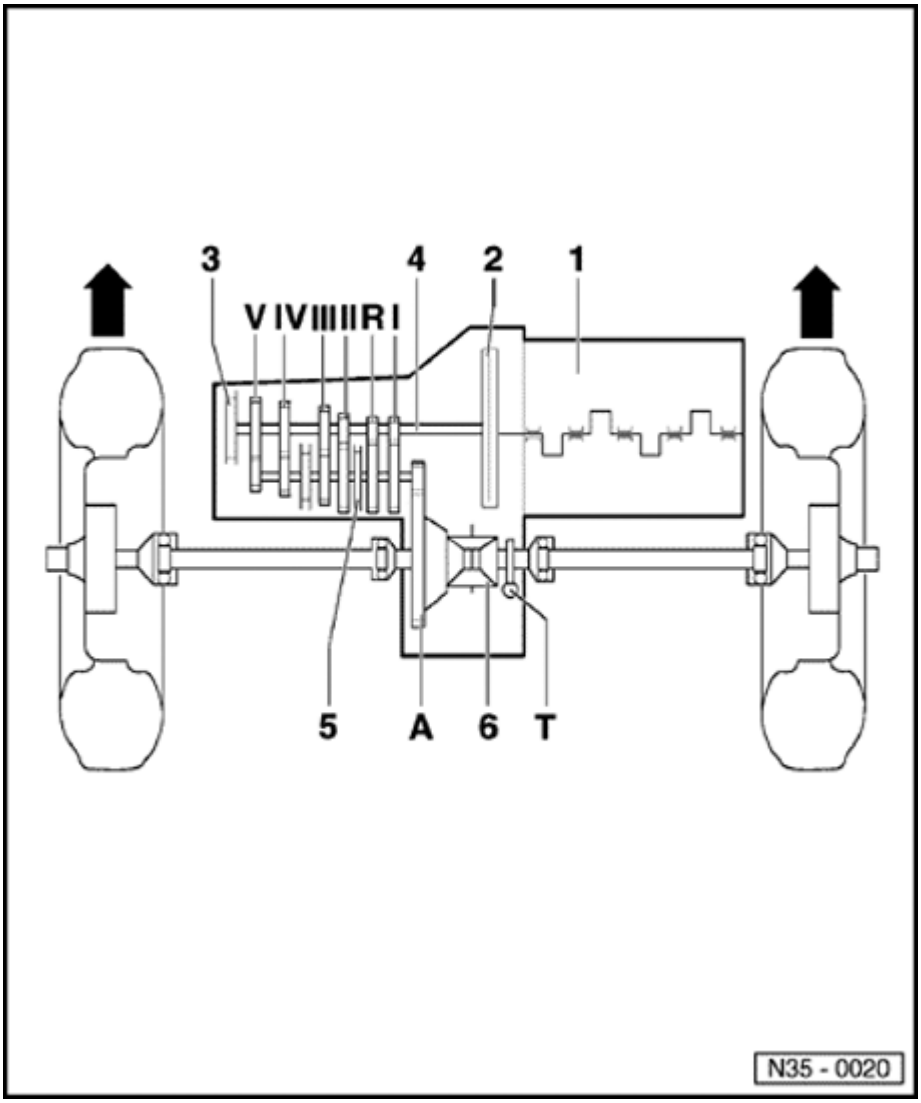

Gear ratios

I	-	1st gear
II	-	2nd gear
III	-	3rd gear
IV	-	4th gear
V	-	5th gear
R	-	Reverse gear
A	-	Final drive
T	-	Speedometer drive

Arrows point in direction of travel

Calculating overall ratio (i)

Example:

	5th gear	Final drive
Drive gear	$ZG_1 = 37$	$ZA_1 = 18$
Driven gear	$ZG_2 = 31$	$ZA_2 = 61$

$i = Z_2 : Z_1$ [1)]

i_G = Gear ratio = $ZG_2 : ZG_1 = 31 : 37 = 0.838$

i_A = Axle ratio = $ZA_2 : ZA_1 = 61 : 18 = 3.389$

Overall ratio = total ratio = $i_G \times i_A = 0.838 \times 3.389 = 2.840$

[1)] Z_1 = No. of teeth drive gear; Z_2 = No. of teeth driven gear

General repair instructions

Accurate and successful transmission repairs require:

- Care and cleanliness
- Proper tools, in good working order
- Observation of basic safety rules

A number of valid general instructions for various repair procedures are summarized here. They apply to this Repair Manual.

Transmission

- While installing the transmission, be sure that the dowel pins for aligning the engine and transmission are properly located.
- After replacing the transmission, top up with gear oil to the lower edge of the filler hole.
- Capacities and specifications ⇒ Page 00-3 .

Notes:

If the oil level is topped up with the transmission installed in the vehicle, carry out the oil level check as follows:

- Raise vehicle so that all wheels are off the ground. Fill transmission with oil to the lower edge of the filler hole and refit filler plug. Start engine, engage a gear and allow the transmission to turn for approx. 2 minutes. Switch off engine and again top-up oil to lower edge of filler hole.

Gaskets, seals

- Thoroughly clean joint surfaces and apply sealant AMV 188 200 03.
- Apply sealant uniformly but not too thick.
- Always replace O-rings
- Before installing radial shaft seals: pack space between sealing lips with grease, and apply light film of oil around outer diameter.
- After installing: check gear oil level. Top off if necessary, up to lower edge of filler hole.

Capacities and specification ⇒ Page 00-3 .

Circlips

- Always replace
- Do not overstretch circlips.
- Circlips must be fully seated in the groove

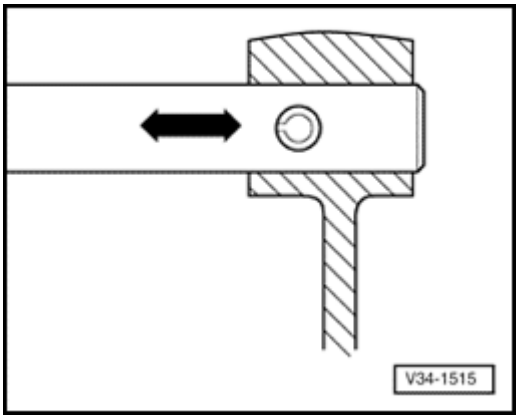

Spring pins

- Always replace spring pins. Installation position: slot longitudinal to line of force.

Bolts and nuts

- Tighten and loosen bolts and nuts for securing covers and housings in a diagonal sequence.
- Especially delicate parts, such as clutch pressure plates, must not be distorted. Loosen and tighten bolts and nuts in stages in a diagonal sequence.
- Tightening torques as specified are for unoiled bolts and nuts.
- Always replace self-locking bolts and nuts.

Bearings

- Install needle bearings with lettered side (thicker metal) towards fitting tool.
- Lubricate all transmission bearings with gear oil before installing. Lubricate with special care when measuring turning torque.
- Tapered roller bearings fitted to one shaft must be renewed as a set. Use same make of bearings if possible!
- Heat inner races to approx. 100 °C before installing.
- Do not interchange outer and inner races of bearings of the same size, bearings are paired.

Shims

- Measure shims at several points with a micrometer. Tolerance variations make it possible to find the exact shim thickness required.
- Check for burrs and damage.
- Only install shims that are in perfect condition.

Synchronizer rings

- Do not interchange.
- When re-using always fit to the same gear.
- Check for wear and replace if necessary.
- Coat with gear oil before installing.

Gears

- Before installing clean and heat on a hot plate to approx. 100 ° C.
- Temperature can be checked with temperature tester V.A.G 1558.

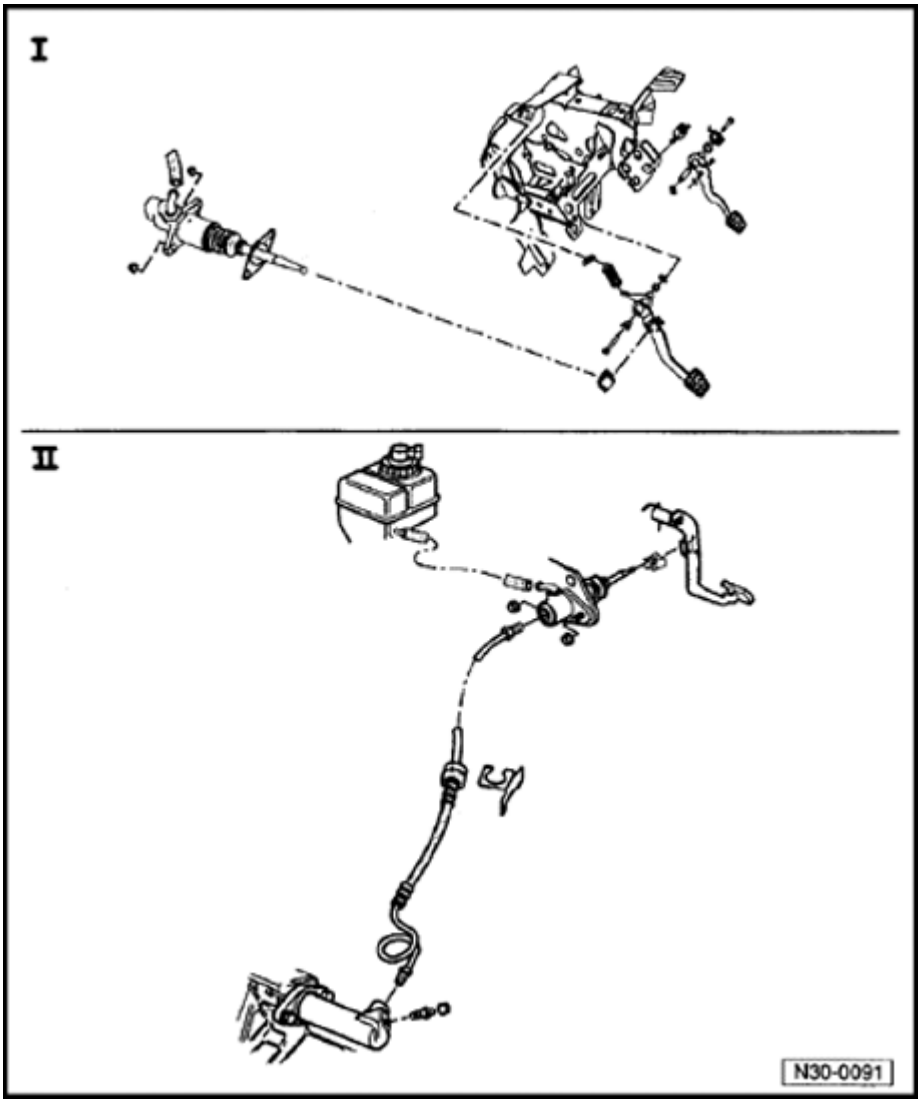

Clutch actuating mechanism

I - Assembly overview - pedal cluster ⇒ Page 30-2

II - Assembly overview - clutch hydraulic system ⇒ Page 30-8

WARNING!

Always replace circlips and self-locking nuts and bolts.

CAUTION!

On vehicles with an anti-theft radio, make sure you know the radio activation code before disconnecting the battery.

Notes:

- *Disconnect battery Ground (GND) strap.*
- *Lubricate all bearings and contact surfaces with MoS_2 grease.*
- *Before starting work on the pedal cluster, remove the instrument panel lower left trim panel*

Repair Manual, Body Exterior, Interior, Repair Group 70

- *Follow General repair instructions ⇒ Repair Group 00*

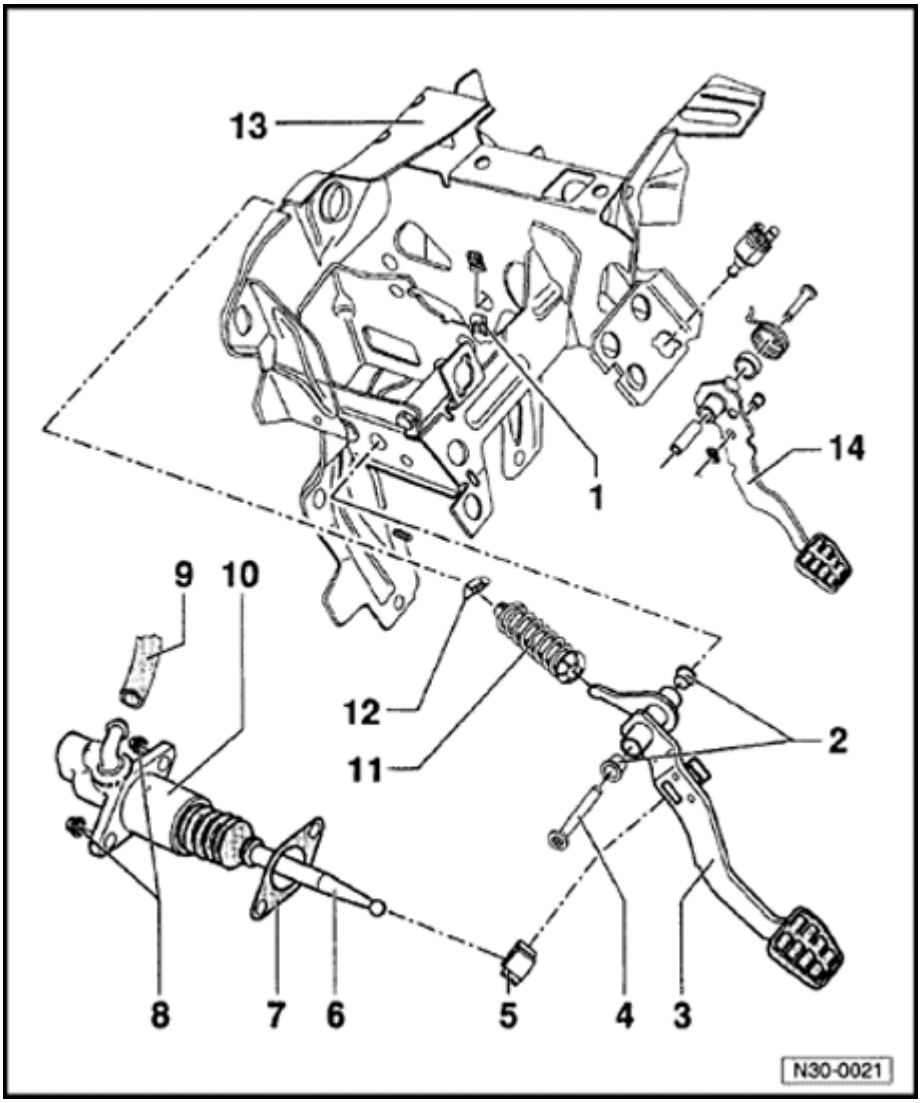

Assembly overview - Pedal cluster

1 - Locking clip

2 - Pivot pin for clutch pedal

- Knock out with drift

3 - Mounting bushing

- Check for wear, replace if necessary
- Drive out with drift 3121
- Press in by clamping in vice, use vice clamps

4 - Clutch pedal

- Removing and installing ⇒ Page 30-7

5 - Retainer

- Removing and installing ⇒ Page 30-9

30-3

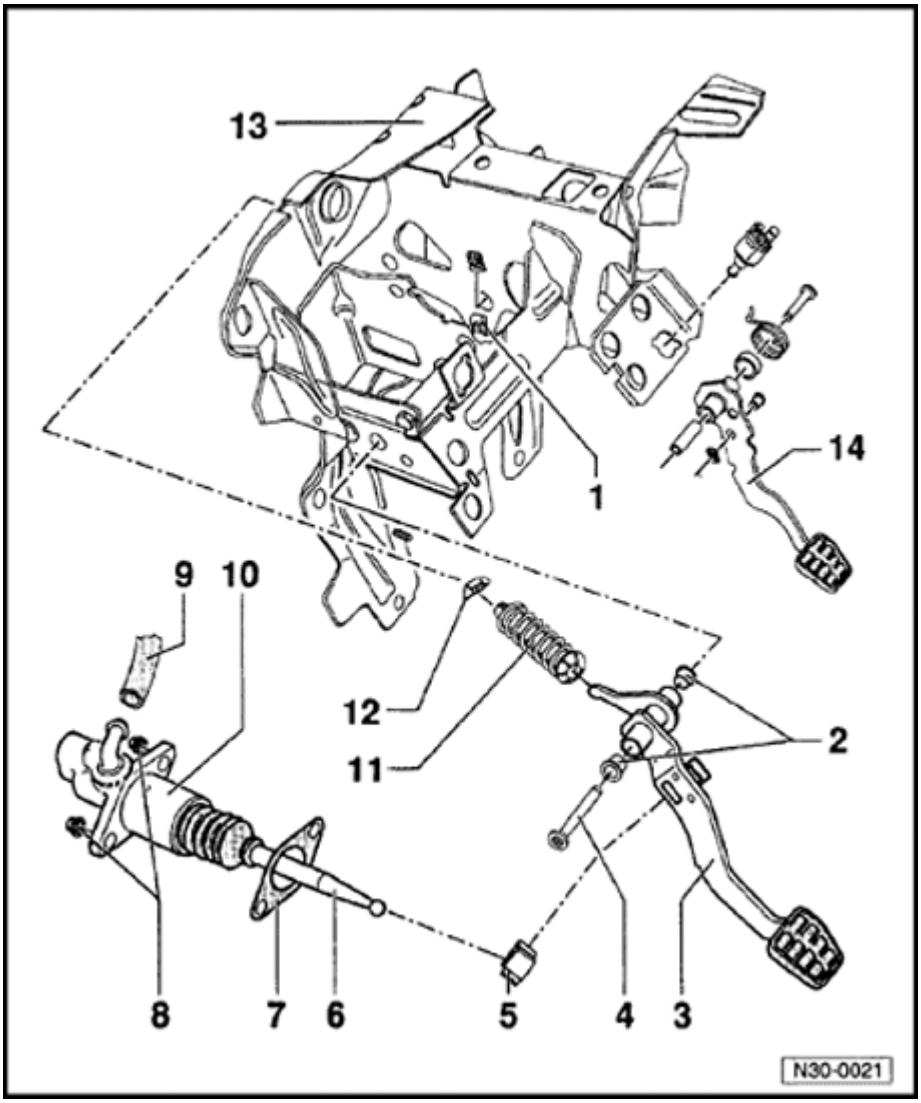

6 - Clutch master cylinder operating rod

7 - Gasket

- Always replace

8 - Self-locking hex nut

- Always renew
- Tightening torque: 25 Nm (18 ft lb)

9 - Supply hose

10 - Master cylinder

- Removing and installing ⇒ Page 30-9

11 - Over-center spring

- Removing and installing ⇒Page 30-6

12 - Over-centre spring mounting

- Install in mounting bracket

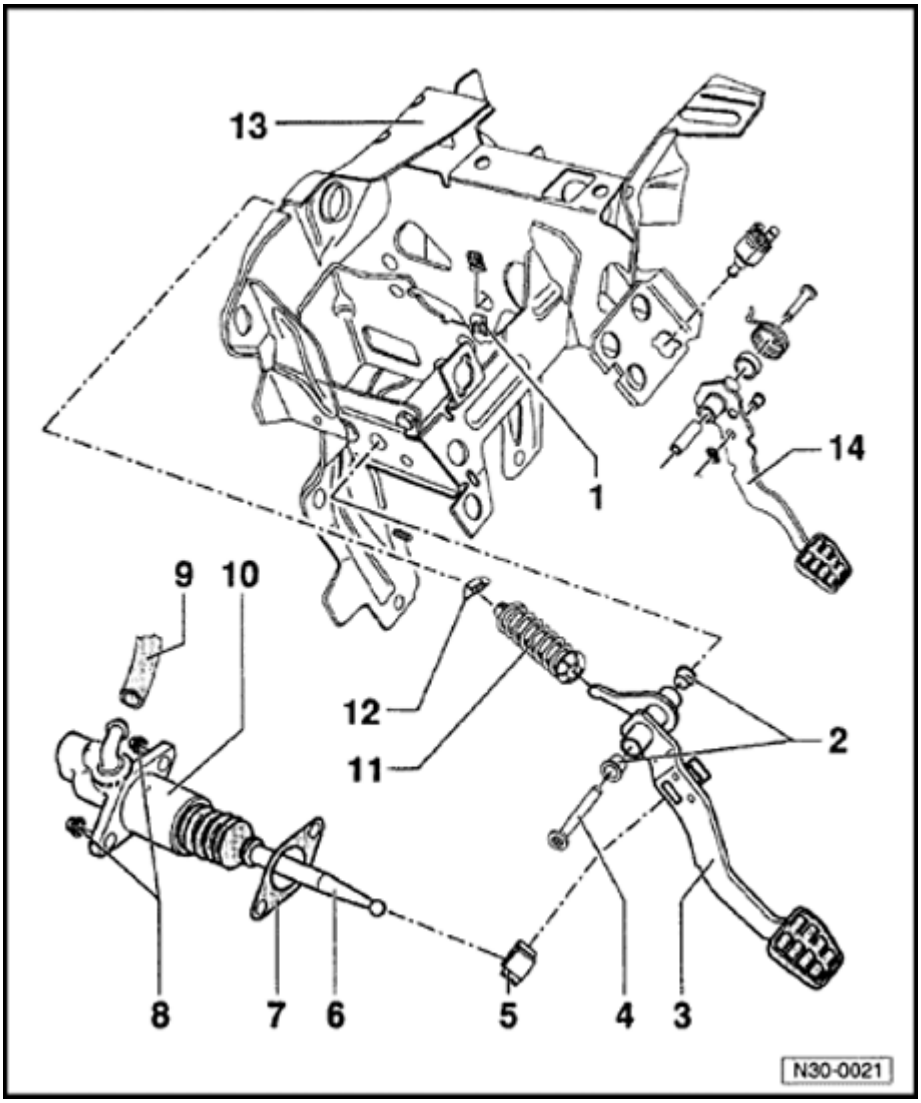

13 - Pedal cluster mounting bracket

- Always replace self-locking nuts for mounting bracket and brake master cylinder; tightening torque: 25 Nm (18 ft lb)

14 - Brake pedal

Over-center spring, removing and installing

Removing

- Remove lower left trim panel, driver s side

⇒ *Repair Manual, Body Exterior, Interior, Repair Group 70*

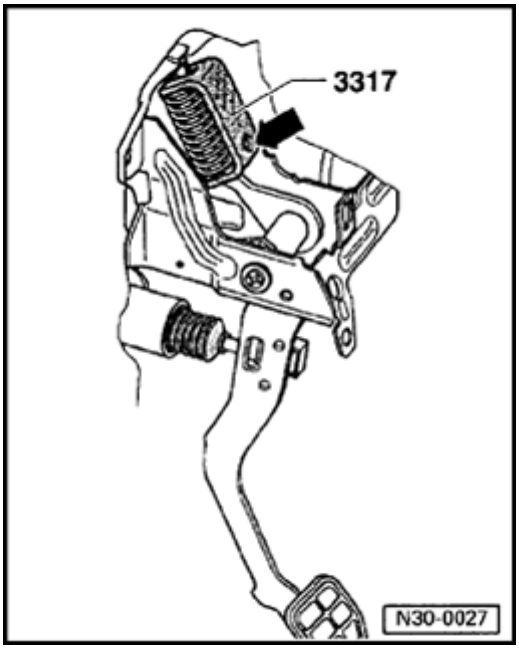

- Using clutch pedal, apply tension to over-center spring and install spring retainer 3317 from above.

Note:

The hole (-arrow-) in the retainer faces toward the clutch pedal.

- Release clutch pedal (return to rest position) and remove over-center spring along with spring retainer 3317.

30-6

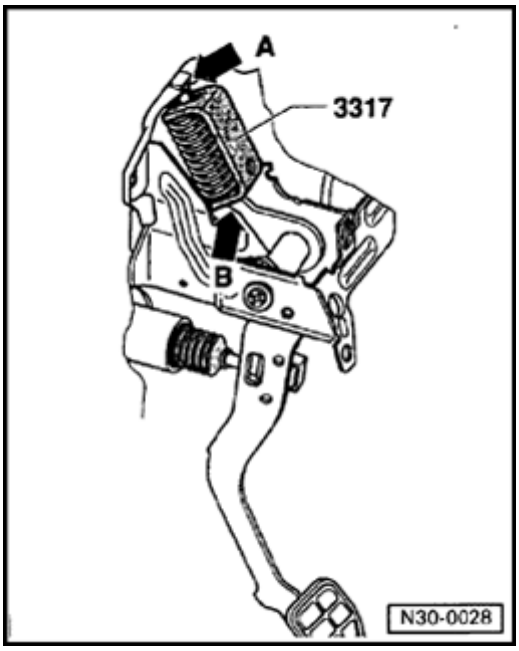

Installing

- Depress clutch pedal.

- First place over-center spring in position (-arrow A-), then lower vertically until spring retainer 3317 seats on clutch pedal mounting lug (-arrow B-).
- Remove spring retainer while returning clutch pedal to rest position.

Clutch pedal, removing and installing

Removing

- Removing over-center spring ⇒ Page 30-5 .
- Separate clutch pedal from master cylinder (⇒ Page 30-13) and push operating rod toward engine compartment onto stop.
- Remove clutch pedal securing clip from pivot pin, by prying tab up with a screwdriver and pushing clip off.
- Drive pivot pin out with drift.
- Remove clutch pedal.

Installing

Install in reverse order of removal.

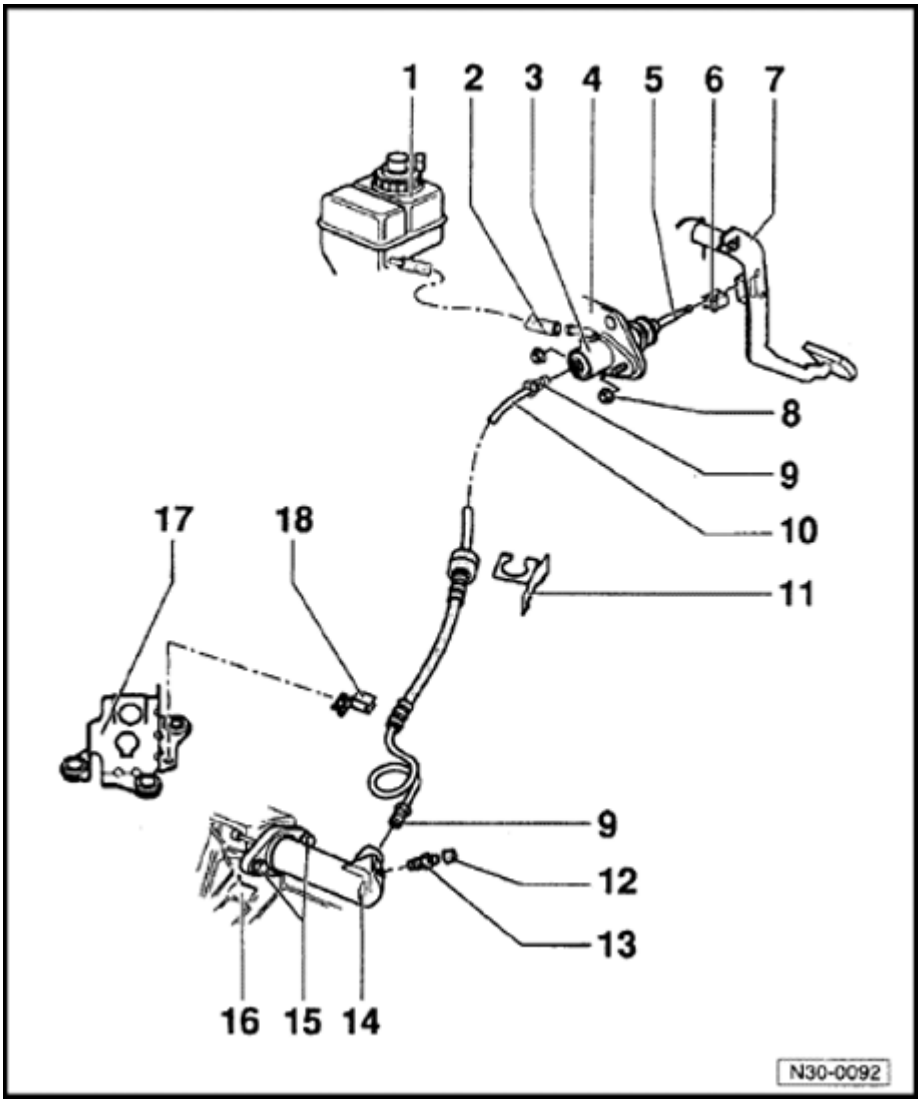

Assembly overview - Clutch hydraulic system

1 - Brake fluid reservoir

2 - Supply hose

3 - Clutch master cylinder

- Removing and installing ⇒ Page 30-13

4 - Mounting bracket

- For clutch master cylinder

5 - Operating rod

- For clutch master cylinder

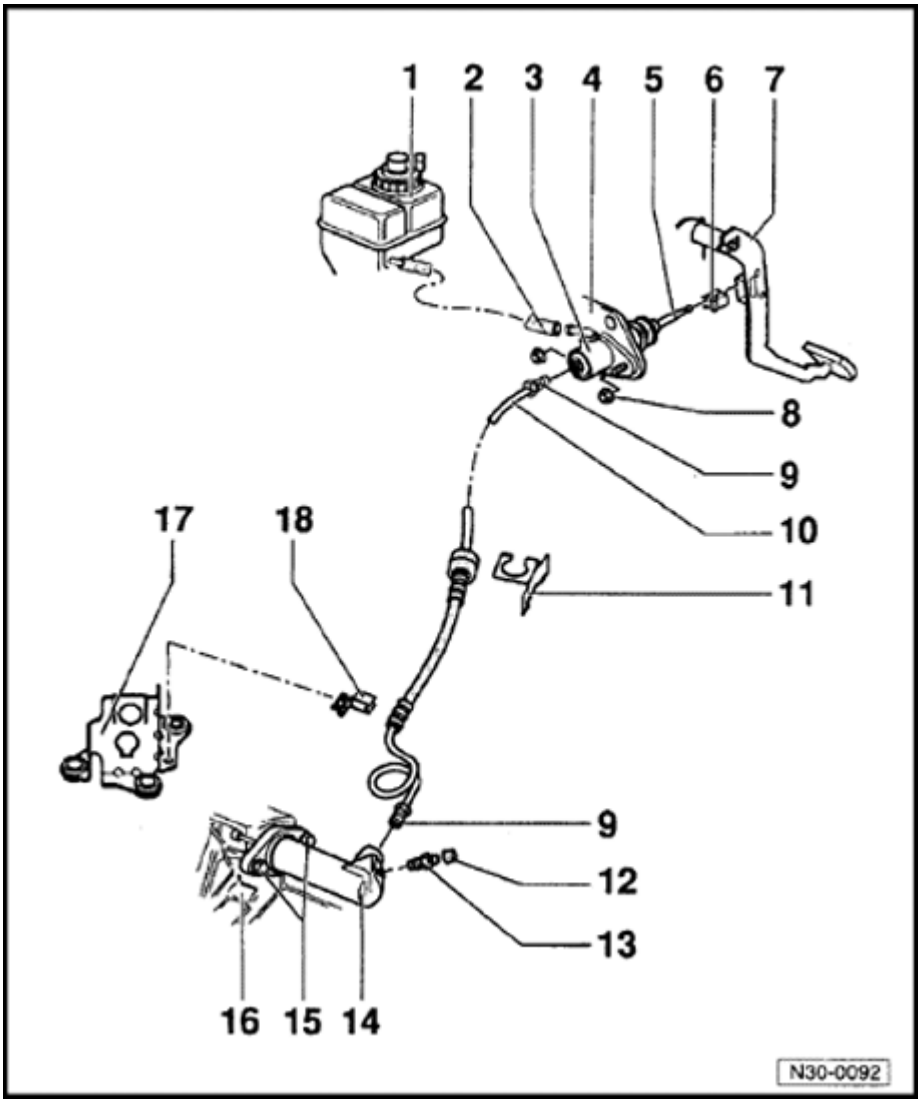

6 - Retainer

- Replace only with clutch master cylinder removed
- Removing ⇒ Fig. 1
- Pressing on ⇒ Fig. 2

7 - Clutch pedal

- Removing and installing ⇒ Page 30-7

8 - Self-locking hex nut

- Always replace
- Tightening torque: 25 Nm (18 ft lb)

9 - Brake line/hose fitting

- Tightening torque: 20 Nm (15 ft lb)

10 - Brake line/hose

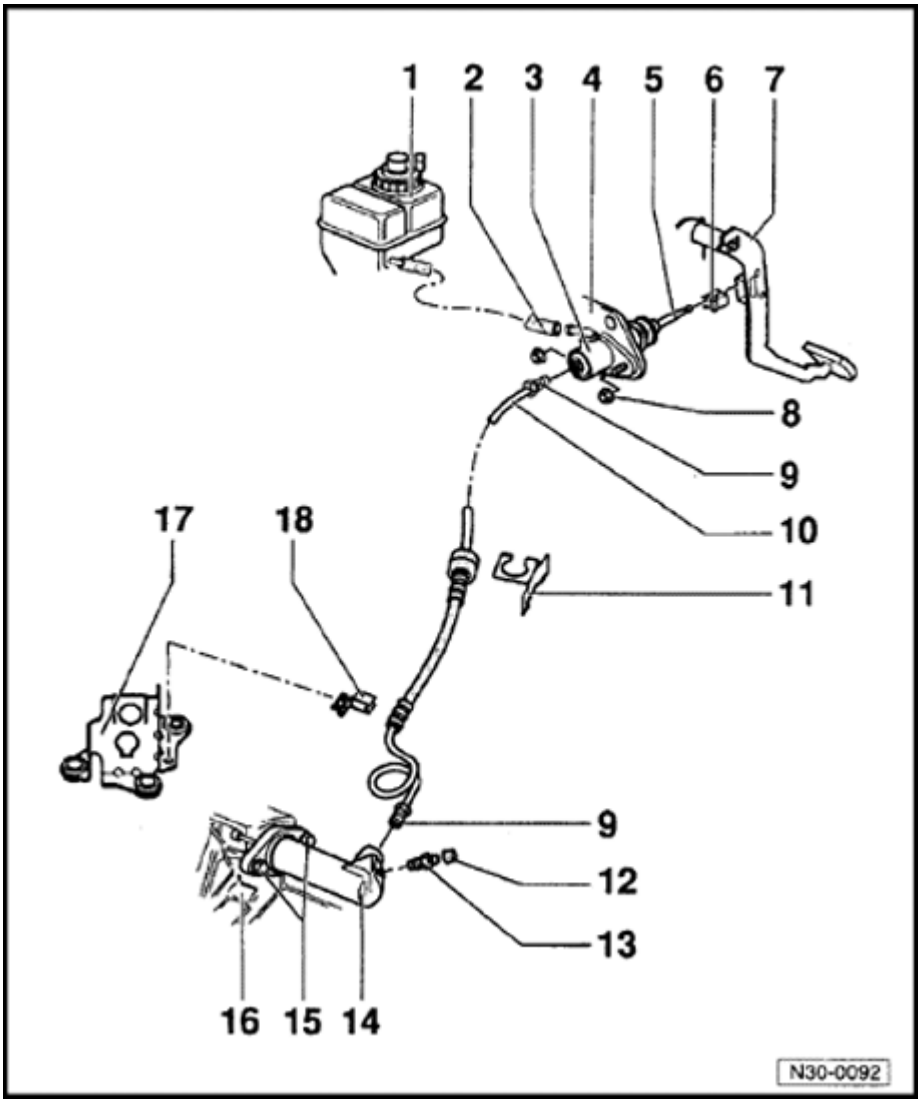

11 - Bracket

- Mounted to bodywork

12 - Dust cap

13 - Bleeder valve

- Bleeding clutch hydraulic system ⇒ Page 30-15

14 - Clutch slave cylinder

- Before removing, remove the following components:
  - Gear selector cable from transmission gear selector lever ⇒ Page 34-4
  - Relay lever and actuating arm for gate selector cable ⇒ Page 34-7
- After installing adjust gear selector mechanism ⇒Repair Group 34

15 - Securing bolt with collar

- Tightening torque: 25 Nm (18 ft lb)

30-11

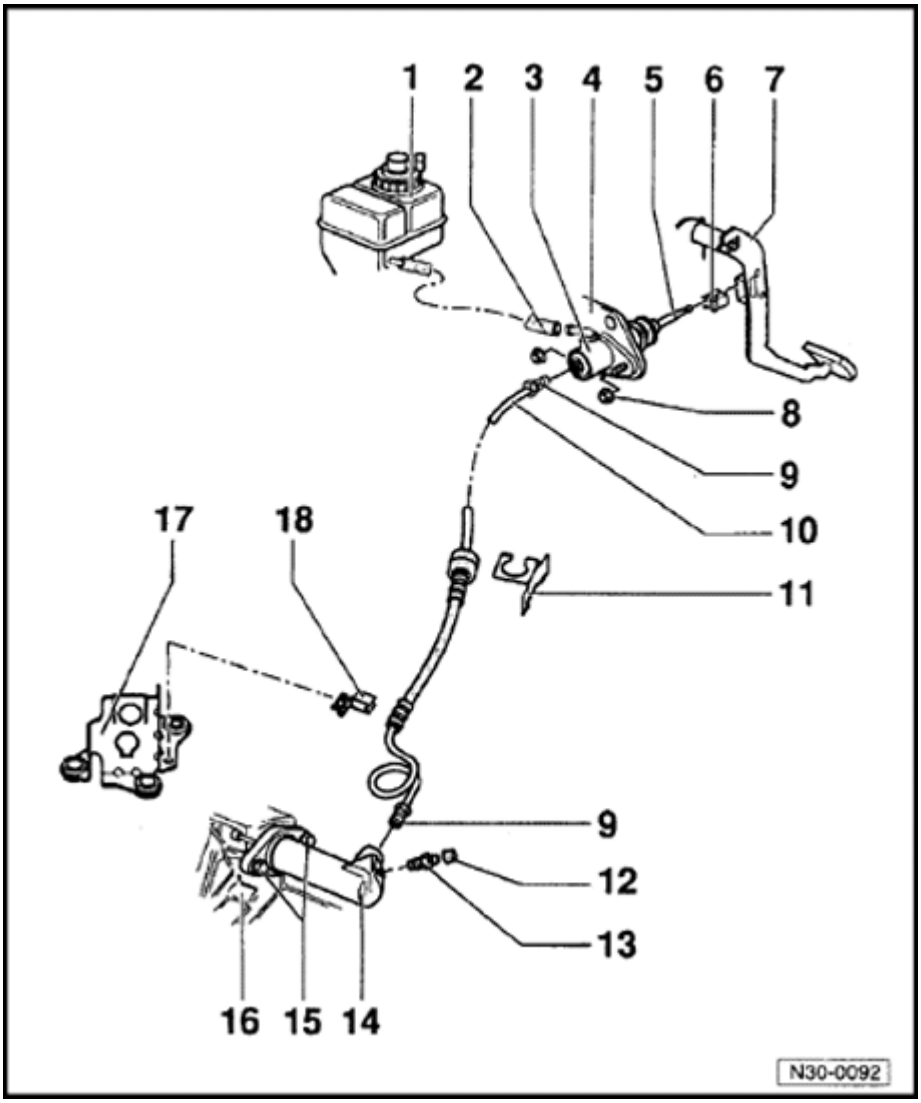

16 - Transmission

17 - Support bracket

18 - Hose bracket

- Secure to control cable/gear selector cable support bracket

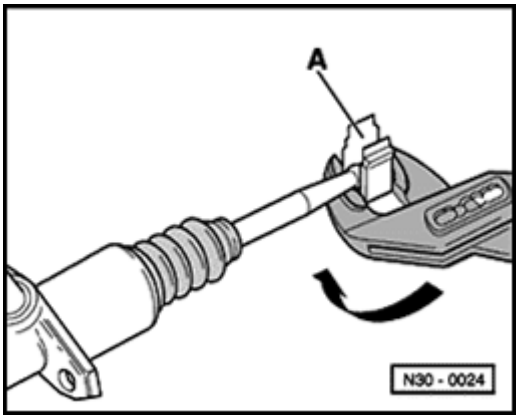

Fig. 1 Removing retainer for master cylinder operating rod

- Pry off retainer -A- in direction indicated by arrow.

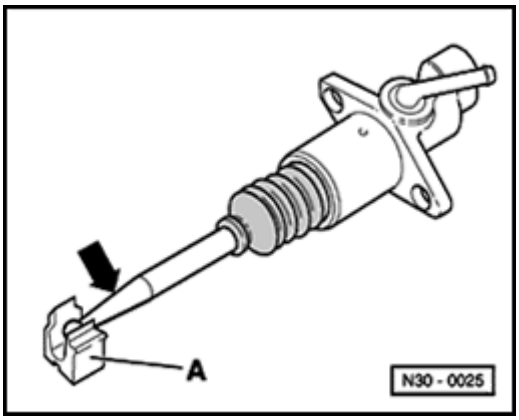

Fig. 2 Pressing on retainer for master cylinder operating rod

- Press master cylinder operating rod into guide -A- in direction indicated by arrow.

Master cylinder, removing and installing

Removing

- Remove coolant expansion tank and lay to one side.

CAUTION!

Do not open the cooling system.

- Disconnect supply hose from brake fluid reservoir and seal.

- Disconnect brake line from master cylinder and seal.

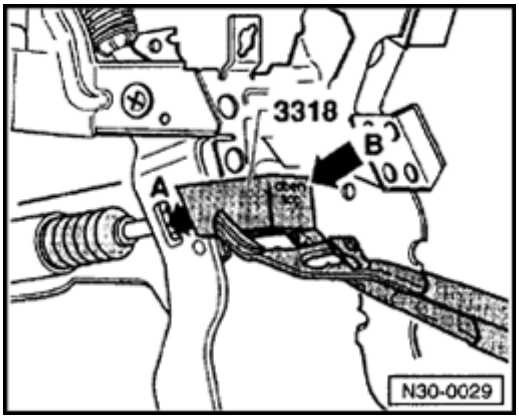

➢ Disconnect master cylinder push rod from pedal cluster, as follows:

- Insert unlocking tool 3318 into cut-outs on clutch pedal -arrow A-.

◆ Inscription "top/oben" -arrow B- faces toward instrument panel

- Press unlocking tool together with pliers.
- Remove master cylinder from engine compartment.

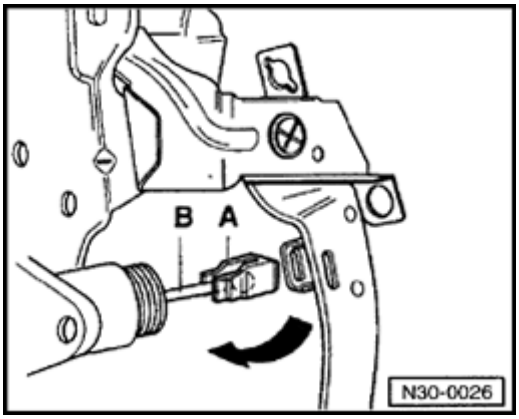

Installing

Install in reverse order of removal. While doing so, note the following:

- Retainer -A- must be installed on master cylinder operating rod -B-.
- To engage retainer, press clutch pedal toward bulkhead (direction indicated by arrow). Make sure retainer is located correctly.
- Bleed clutch hydraulic system after installing master cylinder ⇒ Page 30-15 .

Clutch hydraulic system, bleeding

- Bleed clutch hydraulic system using VAG 1238/1 or VAG 1238B brake filling and bleeding unit.

- To bleed system, use VAG 1238/B bleeder hose; length = 670 mm (26.38 in.)

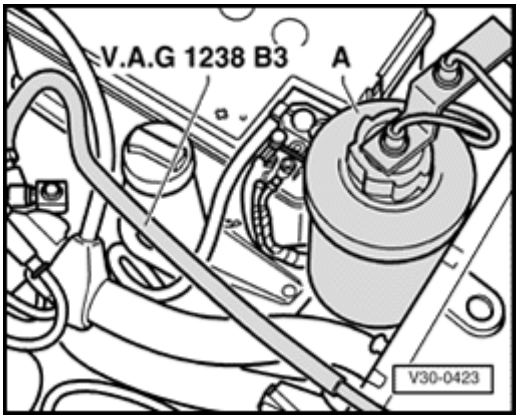

- Connect bleeder hose to brake bleeding unit collector bottle -A- pressure hose.

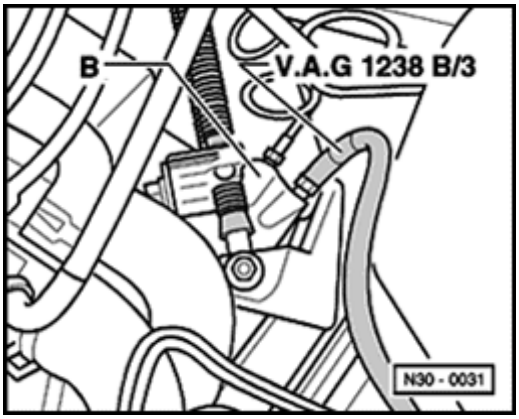

- Connect bleeder hose to slave cylinder -B- and open bleeder valve.
- Depress clutch pedal several times after completing bleeding process.

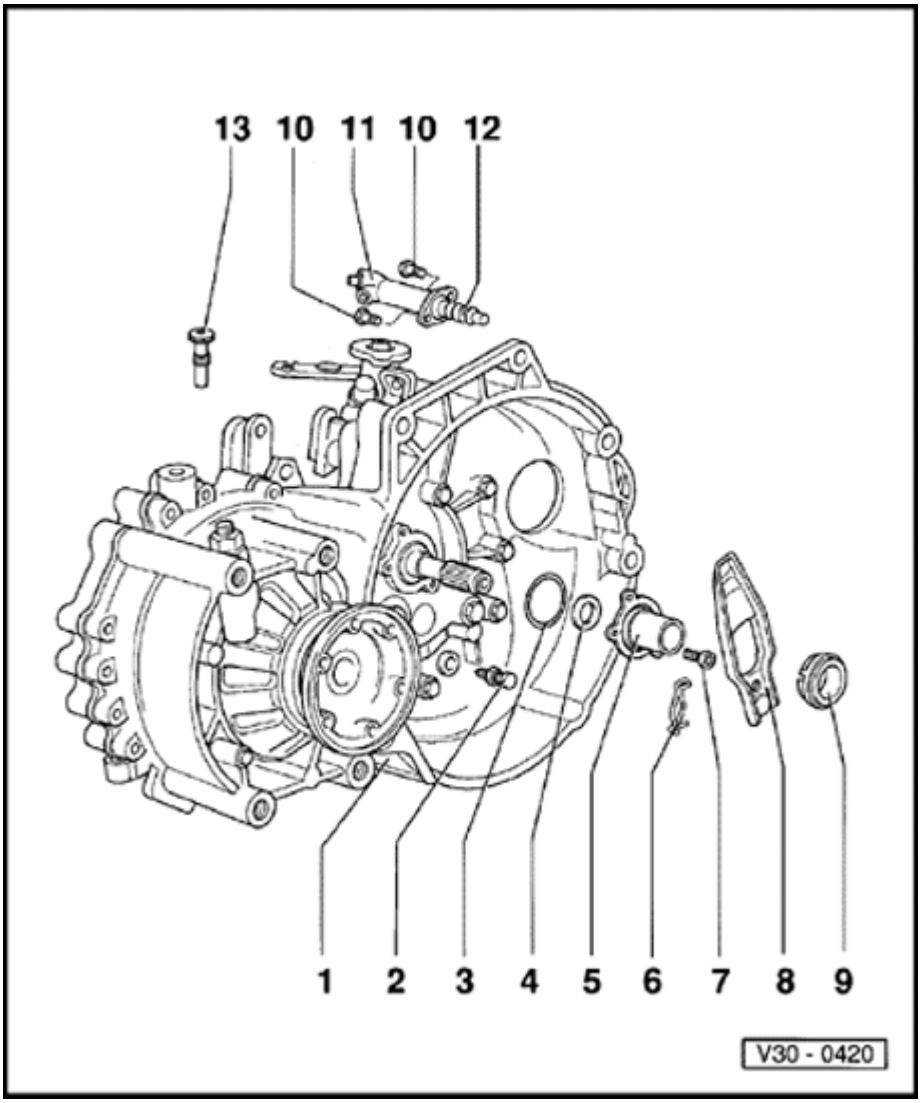

Servicing clutch release mechanism

1 - Transmission

2 - Ball stud

- Tightening torque: 25 Nm (18 ft lb)
- Lubricate with MoS_2 grease

3 - O-ring

- Always replace

4 - Input shaft oil seal

- Removing ⇒ Fig. 1
- Installing ⇒ Fig. 2

5 - Guide sleeve

- Lubricate with MoS2 grease in area of release bearing

6 - Retaining spring

- Attach to clutch release lever

7 - Mounting bolt

- Tightening torque: 20 Nm (15 ft lb)

8 - Clutch release lever

30-17

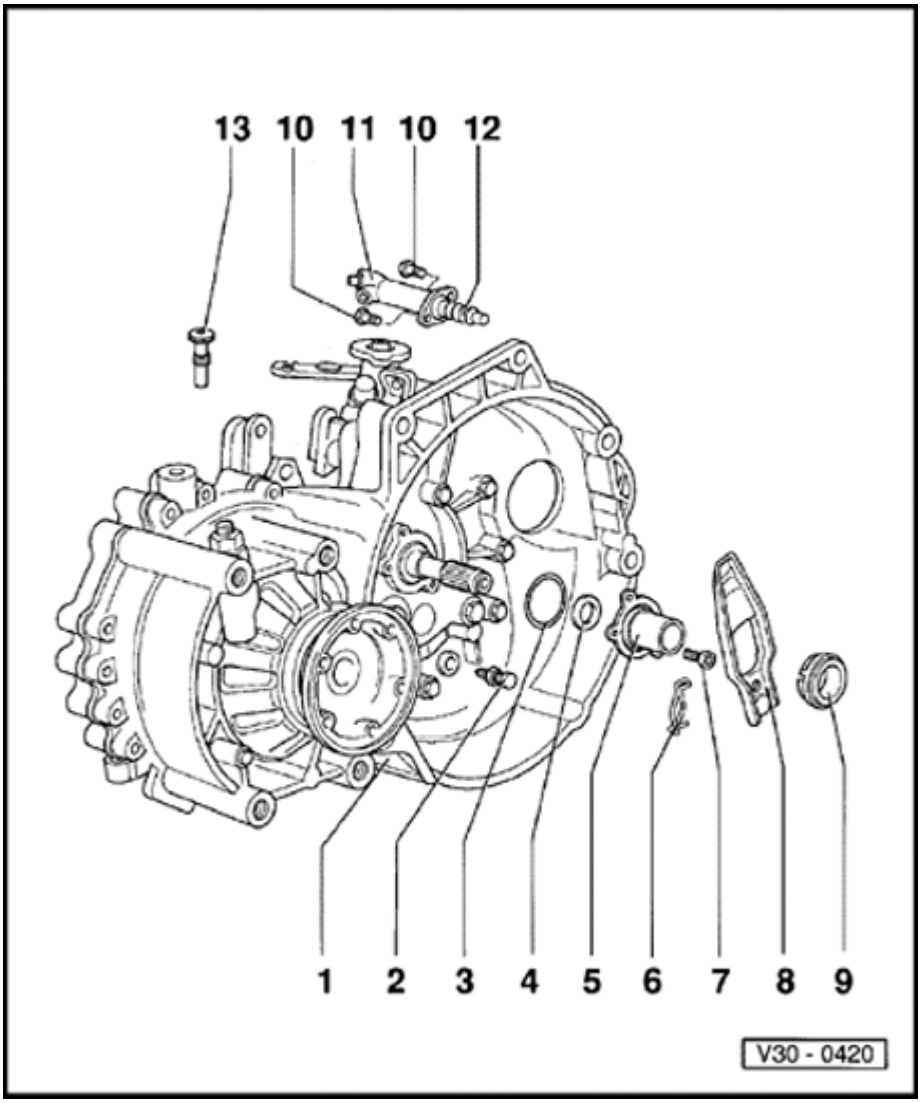

9 - Release bearing

- DO NOT wash bearing (wipe off instead)
- Replace noisy bearings
- Lubricate surfaces that contact clutch release lever with MoS2 grease

10 - Mounting bolt

- Tightening torque: 20 Nm (15 ft lb)

11 - Slave cylinder

- Removing and installing ⇒ Page 30-10

12 - Push rod

- Lubricate end of push rod with MoS2 grease

13 - Assembly pin

- Secures clutch release lever while installing transmission ⇒ Page 34-32 and ⇒ Page 34-46
- Remove after transmission has been installed

Note:

A bolt, M8x35, can be used as a substitute if assembly pin -13- is not available.

30-18

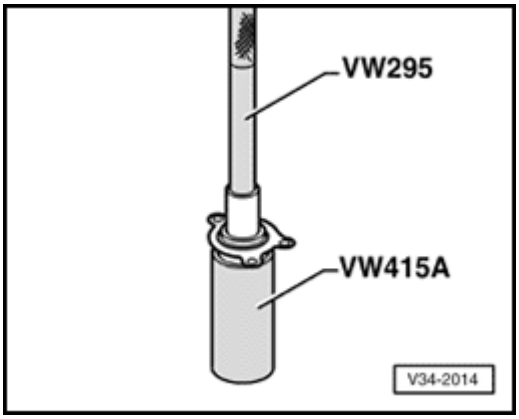

Fig. 1 Removing oil seal from guide sleeve

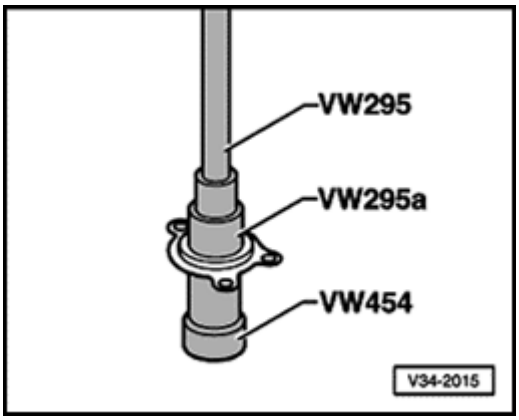

Fig. 2 Installing oil seal into guide sleeve

- Drive in to stop.

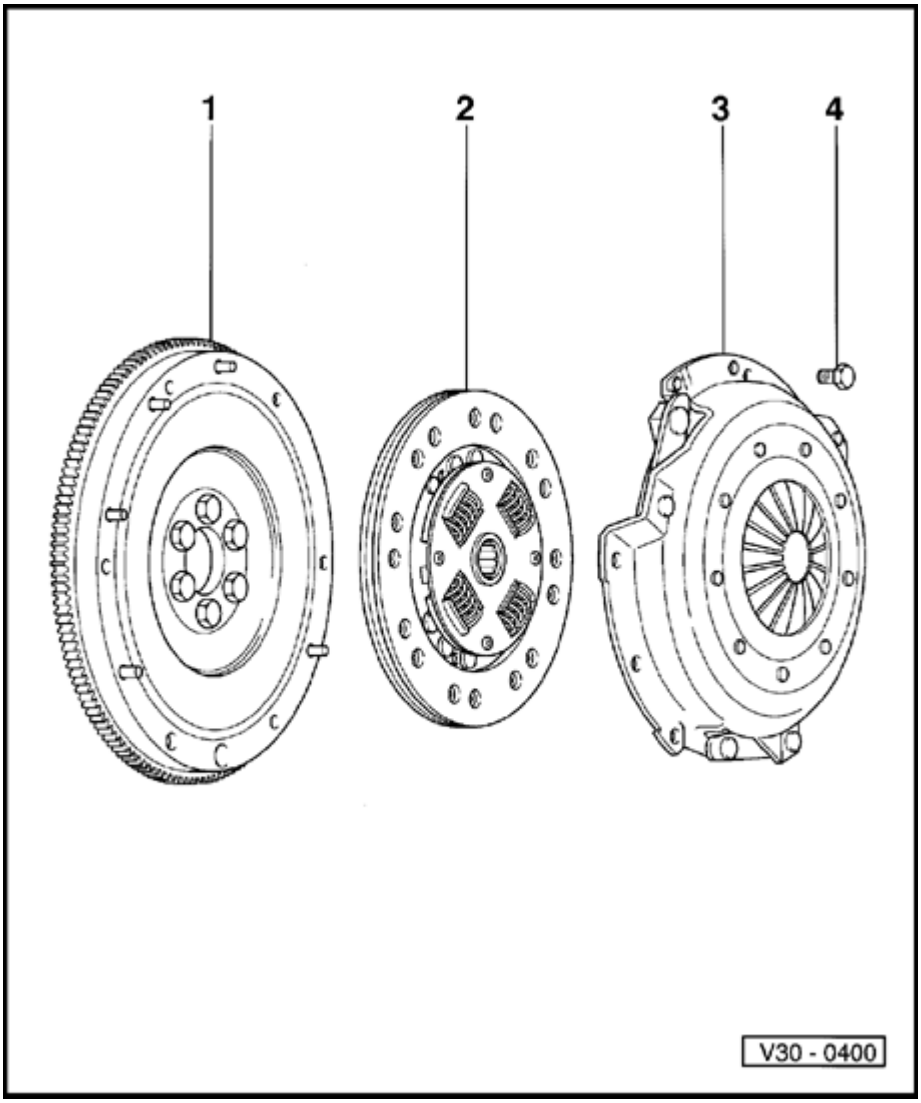

Clutch, servicing

(Transmission removed)

CAUTION!

Always replace a clutch disc or pressure plate that has loose or damaged rivets.

Note:

Make sure that the correct replacement clutch disc and pressure plate are selected accordig to the engine code ⇒ Parts catalog

1 - Flywheel

- Make sure centering dowel pins fit tightly
- Contact surface for clutch disc must be free of grooves, oil and grease
- Removing and installing

⇒ Repair Manual, Engine Mechanical, Repair Group 13

30-20

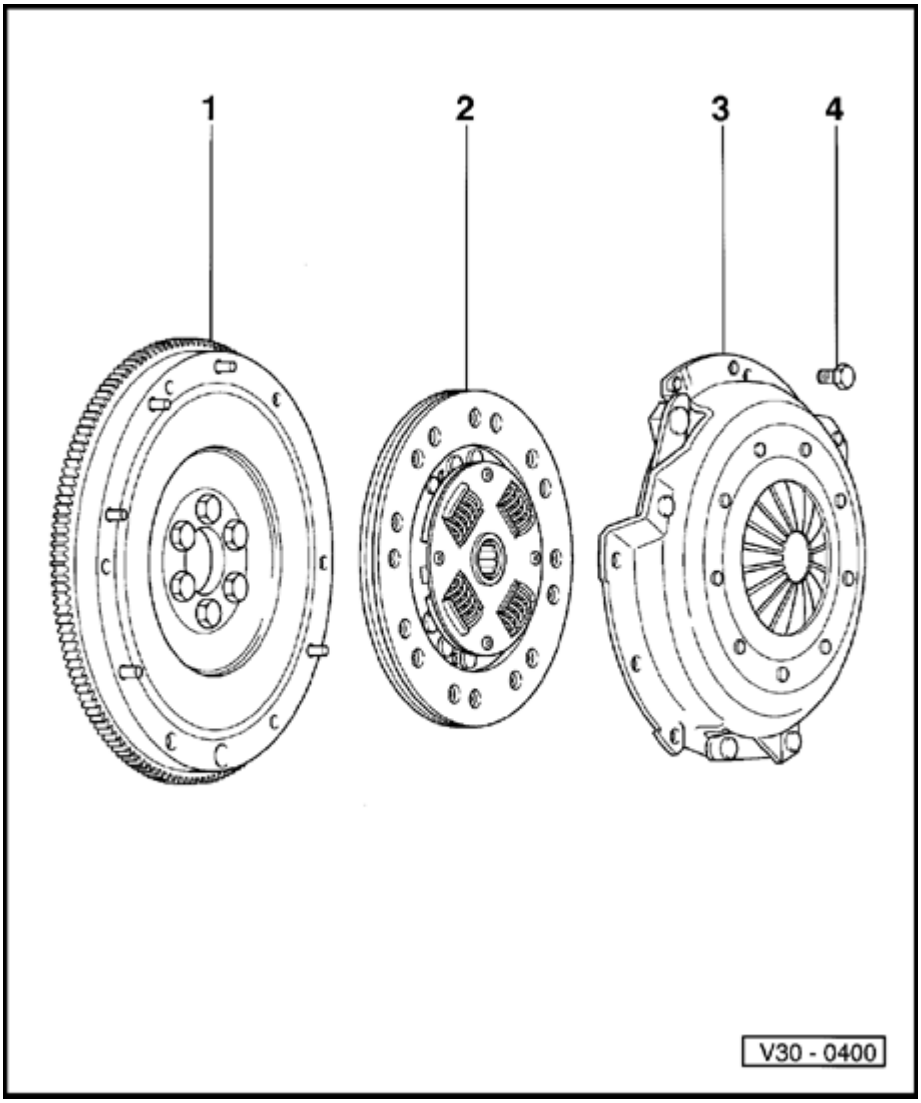

2 - Clutch disc

- Diameter ⇒ Page 00-3
- Note installation position: spring cage faces toward pressure plate
- Centering ⇒ Fig. 1

Note:

- *Before installing clutch disc remove corrosion from input shaft splines and clutch disc hub splines, clean and apply only a very thin coating of grease, Part No. G 000 100, to the splines of the input shaft only.*
- *Place the clutch disc on the input shaft and make sure it moves back and forth freely.*
- *Remove excess grease.*

30-21

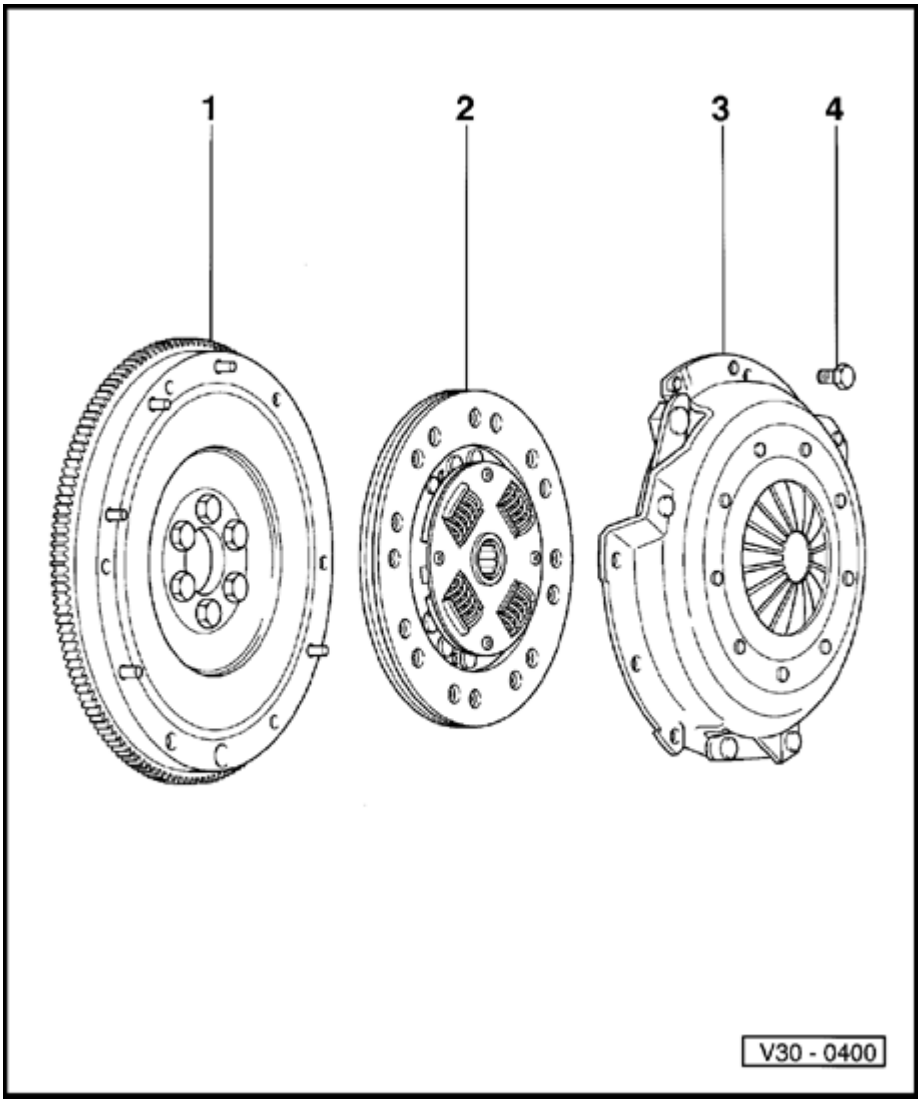

3 - Pressure plate

- Removing and installing ⇒ Fig. 1
- Check ends of diaphragm spring ⇒ Fig. 2

CAUTION!

Pressure plates are protected against corrosion. Only the clutch disc contact surface may be cleaned.

4 - 12-point bolt

- Tightening torque: 20 Nm (15 ft lb)
- Loosen and tighten evenly in stages, alternating in a diagonal pattern

30-22

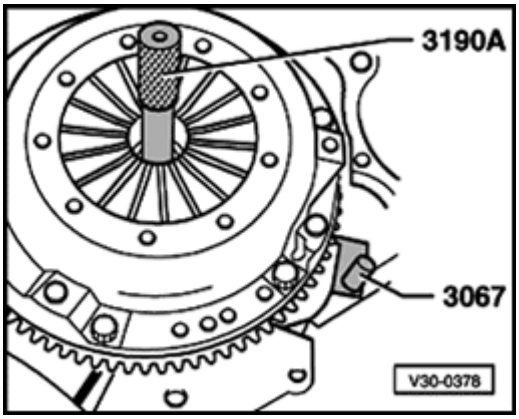

Fig. 1 Centering clutch disc and removing and installing pressure plate

- Loosen and tighten evenly in stages, alternating in a diagonal pattern.
- When removing, reverse position of flywheel retainer 3067.

CAUTION!

- ***Pressure plate contact surface and clutch disc must make full contact with flywheel.***
- ***Tighten mounting bolts evenly in a diagonal pattern to prevent damage to the centering holes in the pressure plate housing and the centering pins in the flywheel.***

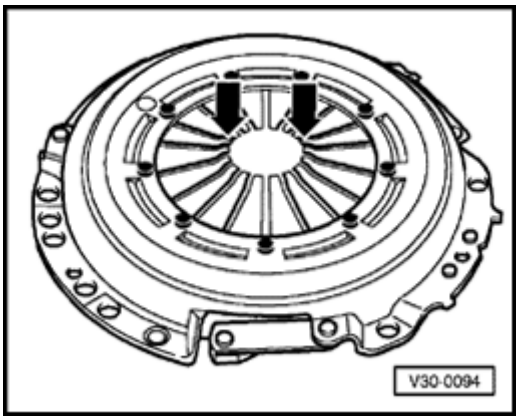

Fig. 2 Checking diaphragm spring

- Check ends of diaphragm spring -arrows- for wear.
  - Maximum wear: up to half of original diaphragm spring thickness

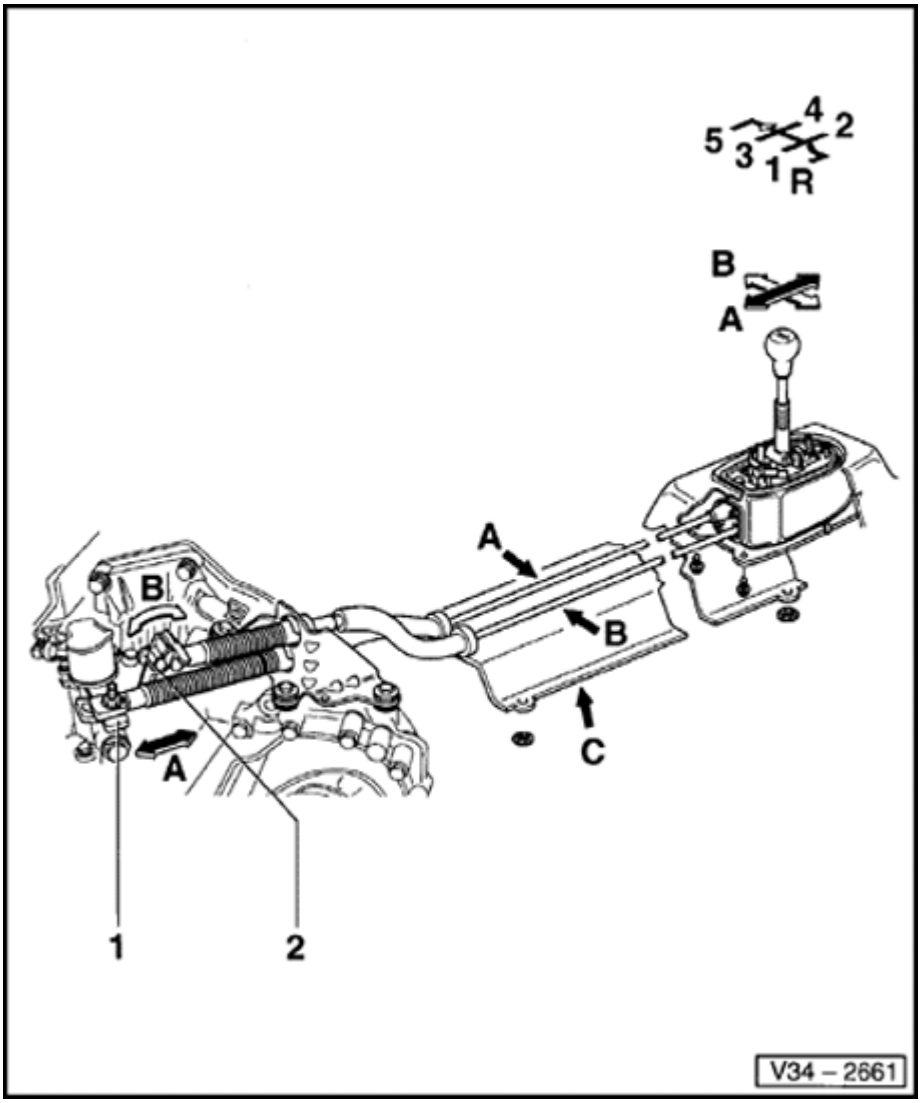

Gear selector mechanism, servicing

Installation position

A - Gear change cable

B - Gate selector cable

C - Heat shield

- Holds selector cables in position
- Remove before removing the gear selector mechanism.

Shift lever control

Arrow -A- (black) - Gear selection

Arrow -B- (white) - Gate selection

1 - Gear selector lever

2 - Relay lever with actuating arm

34-2

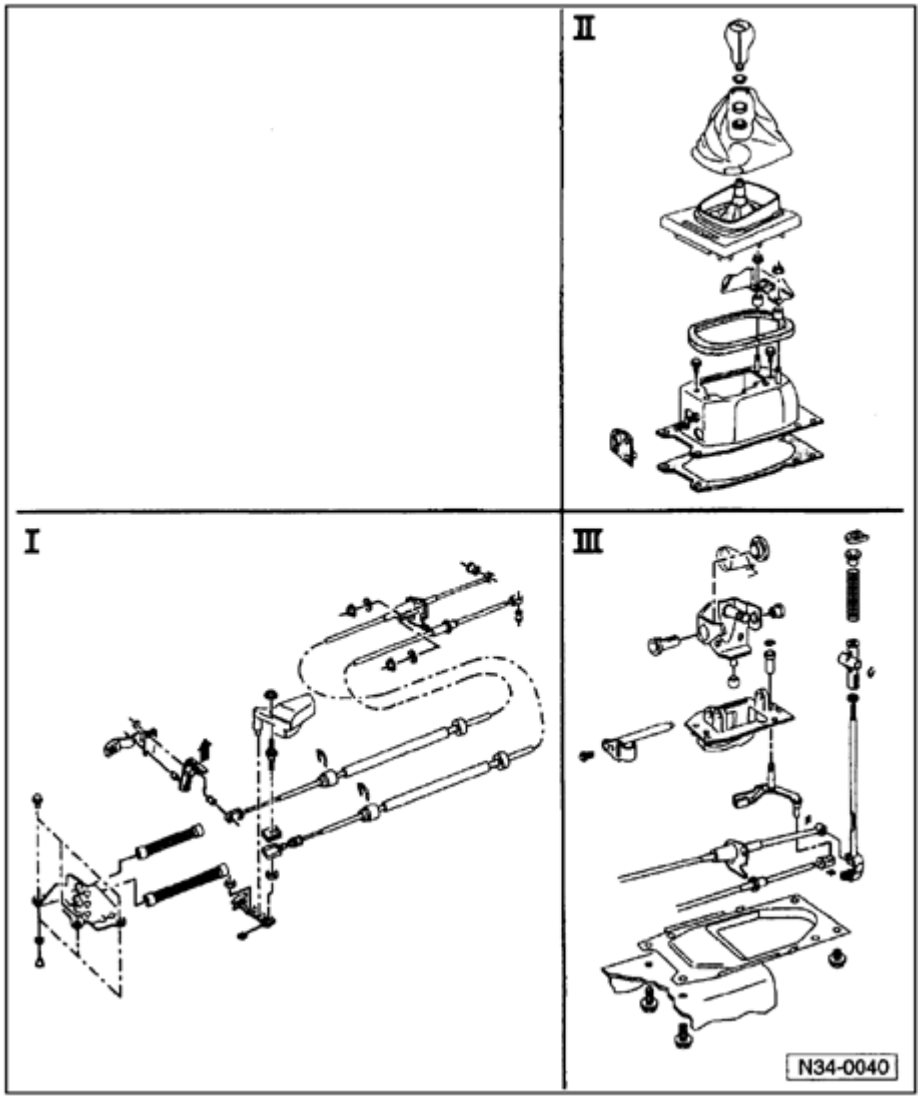

CAUTION!

- ***Before working on the gear selector mechanism, disconnect the Battery Ground (GND) strap in the engine compartment.***
- ***On vehicles equipped with an anti-theft radio, make sure you know the correct radio activation code before disconnecting the battery.***

I - Removing and installing gear selector control cables ⇒ Page 34-4

II - Removing and installing gear stick housing ⇒ Page 34-10

III - Removing and installing gear lever ⇒ Page 34-14

Note:

Before removing the gear selector mechanism, remove the following components:

- *Three Way Catalytic Converter (TWC)*
- *Heat shield ⇒ Page 34-1*

34-3

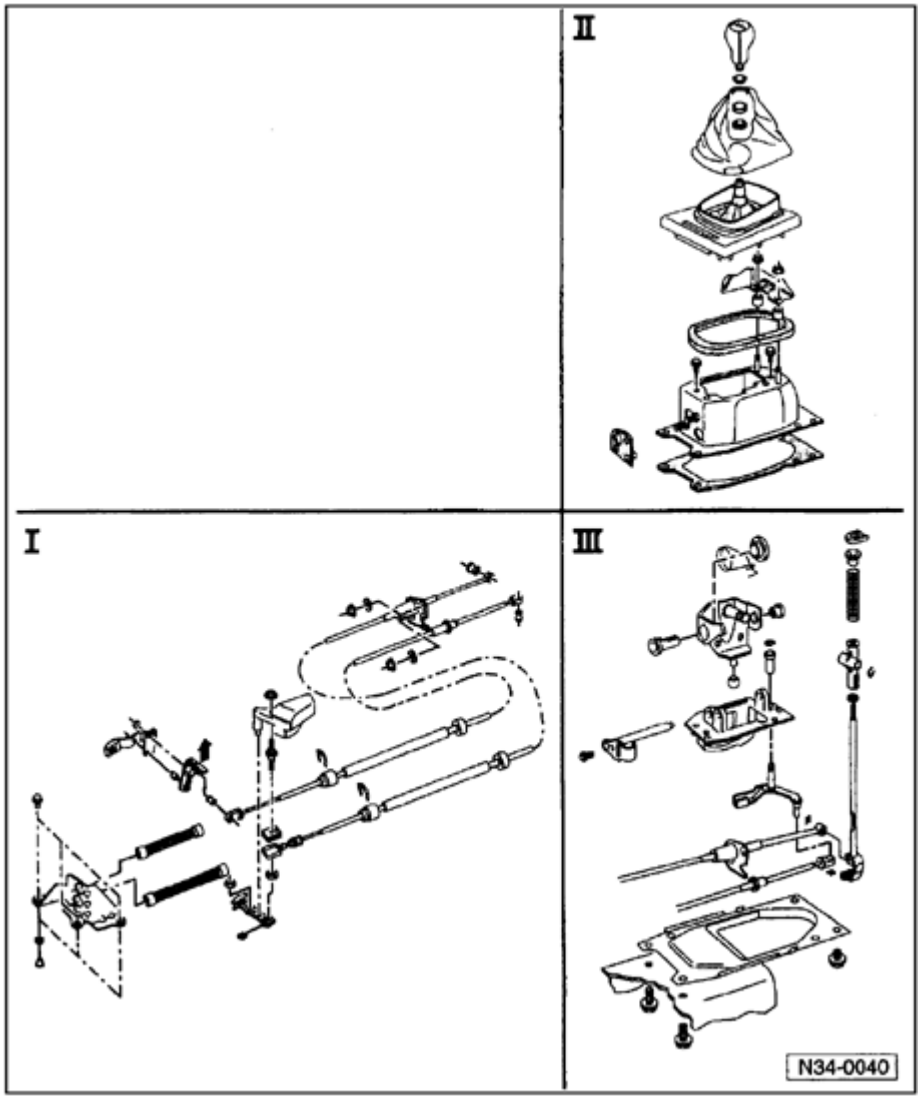

Notes:

- *To replace the selector cables remove gear selector mechanism complete.*
- *Do not kink selector cables.*
- *Lubricate all mountings and contact surfaces with MoS_2 grease.*
- *Adjusting selector cables ⇒ Page 34-19*

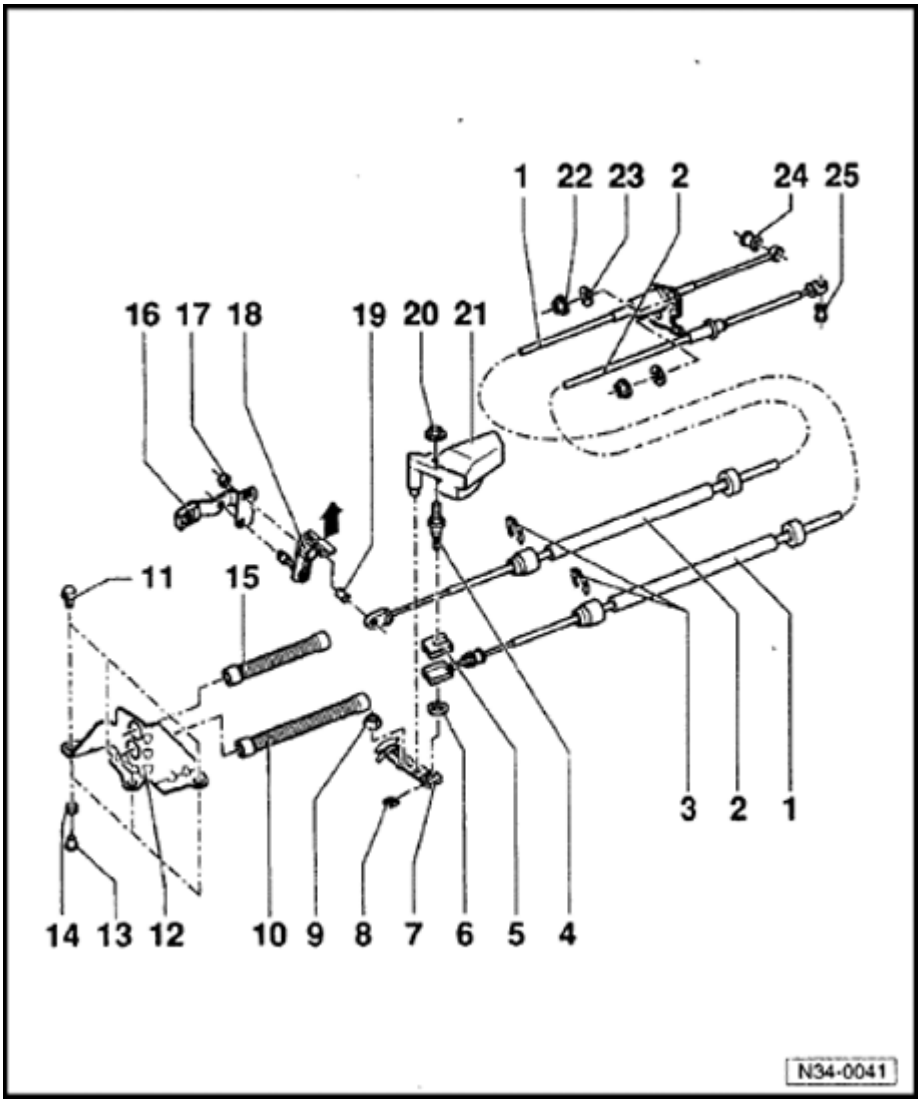

Gear selector control cables, removing and installing

Note:

Lubricate all mountings and contact surfaces with MoS_2 grease.

1 - Gear selector cable

- Installation position ⇒ Page 34-1

2 - Gate selector cable

- Pull off actuating arm (item 18) by pulling lug in direction of arrow
- Installation position ⇒ Page 34-1
- Install before installing gear selector cable

3 - Circlip

- Be careful to avoid damaging boot when removing

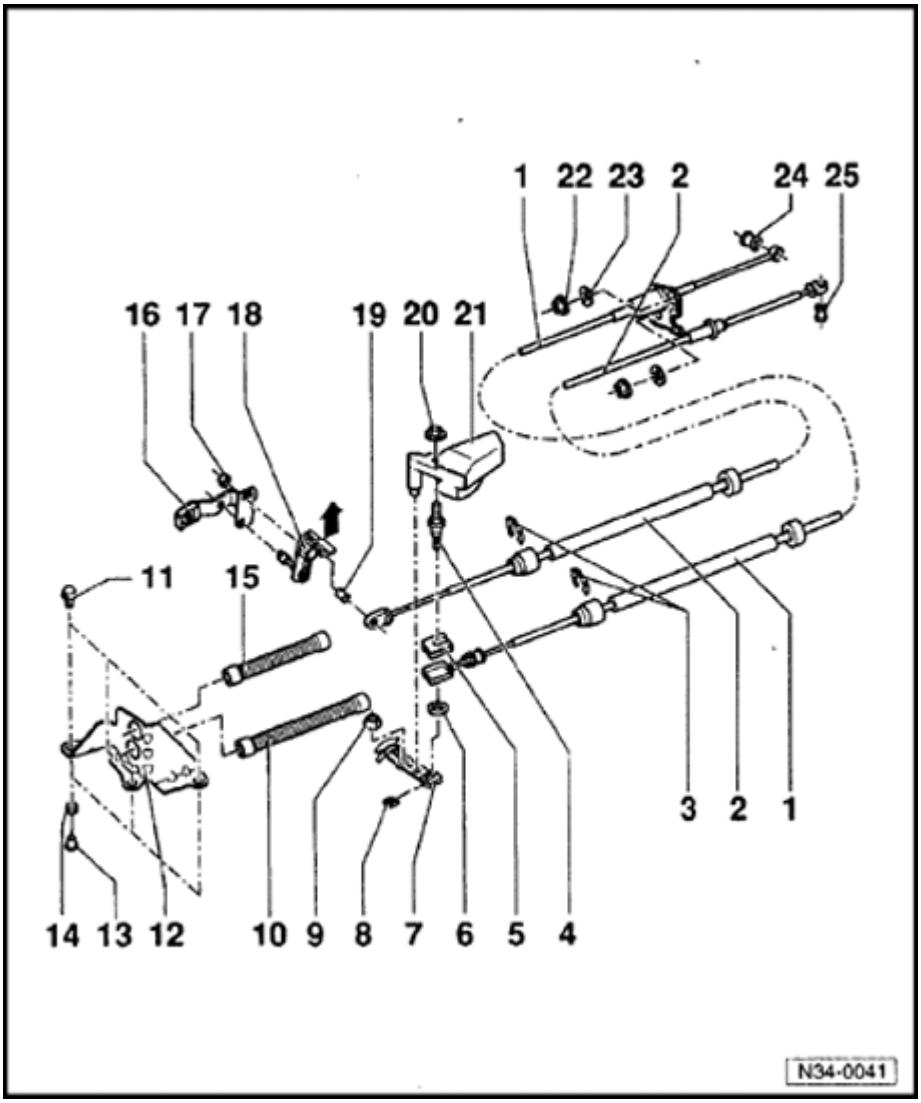

4 - Hex bolt

- With shoulder
- Tightening torque: 25 Nm (18 ft lb)
- Attaches gear selector cable to gear selector lever -7-

5 - Rubber bushing

- For gear change cable to gear selector lever
- Press out of cable end piece when replacing boot

6 - Washer

- Install between gear selector cable and gear selector lever

7 - Gear selector lever

- Only fits in one position
- After installing adjust gear selector mechanism ⇒ Page 34-19
- Installation position ⇒ Page 34-9

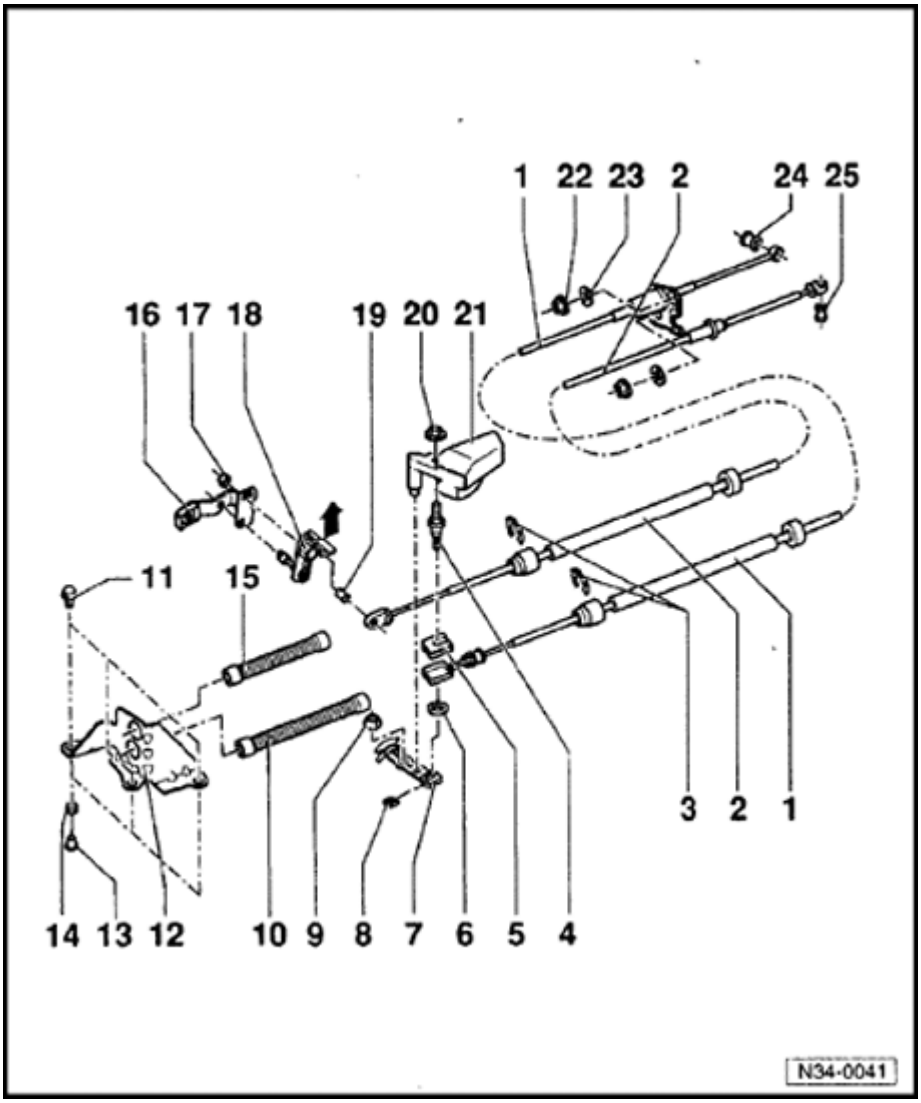

8 - Square nut

- Insert into gear selector lever

9 - Self-locking hexagon nut, 25 Nm

- For gear selector lever
- Always replace

10 - Boot

- For gear selector cable -1-
- Carefully pull over gear selector cable end piece
- Use MoS_2 grease

11 - Hexagon bolt, 25 Nm

- For support bracket

12 - Support bracket

13 - Spacer

14 - Bushing

- For mounting support bracket to transmission

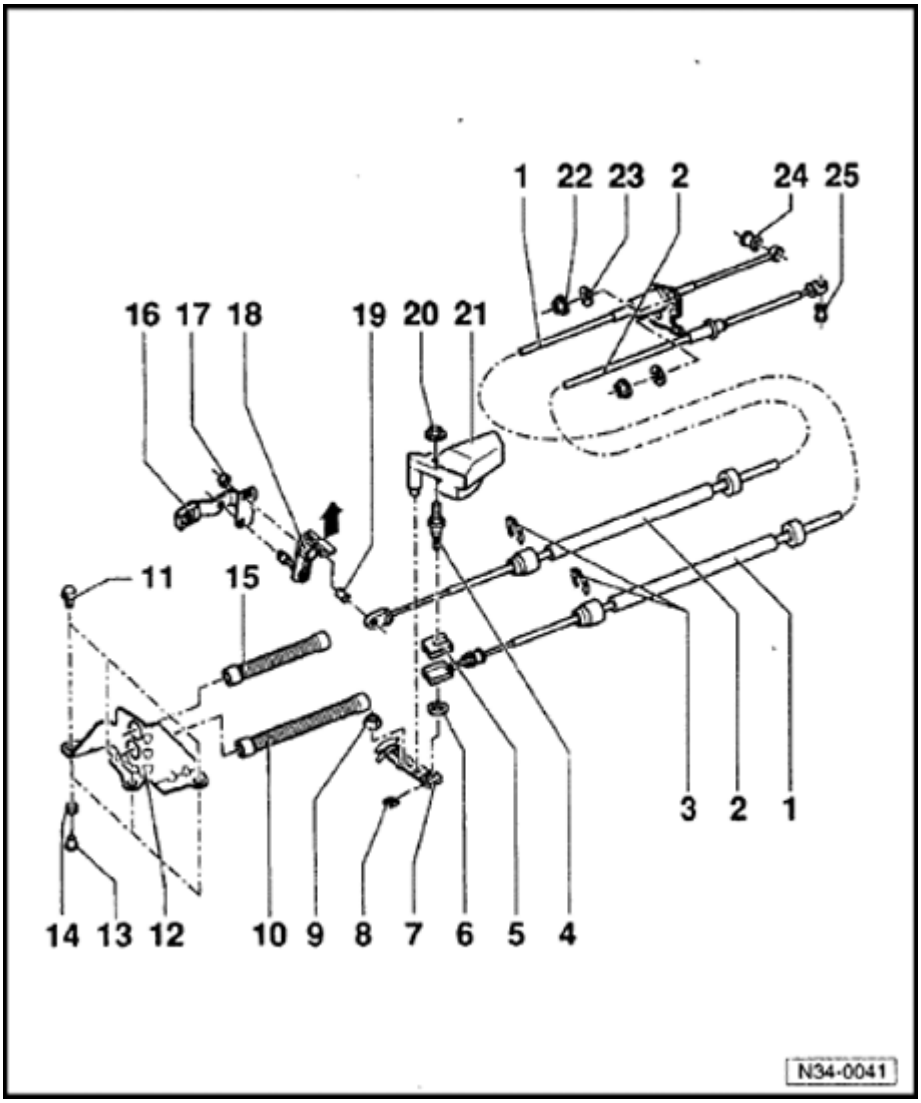

15 - Boot

- For gate selector cable -2-
- Carefully pull over gear selector cable end piece
- Use MoS_2 grease

16 - Relay lever

- Remove before removing clutch control
- Installation position ⇒ Page 34-9

17 - Self-locking hexagon nut, 15 Nm

- Always replace
- Only loosen to adjust selector mechanism

18 - Actuating arm

- With pivot pin to mount relay lever
- Installation position ⇒ Page 34-9

34-8

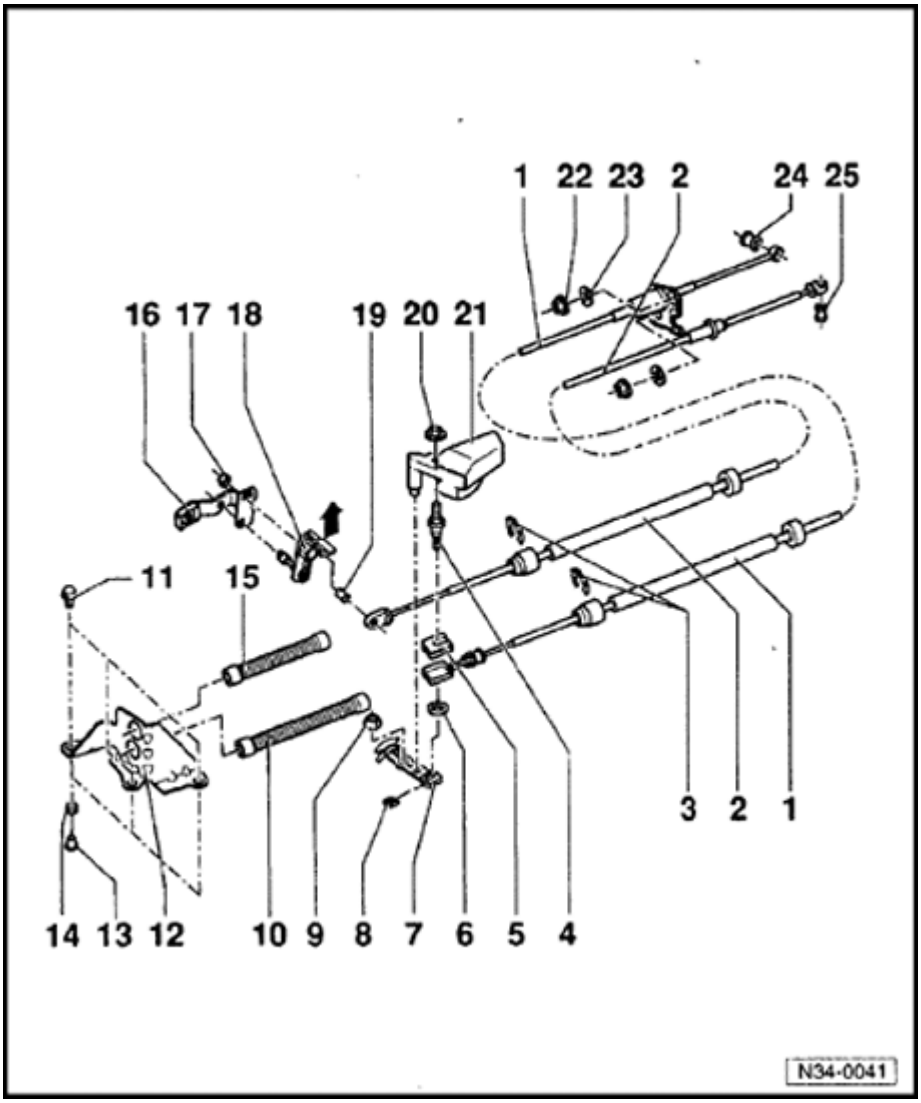

19 - Rubber bushing

- For gate selector cable to actuating arm
- Press in and out with drift

20 - Self-locking hexagon bolt, 20 Nm

- Always replace

21 - Balance weight

- Remove to adjust selector mechanism

22 - Self-locking hexagon nut, 15 Nm

- For selector cable to selector housing
- Always replace

23 - Rubber washer

24 - Rubber bushing

- For gear selector cable/gear change lever
- Press in and out with drift

25 - Bushing

- For gate selector cable/selector bracket
- Press in and out with a drift

34-9

Gear selector lever and relay lever, installation position

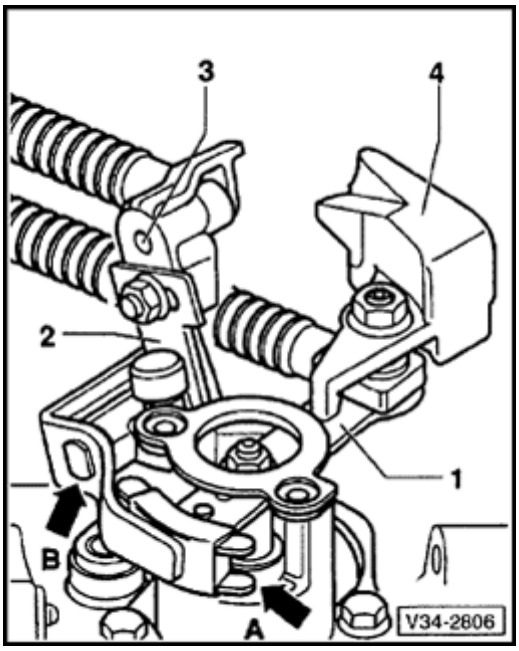

1 - Gear selector lever

2 - Relay lever

Locates in guide rail of gear shift lever (arrow -A-)

Lubricate with MoS_2 grease

3 - Actuating arm

Flats (arrow -B-) of axis face mounting, relay lever only fits in one position

4 - Balance weight

Fasten to gear selector lever

Note:

For ease of illustration the linkage and the Back-up Light Switch (F4) are not shown in the illustration.

34-10

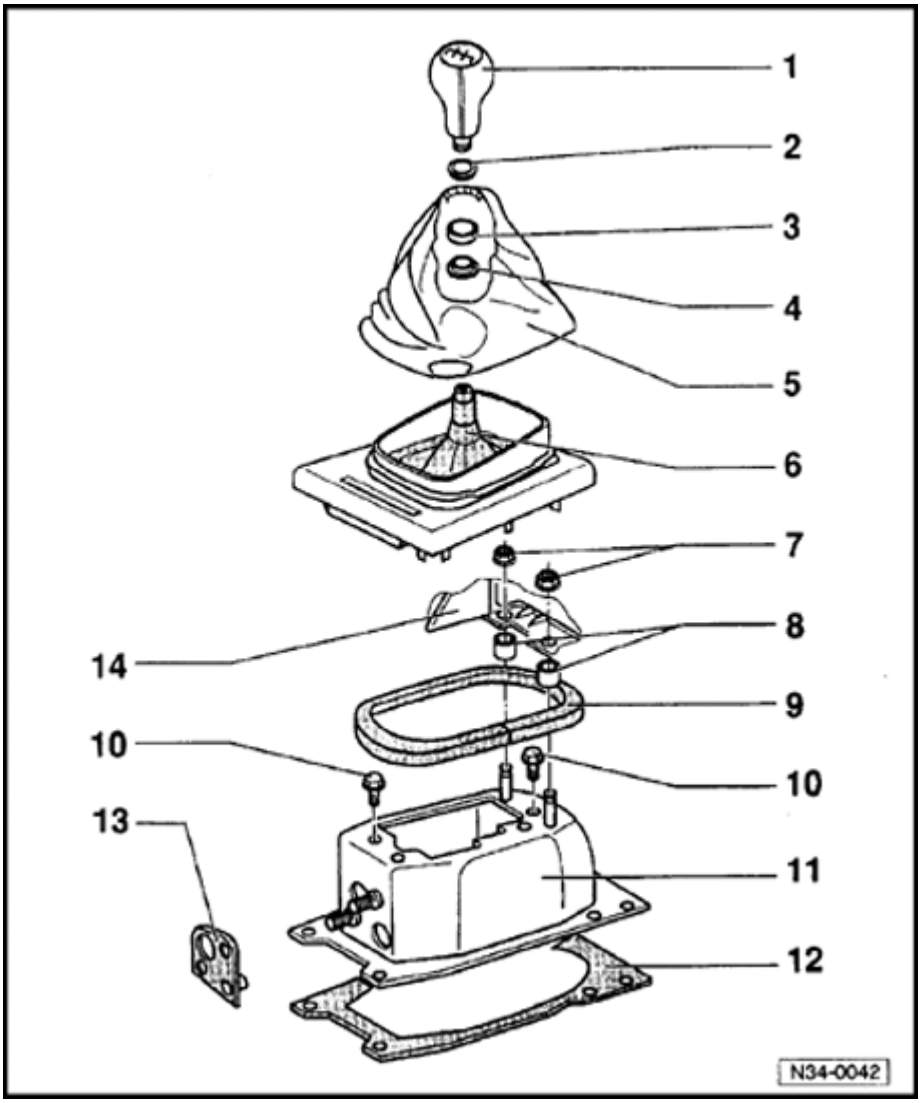

Gear selector housing, removing and installing

1 - Shift knob

2 - Collar

3 - Retaining collar

4 - Spring collar

- Removing ⇒ Fig. 1
- Installing ⇒ Fig. 2

5 - Boot

- Pull off from frame
- Connect to gear stick knob before installing

6 - Rubber cover with frame

- Always remove and install together
- After installing fit boot (Item 5)

7 - Plastic nut

- Console to gear stick housing
- Remove before removing gear selector mechanism

8 - Spacer sleeve

- Between console and gear stick housing

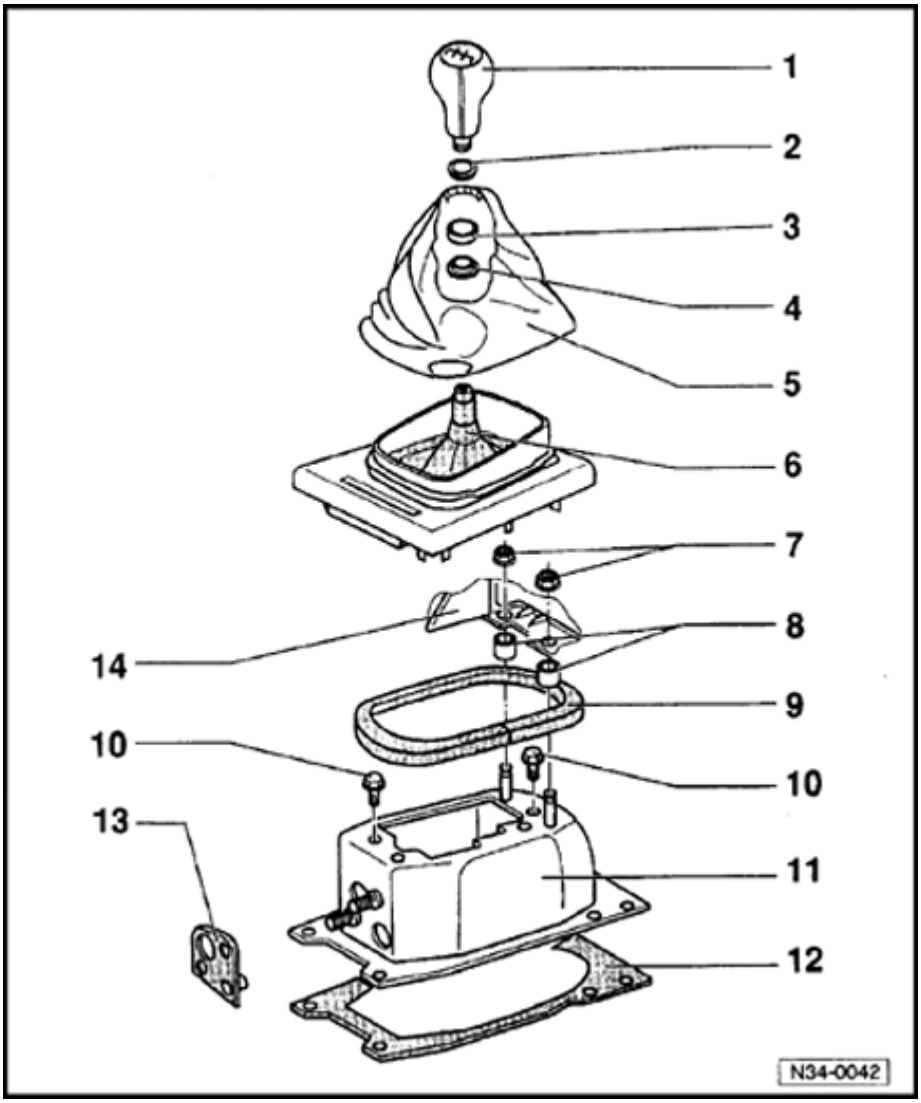

9 - Gasket

- Between gear stick housing and floor
- Self-adhesive
- Attach to gear stick housing

10 - Hexagon bolt, 15 Nm

- For mounting plate to gear stick housing

11 - Gearshift housing

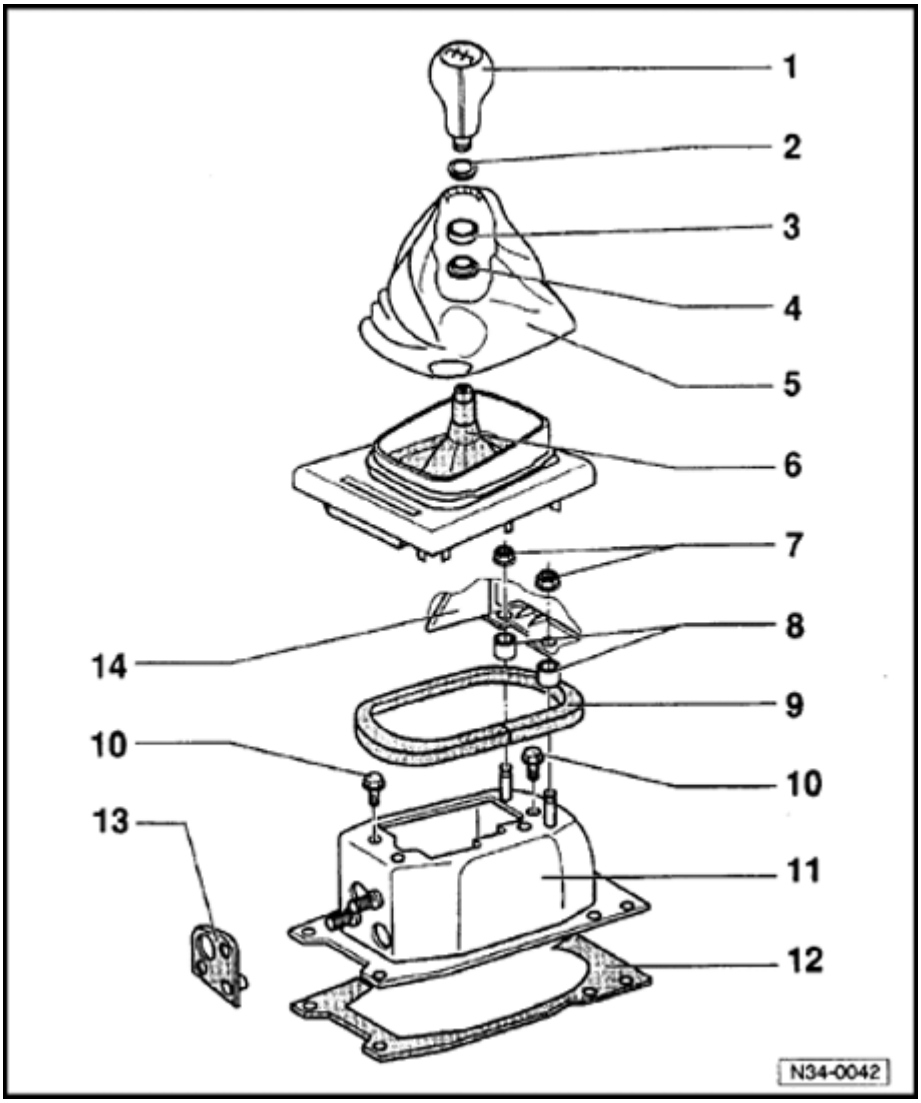

12 - Gasket

- Self-adhesive
- Attach to underside of gear stick housing

13 - Gasket

- Between selector cables and gear stick housing

14 - Central console

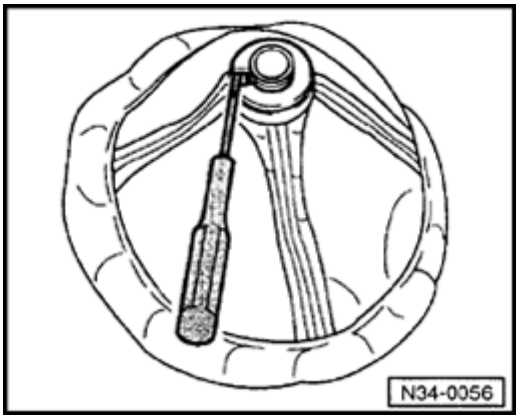

Fig. 1 Shift lever boot, removing

- Turn boot inside out.
- Pry off spring collar with a screwdriver.
- Remove retaining collar.

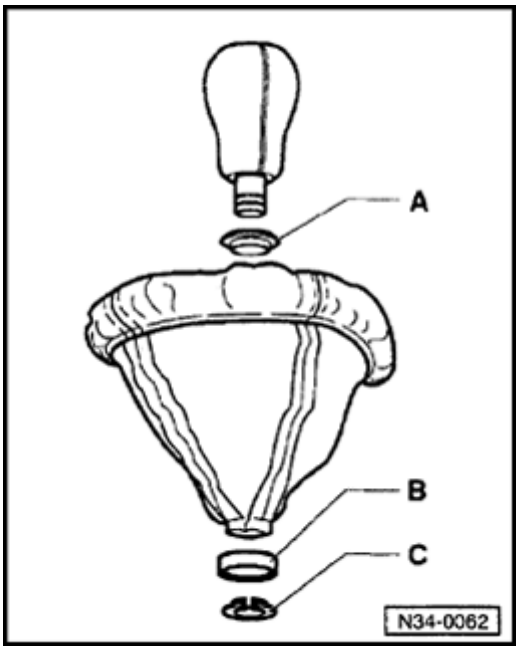

Fig. 2 Shift lever boot, installing

- Turn boot inside out.
- Insert collar -A- and clamp boot with retaining collar -B-.

Installation position: Retaining collar shoulder towards spring collar.

- Install shift knob and clip spring collar -C- into shift knob inner groove.
- Install boot over rubber cover to frame.

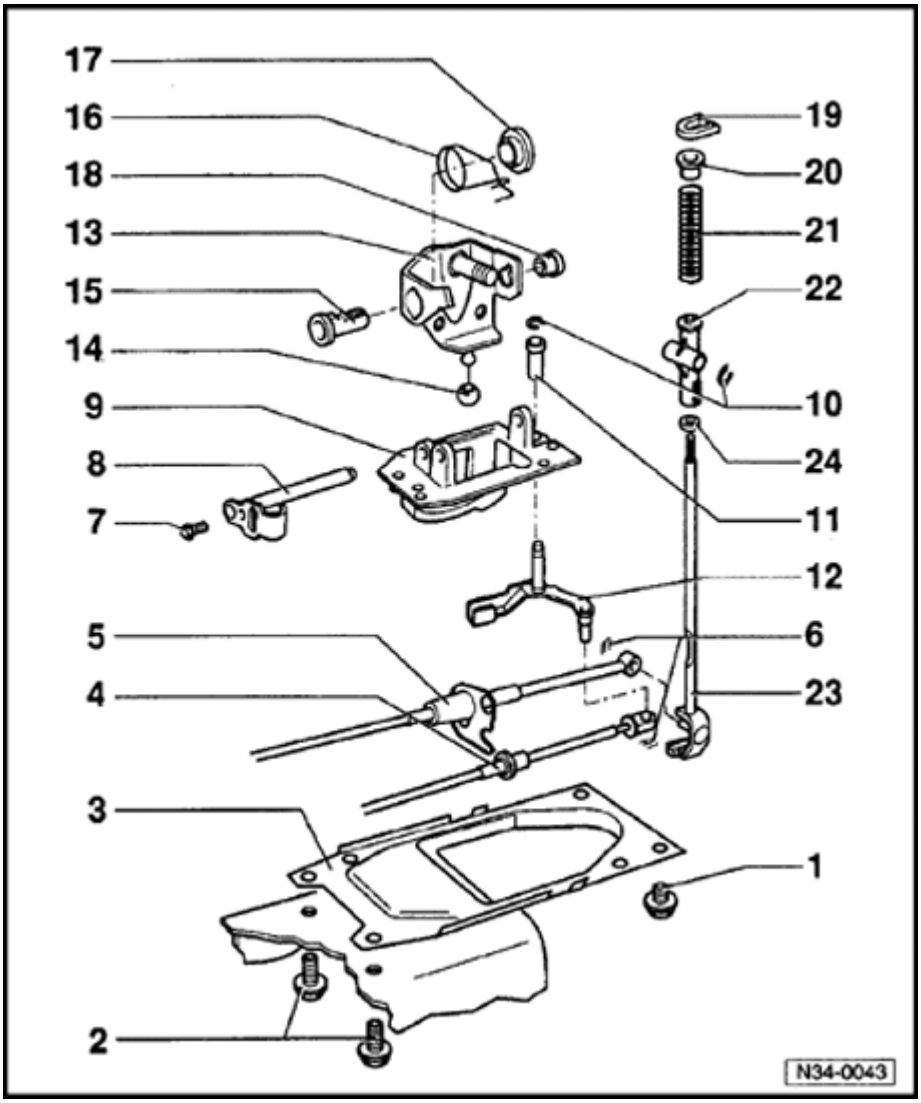

Shift lever, removing and installing

1 - Hexagon bolt, 25 Nm

- For gear stick housing to body

2 - Hexagon bolt, 25 Nm

- For gear stick housing to body

3 - Cover plate

4 - Gate selector cable

- On gate selector bracket

5 - Gear selector cable

- On gear lever

6 - Spring clip

7 - Hexagon bolt, 15 Nm

- Mounts pivot pin -8- to mounting plate

8 - Pivot pin

34-15

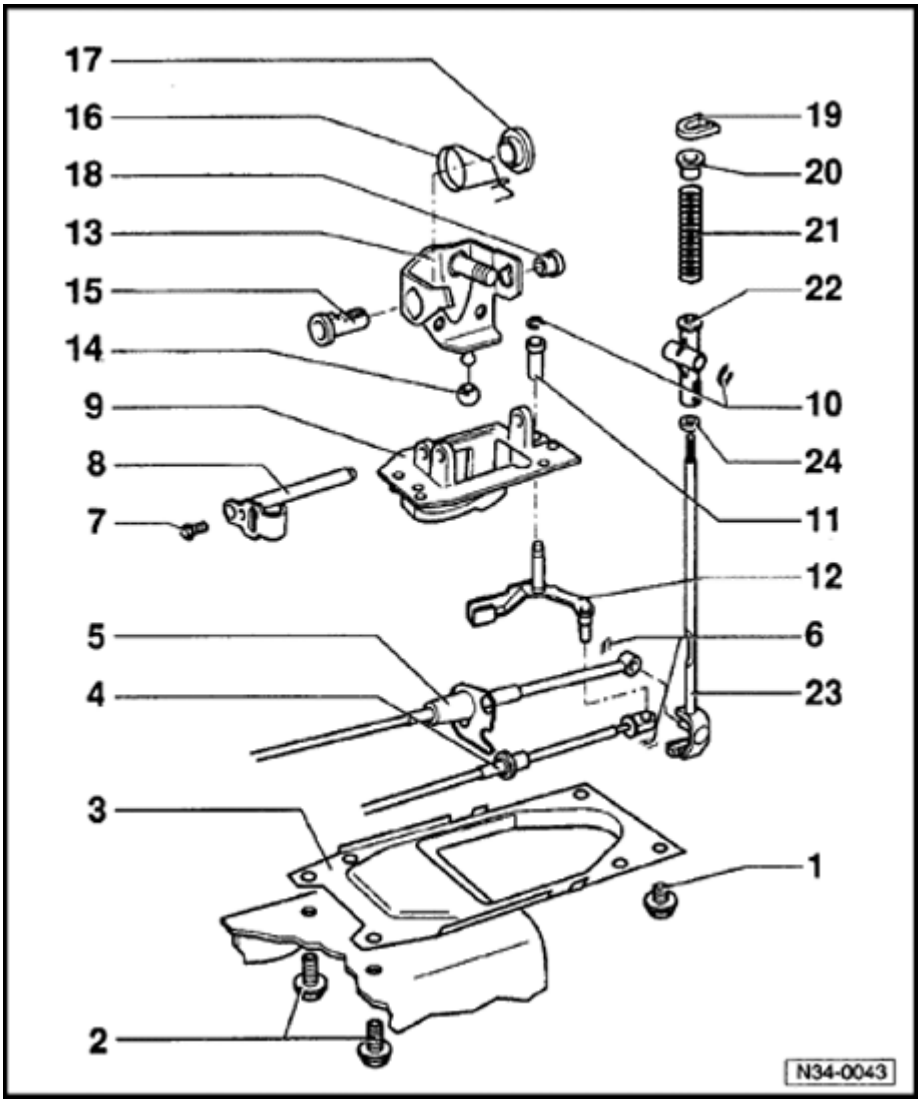

9 - Mounting plate

10 - Lock plate

- Removing ⇒ Fig. 3

11 - Bushing

- Only fits in one position

12 - Gate selector bracket

13 - Gate selector housing

- Fit into mounting plate after fitting the complete gear stick

14 - Cap

- Fitting ⇒ Fig. 1

15 - Bushing

16 - Spring

17 - Guide bushing

- Locate on bushing (item 15)

18 - Bushing

34-16

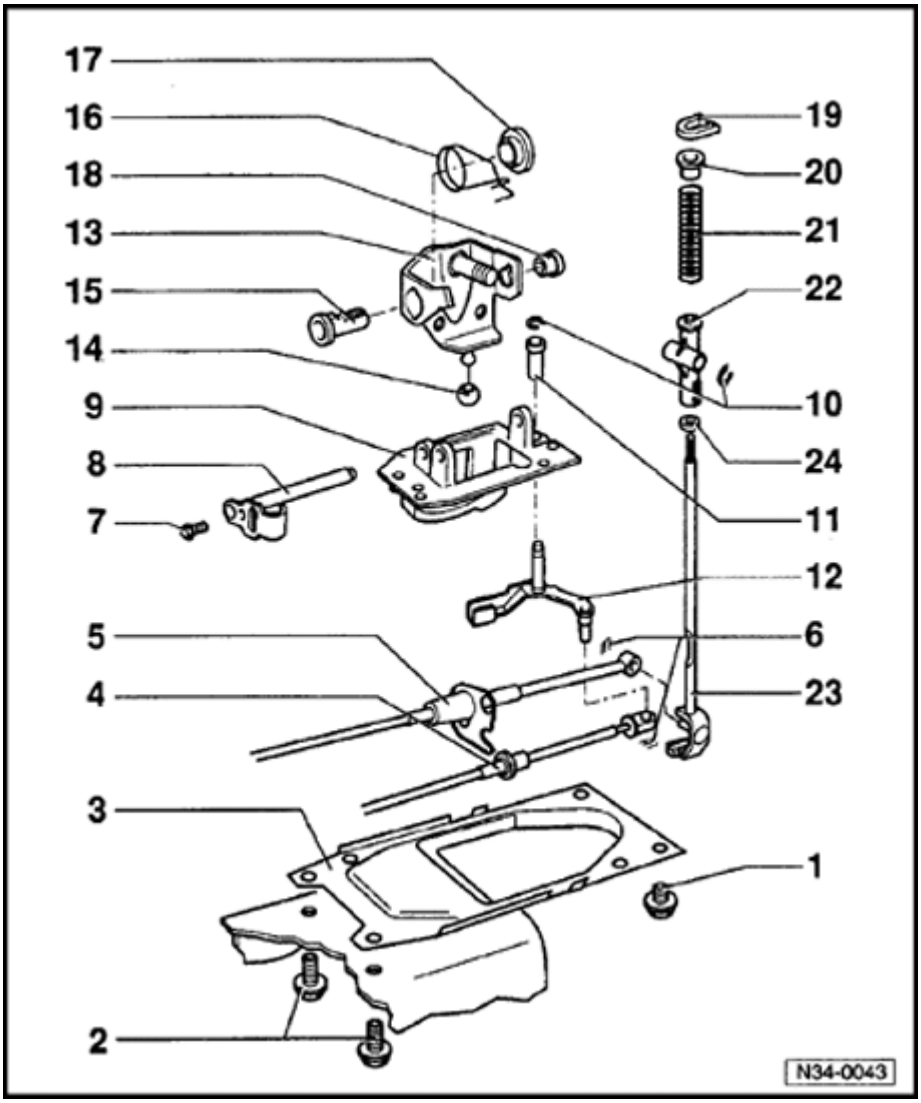

19 - Circlip

- Removing and installing ⇒ Fig. 2

20 - Spacer sleeve

21 - Spring

22 - Shift lever guide

23 - Shift lever

24 - Damping washer

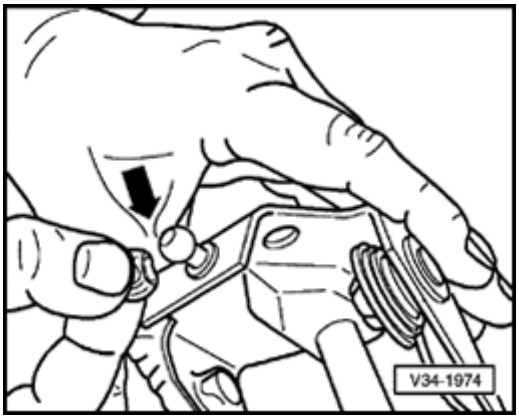

Fig. 1 Installing gate selector housing cap

- Press on from side (arrow 1).
- Press opening together to form a slot.

Note:

If necessary heat cap (e.g. hot water).

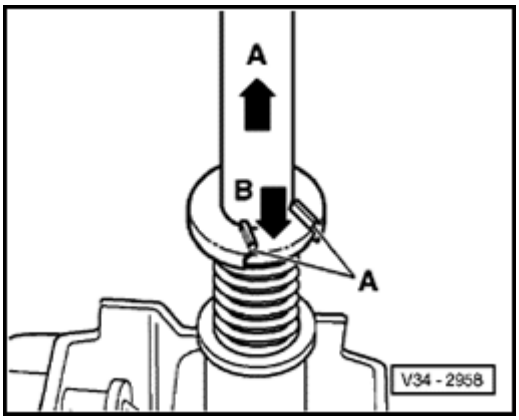

Fig. 2 Removing and installing circlip

- Pull shift lever in direction of arrow -A- and simultaneously use screwdriver to push spacer bushing in direction of arrow -B- to stop.

Note:

Do not tilt the spacer bushing when pushing down. The holding slot in the shift lever for the lock washer must remain accessible.

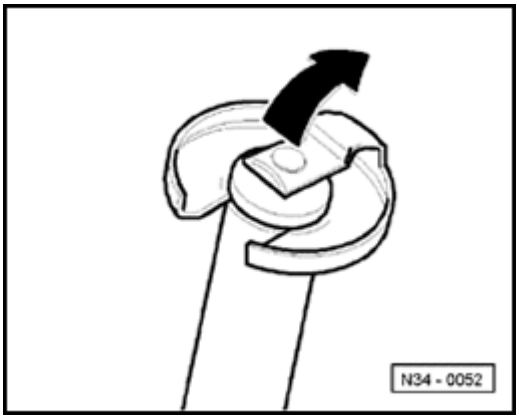

Fig. 3 Removing lock plate for selector bracket and shift lever guide/selector housing

- Lift clamp in direction of -arrow-.

Gear selector mechanism, adjusting

Transmission in neutral.

- Remove gear stick knob and boot ⇒ Page 34-10

- Remove balance weight ⇒ Page 34-8 .

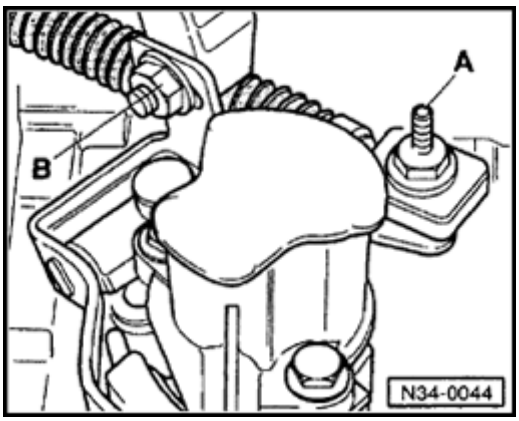

- Loosen bolt -A- and nut -B-, until the gear selector cable and actuating arm/gate selector cable are free to move in the elongated holes.

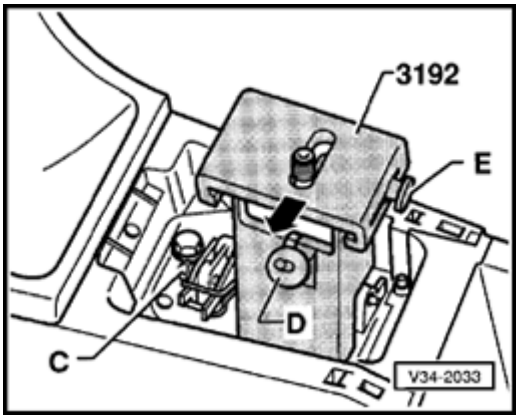

- Loosen bolt -C- .
- Install shift linkage gauge 3192.
- Pivot gauge mounting hook under mounting plate and tighten nut -D-.
- Press shift lever into left-hand detent of slide.
- Press shift lever and slide toward left (direction of -arrow-) to stop and tighten slide with bolt -E-.

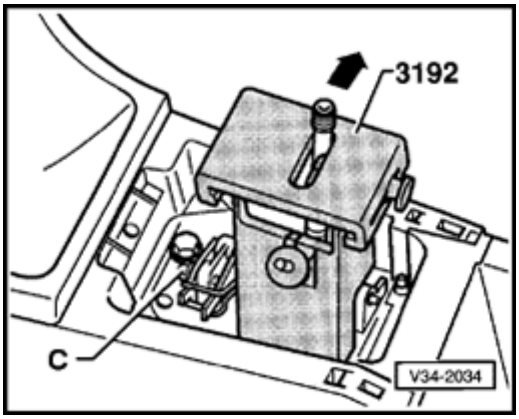

- Press shift lever toward right-hand detent (direction of arrow).
- Tighten bolt -C-.

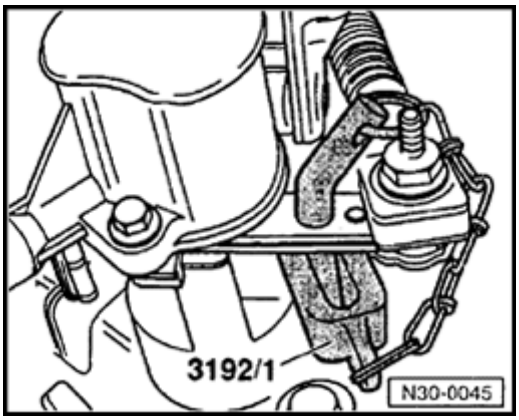

- Install wedge and pin.
- Slide wedge between gear selector lever and selector cover plate, ensuring no play.

CAUTION!

Installing the wedge must not lift the transmission gearshift lever.

- In this position secure gear selector cable and actuating arm/gate selector cable, and check position of wedge.
- Remove shift linkage gauge 3192.
- Install shift lever and boot ⇒ Page 34-10 .

Functional check

Requirements

- Transmission in neutral
- Shift lever must rest in 3rd gear (3GR)/4th gear (4GR) gate

- Depress clutch pedal and start engine.
- Wait approximately 3-6 seconds, to allow transmission input shaft to come to a standstill.
- Select each gear several times, checking all gears. Pay particular attention to operation of reverse gear pawl.

Should a gear fail to engage smoothly after repeated selection, the selector shaft play (lift) should be checked as follows:

- Select 1st gear.
- Press shift lever to left, to stop, then release. At same time observe selector shaft on transmission.
  - Requires help of a second technician.

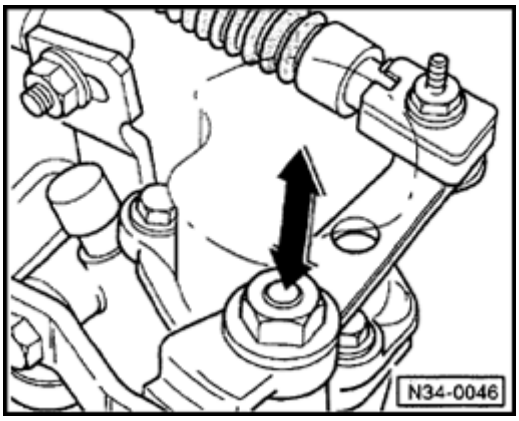

- When moving the shift lever the selector shaft must move approx. 1 mm (in direction of arrow).

If not:

- Disengage 1st gear.

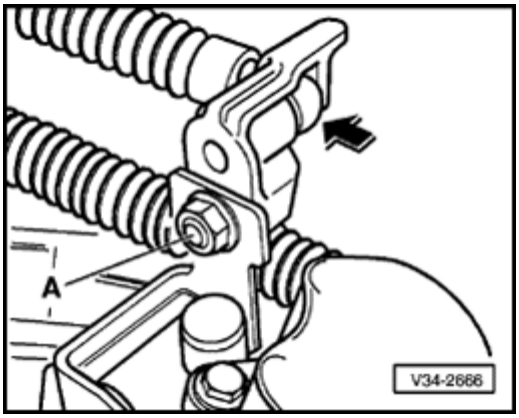

- Loosen nut -A- at actuating arm/gate selector cable mounting.

♦ Gate selector cable has some play at mounting due to transfer elements-minimal play at mounting is normal

- Take up gate selector cable play, by lightly pressing the mounting towards the bulkhead (direction of arrow).
- Tighten nut -A- in this position.

CAUTION!

Achieving a correct adjustment of the gear selector mechanism requires the following:

- ***Shift linkage and transfer elements operating correctly***
- ***Rubber bushings (for mounting the selector cables to all operating elements) in good condition (not worn)***
- ***Selector cables operate smoothly***
- ***Transmission, clutch and clutch release mechanism in good condition***

Transmission, removing and installing (vehicles with 4-cylinder engine)

Removing

- Disconnect Battery Ground (GND) strap and remove Battery.

CAUTION!

On vehicles equipped with an anti-theft radio, make sure you know the correct radio activation code before disconnecting the battery.

- Remove radiator cover.

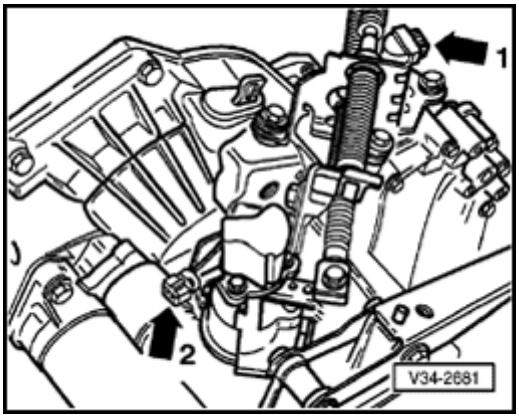

- Disconnect harness connectors from Speedometer Vehicle Speed Sensor (VSS) (G22) -arrow 1- and Back-Up Light Switch (F4) -arrow 2-.
- Disconnect all other electrical connections and Ground (GND) cables from transmission and from engine/transmission mounting bolts.

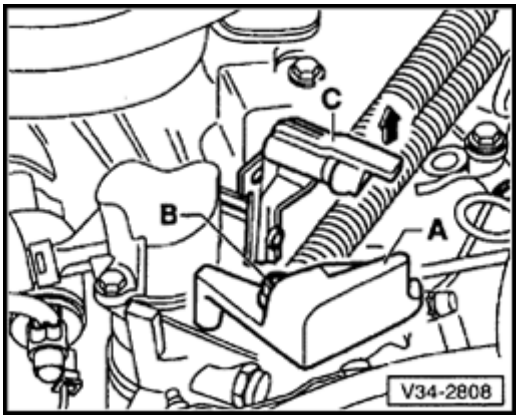

- Remove balance weight -A- and gear selector cable -B- from gear selector lever.
- Remove hexagon bolt with threaded sleeve from shift lever.
- Remove gear selector cable along with washer and square self-locking nut (always replace).
- Disconnect gate selector cable from actuating arm/relay lever -C- by lifting lug in direction of -arrow-.

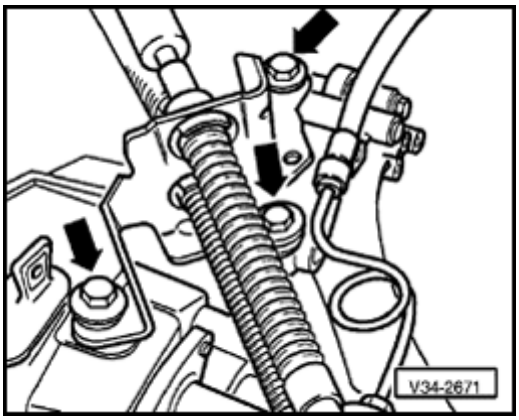

- Remove cable bracket support (-arrows-) from transmission; if necessary unclip hose at cable support bracket first.

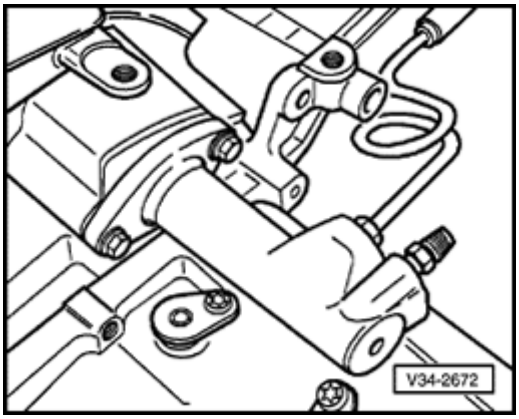

- Remove clutch slave cylinder and lay to one side.

♦ Secure with wire

CAUTION!

- ***DO NOT disconnect brake line or otherwise open clutch hydraulic system.***
- ***DO NOT depress the clutch pedal.***

- Remove intake air duct between Air Cleaner (ACL) and intake air elbow.

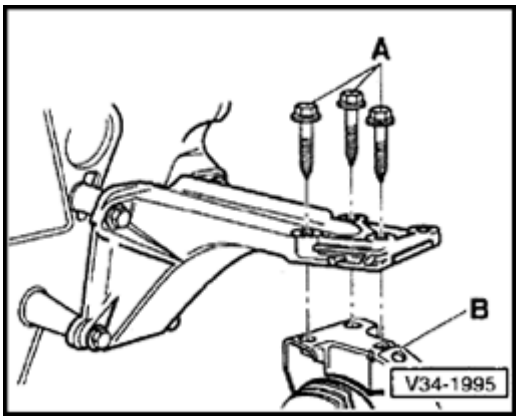

- Remove three bolts -A- from right-side engine mount -B-; first remove connector mounting plate if installed.

- Remove Ground (GND) strap at engine/transmission upper mounting bolt.

- Remove upper rear engine/transmission mounting bolts, and loosen front mounting bolts.

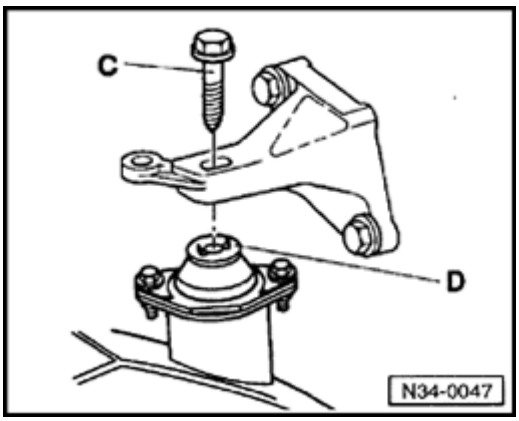

- Remove hex bolt -C- from left-side transmission mount -D-.
- If installed, remove coolant hose retaining bracket, coolant pipe, and electrical connector mounting plate from front bracket.

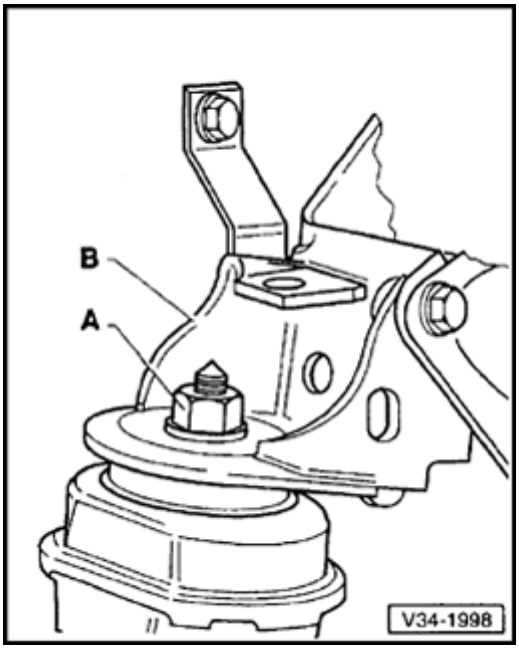

- Remove nuts -A- for front bracket -B-.

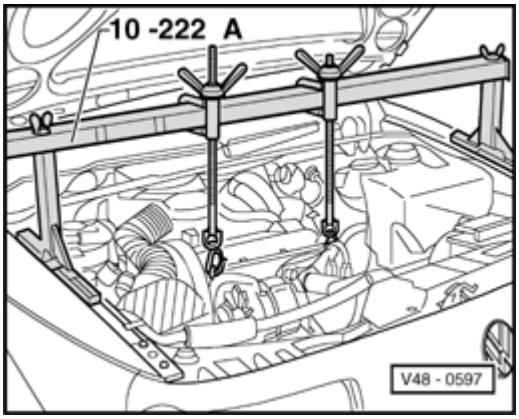

- Mount engine support bridge 10-222A with legs 10-222 A/1.

WARNING!

The legs 10- A/1 are designed for the inclination of the bodywork. If the earlier type legs are used, there is risk of an accident.

- Tighten support bridge assembly to take up weight of engine/transmission assembly via spindles.
- If not already removed, remove wiring and cable from transmission.
- Remove sound insulation pan below engine/transmission assembly, if installed.
- Remove starter ⇒ *Repair Manual, Electrical Equipment, Repair Group 27* .
- Remove power steering line bracket from transmission.
- Remove front bracket.

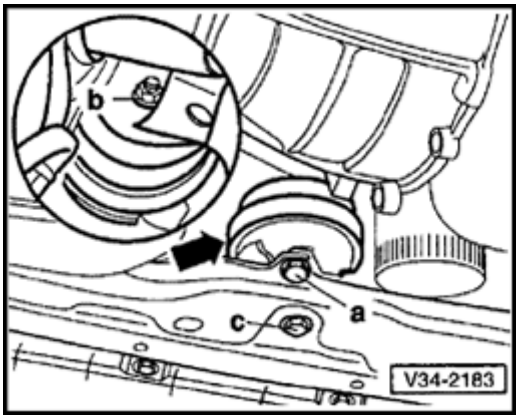

- Remove front engine mount by removing bolts -a- and -c- (nut -b- removed earlier).

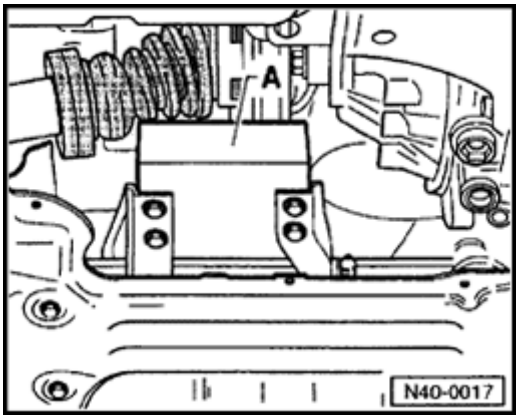

- Remove balance weight -A- from subframe. Mark installed position.
- Disconnect exhaust system in front of Three Way Catalytic Converter (TWC) ⇒ *Repair Manual, 2.0 Liter 4-Cyl. 2V Engine Mechanical, Engine Code (s): ABA m.y. 1995, Repair Group 26* .
- Remove right-side inner CV joint protective cover from engine, if installed.

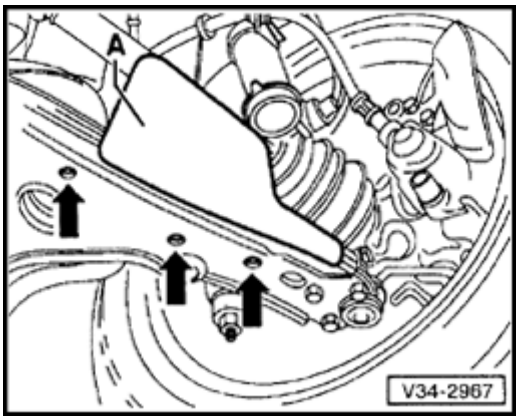

- Remove left-side air deflector -A- by driving clips out through holes in control arm -arrows- using a drift.
- Disconnect axle shafts from axle flanges, turn steering to full-left lock.
- Push engine/transmission assembly as far forwards as possible, if necessary with help of a second mechanic.
- Tie-up right-hand drive shaft as high as possible.
- Tie-up left-hand drive shaft forwards on control arm.

CAUTION!

DO NOT damage axle shaft surface protection.

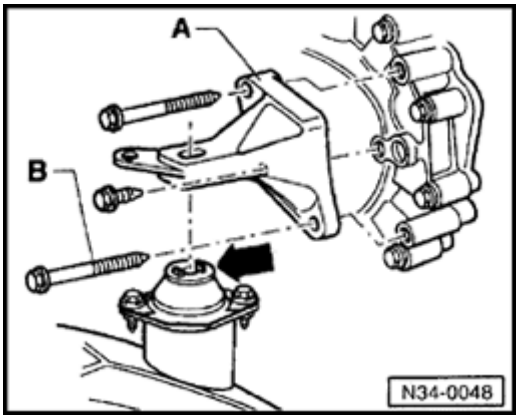

- Remove transmission bracket -A- from transmission. To do so, remove bracket mounting bolt -B- as follows:
- Using both engine support adapter spindles, lift engine/transmission assembly until exhaust system just contacts heat shield.

CAUTION!

Make sure that the selector cable support bracket is not jammed.

- Push engine/transmission assembly forward (requires help of second technician) and remove lower transmission bracket mounting bolt -B-.
- Then tie axle shaft up as high as possible, making sure that there is sufficient clearance between the CV joint and the axle flange.

CAUTION!

DO NOT damage power steering hose.

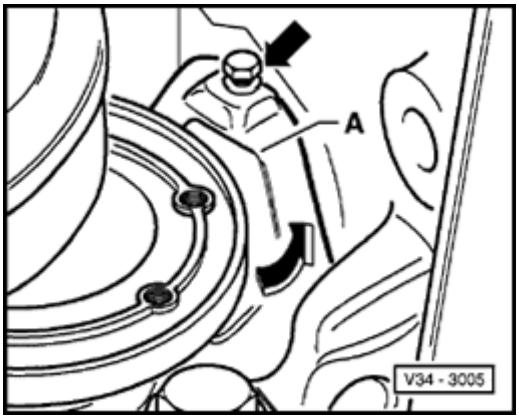

- Remove flywheel small cover plate -A- behind the right-hand flanged shaft (arrows).
- Remove large flywheel cover plate.
- Using both engine support adapter spindles, lower engine/transmission assembly back to previous position, then push as far as possible toward right and lower engine using left spindle.

- Remove lower engine/transmission securing bolt.

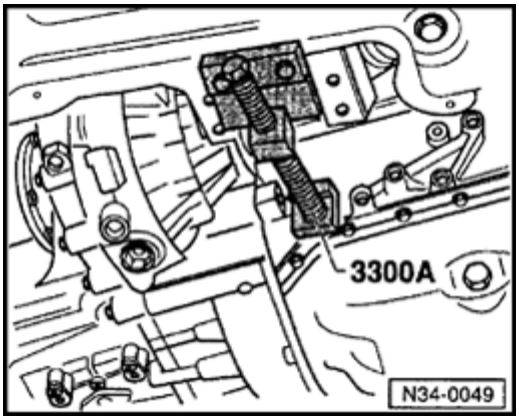

- Set up press tool 3300 A .
- Press engine and transmission forwards.

CAUTION!

DO NOT damage power steering lines.

- Remove forward bolt from upper engine/transmission support.
- Assemble transmission jack with transmission support 3282 and 02A transmission adjustment plate 3282/8 with support elements, as follows:
- Place adjustment plate 3282/8 on transmission support 3282. (Adjustment plate only fits in one position).
- Align arms of transmission support according to holes in adjustment plate.

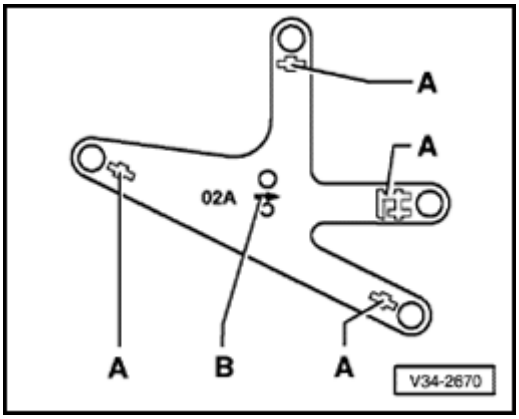

- Bolt on support elements -A-, as illustrated on adjustment plate.

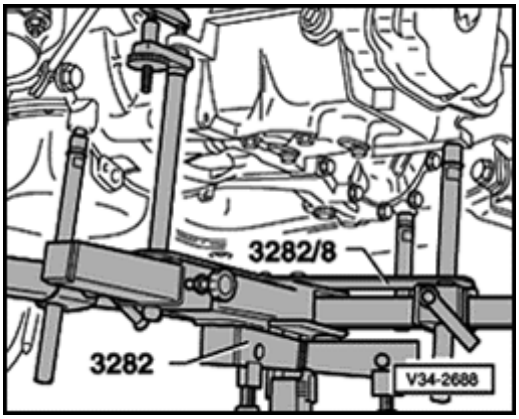

- Place transmission jack under vehicle, arrow symbol -B- (⇒ Illustration V34-2670 on ⇒ Page 34-30) on adjustment plate points to front of vehicle.
- Align adjustment plate parallel to transmission and lock safety supports on transmission.
- Press transmission off dowels and lower carefully while pushing engine/transmission assembly forward slightly and constantly correct the position via the transmission jack spindles.

CAUTION!

While lowering transmission, DO NOT damage power steering lines.

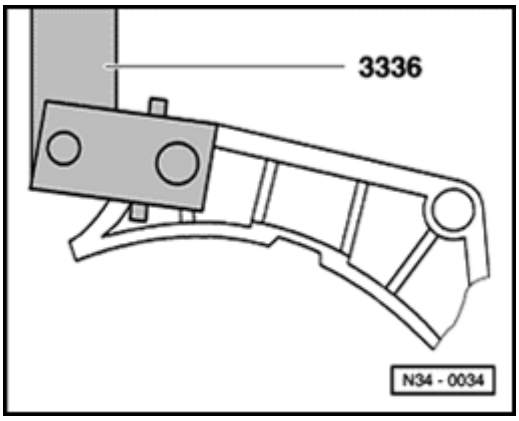

- Attach transmission lifting device 3336 to clutch housing.

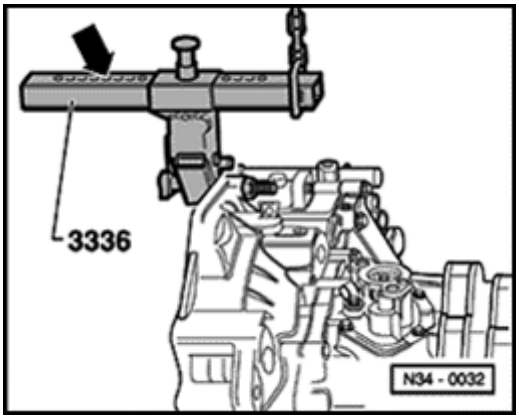

- Set support arm on sliding piece with locking pin (arrow).

Number of holes visible = 5

- Take transmission out with workshop crane and transmission lifting device 3336
- Place transmission where necessary for repairs or transport.

Installing

The transmission is installed in the reverse order of removal. Make sure that engine/transmission mounts are installed so that they are free of stress. ⇒ *Repair Manual, 2.0 Liter 4-Cyl. 2V Engine Mechanical, Engine Code(s): ABA m.y. 1995, Repair Group 10* .

Notes:

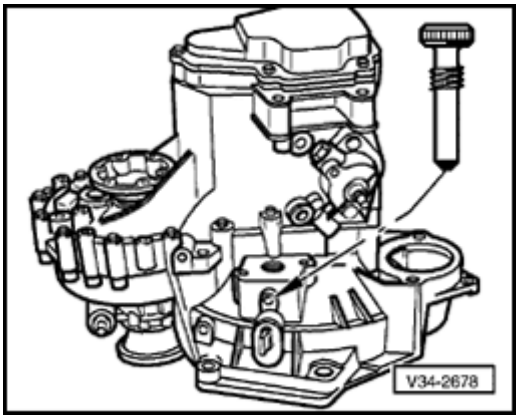

- *Before installing the transmission, press the clutch release lever toward the transmission housing and secure it with an assembly pin or a M8 x 35 bolt. Remove the bolt once the transmission is installed. The hole is then occupied and sealed by the 3rd cable support bracket mounting bolt.*

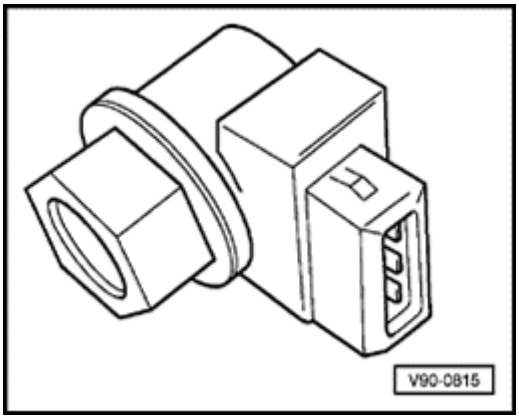

Notes:

- *If the transmission is being replaced, transfer the Speedometer Vehicle Speed Sensor (VSS) (G22), gear selector lever and relay lever from the old transmission to the new one.*
- *Clean input shaft splines and lightly grease with G000 100 grease.*
- *When replacing the transmission ensure that the intermediate plate is correctly positioned.*
- *Check whether dowel sleeves for aligning engine/transmission are fitted in cylinder block, install if necessary.*
- *Tie the left-side axle shaft up forward on the control arm before installing the transmission bracket. Make sure there is sufficient clearance between the CV joint and the axle shaft (may require the help of a second technician).*
- *Replacing drive axle shaft seal ⇒ Repair Manual, Suspension, Wheels, Brakes, Steering, Repair Group 40*
- *Installing starter/wiring ⇒ Repair Manual, Electrical Equipment, Repair Group 27*
- *Checking transmission oil ⇒ Page 34-49 .*
- *Adjust gear change linkage ⇒ Page 34-19 .*

34-34

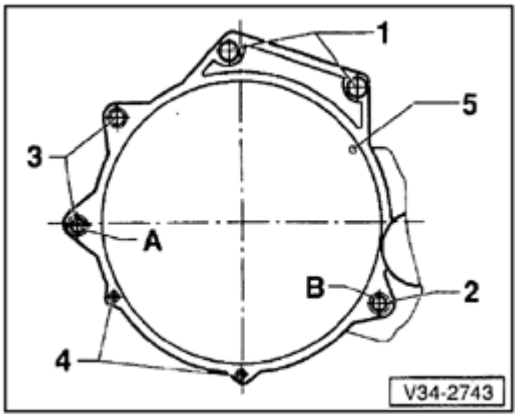

Tightening torques

Transmission to engine bolts

Pos.	Bolt	ty.	Spec.
1	M 12 x 55	2	80 Nm (59 ft lb)
2	M 12 x 64	1	80 Nm (59 ft lb)
3 1)	M 10 x 160	2	60 Nm (44 ft lb)
4 2)	M 7 x 12	2	10 Nm (7 ft lb)
5 3)	M 6 x 8	1	10 Nm (7 ft lb)

Note:

Items -A- and -B- are alignment dowel sleeves.

1) Also starter to transmission

2) Flywheel large cover plate

3) Flywheel small cover plate

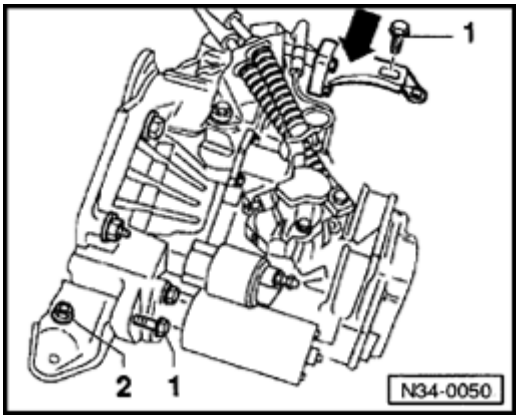

Transmission mounting bolts

Item	Bolt	ty.	Nm
1	M 10 x 45	2	50
Item	**Nut**	**ty.**	**Nm**
2	M 10 x 30	1	60

Left transmission bracket to transmission (arrow)	25 Nm
Right engine bracket to sub-frame	60 Nm

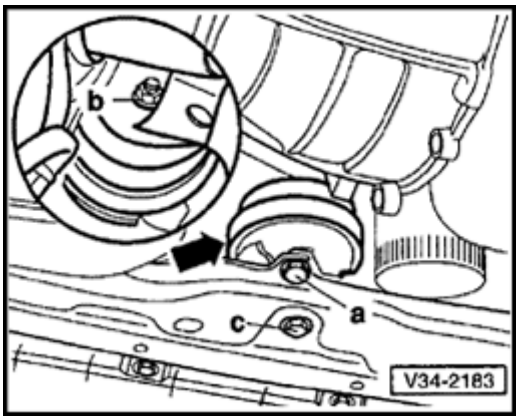

Front engine mounting to:

Engine sub-frame (bolt -a-)	30 Nm
Console (nut -b-) ⇒ assembly mounting (Item 2)	
Engine sub-frame (bolt -c-)	70 Nm

Axle shaft to axle flange: 45 Nm

Balance weight -A- to assembly carrier	30 Nm
Selector cable support bracket to transmission	25 Nm
Selector cable bolt to transmission selector lever	25 Nm
Balance weight to transmission selector lever	25 Nm

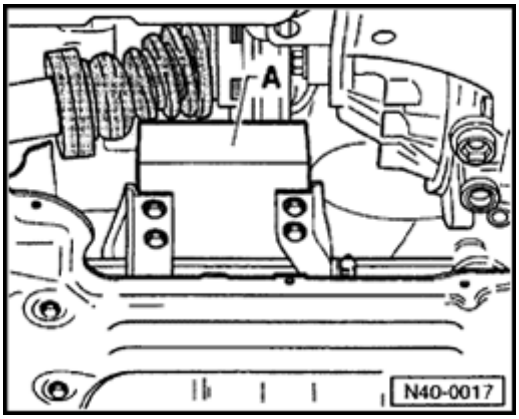

Transmission, removing and installing (vehicles with 6-cylinder engine)

Removing

- Disconnect Battery Ground (GND) strap and remove Battery.

CAUTION!

On vehicles equipped with an anti-theft radio, make sure you know the correct radio activation code before disconnecting the battery.

- Remove air filter upper section.
- Remove radiator cover.

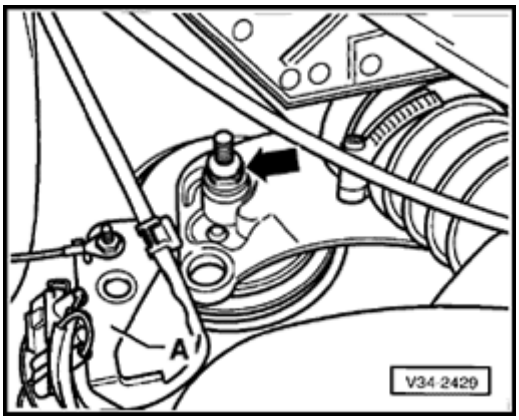

- Remove bolt (arrow) on engine console/sub-frame, right.
- Remove bracket -A- for harness connector, if applicable.
- Disconnect Ground (GND) strap from engine/transmission upper mount, if installed.

34-38

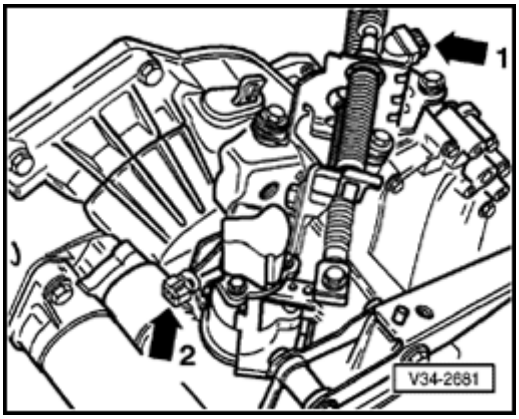

- Disconnect harness connectors from Speedometer Vehicle Speed Sensor (VSS) (G22) -arrow 1- and Back-Up Light Switch (F4) -arrow 2-.
- Disconnect all other electrical connections and Ground (GND) cables from transmission and from engine/transmission mounting bolts.

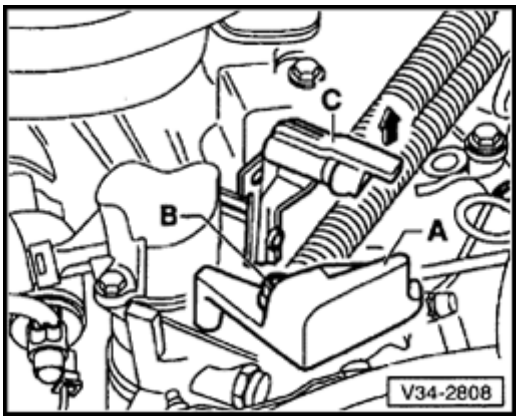

- Remove balance weight -A- and gear selector cable -B- from gear selector lever.
- Disconnect gate selector cable -C- at actuating arm/relay lever by pulling lug in direction of -arrow- .

- Unclip slave cylinder hose at cable support bracket.

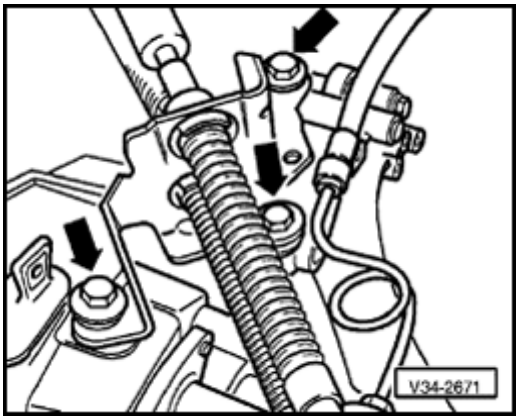

- Remove cable bracket bolts (-arrows-) at transmission.

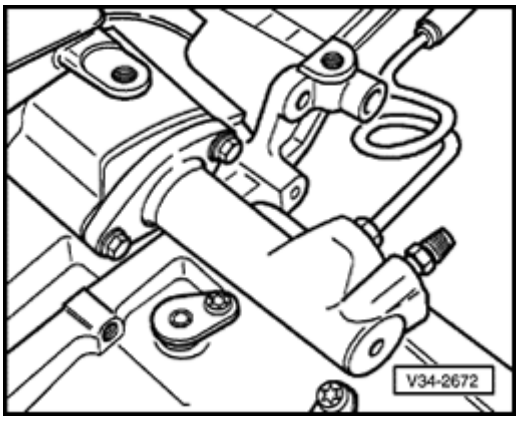

- Remove clutch slave cylinder and lay to one side.
  - Secure with wire

CAUTION!

DO NOT disconnect brake line or otherwise open clutch hydraulic system.

- Remove upper engine/transmission securing bolts.

- Remove coolant system expansion reservoir and lay to one side.

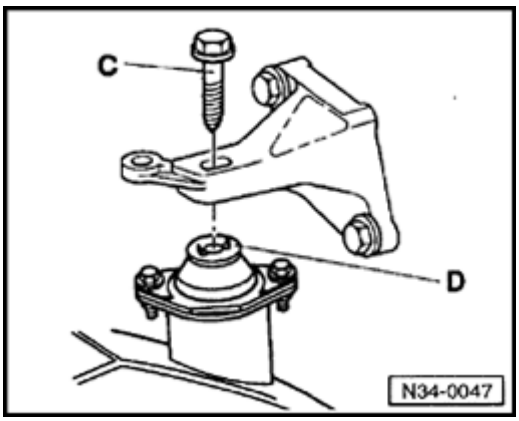

- Remove transmission hexagon bolt -C- transmission from left assembly mounting -D-.
- If installed, remove electrical connector securing plate from front console.

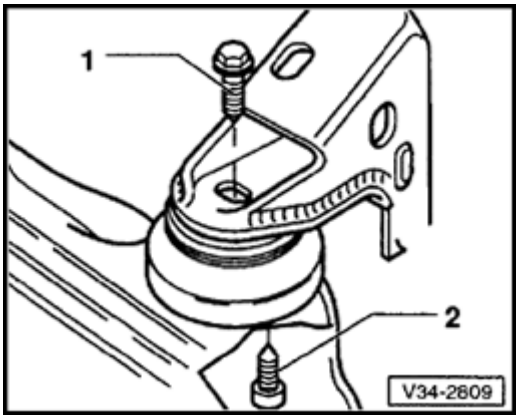

- Remove bolts -1- for console and -2- for assembly mounting.

34-41

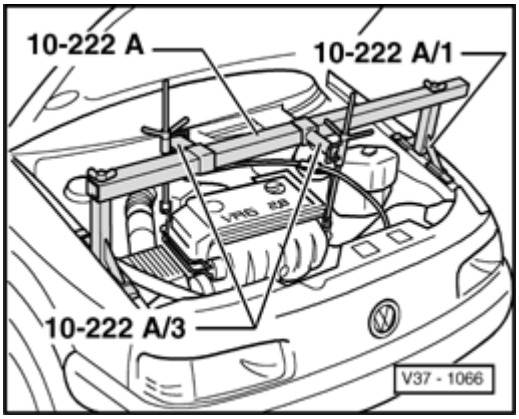

- Mount engine support bridge and adapter.

CAUTION!

Before installing the adapter hooks, disconnect all hoses and wiring in the vicinity of the engine lifting eyes, to prevent damage.

- Tighten support bridge assembly and take up weight of engine/transmission assembly via spindles.
- Remove lower belt guard for poly-ribbed belt.
- Remove sound insulation pan below engine/transmission assembly.
- Remove starter ⇒ *Repair Manual, Electrical Equipment, Repair Group 27* .

Note:

Before removing the lower starter securing bolt remove P.A.S. pipe retainer from transmission.

- Remove front console.

34-42

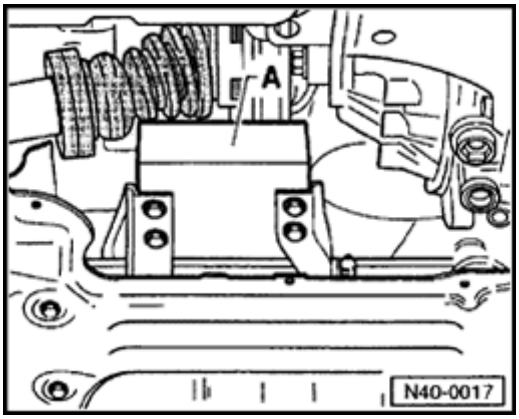

- Remove balance weight -A- from sub-frame.
- Disconnect exhaust system in front of Three Way Catalytic Converter (TWC) ⇒ *Repair Manual, 2.8 Liter VR6 2V Engine Mechanical, Engine Code(s): AAA, Repair Group 26* .
- Disconnect drive shafts from flanged shafts, turn steering to full left lock and tie-up drive shaft as high as possible.

CAUTION!

DO NOT damage axle shaft surface protection.

- Push engine/transmission assembly as far as possible to right.

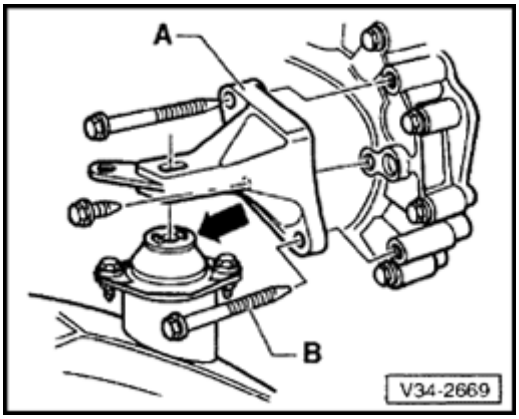

- Remove transmission console -A- from transmission.
- Using both engine support adapter spindles, lift engine/transmission assembly until exhaust system just contacts heat shield.

CAUTION!

Make sure that the selector cable support bracket is not jammed.

- Remove transmission bracket mounting bolt -B-.

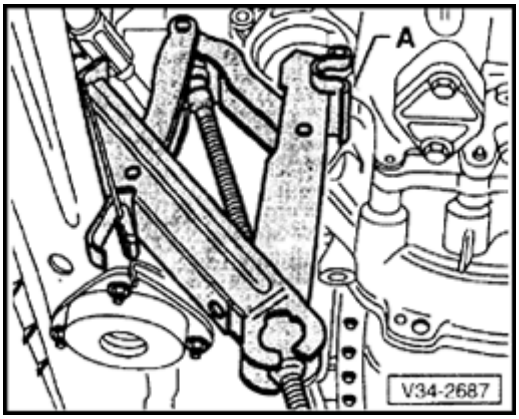

- Press engine/transmission assembly towards bulkhead using lug -A-.

CAUTION!

DO NOT damage power steering hose.

- Remove transmission console securing bolt -B- from below support (arrow ⇒ Fig. V34-2669 on ⇒ Page 34-42).
- Lower engine/transmission assembly via both spindles to previous position, then incline engine by turning left hand spindle.
- Remove clutch cover plate.
- Remove engine/transmission securing bolts above the right flanged shaft.
- Assemble transmission jack with transmission support 3282, adjustment plate 3282/8 for "02A" transmission and support elements as follows:
- Place adjustment plate 3282/8 on transmission support 3282.

♦ Adjustment plate only fits in one position.

- Align arms of transmission support according to holes in adjustment plate.

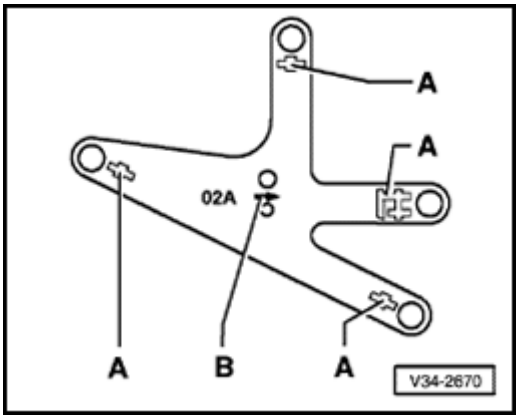

- Bolt on support elements -A-, as illustrated on adjustment plate.

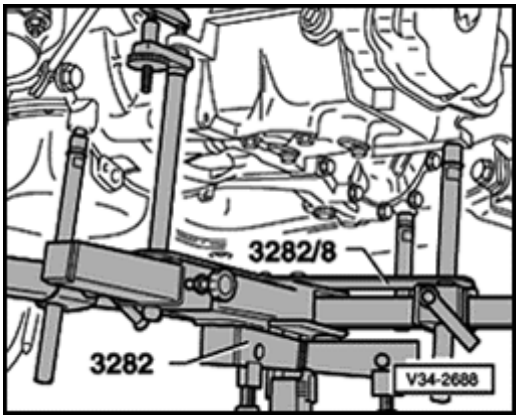

- Place transmission jack with transmission support under vehicle, arrow symbol -B-(⇒Illustration V34-2670 on ⇒ Page 34-43) on adjustment plate points to front of vehicle.
- Align adjustment plate parallel to transmission and lock safety supports on transmission.
- Remove lower engine/transmission securing bolt.
- Press transmission off dowel sleeves.

Note:

Transmission cover must lightly contact left-hand longitudinal member.

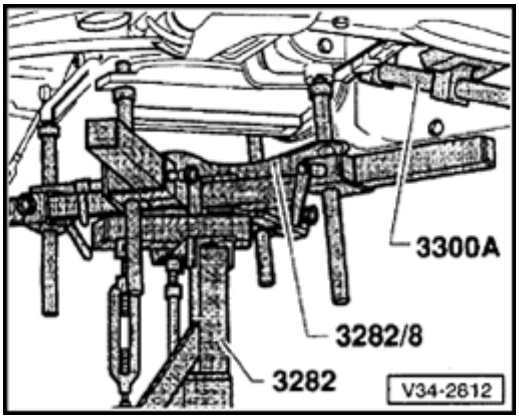

- Press engine forwards with support appliance 3300 until it just touches the engine sub-frame.
- Lower transmission, constantly adjusting position via the spindles on the transmission jack.

CAUTION!

While lowering transmission, DO NOT damage power steering lines.

34-45

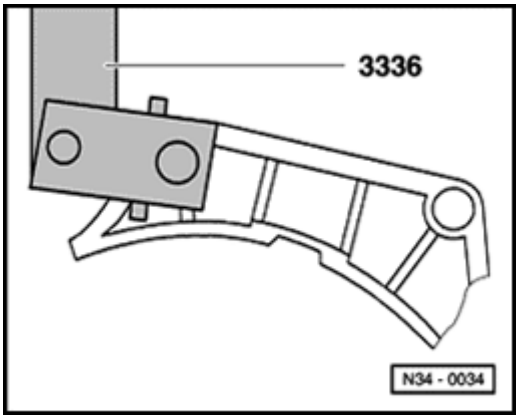

- Bolt transmission lifting device 3336 to clutch housing.
- Set support arm on sliding piece with locking pin (arrow).

Number of holes visible = 5

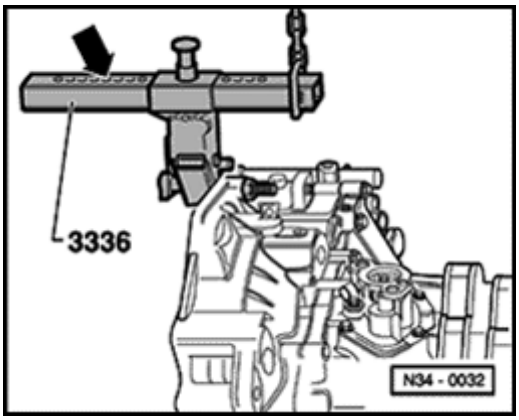

- Take transmission out with workshop crane and transmission lifting device 3336.
- Place transmission where necessary for repairs or transport.

Installing

- Transmission installation is carried out in the reverse sequence. When installing ensure engine/transmission mountings are installed stress-free. ⇒ *Repair Manual, 2.8 Liter VR6 2V Engine Mechanical, Engine Code(s): AAA, Repair Group 10* .

Note:

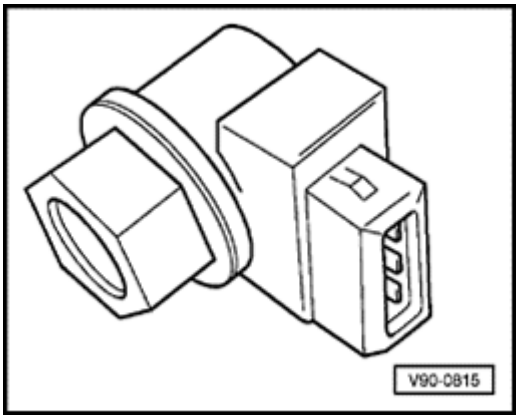

- *If the transmission is being replaced, transfer the Speedometer Vehicle Speed Sensor (VSS) (G22), gear selector lever and relay lever from the old transmission to the new one.*
- *Check whether dowel sleeves for aligning engine/transmission are fitted in cylinder block, install if necessary.*
- *Clean input shaft splines and lightly grease with G000 100 grease.*

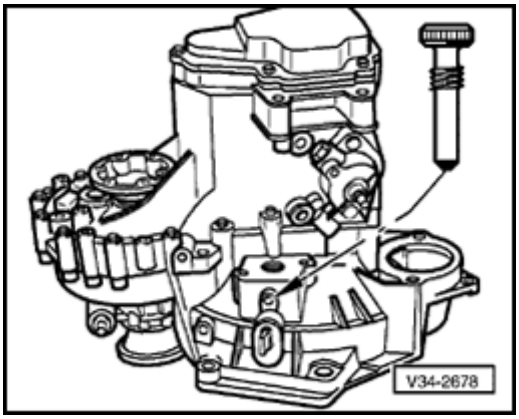

- *Before installing transmission press clutch release lever towards transmission housing and secure with assembly pin, assembly bolt or M 8 x 35 bolt. Remove after transmission has been installed. The hole will then be sealed by the 3rd cable support bracket securing bolt or plugged.*
- *Before joining transmission to engine remove support device 3300.*
- *Checking transmission oil* ⇒ *Page 34-49*
- *Adjust gear selector mechanism* ⇒ *Page 34-19*

34-47

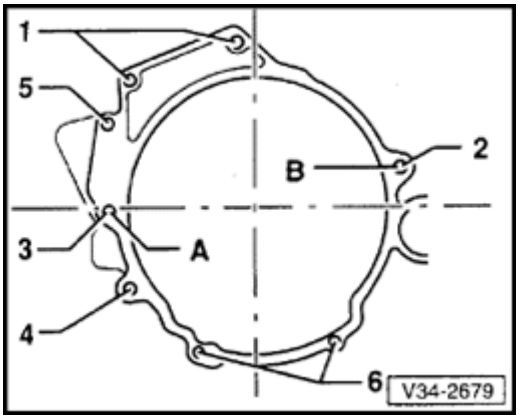

Tightening torques

Transmission to engine

Pos.	Bolt	ty.	Nm
1	M 12 x 55	2	80
2	M 12 x 62	1	80
3 1)	M 12 x 62	1	80
4	M 12 x 46	1	80
5 2)	M 10 x 160	1	60
6 3)	M 7 x 12	2	10

Lower starter to transmission securing bolt M 10 x 42
60 Nm

Note:

Items -A- and -B- are alignment dowel sleeves.

1) Also front console to transmission

2) Also starter and front console to transmission

3)Flywheel cover plate

34-48

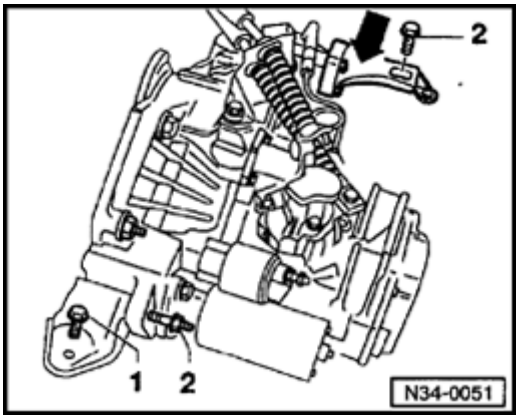

Transmission mounting bolts

Pos.	Bolt	ty.	Nm
1	M 10 x 30	1	50
2	M 10 x 45	2	50

Left transmission console to transmission (arrow)	25 Nm
Right engine console to sub-frame	60 Nm
Axle shaft to axle flange	45 Nm
Balance weight -A- to assembly carrier	30 Nm
Selector cable support bracket to transmission	25 Nm
Selector cable bolt to transmission selector lever	25 Nm
Balance weight to transmission selector lever	25 Nm

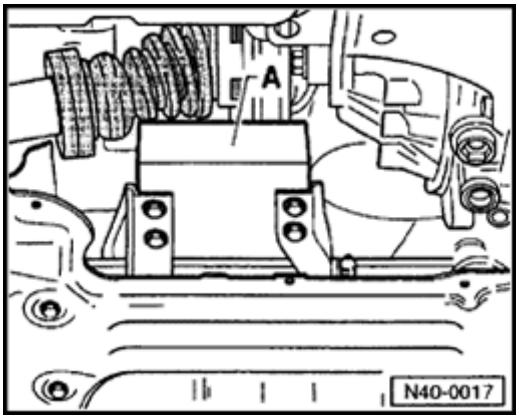

Transmission oil level, checking

Transmission oil specification ⇒ Page 00-3

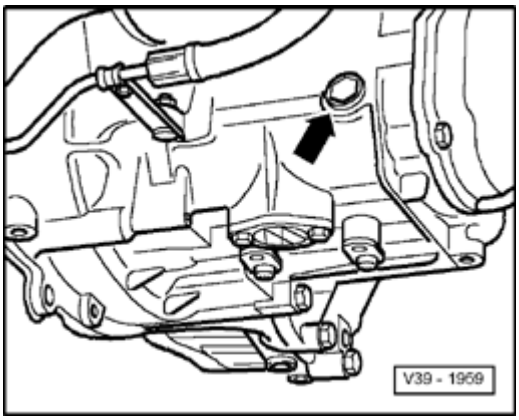

- Remove plug (arrow) to check oil

The oil level is correct when the transmission is full to the lower edge of the filler hole.

- Fit plug (arrow).

When filling with new oil note following:

- Remove plug (arrow).
- Top up oil to lower edge of filler hole.
- Fit plug (arrow).
- Start engine, engage gear and allow transmission to turn for approx. 2 minutes.
- Remove plug (arrow).
- Switch off engine and again top up oil to lower edge of filler hole.
- Fit plug (arrow).

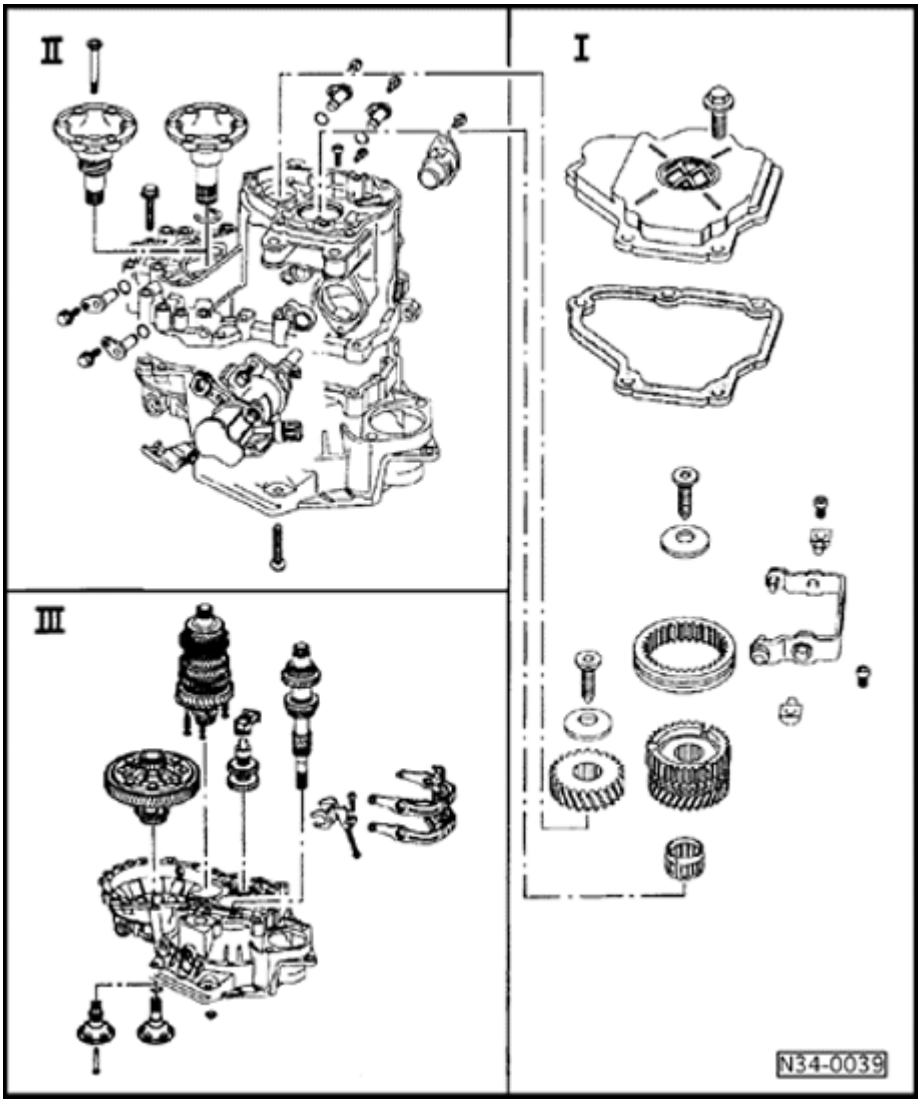

Transmission disassembly and assembly, overview

Sequence for dismantling and assembling ⇒ Page 34-60

I - Removing and installing cover for transmission housing and 5th gear ⇒ Page 34-51

II - Dismantling and assembling transmission housing and shift mechanism ⇒ Page 34-54

III - Dismantling and assembling input shaft, output shaft, differential and selector forks ⇒ Page 34-57

34-51

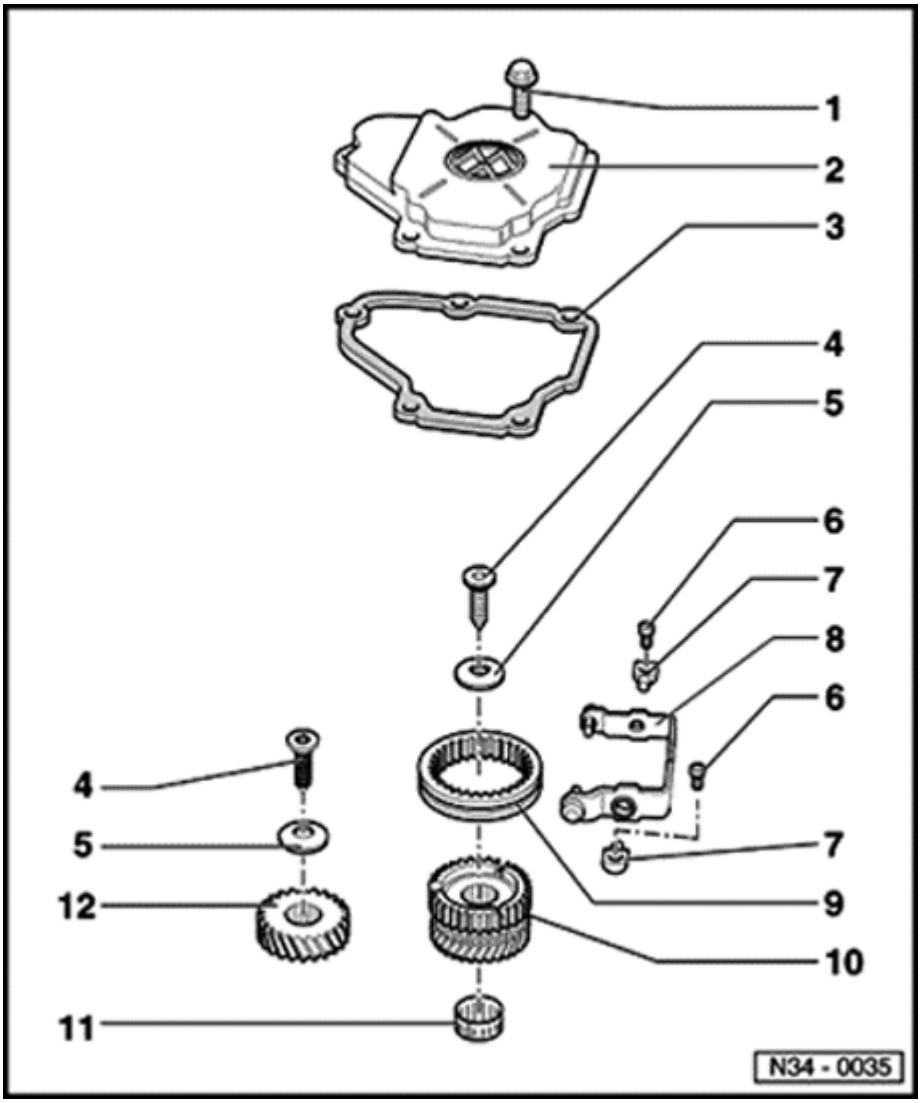

Transmission housing cover and 5th gear, removing/installing

1 - Hexagon bolt, 10 Nm

- For transmission housing cover

2 - Transmission housing cover

Note:

If the transmission cover is fitted with the transmission installed, check oil level as follows:

- Fill with oil up to lower edge of filler hole and fit filler plug.

- Start engine, engage gear and allow transmission to turn for approx. 2 minutes.

- Switch off engine and top up transmission oil to lower edge of filler hole again.

34-52

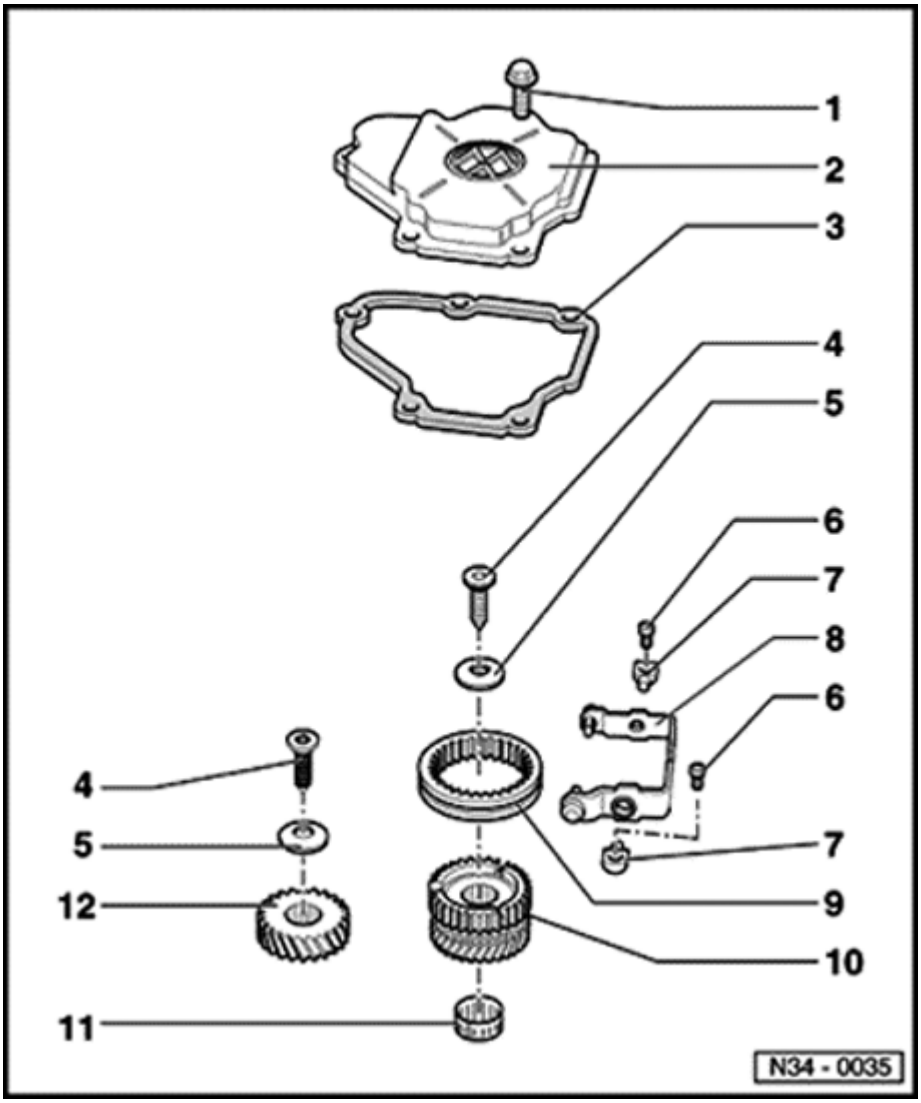

3 - Gasket

4 - Torx socket head bolt M10, 80 Nm

- Bolt head design holds Belleville spring -5- in place

5 - Belleville spring

- Installing ⇒ Page 34-75

6 - Socket head bolt, 25 Nm

- For pivot pin to transmission housing

7 - Pivot pin

8 - 5th gear shift fork

- Dismantling and assembling ⇒ Page 34-94
- Adjusting ⇒ Page 34-76

34-53

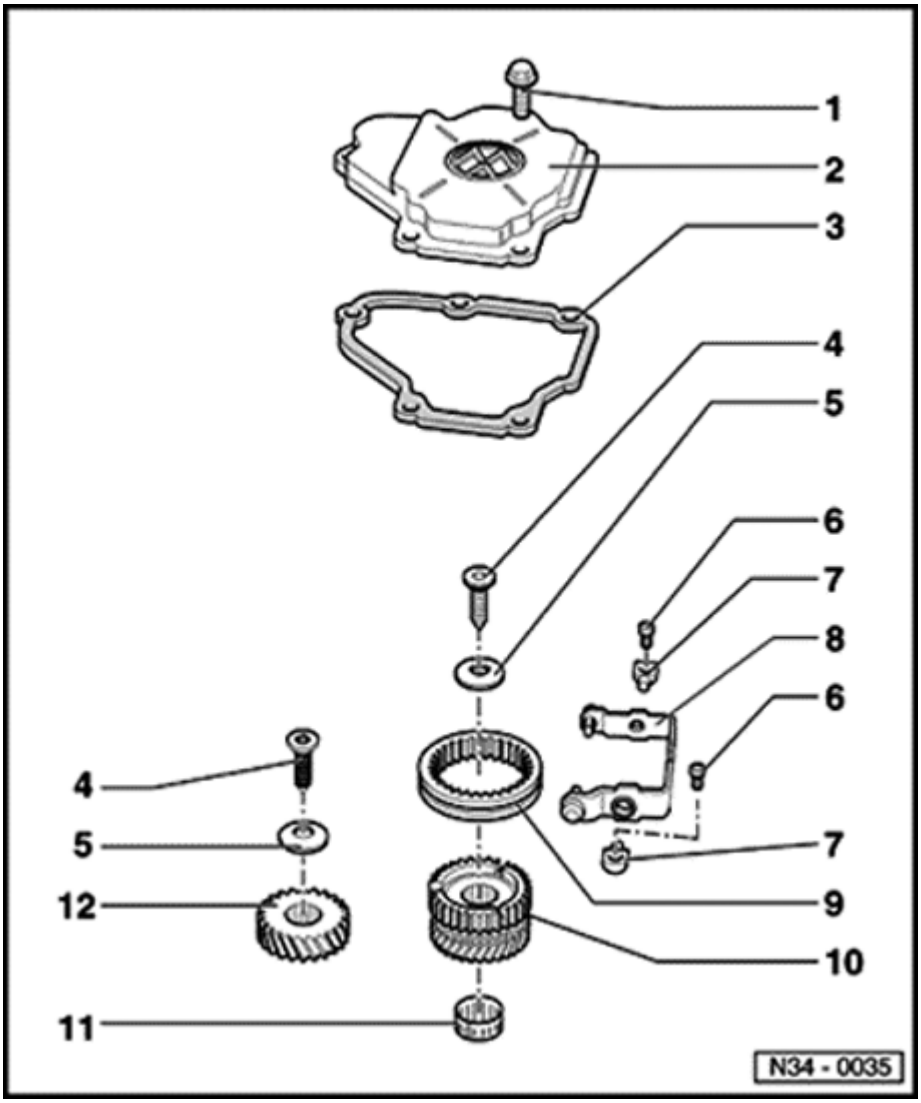

9 - Operating sleeve, 5th gear

- Installation position ⇒ Page 34-73
- Adjusting ⇒ Page 34-76

10 - Synchro-hub with 5th gear and synchronizing ring

- Dismantling and assembling ⇒ Page 35-11

11 - Needle bearing

12 - 5th gear

- Installation position ⇒ Page 34-72

34-54

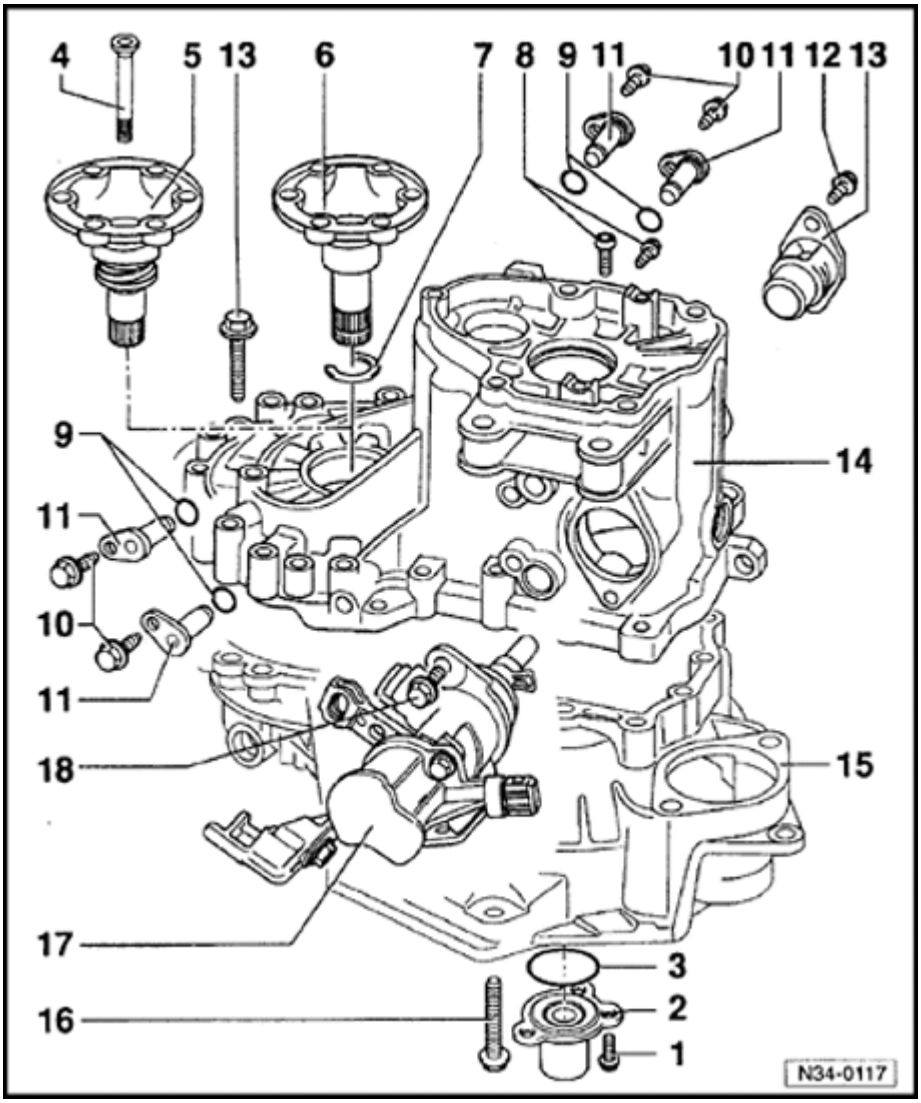

Transmission housing and selector mechanism, disassembling and assembling

1 - Socket head bolt

- Self-locking
- Always replace
- Tightening torque: 20 Nm (15 ft lb)

2 - Guide sleeve

- With seal for driveshaft
- Removing and installing seal ⇒ Page 34-87
- Remove guide sleeve to replace seal

3 - O-ring

- Always replace
- Place on guide sleeve and lubricate with multi-purpose grease

4 - Cone-head bolt

- Installed in transmissions with springs behind flange shaft

34-55

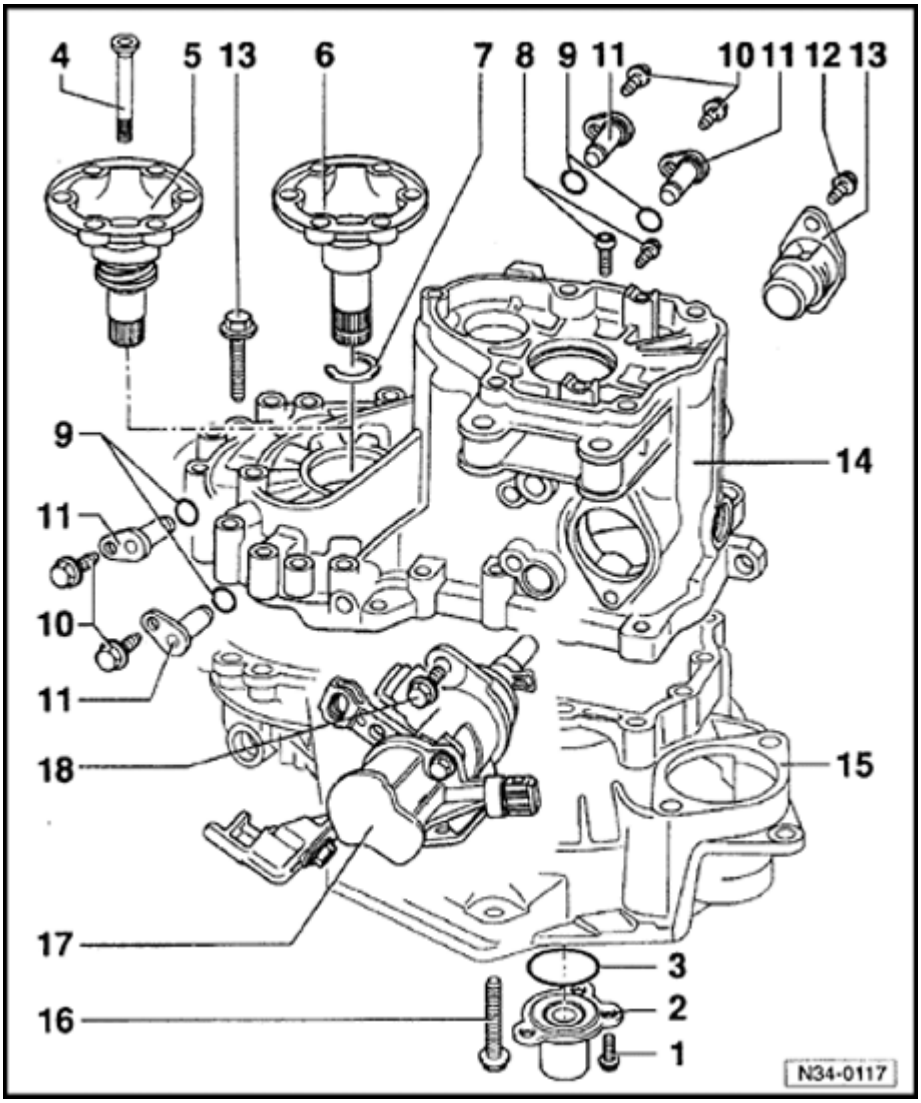

5 - Axle flange shaft with spring

- Removing and installing ⇒ Repair Group 39

6 - Axle flange shaft

- Secured with circlip
- Removing ⇒ Page 34-65
- Installing ⇒ Page 34-77
- Applications ⇒ Repair Group 39

7 - Circlip

- Always replace ⇒ Page 34-77

8 - Torx socket-head bolt, 30 Nm (22 ft lb)

- For reverse shaft support
- Self-locking
- Always replace

9 - O-ring

- Always replace

10 - Bolt, 25 Nm (18 ft lb)

11 - Pivot pin

34-56

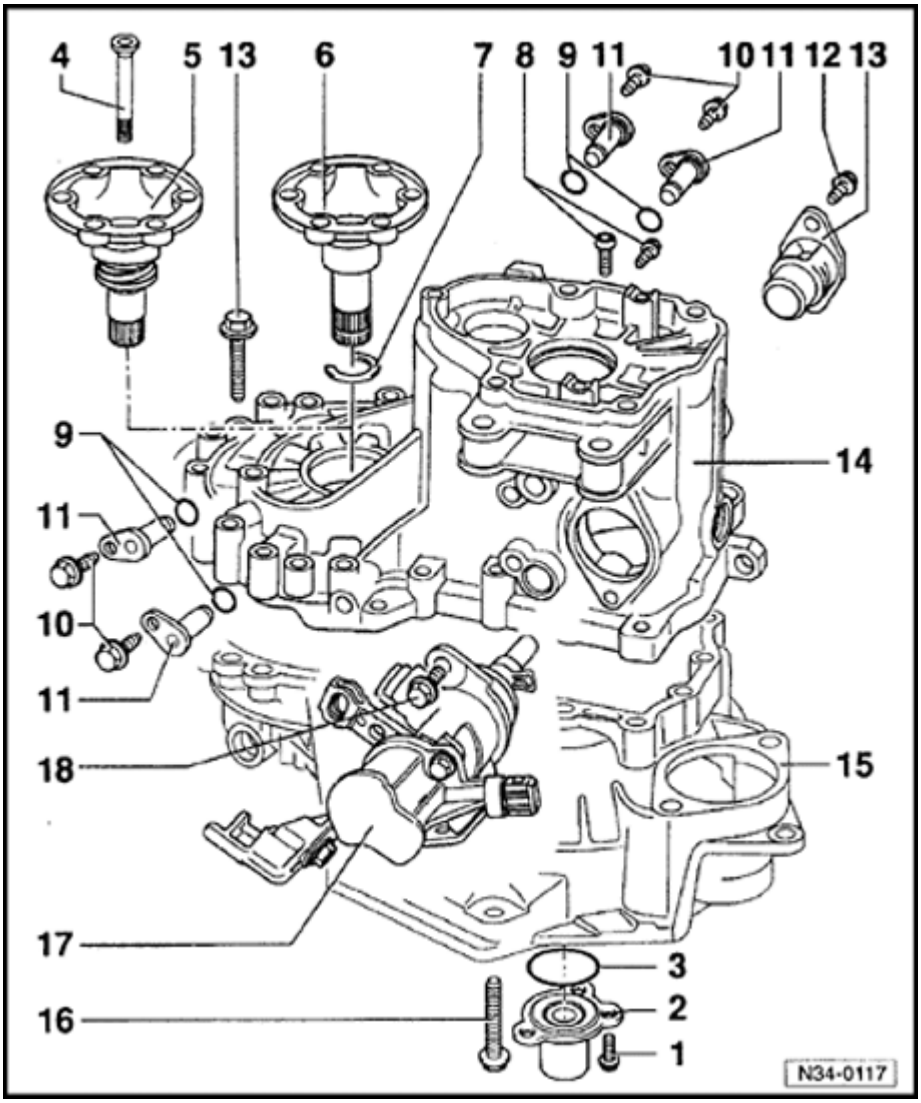

12 - Bolt, 25 Nm (18 ft lb)

13 - Cover plate

14 - Transmission housing

- Servicing ⇒ Page 34-78

15 - Clutch housing

- Servicing ⇒ Page 34-78

16 - Hexagon bolt, 25 Nm (18 ft lb) then turn 90° further

17 - Selector mechanism

- Disassembling and assembling from ⇒ Page 34-92

18 - Hexagon bolt, 25 Nm (18 ft lb)

34-57

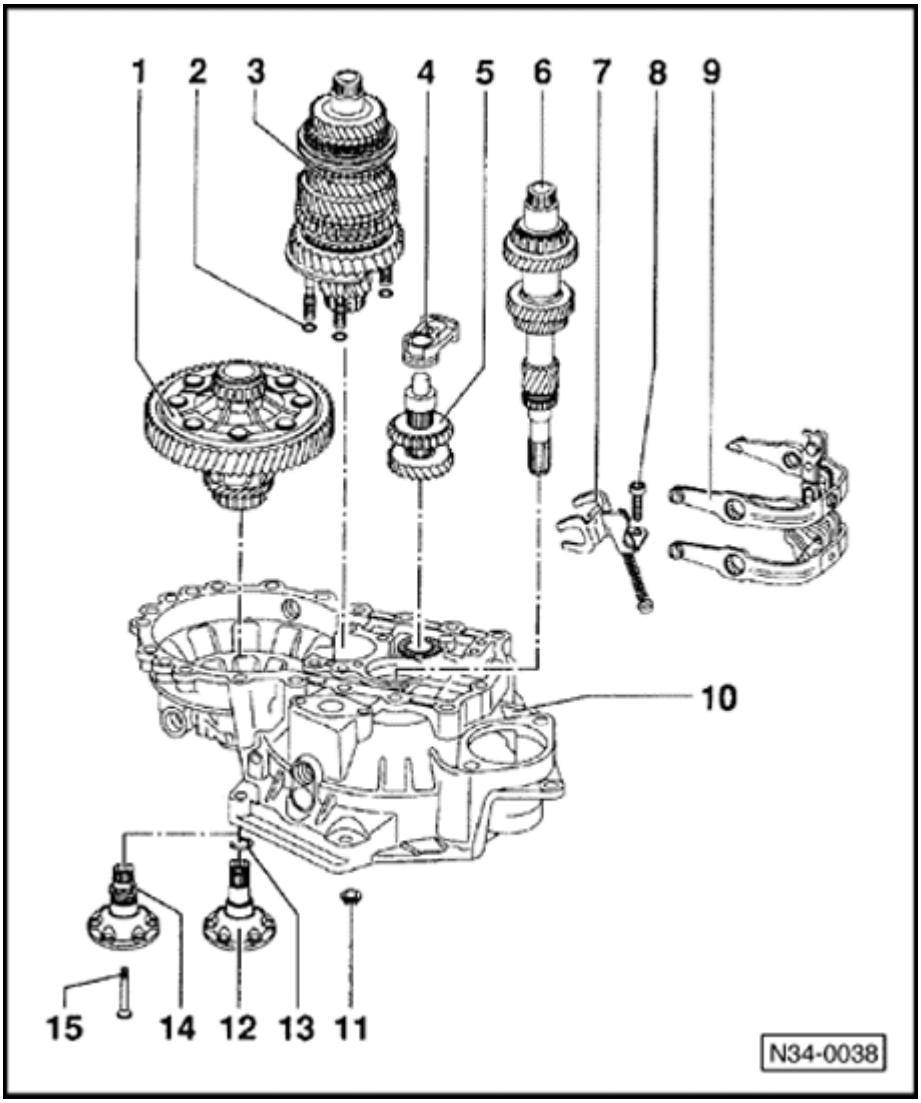

Input shaft, output shaft, differential and shift forks, removing and installing

1 - Differential

- Dismantling and assembling ⇒ Page 39-7

2 - Sealing ring

- Qty. 4
- Always replace

3 - Output shaft

- Dismantling and assembling ⇒ Page 35-19

34-58

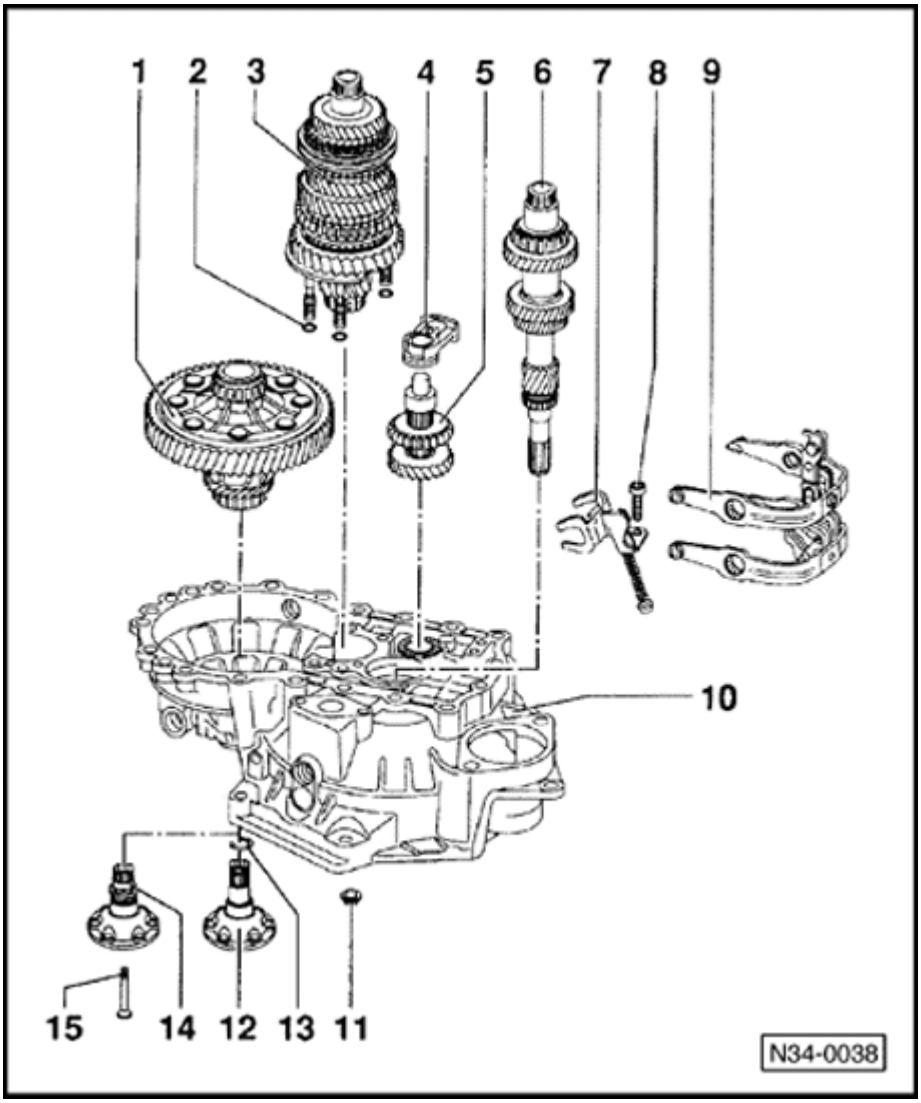

4 - Reverse shaft support

- Dismantling and assembling ⇒ Page 35-48

5 - Reverse shaft

- Dismantling and assembling ⇒ Page 35-47

6 - Input shaft

- Dismantling and assembling ⇒ Page 35-1

7 - Shift forks

- Dismantling and assembling ⇒ Page 34-94

8 - Torx socket head bolt, 25 Nm

9 - Reverse gear shift fork

- Dismantling and assembling ⇒ Page 34-94
- Installation position ⇒ Page 34-69

10 - Clutch housing

- Servicing ⇒ Page 34-78

34-59

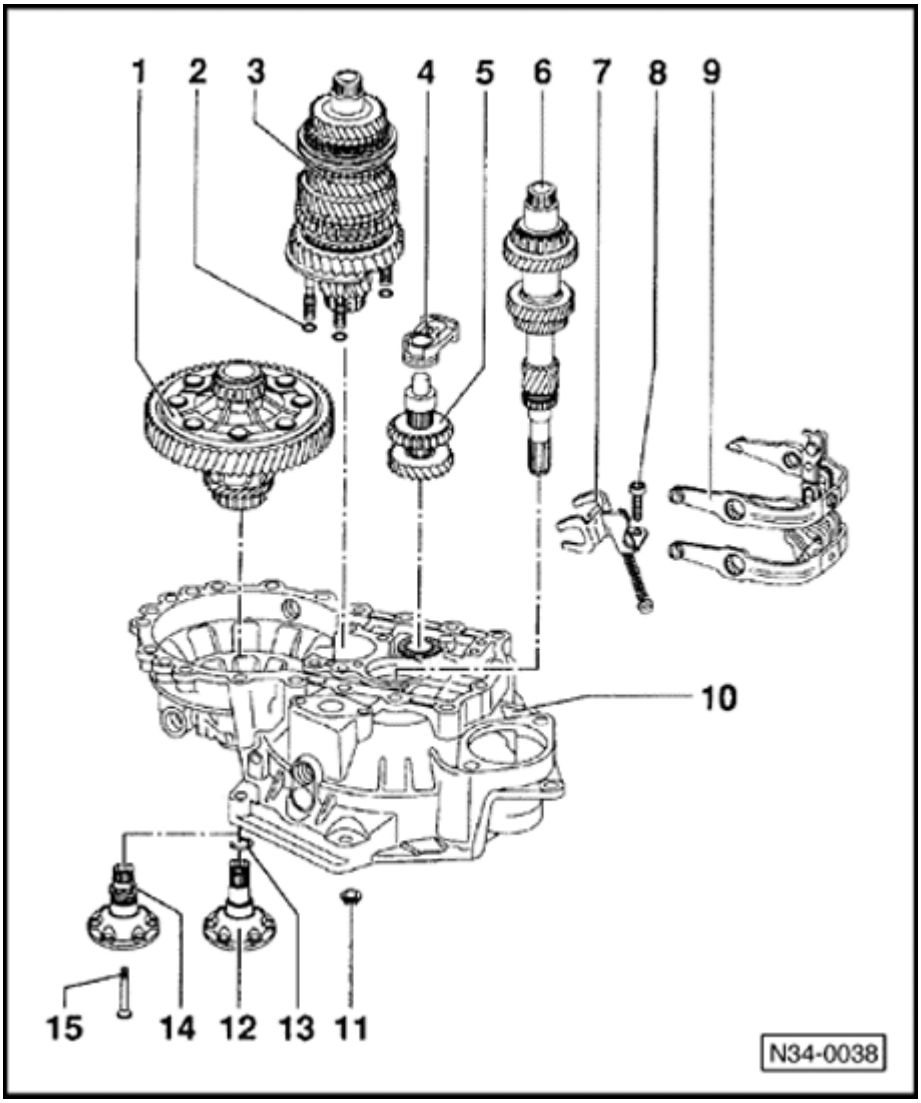

11 - Hexagon nut, 25 Nm and then turn 90° further

- 4 nuts for bearing support

12 - Axle flange shaft

13 - Circlip

- Always renew
- Removing and installing ⇒ Page 34-77

14 - Axle flange shaft with spring

- Applications ⇒ Page 39-14

15 - Cone head bolt, 25 Nm

- Installed in transmissions with springs behind flange shaft

34-60

Transmission, disassembling/assembling

Dismantling and assembling transmission housing cover, transmission housing, selector mechanism, input shaft, output shaft (pinion shaft), differential and shift forks

Dismantling

- Mount transmission on repair stand.

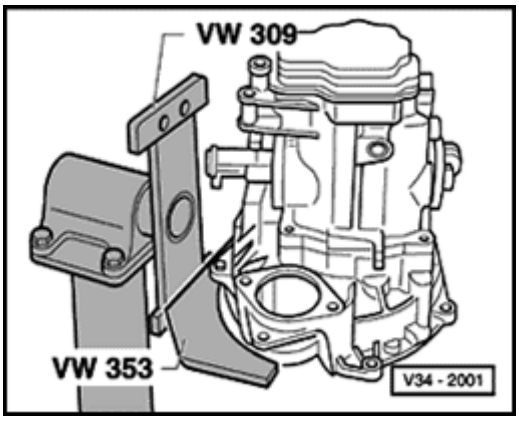

- Transmission for vehicles with 4-cylinder engine

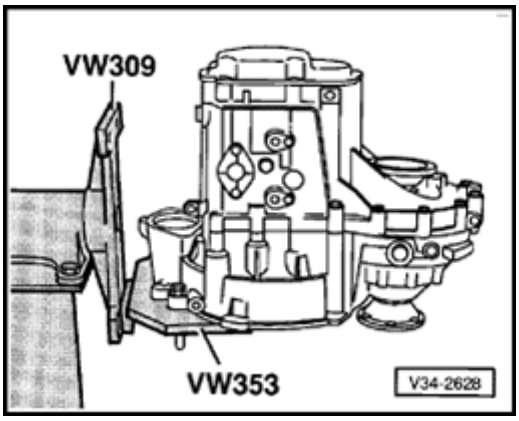

- Transmissions for vehicles with 6-cylinder fuel injection engine
- Drain transmission oil.

34-61

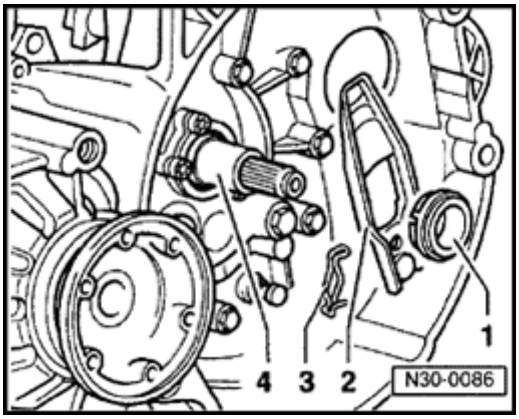

- Remove clutch release bearing -1- and clutch release lever -2- with retaining spring -3-.
- Remove clutch release bearing guide sleeve -4-.

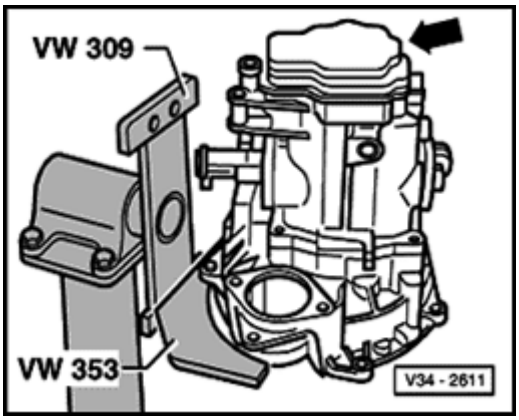

- Remove transmission housing cover (arrow).

34-62

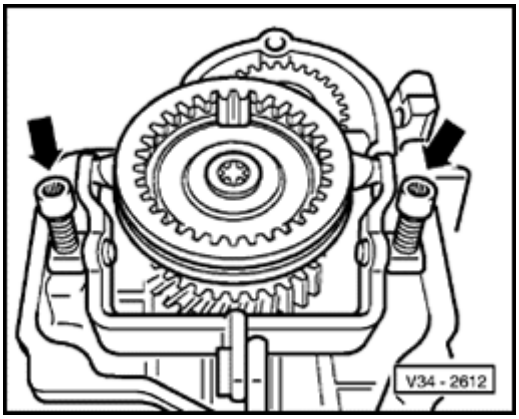

- Remove 5th gear shift fork (arrow)

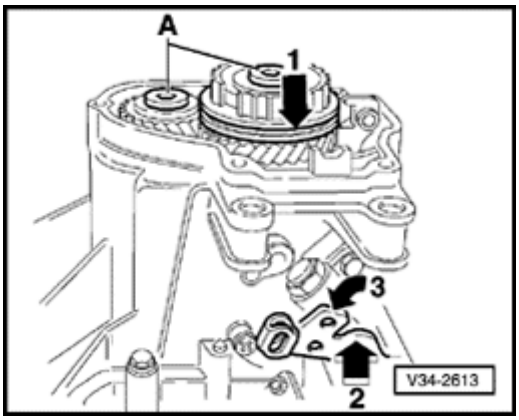

- Remove bolts -A- for synchro-hub and 5th gear, to do this select 5th (arrow 1) and 1st gear (arrows 2 and 3).

  - After engaging both gears the input shaft and output shaft are locked, synchro-hub and gear wheel cannot turn. Both bolts can now be loosened.

34-63

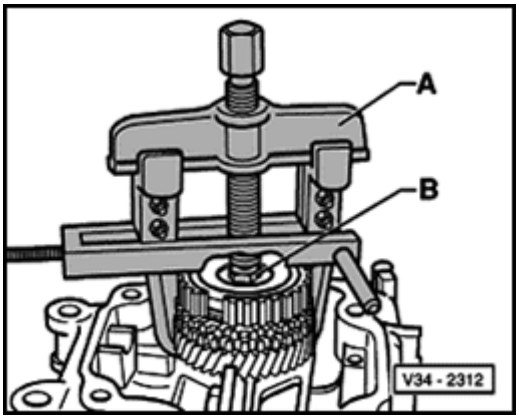

- Pull off synchro-hub and 5th gear wheel and remove together with needle roller bearing.

  A - Two arm puller e.g. Kukko 20/10 with Matra V/170 hooks.

  B - Hexagon bolt M10 x 20

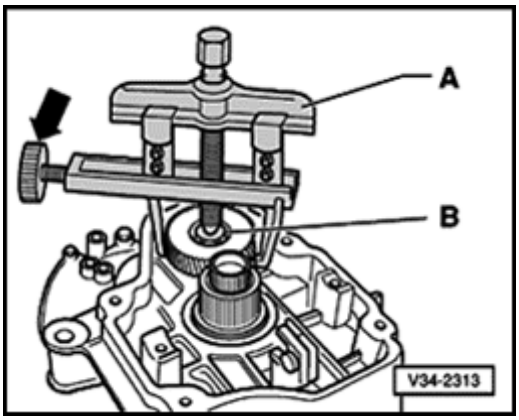

- Pull off 5th gear wheel

  A - Two arm puller e.g. Kukko 20/10 with Matra V/170 hooks.

  B - Hexagon bolt M10 x 20

  Sequence for removing:

  - Fit two arm puller and centralize by turning screw (arrow).
  - Heat gear wheel with hot air blower V.A.G 1416 and pull off.

Note:

When pulling off the gear wheel ensure that the hooks do not bend outwards, if necessary tighten screw (arrow). After 5th gear wheel has been removed check for damage.

34-64

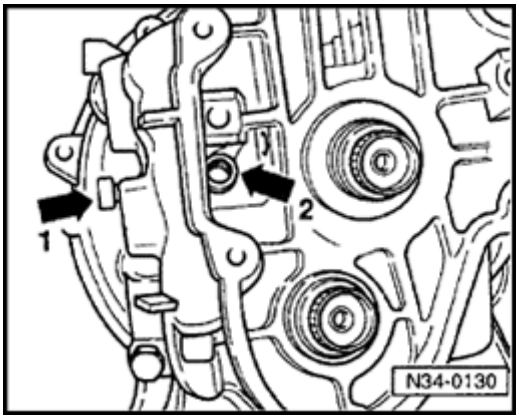

- Remove both screws (-arrow 1- and -arrow 2-) for reverse gear support shaft.
  - For inside screw (-arrow 2-) use Torx® wrench T45 x 100 mm (4 in.) long, VAG 1603/1 or equivalent

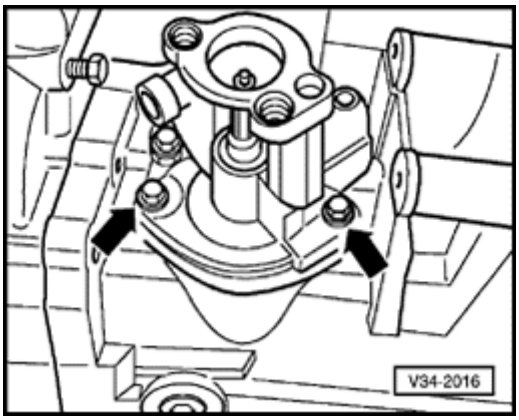

- Shift selector shaft to neutral, then remove bolts (-arrows-).
- Remove selector shaft assembly with cover from transmission housing.

34-65

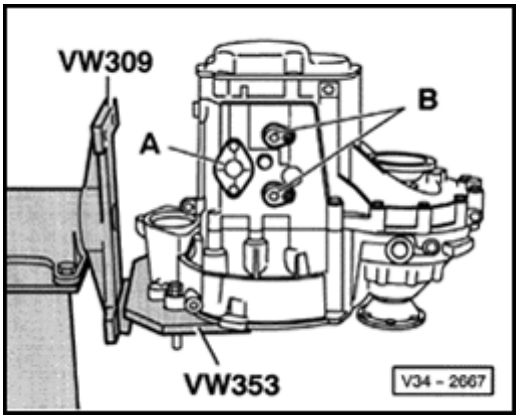

- Remove cover plate -A- and pivot pins -B- from underside of transmission.
- Remove left-side axle flange.

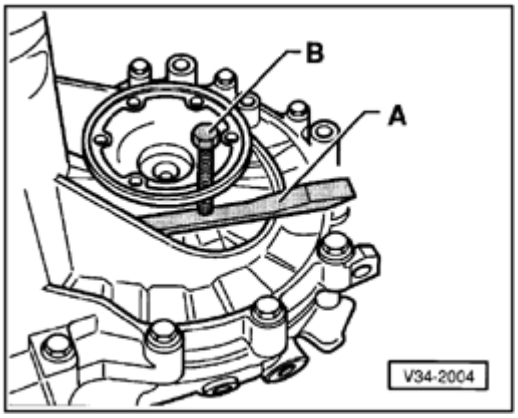

Transmission without springs behind axle flanges:

- Place chisel or spacer -A- under axle flange and turn bolt -B- to pull flange from differential gears.

Note:

If the axle flange shaft fails to come out straight, use two spacers -A-, and bolts -B- , positioned opposite each other. Alternate to tighten both bolts evenly.

Transmission with springs behind axle flanges:

- Remove cone-head bolt before removing axle flange.

34-66

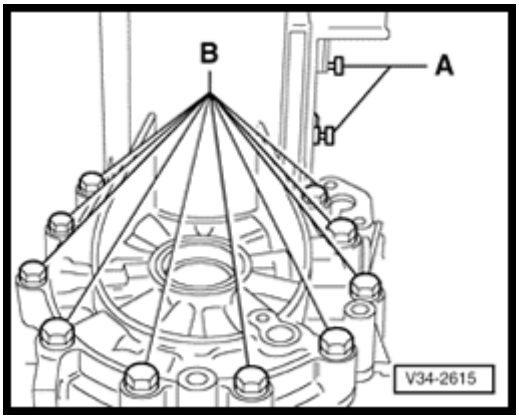

- Remove pivot pins -A- on top side of transmission and transmission housing to clutch housing securing bolts -B- in area of differential.

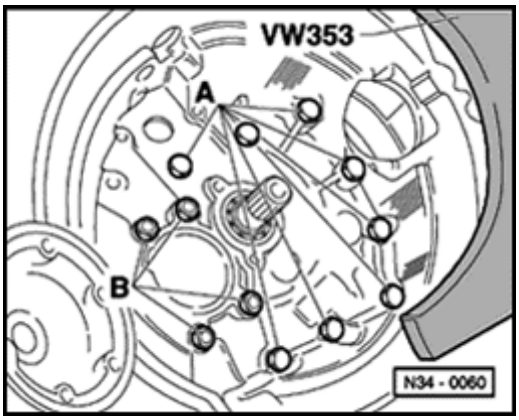

- Remove bolts -A-, from inside clutch housing for securing clutch housing to transmission housing.

CAUTION!

Do not yet remove the four nuts -B- for the output shaft bearing support.

34-67

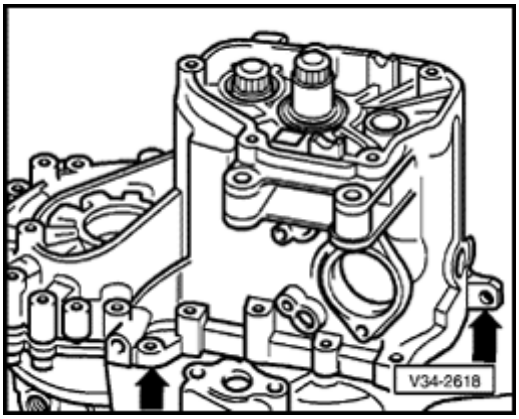

- Remove transmission housing. Carefully pry up, alternating between protruding housing flange and supports (-arrows-) on all sides.

CAUTION!

DO NOT damage the sealing surfaces.

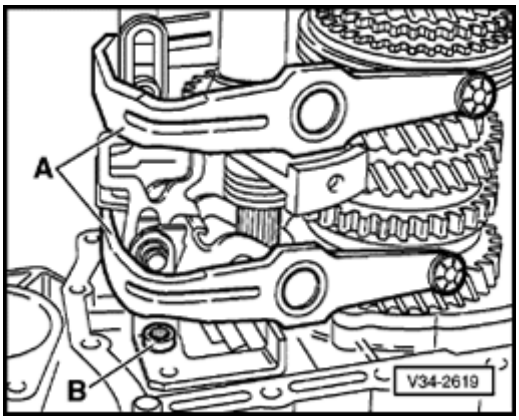

- Remove shift forks -A- together with selector plates.
- Unscrew bolt for selector mechanism for reverse gear -B-.

34-68

- Remove nuts for output shaft bearing support (⇒Item -B-, Illustration N34-0060, ⇒ Page 34-66)

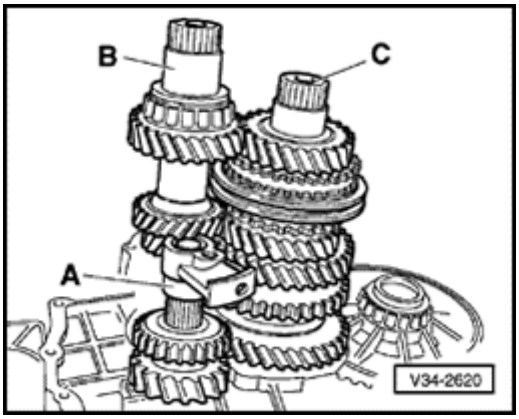

- Remove reverse gear -A-, input shaft -B- and output shaft -C- one after the other from clutch housing.
- Remove right-side axle flange shaft.

Note:

Removing right-hand flange shaft is identical to left-hand flange shaft ⇒ Page 34-65

- Remove differential.

Assembling

- Install differential.

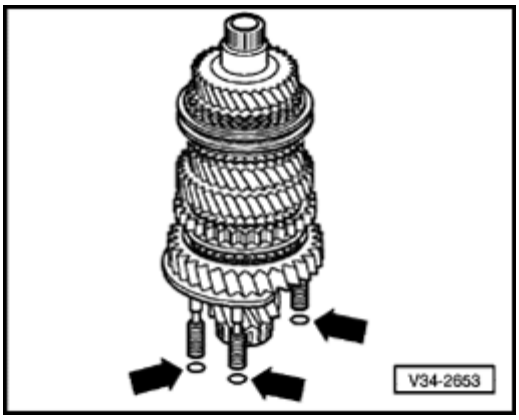

- Always renew sealing rings (arrows) for output shaft bearing support.

Note:

The illustration only shows 3 of the 4 sealing rings.

- Install input shaft, output shaft and reverse shaft together.
- Tighten nuts for output shaft bearing support.
- Clean locking fluid remnants from threads in the reverse shaft support (arrow Illustration V34-2293, ⇒ Page 34-70). The remnants can be removed using a tap.
- Install reverse shaft support.
- Install reverse gear selector mechanism.

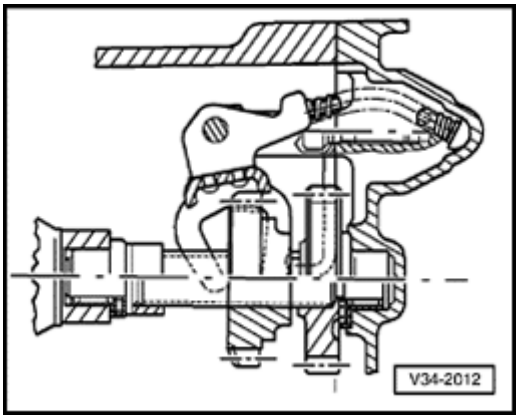

Installation position reverse gear

- Install shift forks together with selector plates.

34-70

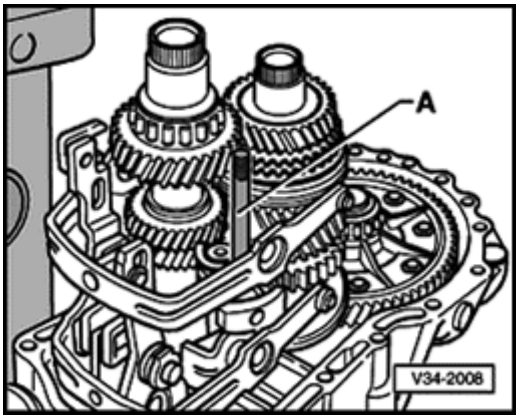

- Screw M 8 x 100 mm studs -A- into reverse shaft support so that the shaft is aligned after fitting transmission housing.
- Align selector plates.

Note:

The selector segments must be positioned in the grooves on the locking collars.

- Install transmission housing.

Install reverse shaft support bolts (arrow) as follows:

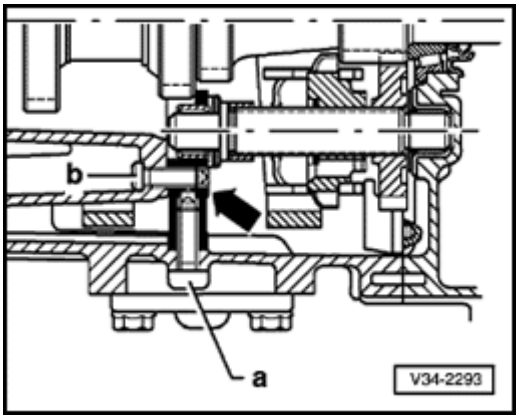

- Insert bolt -a-, remove stud (⇒ Illustration V34-2008), insert bolt -b- and hand tighten.
- Tightening sequence:

  1 - Bolt -a- 30 Nm

  2 - Bolt -b- 30 Nm

34-71

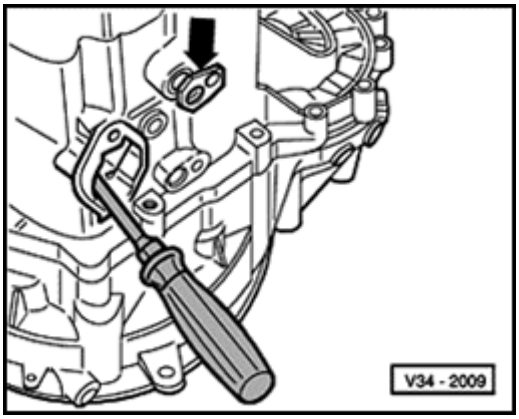

- Align shift fork assembly with screwdriver and install shift fork pivot pin (-arrow-).
- Repeat until all four pivot pins are installed.

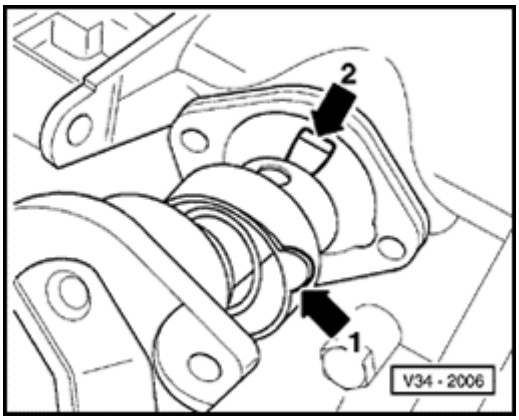

- Install selector shaft as follows:
  - Place selector plates in neutral.
  - Locate lug (arrow 1) in the recess in transmission housing.
  - Position selector shaft so that selector finger (arrow 2) is inserted in the selector plates.
- Install selector shaft cover.

34-72

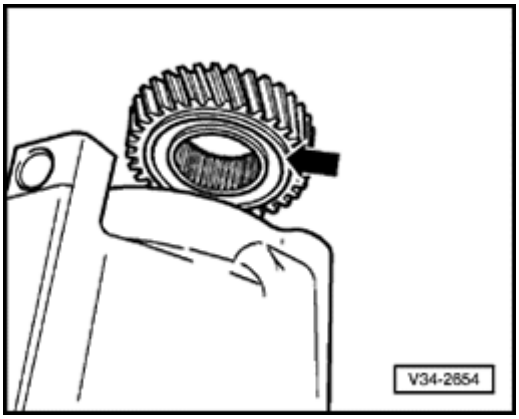

Installation position for 5th gear

The circumferential groove (arrow) faces to transmission housing.

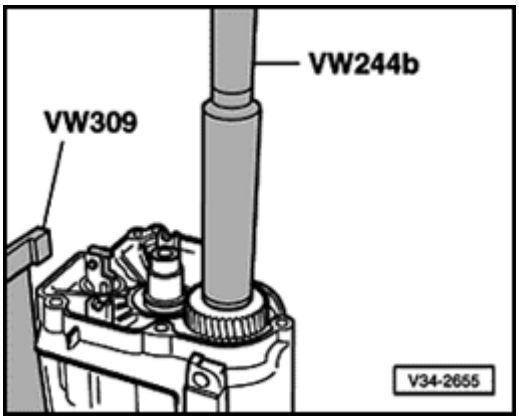

- Drive on 5th gear.

Checking for wear, 5th gear synchro-ring

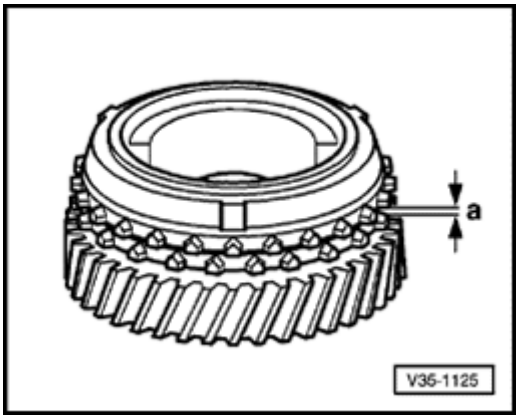

- Before installing 5th gear wheel and synchro-ring press the synchro-ring onto the cone of the gear wheel and measure gap -a- with a feeler gauge.

Gap -a-	New	Wear limit
5th gear	1.1 ... 1.7 mm	0.5 mm

- Install 5th gear wheel with needle roller bearing
- Place 5th gear synchro-ring on gear wheel

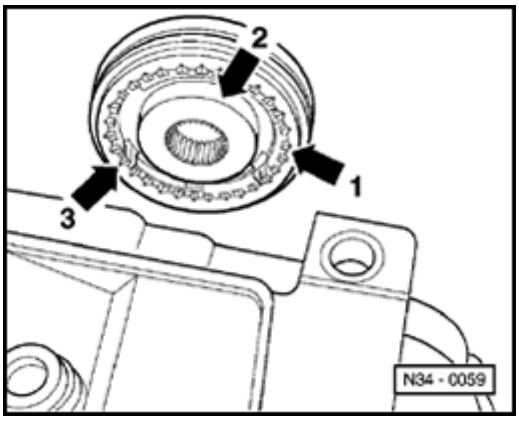

Installation position 5th gear synchro-ring

The pointed teeth of the locking collar (arrow 1) and the high shoulder of the synchro-hub (arrow 2) face the transmission housing.

The syncro-hub mountings (arrow 3) align with the synchro-ring cast locking pieces (⇒arrows on Illustration N35-0018, ⇒ Page 34-74).

34-74

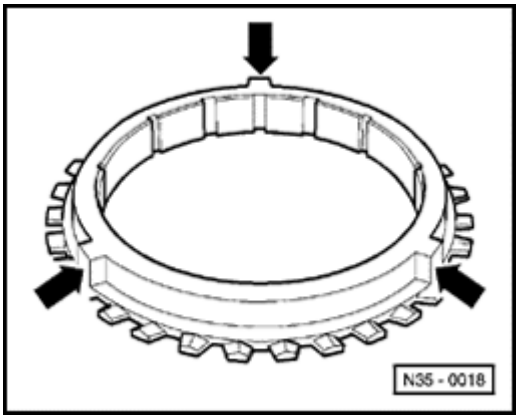

5th gear synchro-ring with cast locking lugs

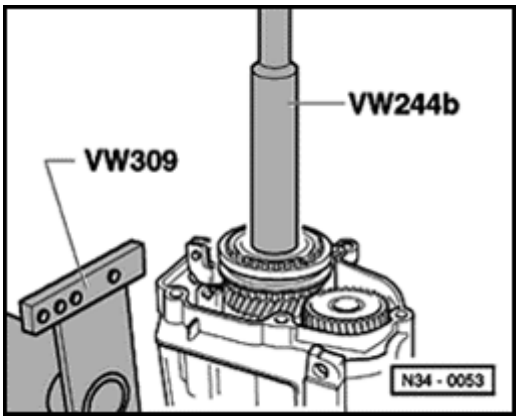

- Drive on 5th gear synchro-hub.

Note:

When driving on, ensure synchro-ring is free to move.

34-75

- Screw-in securing bolts for synchro-hub and 5th gear wheel; hand tighten only.

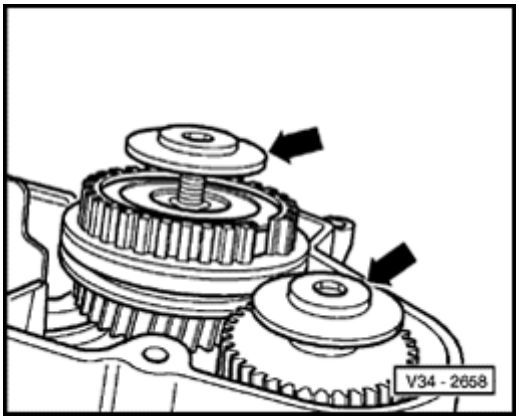

Belleville spring/attachment bolts for 5th gear synchro-hub and 5th gear, installation position

The outer diameter (concave side -arrows-) faces 5th gear.

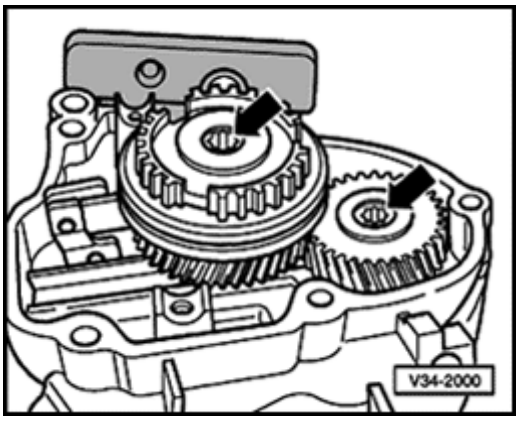

- Engage two gears before tightening 5th gear synchro-hub and gear wheel securing bolts (arrows) (⇒Illustration 34-2613, ⇒ Page 34-62)
- Install 5th gear shift fork.

34-76

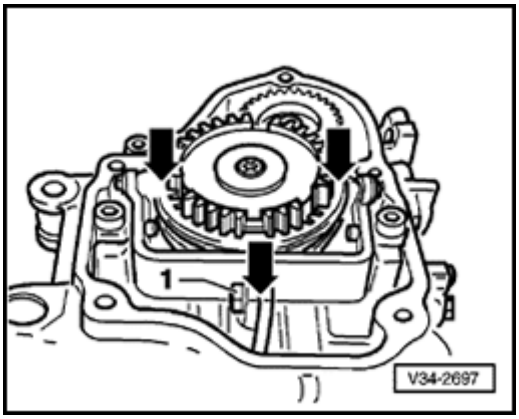

Adjusting 5th gear

- Engage 5th gear.
- Loosen bolt -1-.
- Press operating sleeve and shift fork jaws in direction of arrow.
- Then tighten bolt -1- to 25 Nm.
- Check measurement:
  - It must NOT be possible to slide a 0.2 mm feeler gauge between locking collar and gear wheel.
- If necessary repeat adjustment.
- Disengage 5th gear. Locking collar must now be in the neutral position. Synchro-ring must move freely.

Note:

- *Operating sleeve must now be in neutral position.*
- *Synchro-ring must be able to move freely.*

- Install transmission housing cover

34-77

Transmission without springs behind axle flanges:

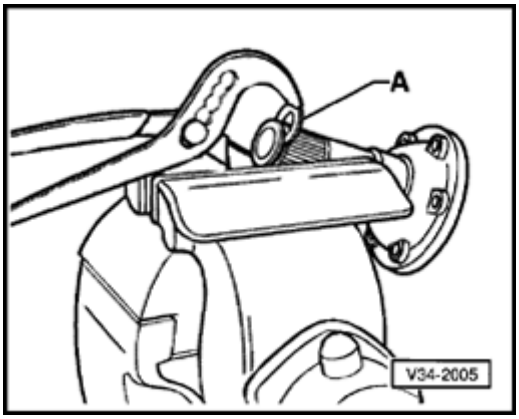

Replacing flange shaft circlip, as follows:

- Clamp axle flange shaft using vice clamps, in vice.
- Press old circlip out of flange shaft groove with new circlip -A-.
- Drive in flange shaft with e.g. drift VW 295.

Transmission with springs behind axle flanges:

- Install complete axle flange shaft ⇒ Page 34-54

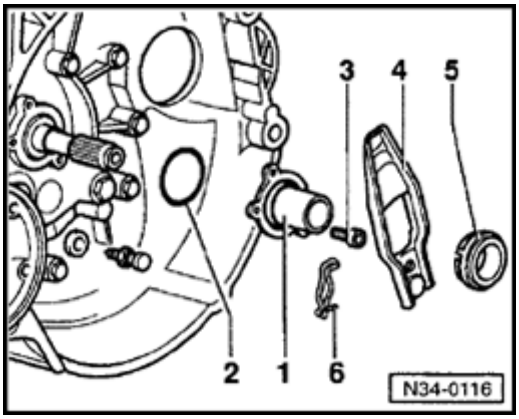

- Install guide sleeve -1- for clutch release bearing along with O-ring -2- and bolts -3-.
- Install clutch release lever -4- and clutch release bearing -5- with retaining spring -6-.

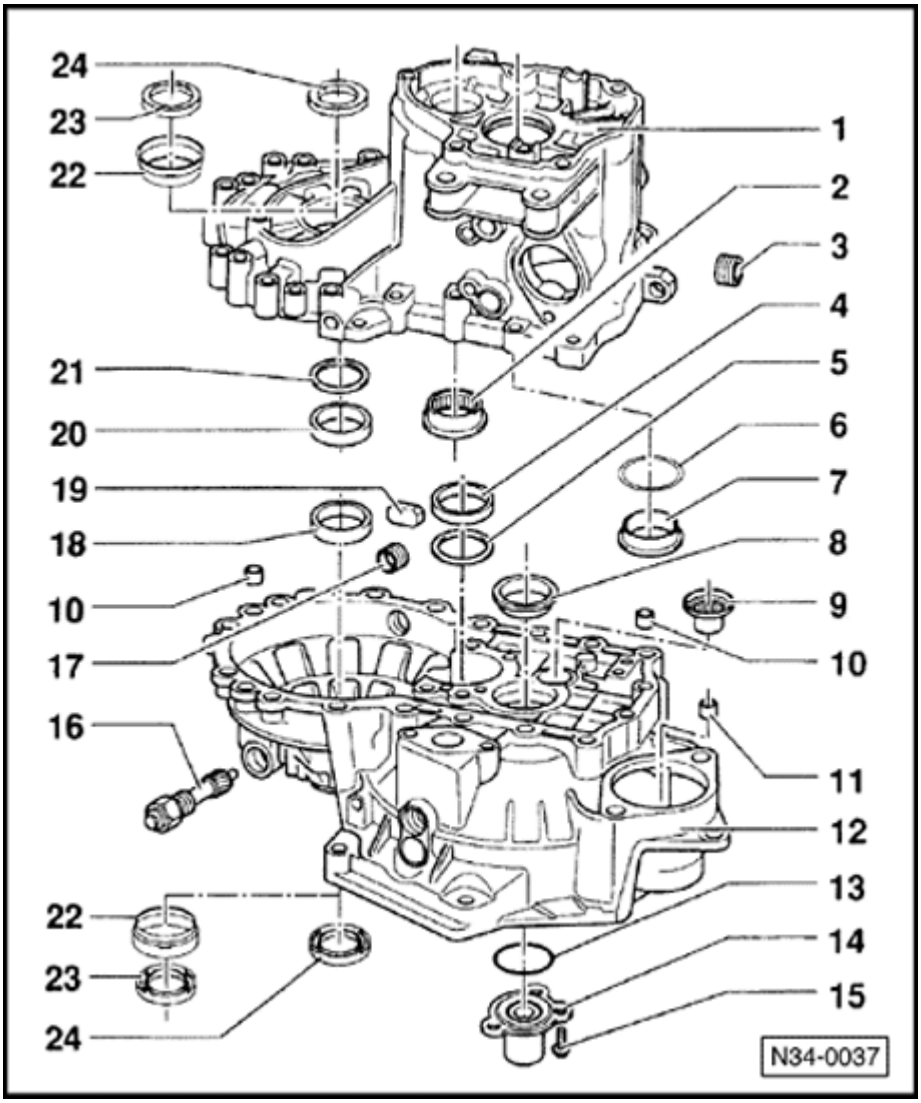

Transmission housing and clutch housing, servicing

1 - Transmission housing

- If replaced: Adjust input shaft and differential ⇒ Page 39-24

2 - Needle roller bearing

- For output shaft
- Removing ⇒ Fig. 1
- Installing and securing ⇒ Fig. 2

3 - Oil filler plug, 25 Nm

- Without magnet

4 - Outer race/taper roller bearing

- For output shaft
- Removing and installing ⇒ Page 35-29
- If replaced: Adjust output shaft ⇒ Page 35-43

34-79

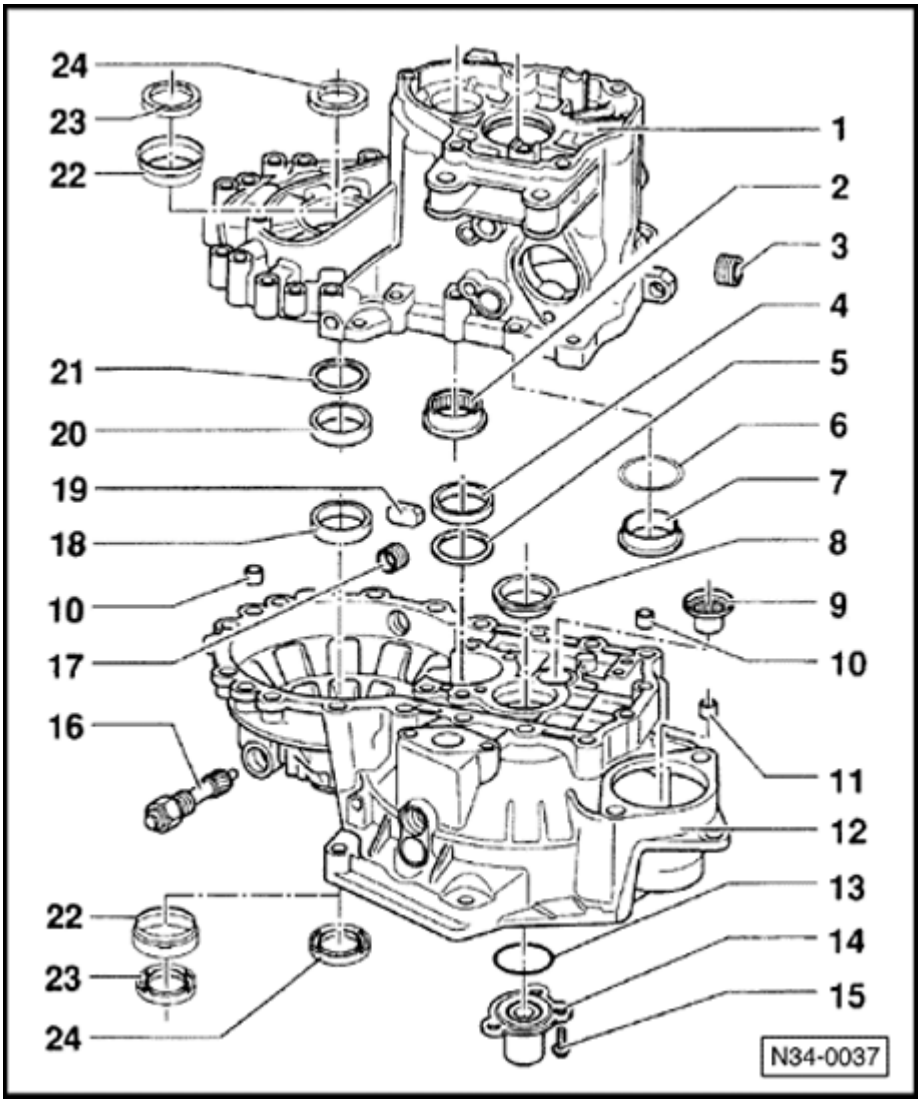

5 - Shim

- For output shaft
- Adjustment overview ⇒ Page 39-24

6 - Shim

- For input shaft
- Adjustment overview ⇒ Page 39-24

7 - Outer race/taper roller bearing

- For input shaft
- Removing and installing ⇒ Page 35-6
- If replaced: Adjust input shaft ⇒ Page 35-13

8 - Outer race/taper roller bearing

- For input shaft
- Removing and installing ⇒ Page 35-10

34-80

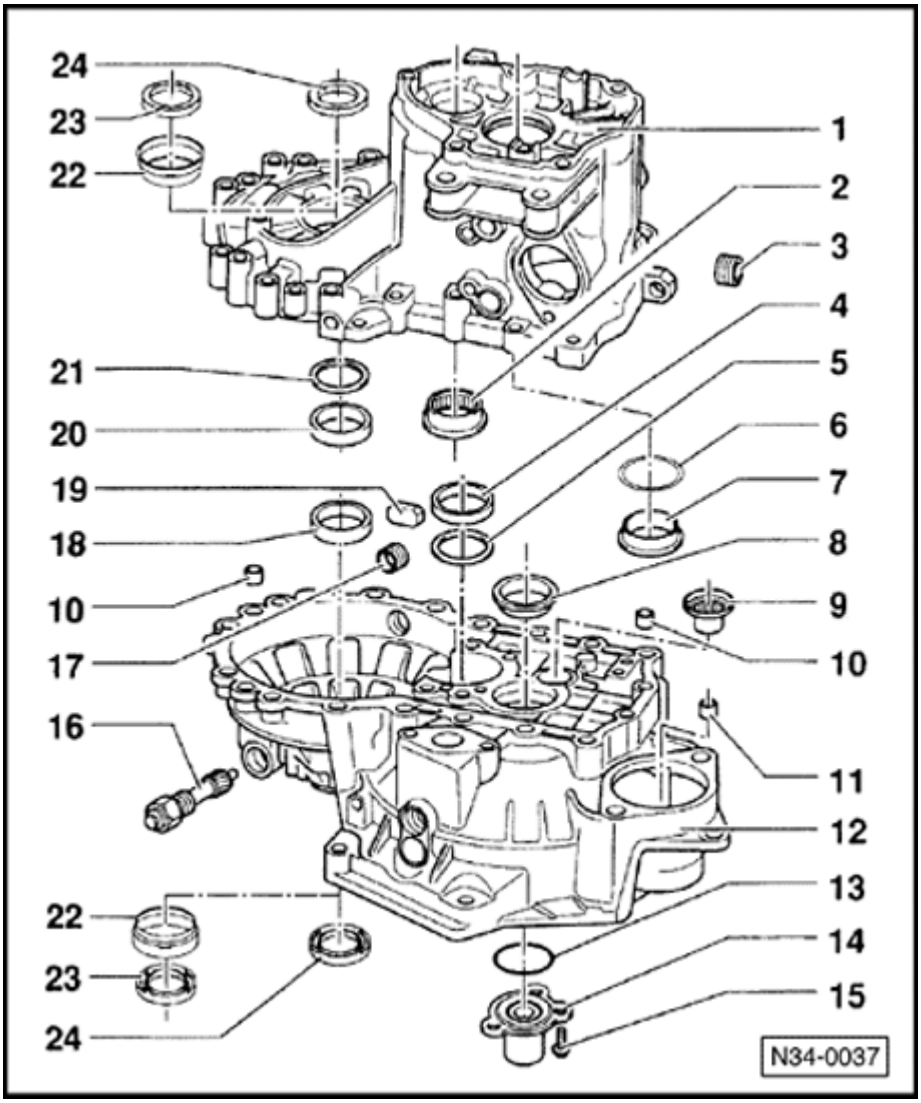

9 - Needle bearing

- Removing and installing ⇒ Page 35-49

10 - Dowel sleeve

- (Qty. 2)

11 - Starter bushing

- Removing ⇒ Fig. 5
- Installing ⇒ Fig. 6
- Can be replaced without removing transmission

12 - Clutch housing

- If replaced: ⇒Adjustment overview, ⇒ Page 39-24
- Different mounting flanges for 4-cylinder and 6-cylinder engines

34-81

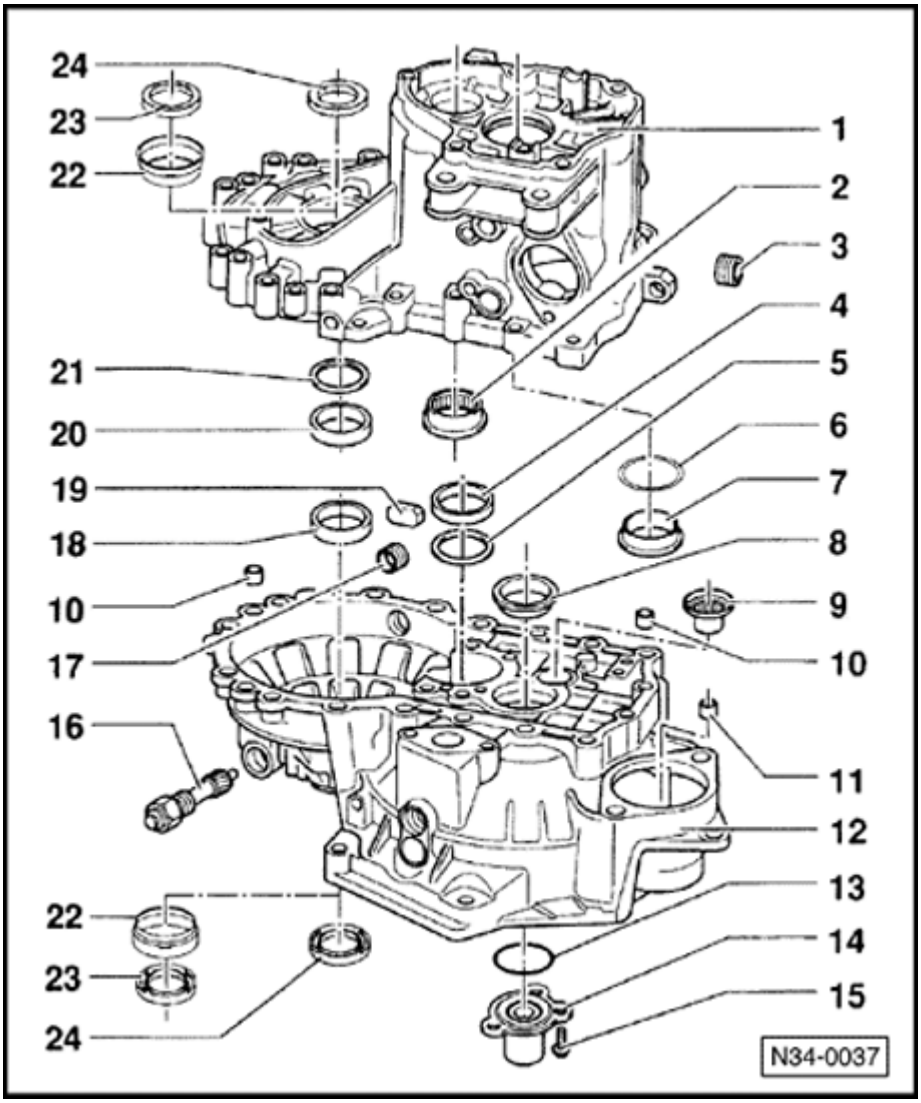

13 - O-ring

- Always renew
- Place on guide sleeve and apply multi-purpose grease

14 - Guide sleeve

- With oil seal for input shaft
- Removing oil seal ⇒ Fig. 3
- Installing oil seal ⇒ Fig. 4
- Remove guide sleeve to change the oil seal

15 - Socket head bolt, 20 Nm

- Self-locking
- Always renew

16 - Speedometer drive, 30 Nm

17 - Oil drain plug, 25 Nm

- Without magnet

34-82

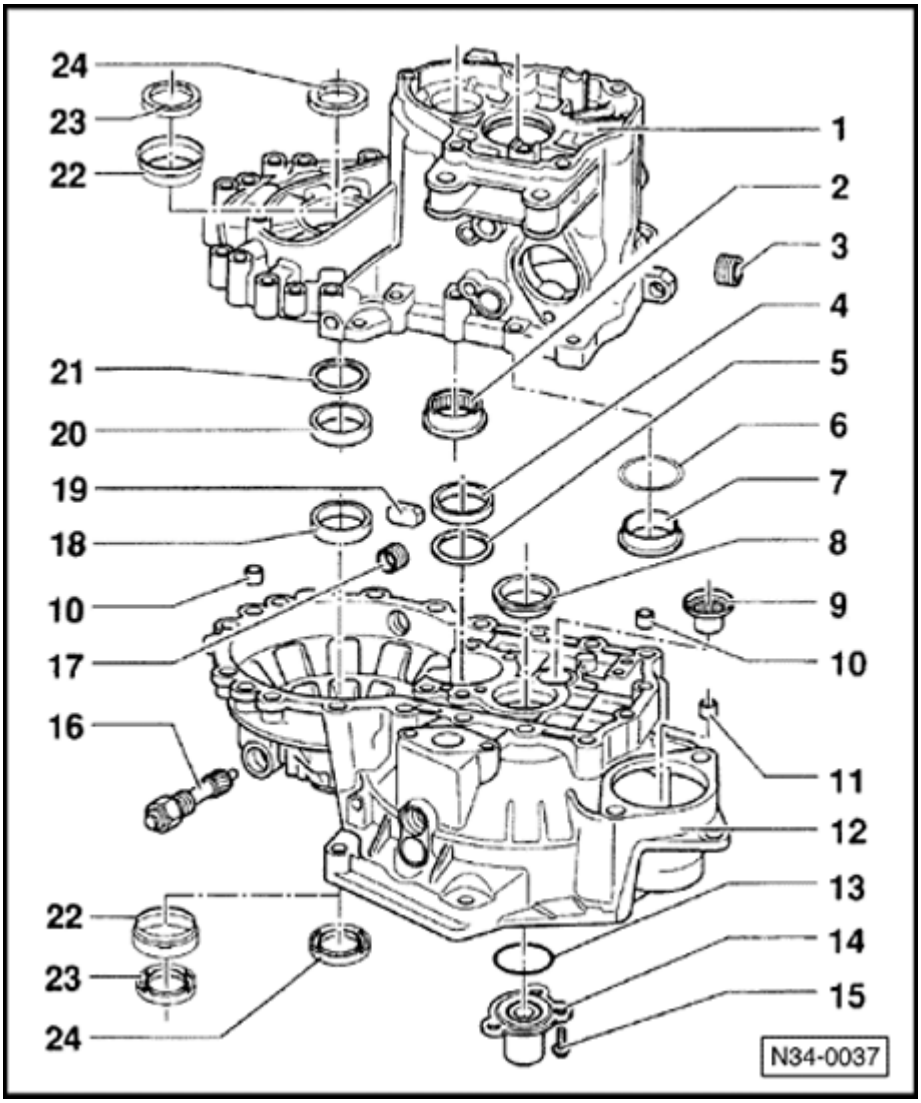

18 - Outer race/taper roller bearing

- For differential
- Removing and installing ⇒ Page 39-7
- If replaced: Adjust differential ⇒ Page 39-25

19 - Magnet

- Located in housing, secured in place by surface of mating housing

20 - Outer race/taper roller bearing

- For differential
- Removing and installing ⇒ Page 39-7
- If replaced: Adjust differential ⇒ Page 39-25

21 - Shim

- For differential
- Adjustment overview ⇒ Page 39-24

34-83

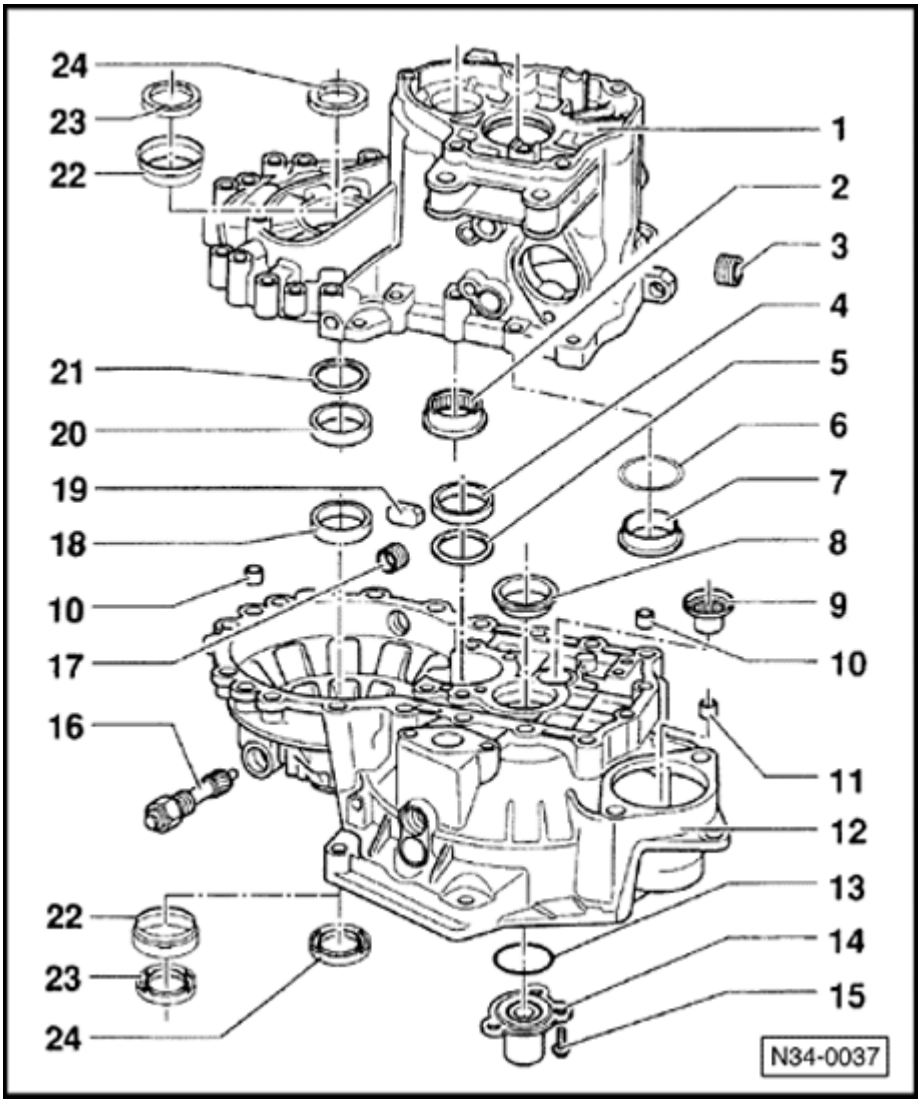

22 - Sleeve

- For oil seal (Item 23)
- Installed in transmissions with springs behind axle flange shafts
- Removing ⇒ Fig. 7
- Installing ⇒ Fig. 8

23 - Oil seal

- For transmissions with springs behind axle flange shafts
- Renewing ⇒ Page 39-4

24 - Oil seal

- For transmissions without springs behind axle flange shafts
- Renewing ⇒ Page 39-1

34-84

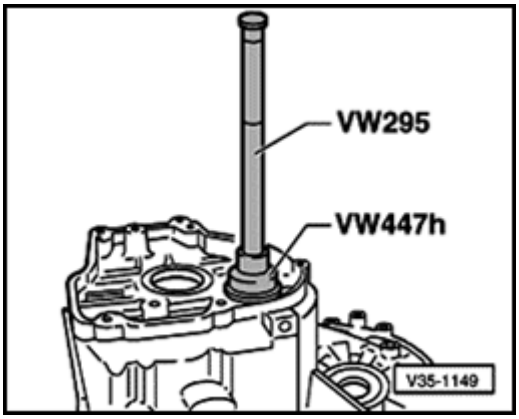

Fig. 1 Driving out needle roller bearing for output shaft

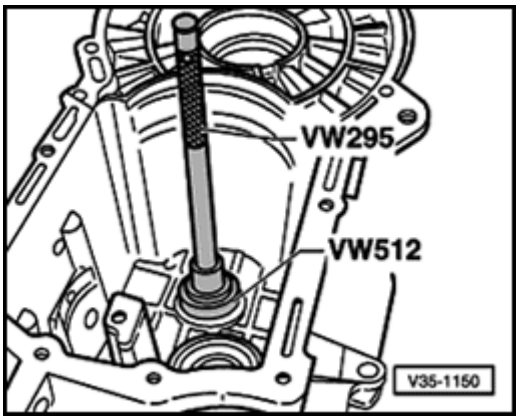

Fig. 2 Driving in and seating needle roller bearing for output shaft

- Secure needle roller bearing in transmission housing at three points (120° offset) with a punch.

34-85

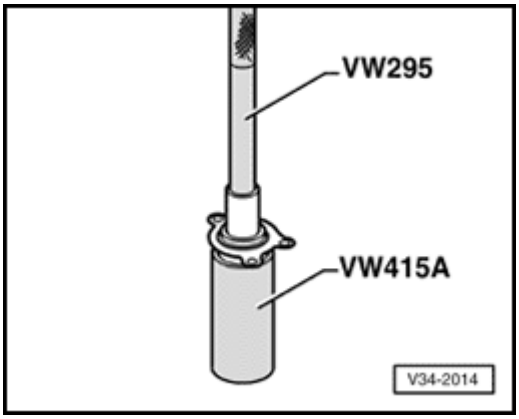

Fig. 3 Removing oil seal from clutch release bearing guide sleeve

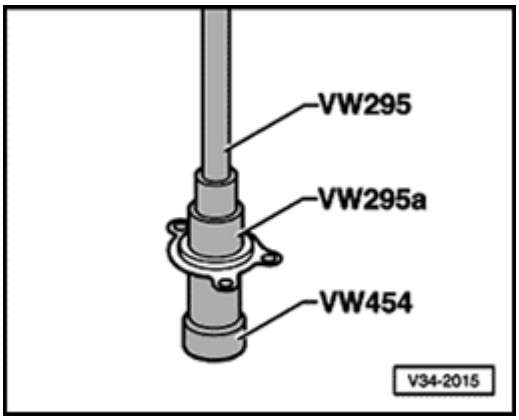

Fig. 4 Installing oil seal in guide sleeve

34-86

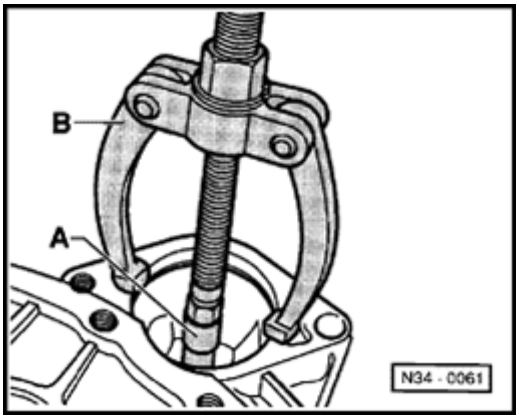

Fig. 5 Removing starter bushing

A - Internal extractor, e.g. Kukko 21/2, 14.5 to 18.5 mm

B - Counter support. e.g. Kukko 22/1

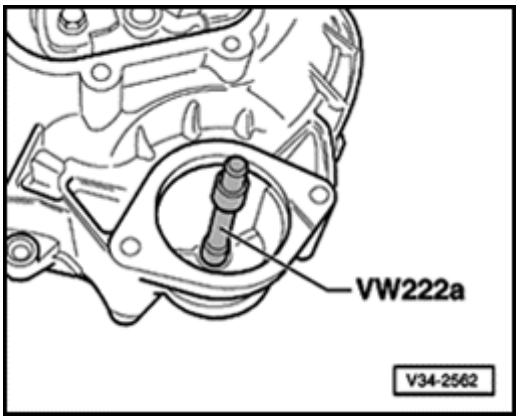

Fig. 6 Installing starter bushing

34-87

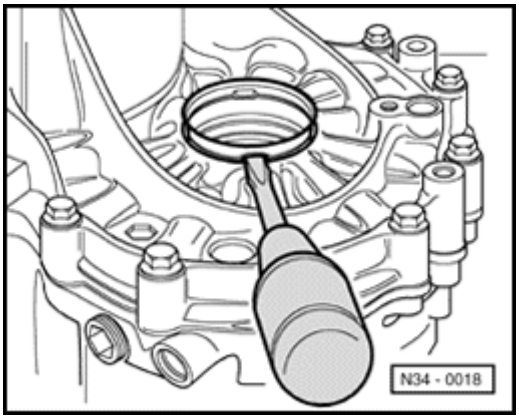

Fig. 7 Prying out sleeve with screwdriver

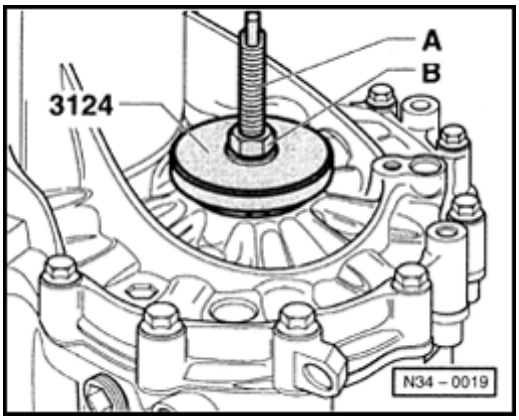

Fig. 8 Pulling sleeve in

A - Screw threaded rod from assembly device 3066 into differential threaded piece

B - Nut M12 with washer

- Pull sleeve in onto stop with thrust piece 3124 by turning on nut -B-.
- Screw threaded rod -A- into differential threaded piece

Note:

When transmission is dismantled press sleeve in with thrust piece 3124 onto stop.

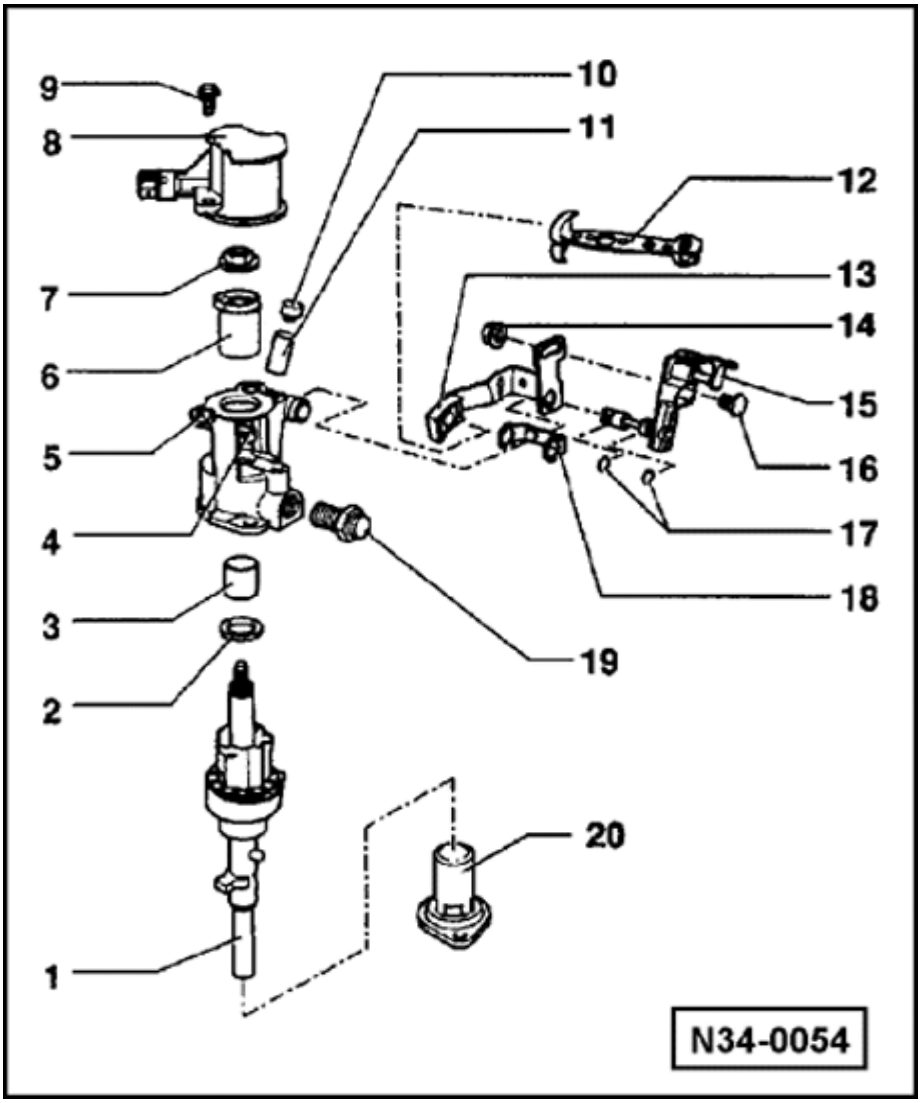

Selector shaft, disassembling and assembling

1 - Selector shaft

2 - Stop ring

3 - Ball sleeve

- Removing ⇒ Fig. 1
- Installing ⇒ Fig. 2

4 - Oil seal

- Pry out with screwdriver
- Installing ⇒ Fig. 3

5 - Cover

34-89

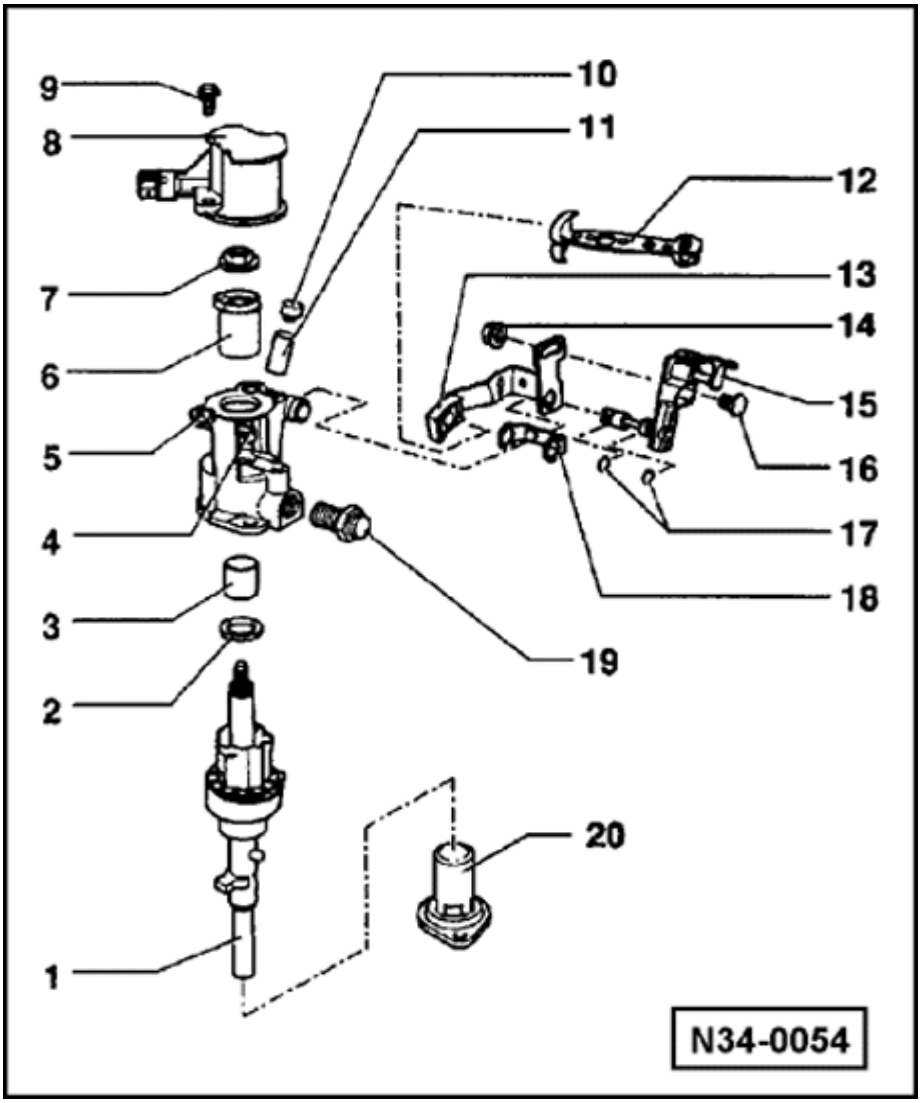

6 - Sleeve

- Tab faces Back-Up Light Switch (F4)
- Lightly coat tab with MoS_2 grease

7 - Hexagon nut, 25 Nm

- Self-locking
- Always renew

8 - Housing

- With Back-Up Light Switch (F4)

9 - Bolt

10 - Cap

- For transmission breather

11 - Sleeve

- Drive in to stop

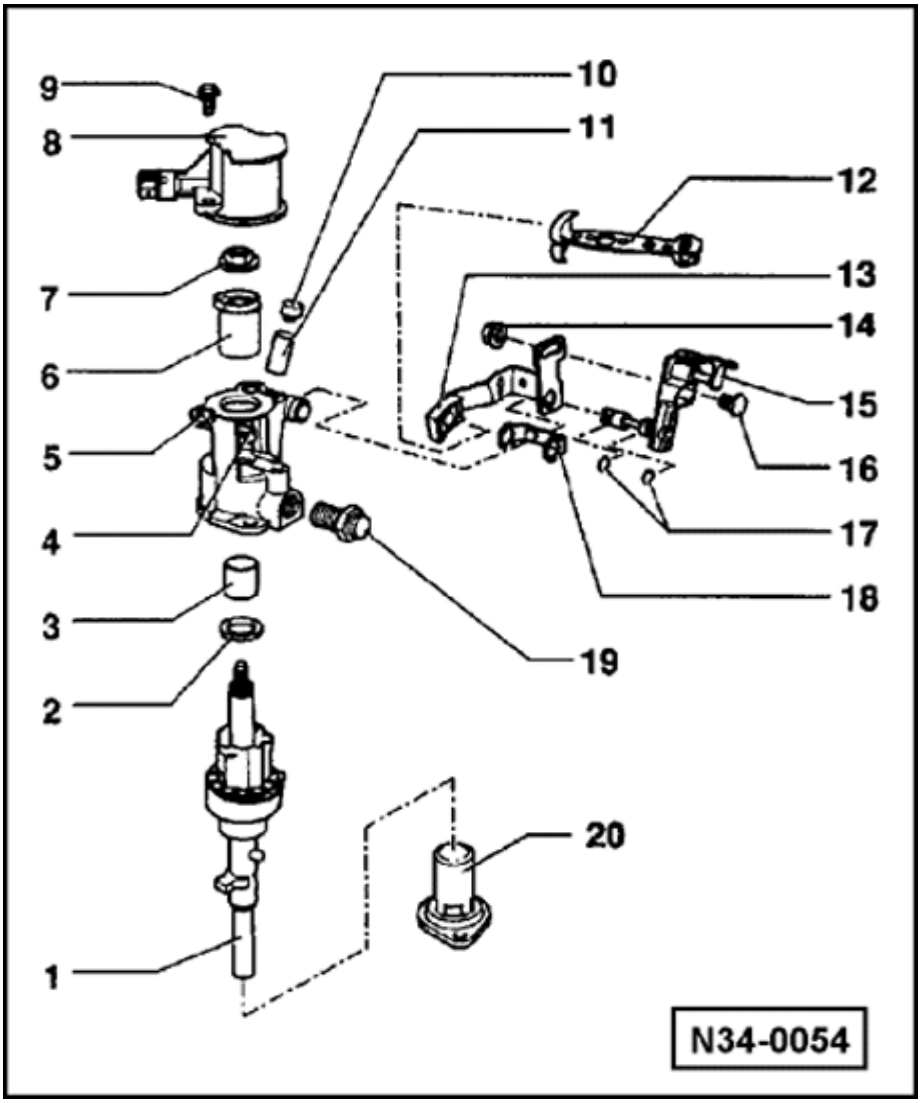

12 - Transmission gearshift lever

- Install so that the master spline aligns with selector shaft
- Can be replaced with the selector mechanism installed
- Installation position ⇒ Page 34-9
- Replacing ⇒ Fig. 4

13 - Relay lever

- Installation position ⇒ Page 34-9

14 - Nut, 15 Nm

15 - Actuating arm

- With axis pin for mounting relay lever
- Installation position ⇒ Page 34-9

16 - Bolt

- Press into actuating arm

34-91

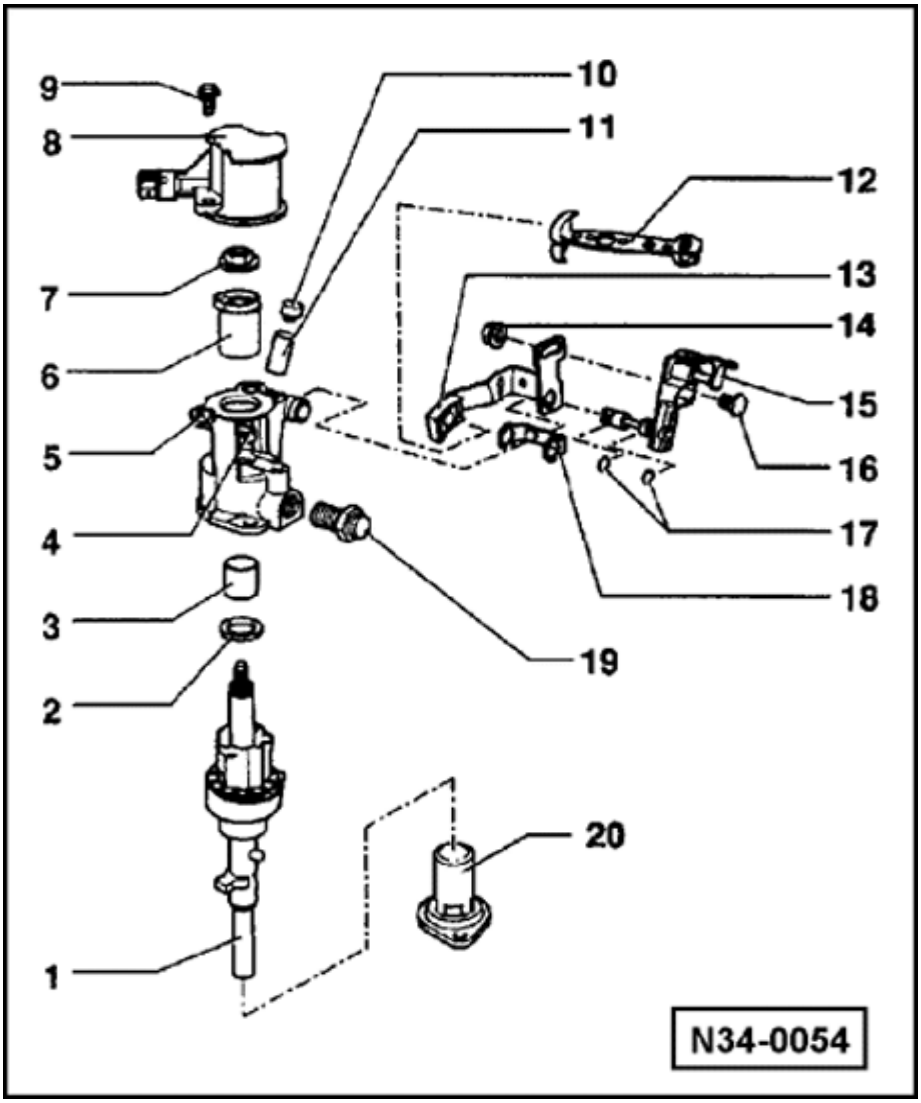

17 - O-ring

- Pull onto actuating arm shaft

18 - Spacer

- Press into relay lever

19 - Locking bolt, 40 Nm

20 - Cover

34-92

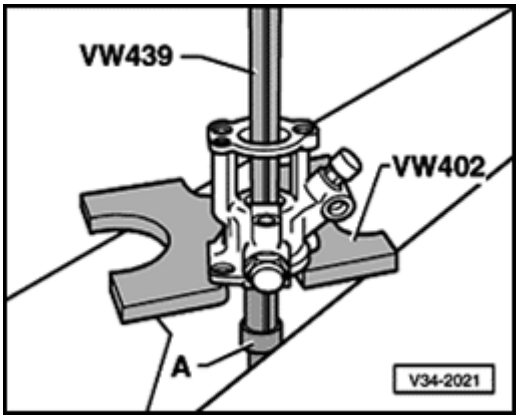

Fig. 1 Removing ball sleeve from selector mechanism cover

Note:

Before pulling out ball sleeve, destroy plastic cage and remove balls.

A - Internal extractor, e.g. Kukko 21/3, 18.5 to 23.5 mm

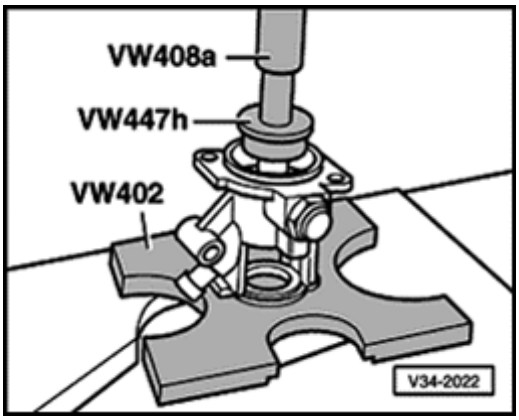

Fig. 2 Installing ball sleeve in selector mechanism cover

34-93

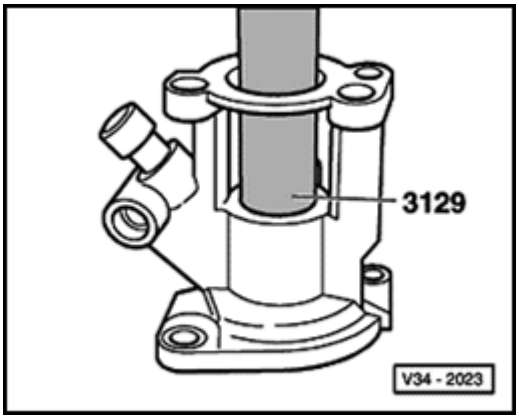

Fig. 3 Installing oil seal

- Press in up to stop.

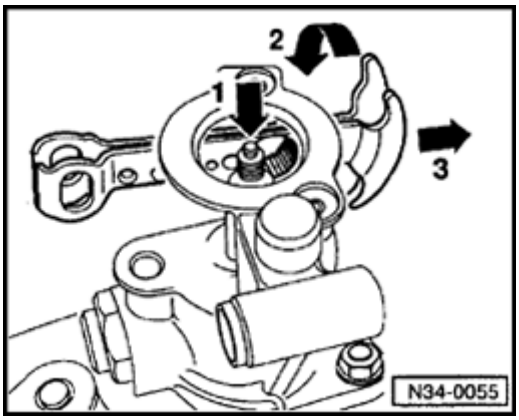

Fig. 4 Replacing transmission gearshift lever

- Press selector shaft down (arrow -1-).
- Twist gearshift lever round (arrow direction -2-) and pull out (arrow direction -3-).

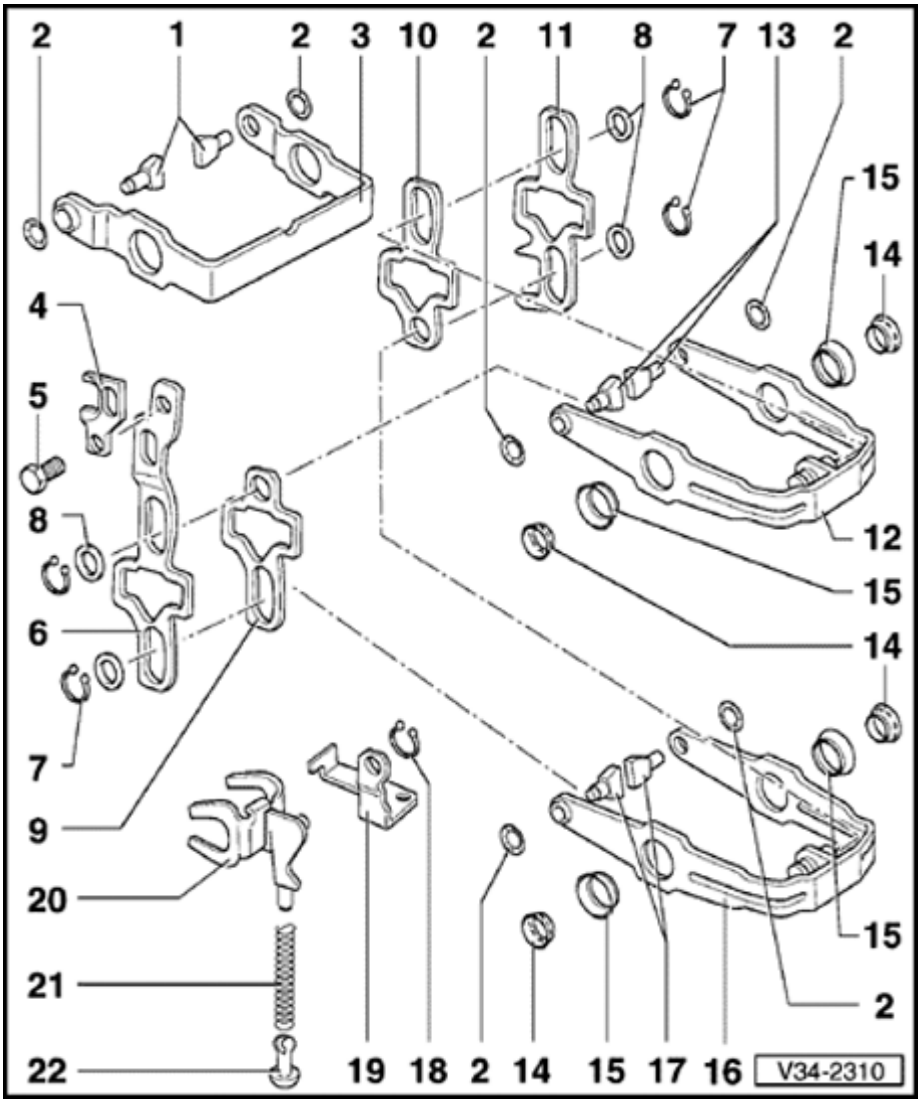

Shift forks, disassembling and assembling

1 - Shift segment

- Identification ⇒ Fig. 1
- After installing the circlip the shift segment must rotate freely

2 - Circlip

- Pry off with screwdriver
- Installing ⇒ Fig. 2
- Always renew

3 - 5th gear shift fork

- Adjusting ⇒ Page 34-76

4 - 5th gear selector jaw

5 - Bolt, 25 Nm

34-95

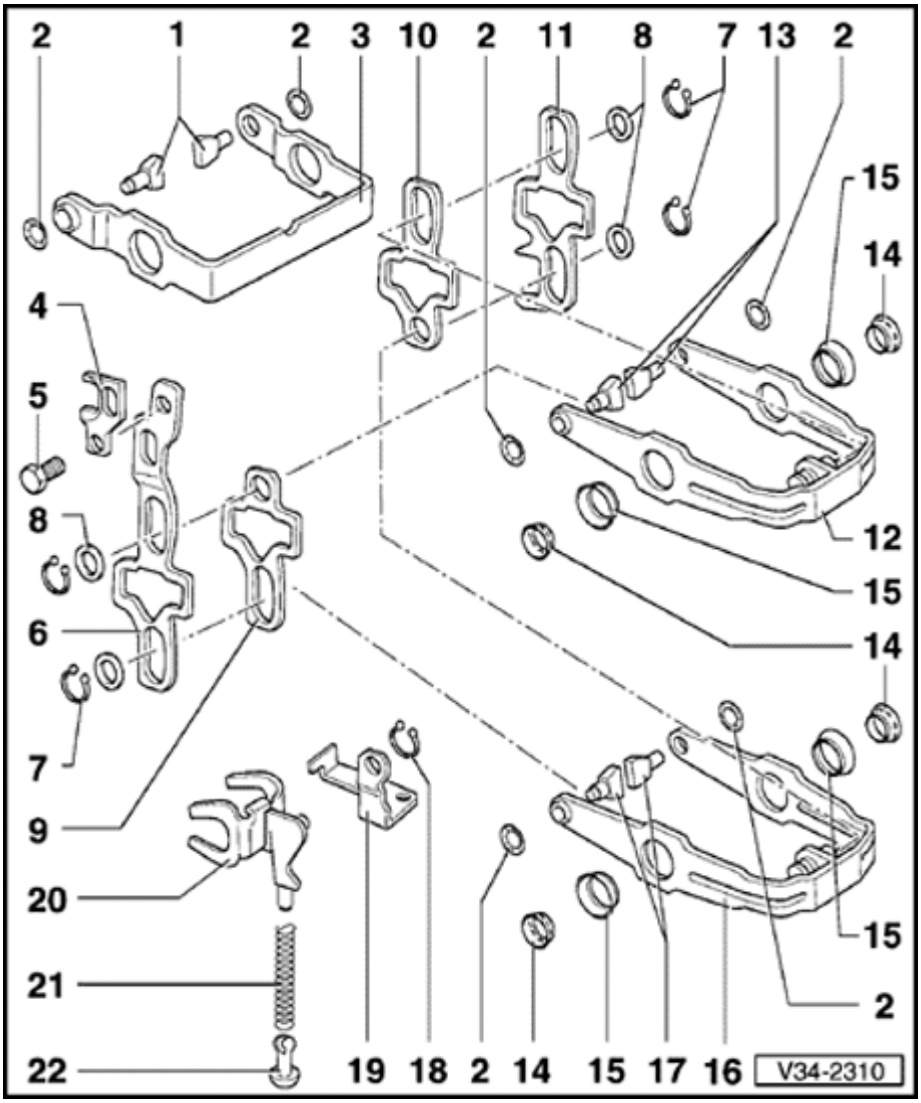

6 - 5th gear selector plate

7 - Circlip

8 - Washer

9 - 3rd gear (3GR)/4th gear (4GR) selector plate

10 - 1st/2nd gear selector plate

11 - Reverse gear selector plate

12 - 3rd gear (3GR)/4th gear (4GR) shift fork

- With shift segments ⇒ Fig. 5

13 - Shift segment

- Identification ⇒ Fig. 1
- After installing the circlip the segment must rotate freely

14 - Bearing

34-96

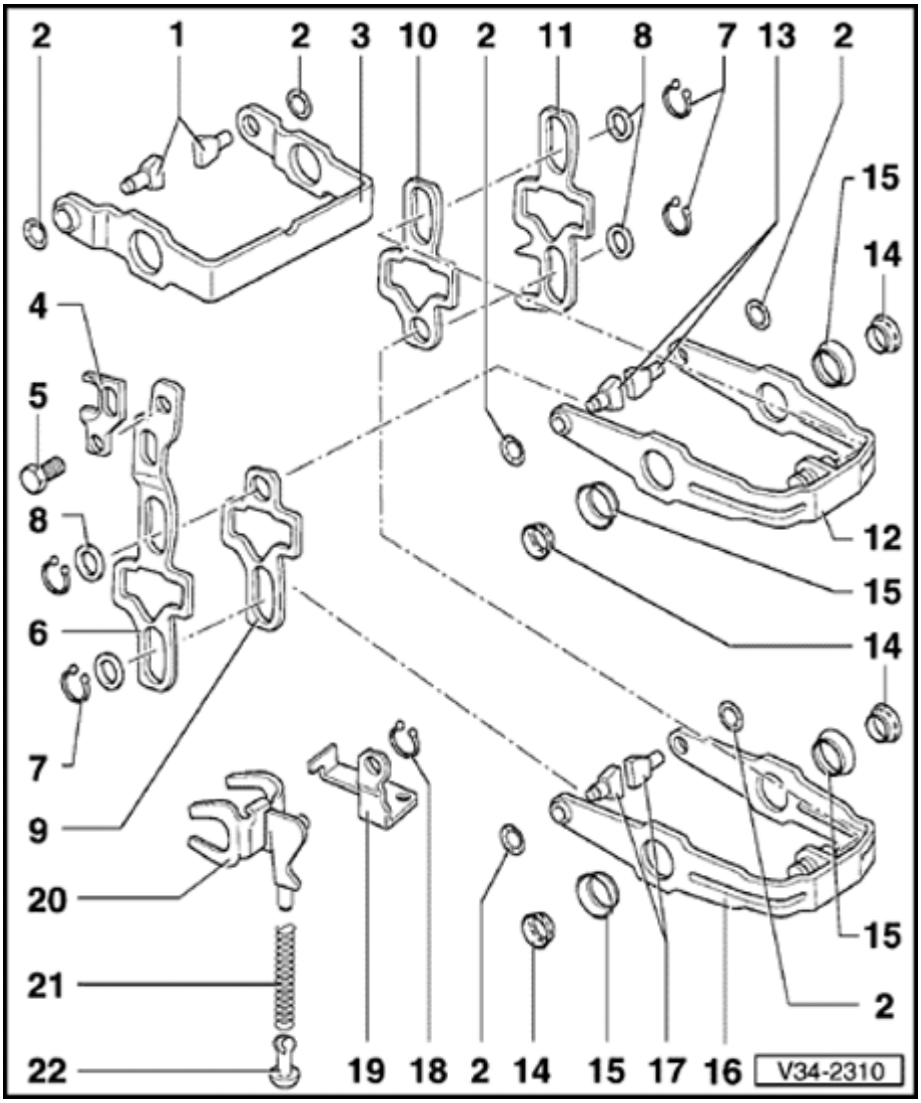

15 - Bearing inner race

- Removing ⇒ Fig. 3
- Installing ⇒ Fig. 4

16 - 1st/2nd gear shift fork

- With shift segments ⇒ Fig. 5

17 - Shift segment

- Identification ⇒ Fig. 1
- After installing the circlip the segment must rotate freely

18 - Circlip

19 - Support for reverse gear shift fork

20 - 21Reverse gear shift fork

22 - Spring

23 - Domed sliding piece

34-97

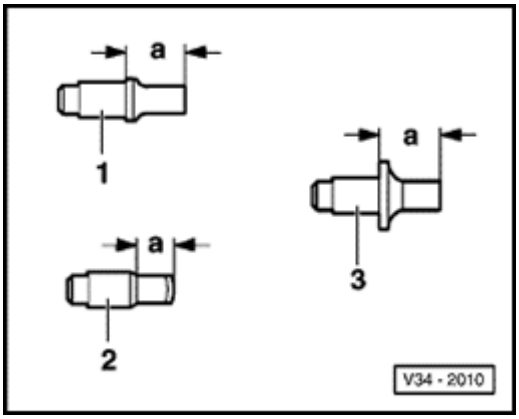

Fig. 1 Identifying shift segments

Dimension -a-

1 - 1st and 2nd gear selector segments = 12.1 mm

2 - 3rd gear (3GR) and 4th gear (4GR) shift segments = 7.7 mm

3 - 5th gear selector segments = 12.1 mm

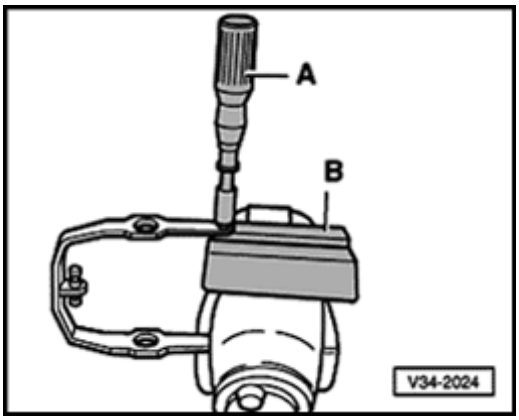

Fig. 2 Installing circlip

- Press circlip into shift segment groove with socket.

  A - Socket, 10 mm A/F

  B - Vice clamps

Note:

After installing the circlip the selector segment must rotate freely.

34-98

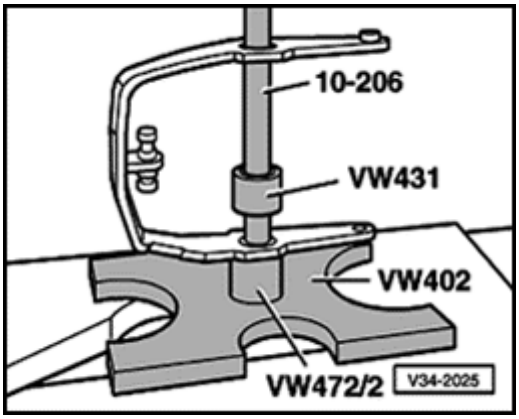

Fig. 3 Removing bearing inner race

CAUTION!

Be careful not to bend shift forks when removing and installing inner race.

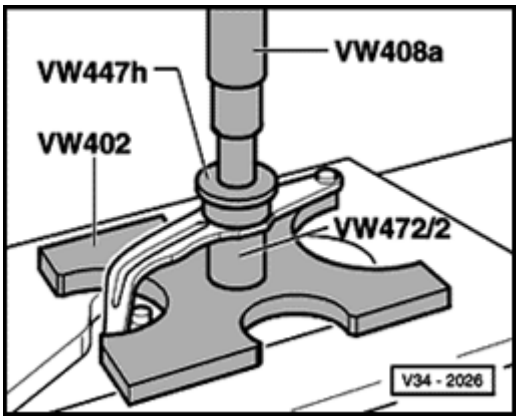

Fig. 4 Installing bearing inner race

- Press in up to stop

34-99

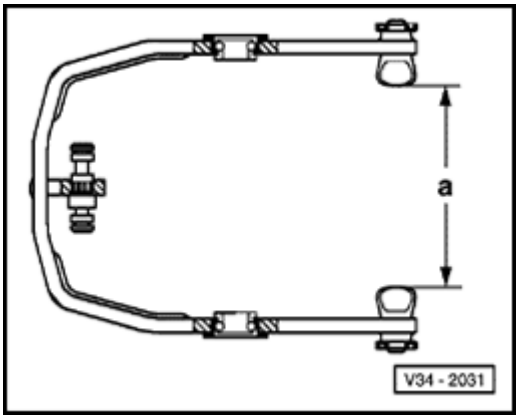

Fig. 5 Shift fork with installed shift segments

Application	Dim. -a- (mm)
1st/2nd gear selector fork	87.2 to 87.9
3rd gear (3GR)/4th gear (4GR) shift forks	96.0 to 96.7

Shift segment assignment ⇒ Fig. 1 .

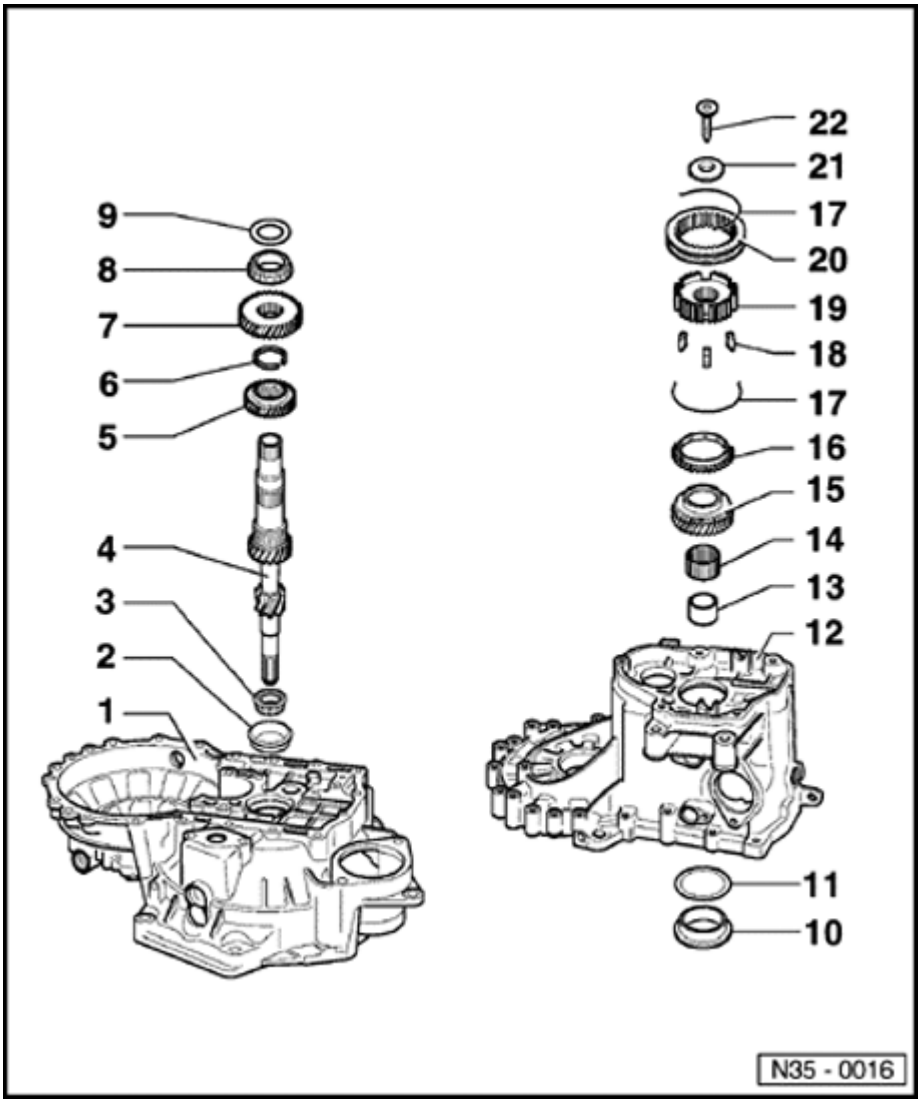

Input shaft, disassembling and assembling

Notes:

- *When installing new gears, refer to technical data ⇒ Page 00-3 .*
- *Whenever the installed position of the input shaft tapered roller bearings is disturbed during parts replacement, the input shaft must be re-adjusted. Adjustment overview ⇒ Page 39-24*

1 - Clutch housing

2 - Taper roller bearing outer race

- Removing ⇒ Fig. 1
- Pressing in ⇒ Fig. 2

3 - Taper roller bearing inner race

- Drive race off input shaft using drift
- Pressing on ⇒ Fig. 3

35-2

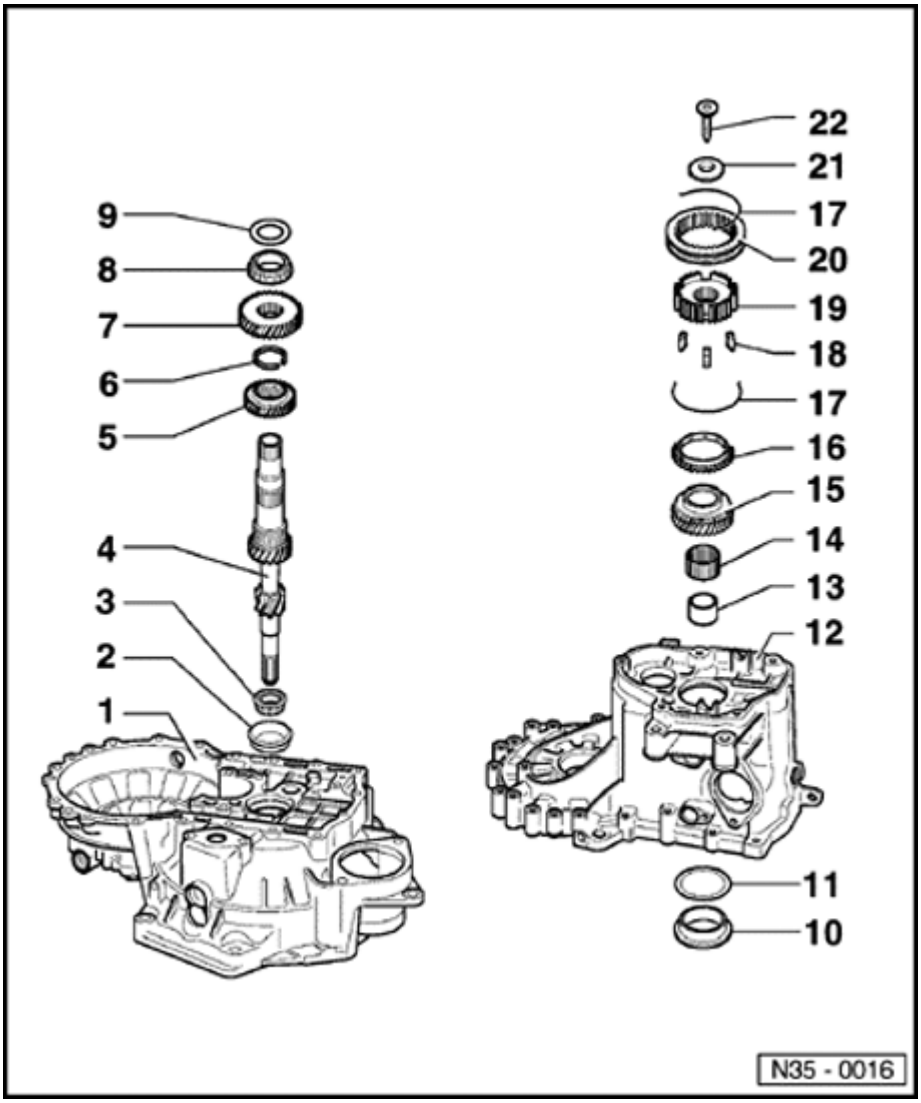

4 - Input shaft

- Adjusting ⇒ Page 35-13

5 - 3rd gear (3GR)

- Shoulder faces toward 4th gear (4GR)
- Removing ⇒ Fig. 5
- Pressing on ⇒ Fig. 6

6 - Circlip

- Always replace

7 - 4th gear (4GR)

- Removing: Press off along with tapered roller bearing outer race and sleeve - 13 - ⇒ Fig. 4
- Pressing on ⇒ Fig. 7
- Shoulder faces toward 3rd gear (3GR)

8 - Taper roller bearing inner race

- Removing: Press off along with 4th gear (4GR) and sleeve - 13 - ⇒ Fig. 4
- Pressing on ⇒ Fig. 8

35-3

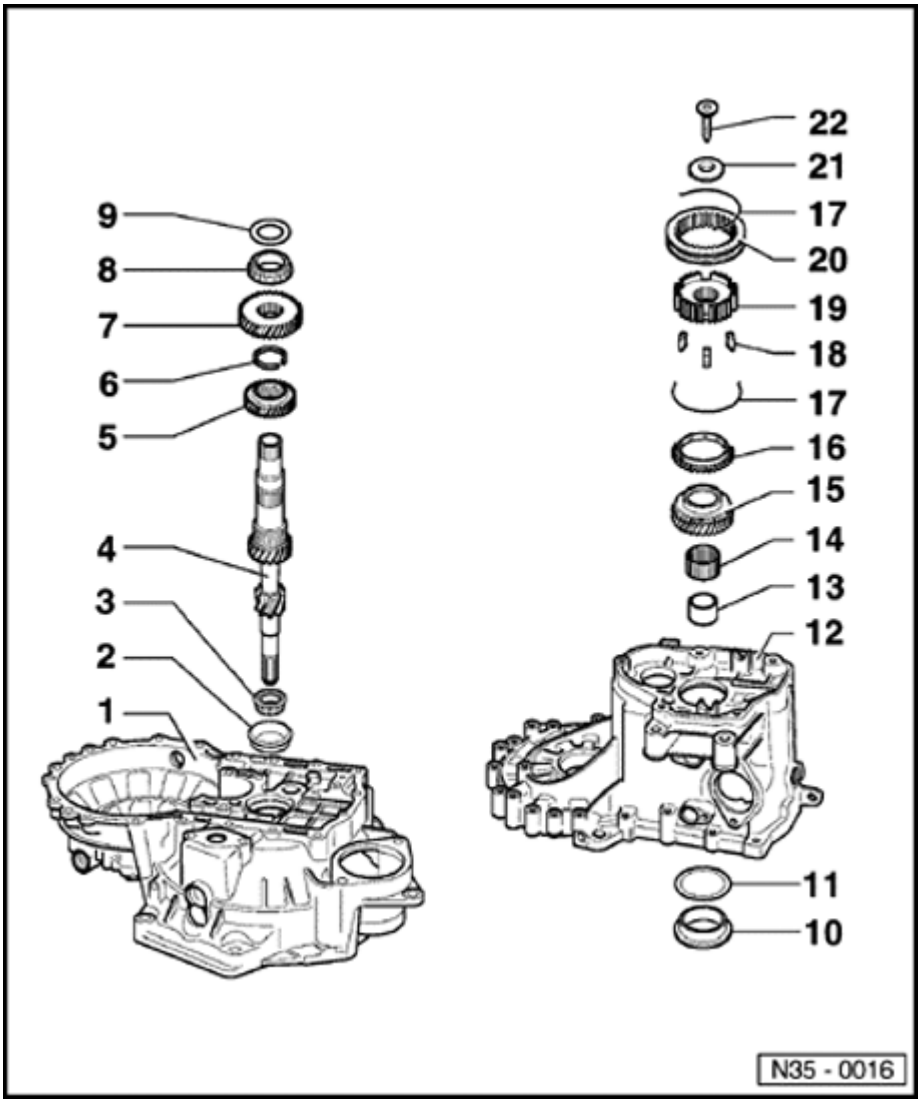

9 - Thrust washer

10 - Taper roller bearing outer race

- Pressing out ⇒ Fig. 10
- Pressing in ⇒ Fig. 11

11 - Shim

- Determining thickness ⇒ adjusting input shaft, ⇒ Page 35-13

12 - Transmission housing

13 - Sleeve

- For needle roller bearing
- Press off along with 4th gear (4GR) and tapered roller bearing inner race ⇒ Fig. 4
- Pressing on ⇒ Fig. 9
- Installing: Place thrust washer - 9 - in position first

14 - Needle roller bearing

15 - 5th gear

- Pull off together with 5th gear synchro-hub ⇒from ⇒ Page 34-60

35-4

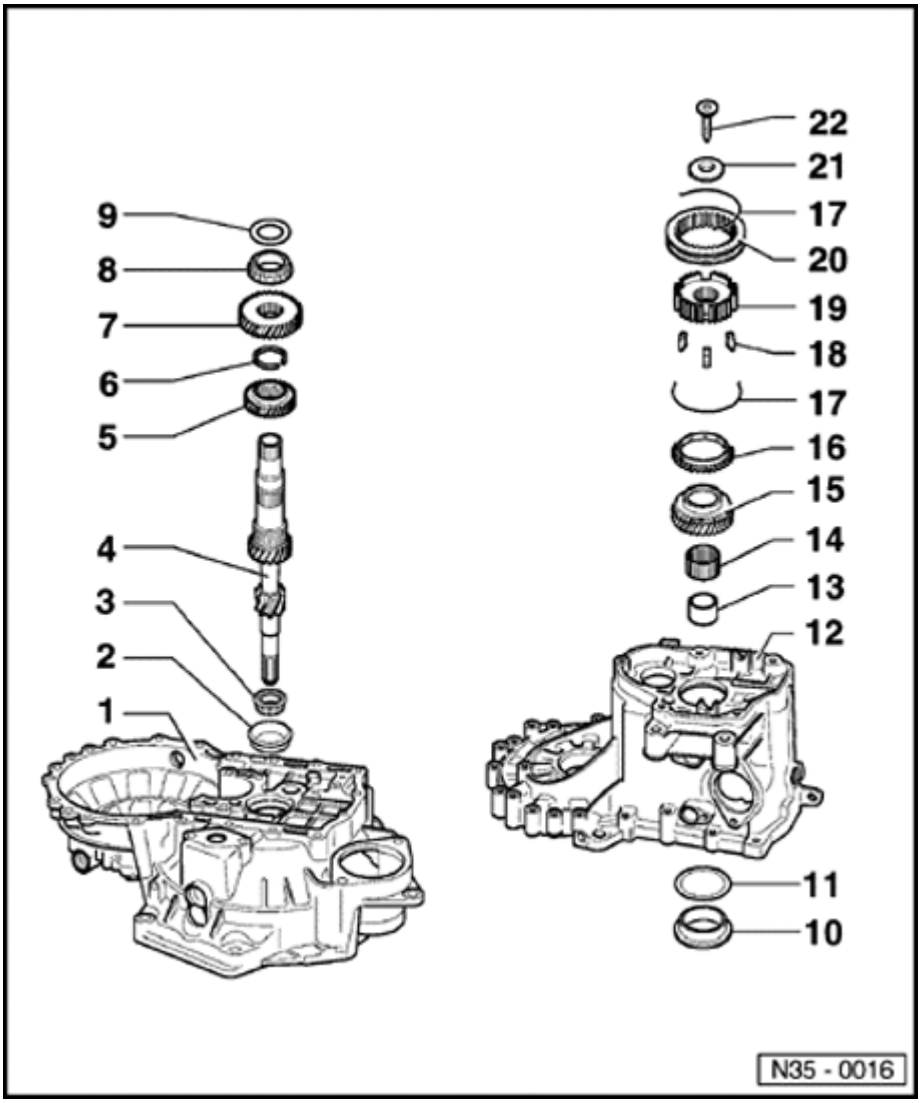

16 - 5th gear synchronizer

- With cast locking lugs on synchro-ring ⇒ Illustration N35-0018, ⇒ Page 34-74
- Checking for wear ⇒ Page 34-73

17 - Spring

- Installation position ⇒ Fig. 13

18 - Lock pieces

- Quantity: 3
- Installation position ⇒ Fig. 12

19 - 5th gear synchronizer hub (synchro-hub)

- Removing and installing ⇒ Page 34-60

20 - 5th gear operating sleeve

- Removing and installing ⇒ Page 34-60

35-5

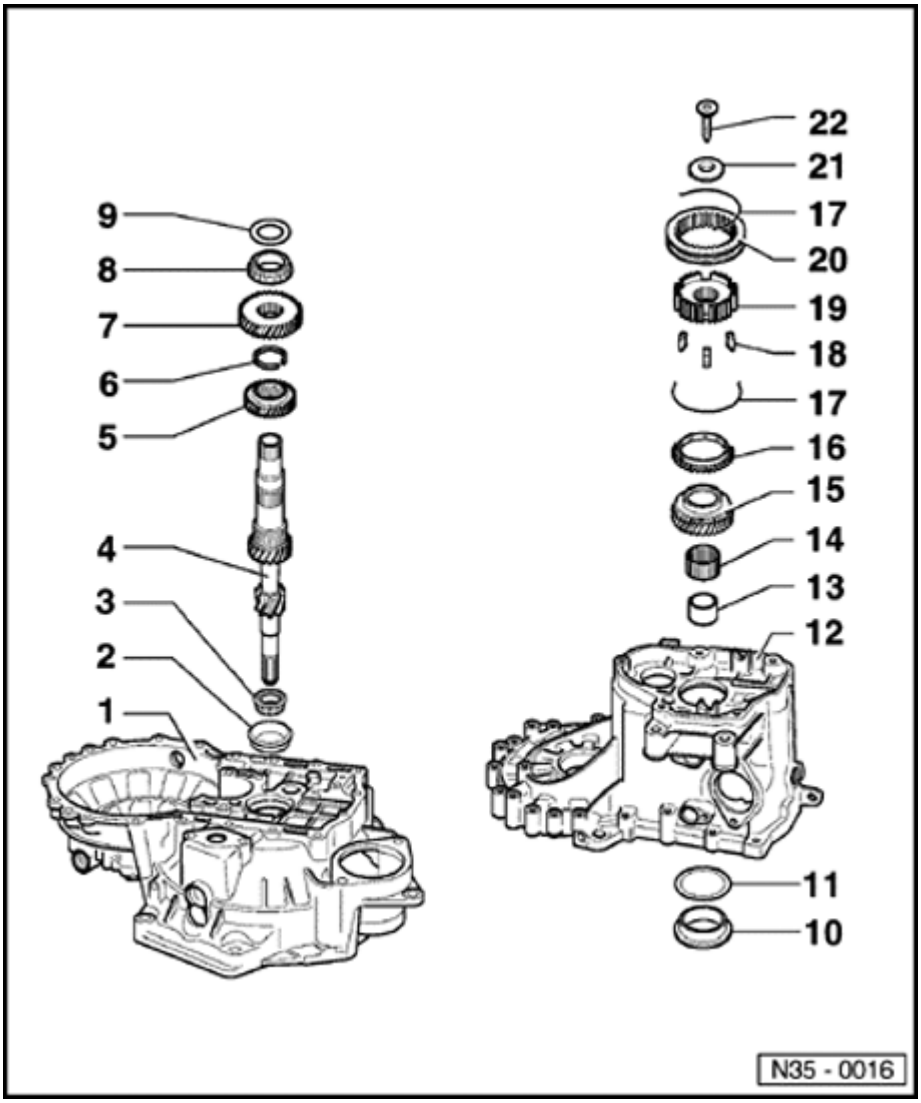

21 - Belleville spring washer

- Installation position ⇒ Page 34-75

22 - 23Torx socket-head bolt

- M10
- Tightening torque: 80 Nm (59 ft lb)

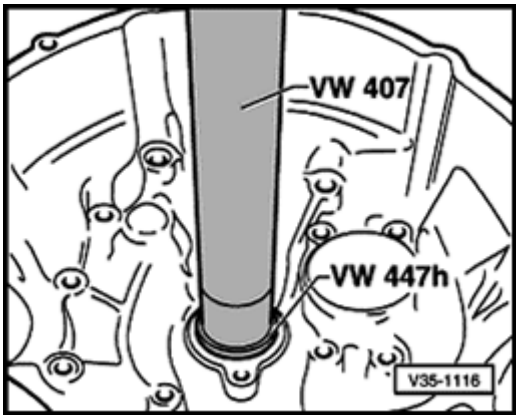

Fig. 1 Pressing out tapered roller bearing outer race

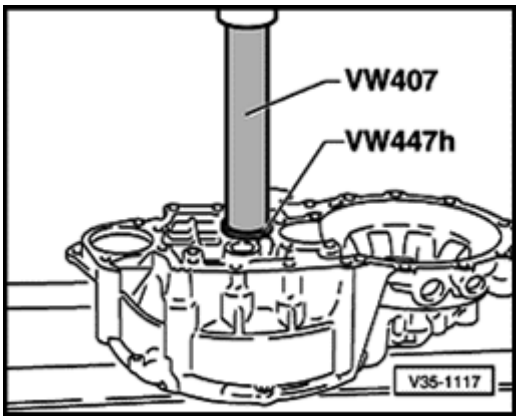

Fig. 2 Pressing in tapered roller bearing outer race

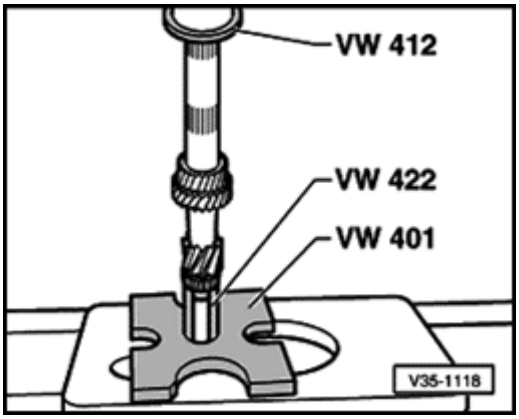

Fig. 3 Pressing on tapered roller bearing inner race

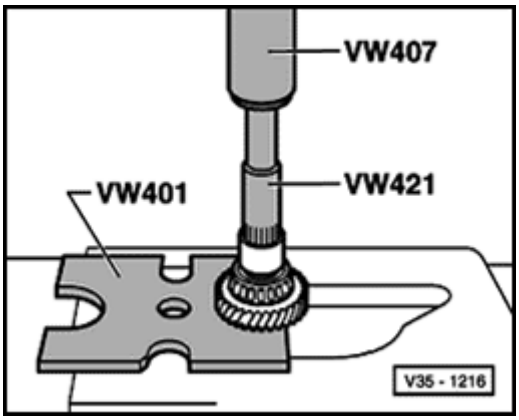

Fig. 4 Pressing off 4th gear (4GR) along with tapered roller bearing inner race and sleeve

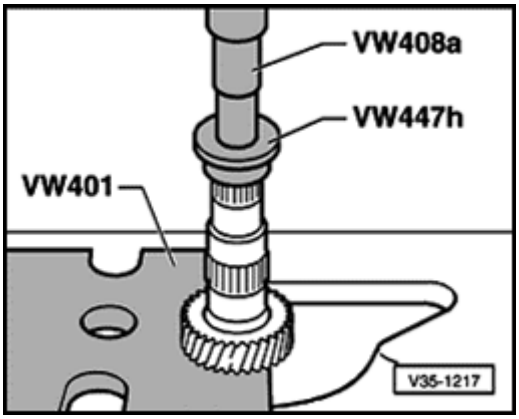

Fig. 5 Pressing off 3rd gear (3GR)

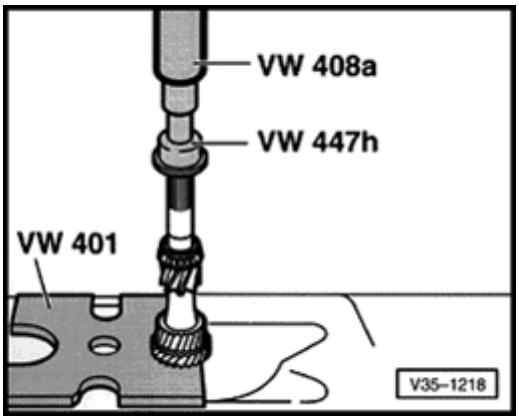

Fig. 6 Pressing on 3rd gear (3GR)

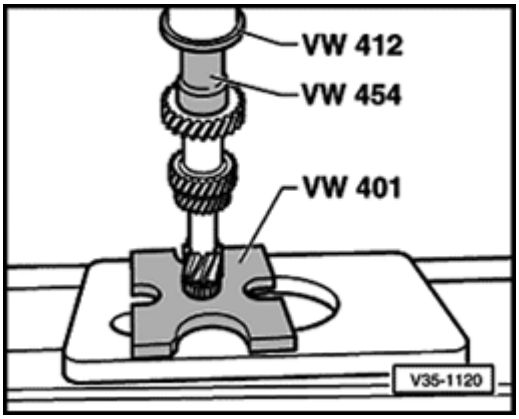

Fig. 7 Pressing on 4th gear (4GR)

Shoulder points to 3rd gear.

- Shoulder faces toward 3rd gear (3GR)

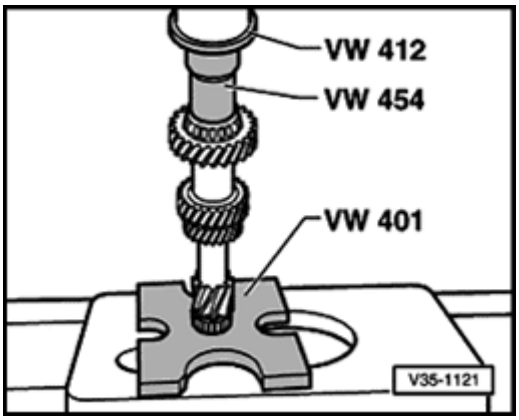

Fig. 8 Pressing on tapered roller bearing inner race

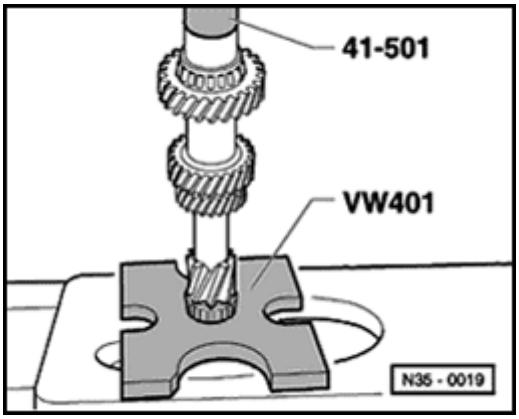

Fig. 9 Pressing on sleeve for needle roller bearing

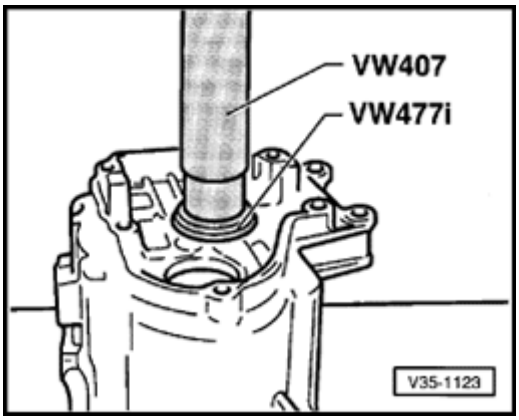

Fig. 10 Pressing off tapered roller bearing outer race

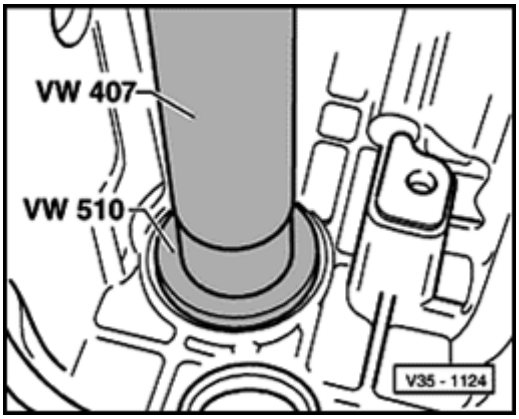

Fig. 11 Pressing in tapered roller bearing outer race

- Insert with shim after adjusting input shaft.

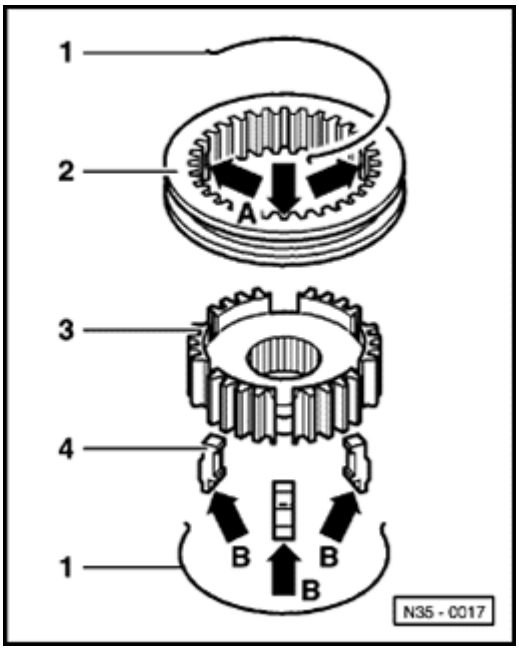

Fig. 12 5th gear synchronizer

1 - Springs

2 - Operating sleeve

- With three recesses (arrows -A-) for additional locking pieces -4-

3 - Synchronizer

4 - Locking pieces

- Installed position: tapered ends (arrows -B-) face sharp teeth of operating sleeve -2-

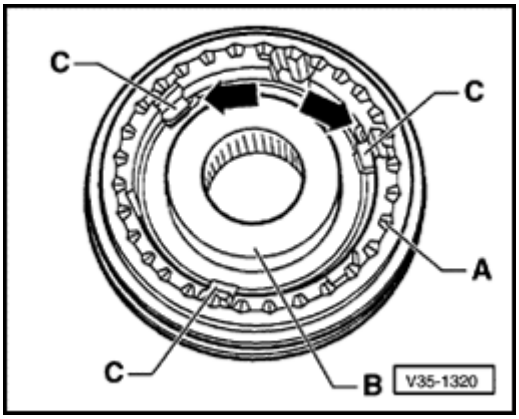

Fig. 13 Assembling 5th gear operating sleeve and synchro-hub

- Press operating sleeve onto synchro-hub.
  - ♦ Pointed teeth -A- and shoulder -B- on synchro-hub face same direction
  - ♦ Recesses for locking pieces, in synchro-hub and in operating sleeve, must be aligned ⇒ Fig. 12
- Insert locking pieces (Installation position: ⇒ Fig. 12).
- Install springs under lugs -C-, offset by 120°, under stops -C-.
  - ♦ Spring must act on all three locking pieces
  - ♦ Position angled ends directly behind two locking pieces (-arrows-)

Input shaft, adjusting

(Determining thickness of shim for input shaft)

It is necessary to re-adjust the input shaft when any of the following is replaced:

- Transmission housing
- Clutch housing
- Input shaft
- 4th gear (4GR)
- Input shaft tapered roller bearing

Adjustment overview ⇒ Page 39-24

- Press tapered roller bearing outer race, without adjustment shim, into transmission housing to stop.
  - Use thrust pad VW 510
- Install input shaft into clutch housing, then install transmission housing
  - Tightening torque: 25 Nm (18 ft lb) plus additional 90°

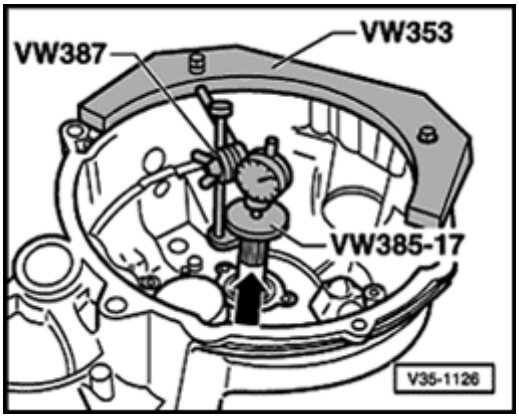

- Install measuring fixture and dial indicator in clutch housing.
  - Large tapered roller bearing in transmission housing

- Before taking any measurements, rotate input shaft to settle bearings.

- Adjust dial indicator to zero with 1 mm preload.

CAUTION!

Repeat the procedure for each measurement, otherwise the dial indicator will not return to its original position.

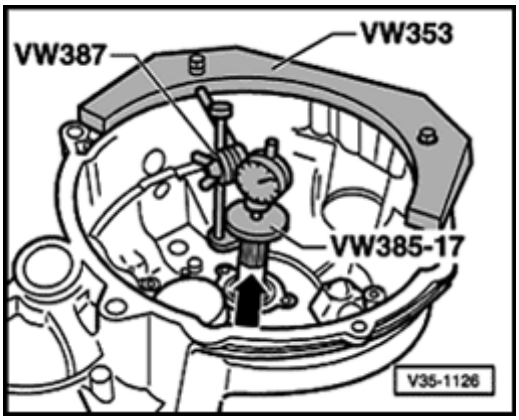

- Press input shaft in direction of dial indicator (-arrow-).
- Read and record play indicated on dial indicator.
  - Example: 1.21 mm

Note:

Dial indicator does not return to its original position.

- Determine required thickness of adjustment shim from table ⇒ Page 35-15 . Example: 1.175 mm
- Remove input shaft and press tapered roller bearing outer race out of transmission housing.
  - Use tool VW 447i
- Press tapered roller bearing outer race back into transmission housing with 1.175 mm shim (example).
- Install transmission housing.
  - Tightening torque: 25 Nm (18 ft lb) plus additional 90° ($^1/_4$ -turn)

35-15

Table of adjustment shims

Input shaft	Shim	
measured play - mm	Thickness - mm	Part No.
0.671 to 0.699 0.700 to 0.724 0.725 to 0.749	0.650 0.675 0.700	02A 311 140 02A 311 140 A 02A 311 140 B
0.750 to 0.744 0.775 to 0.799 0.800 to 0.824	0.725 0.750 0.775	02A 311 140 C 02A 311 140 D 02A 311 140 E
0.825 to 0.849 0.850 to 0.874 0.875 to 0.899	0.800 0.825 0.850	02A 311 140 F 02A 311 140 G 02A 311 140 H
0.900 to 0.924 0.925 to 0.949 0.950 to 0.974	0.875 0.900 0.925	02A 311 140 J 02A 311 140 K 02A 311 140 L
0.975 to 0.999 1.000 to 1.024 1.025 to 1.049	0.950 0.975 1.000	02A 311 140 M 02A 311 140 N 02A 311 140

		P
1.050 to 1.074 1.075 to 1.099 1.100 to 1.124	1.025 1.050 1.075	02A 311 140 Q 02A 311 140 R 02A 311 140 S
1.125 to 1.149 1.150 to 1.174 1.175 to 1.199	1.100 1.125 1.150	02A 311 140 T 02A 311 140 AA 02A 311 140 AB

35-16

Input shaft	Shim	
measured play - mm	Thickness - mm	Part No.
1.200 to 1.224 1.225 to 1.249 1.250 to 1.274	1.175 1.200 1.225	02A 311 140 AC 02A 311 140 AD 02A 311 140 AE
1.275 to 1.229 1.300 to 1.324	1.250 1.275	02A 311 140 AF 02A 311 140 AG
1.325 to 1.349	1.300	02A 311 140 02A 311 140
1.350 to 1.374	1.325	02A 311 140 02A 311 140 A
1.375 to 1.399	1.350	02A 311 140 A 02A 311 140 A
1.400 to 1.424	1.375	02A 311 140 A 02A 311 140 B
1.425 to 1.449	1.400	02A 311 140 B 02A 311 140 B
1.450 to 1.474	1.425	02A 311 140 B 02A 311 140 C
1.475 to 1.499	1.450	02A 311 140 C 02A 311 140 C
1.500 to 1.524	1.475	02A 311 140 C 02A 311 140 D

35-17

Input shaft	Shim	
measured play - mm	Thickness - mm	Part No.
1.525 to 1.549	1.500	02A 311 140 D 02A 311 140 D
1.550 to 1.574	1.525	02A 311 140 D 02A 311 140 E
1.575 to 1.599	1.550	02A 311 140 E 02A 311 140 E
1.600 to 1.624	1.575	02A 311 140 E 02A 311 140 F
1.625 to 1.649	1.600	02A 311 140 F 02A 311 140 F
1.650 to 1.674	1.625	02A 311 140 F 02A 311 140 G
1.675 to 1.699	1.650	02A 311 140 G 02A 311 140 G
1.700 to 1.724	1.675	02A 311 140 G 02A 311 140 H
1.725 to 1.749	1.700	02A 311 140 H 02A 311 140 H
1.750 to 1.774	1.725	02A 311 140 H 02A 311 140 J
1.775 to 1.791	1.750	02A 311 140 J 02A 311 140 J

35-18

Checking adjustment

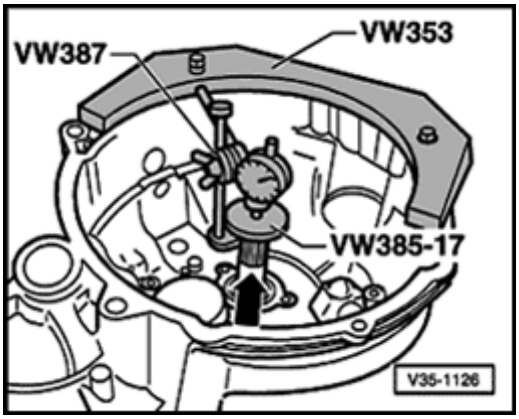

- Install measuring fixture and dial indicator.
- Rotate input shaft to settle tapered roller bearings.
- Press input shaft in direction of arrow and read axial play on dial indicator:

♦ Minimum bearing play = 0.01 mm (0.0004 in.)

♦ Maximum bearing play = 0.09 mm (0.0035 in.)

Note:

If the bearing play cannot be measured, but there is perceptible input shaft play and the input shaft turns freely, the adjustment is acceptable.

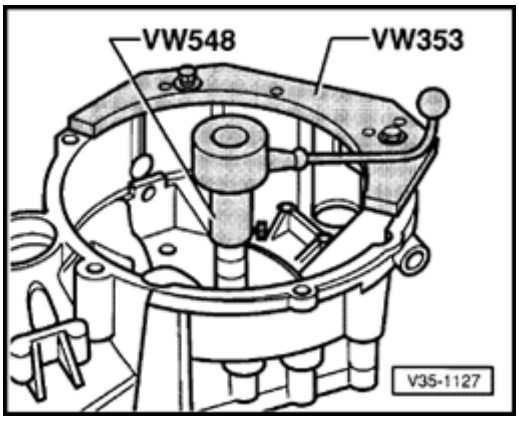

- Frictional moment (turning torque at bearing preload): max. 20 Ncm (1.8 in lb)

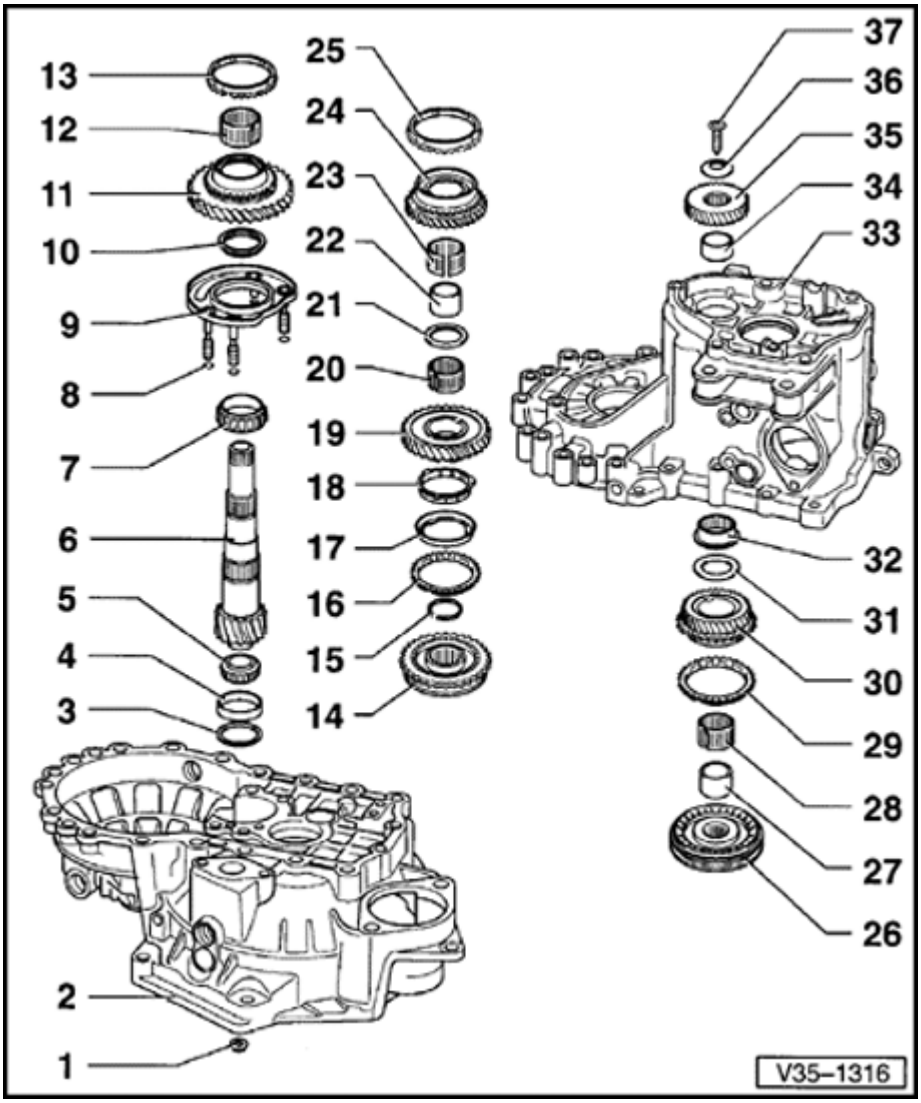

Output shaft, disassembling/ assembling

Notes:

- *The output shaft is dismantled as follows:*

- Position separating device under 2nd gear - 19 - and press off ⇒ Fig. 5

- Remove circlip (item 15).

- Position two-arm puller under pinion bearing support - 9 - and pull off operating sleeve along with 1st/2nd hear synchro-hub ⇒ Fig. 6 .

- *When installing new gears or a new output shaft, refer to technical data ⇒ Page 00-3 .*
- *Output shaft, removing/installing ⇒ Page 34-57 .*
- *Both tapered roller bearings must be replaced together, as a set.*

35-20

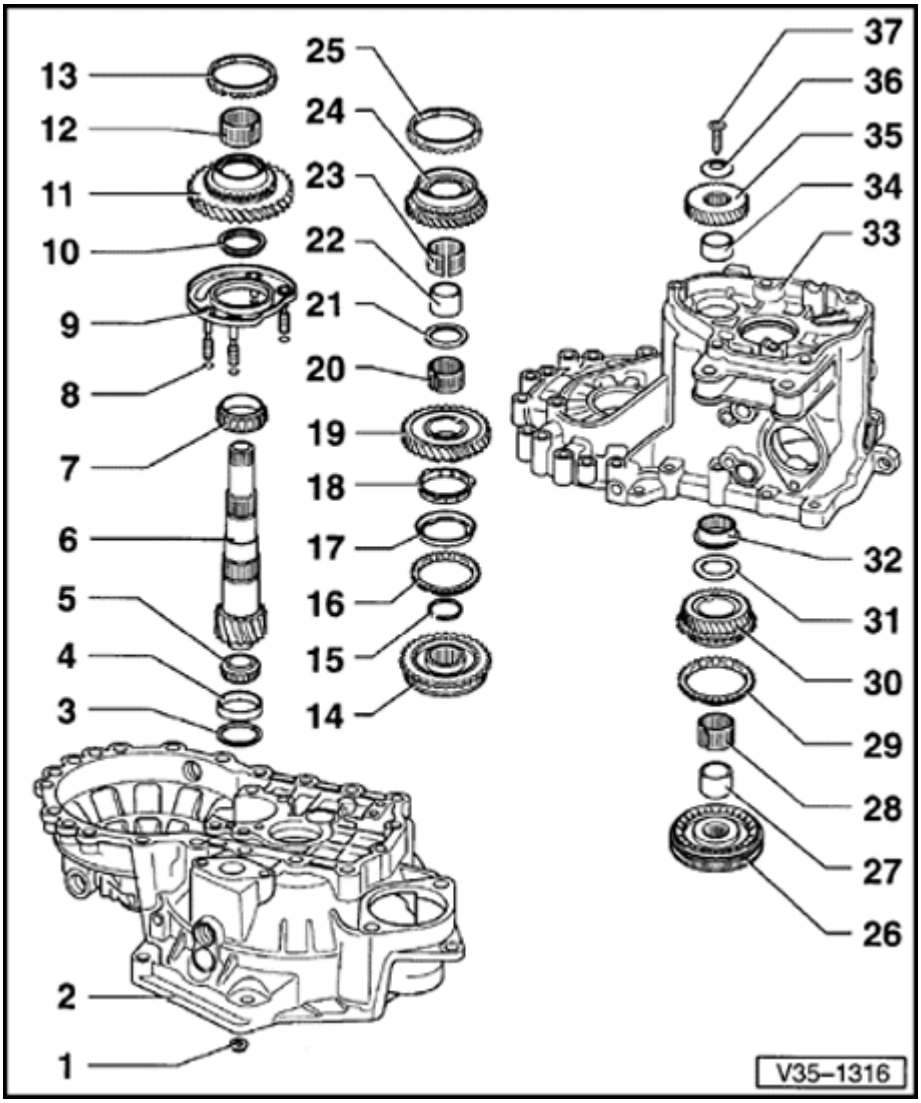

1 - Hex nut

- Tightening torque: 25 Nm (18 ft lb), plus additional 90° ($^1/_4$ - turn)
- For bearing support - 9 -
- Quantity: 4

2 - Clutch housing

3 - Shim

- Determining thickness - adjusting output shaft ⇒ Page 35-43

4 - Small taper roller bearing outer race

- Removing ⇒ Fig. 1
- Pressing in ⇒ Fig. 2

35-21

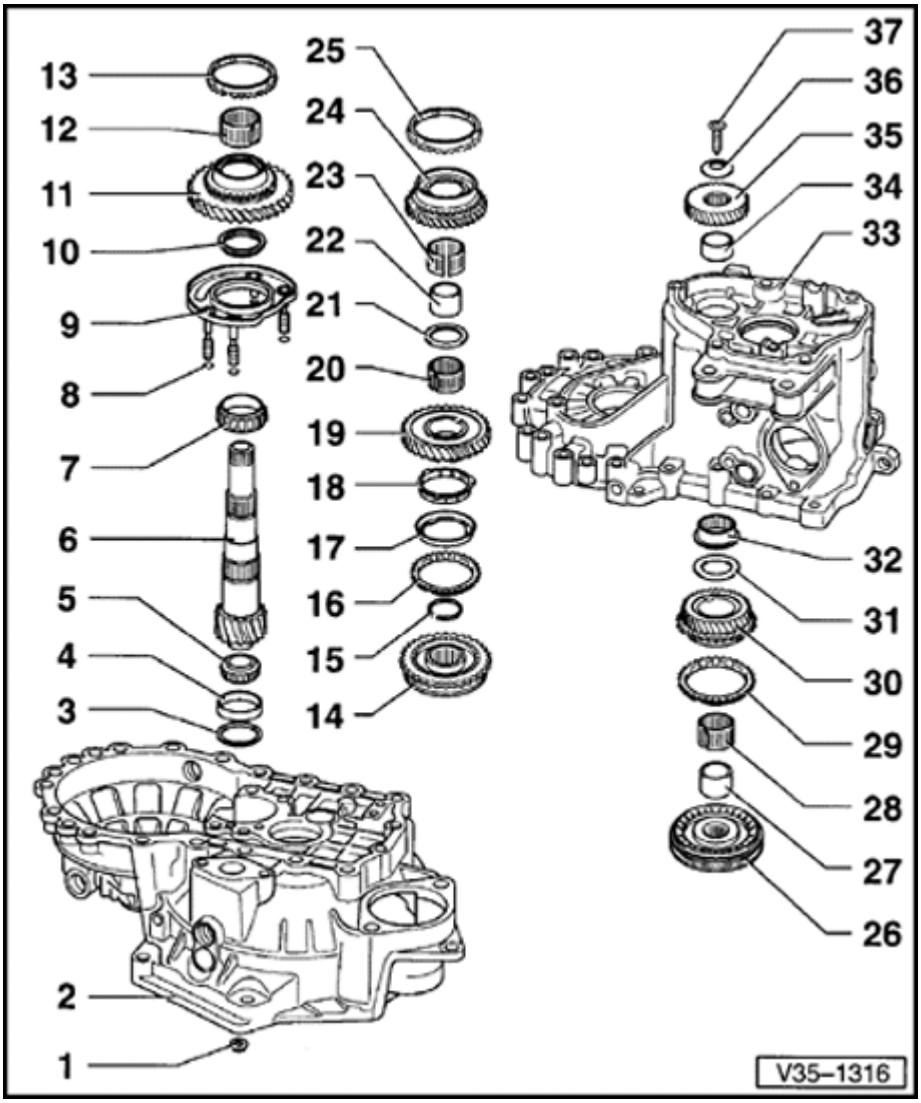

5 - Small taper roller bearing inner race

- Pulling off ⇒ Fig. 3
- Pressing on ⇒ Fig. 4

6 - Output shaft

- Paired with final drive gear (differential ring gear); always replace as a set
- Adjusting ⇒ Page 35-43

7 - Large taper roller bearing inner race

- Pulling off ⇒ Fig. 7
- Pressing on ⇒ Fig. 8

8 - Sealing ring

- Install on bolts for bearing support - 9 -
- Quantity: 4

35-22

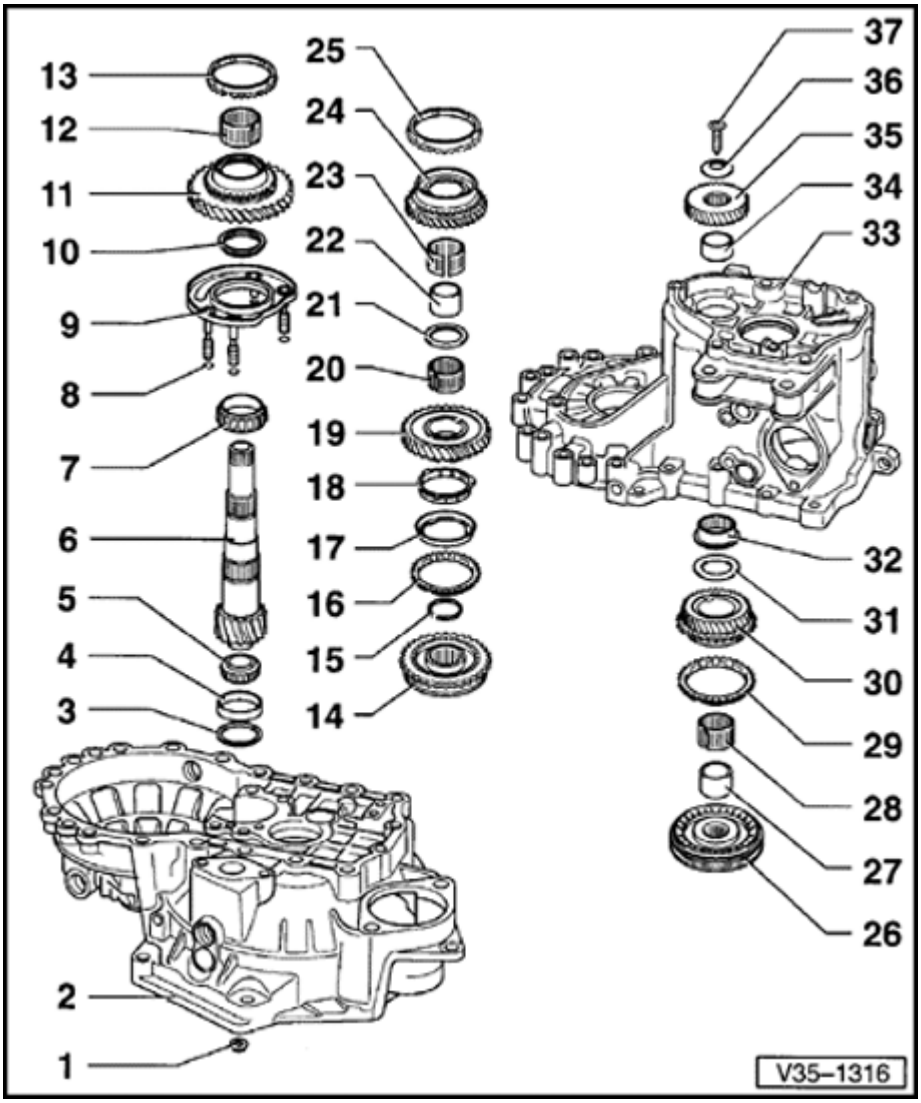

9 - Bearing support

- With large tapered roller bearing outer race and bolts.
- Only replace outer race together with large tapered roller bearing and bearing support

10 - Thrust washer

- Shoulder on thrust washer faces taper roller bearing

11 - 1st gear

12 - Needle roller bearing

- For 1st gear

13 - 1st gear synchronizer ring (synchro-ring)

- Checking for wear ⇒ Fig. 9
- Identification ⇒ Fig. 14

35-23

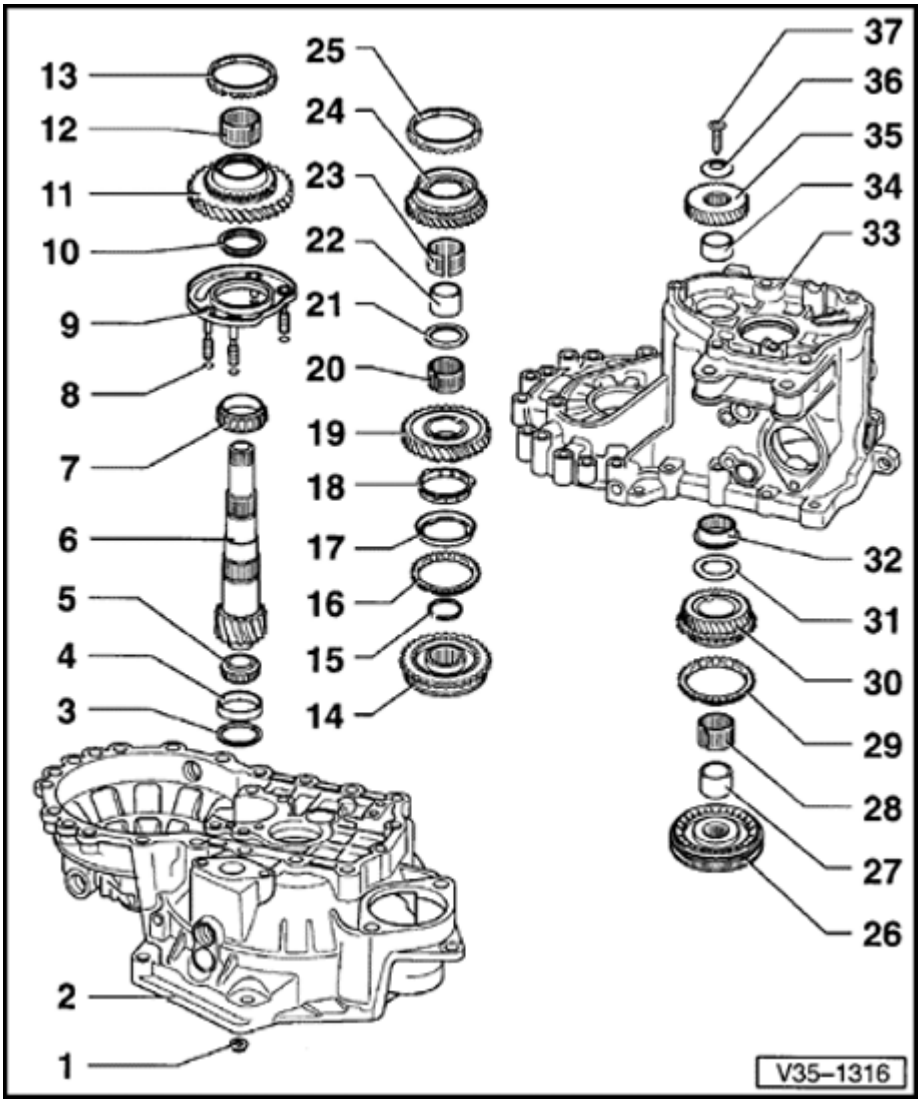

14 - 1st/2nd gear operating sleeve with synchronizer hub (synchro-hub)

- Removing:
  - Remove circlip (item - 15 -)
  - Pull off operating sleeve/synchro-hub assembly using bearing support ⇒ Fig. 6
- Disassembling ⇒ Fig. 10
- Assembling operating sleeve and synchro-hub ⇒ Fig. 10 and ⇒ Fig. 11
- Installed position ⇒ Fig. 12
- Installing ⇒ Fig. 13

15 - Circlip

16 - 2nd gear synchronizer ring (synchro-ring)

- Identification ⇒ Fig. 14
- Checking for wear ⇒ Fig. 16
- Assemble so that recesses engage locking lugs on operating sleeve - 14 -

35-24

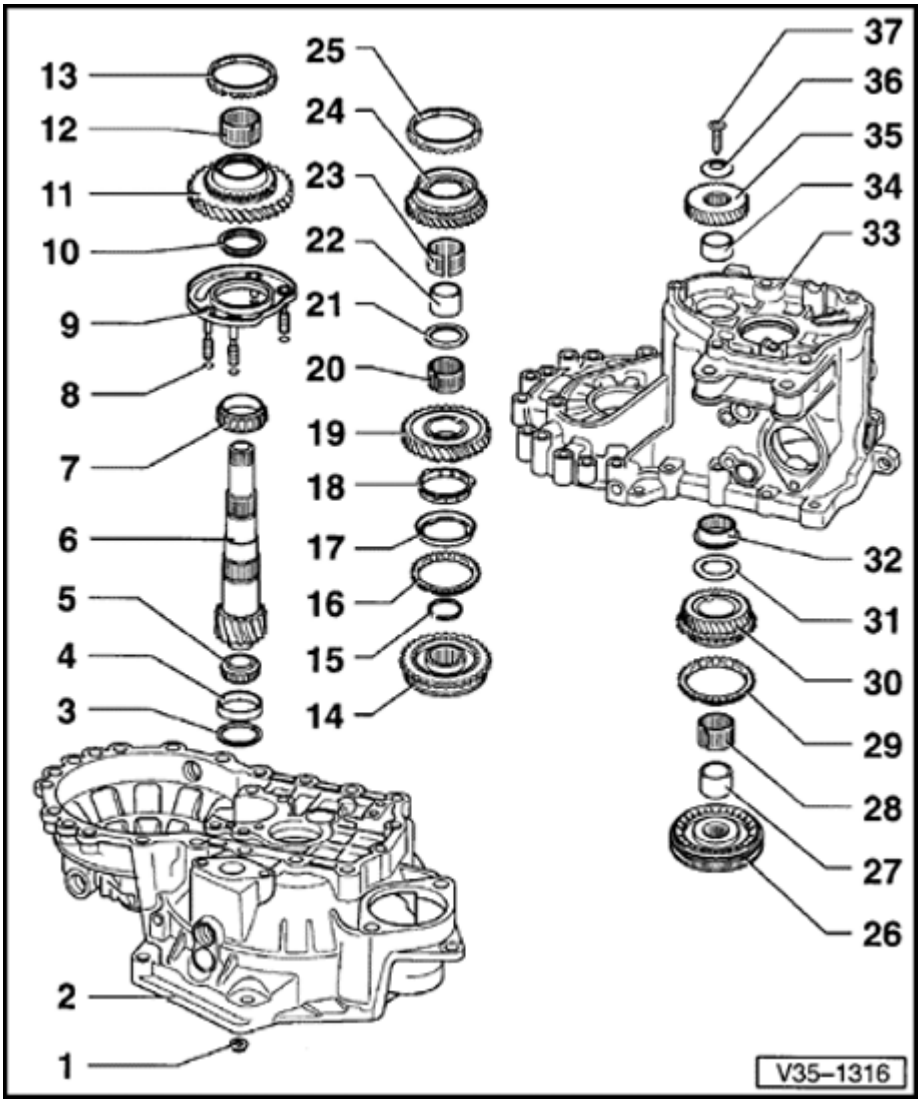

17 - 2nd gear synchronizerouter ring

- Engage in 2nd gear synchro-ring item 16
- Installation position ⇒ Fig. 17
- Replace if scored

18 - 2nd gear synchronizer inner ring

- Checking for wear ⇒ Fig. 18
- Check lugs for scoring
- Installed position ⇒ Fig. 19

19 - 2nd gear

- Installation position ⇒ Fig. 20

20 - Needle roller bearing

- For 2nd gear

35-25

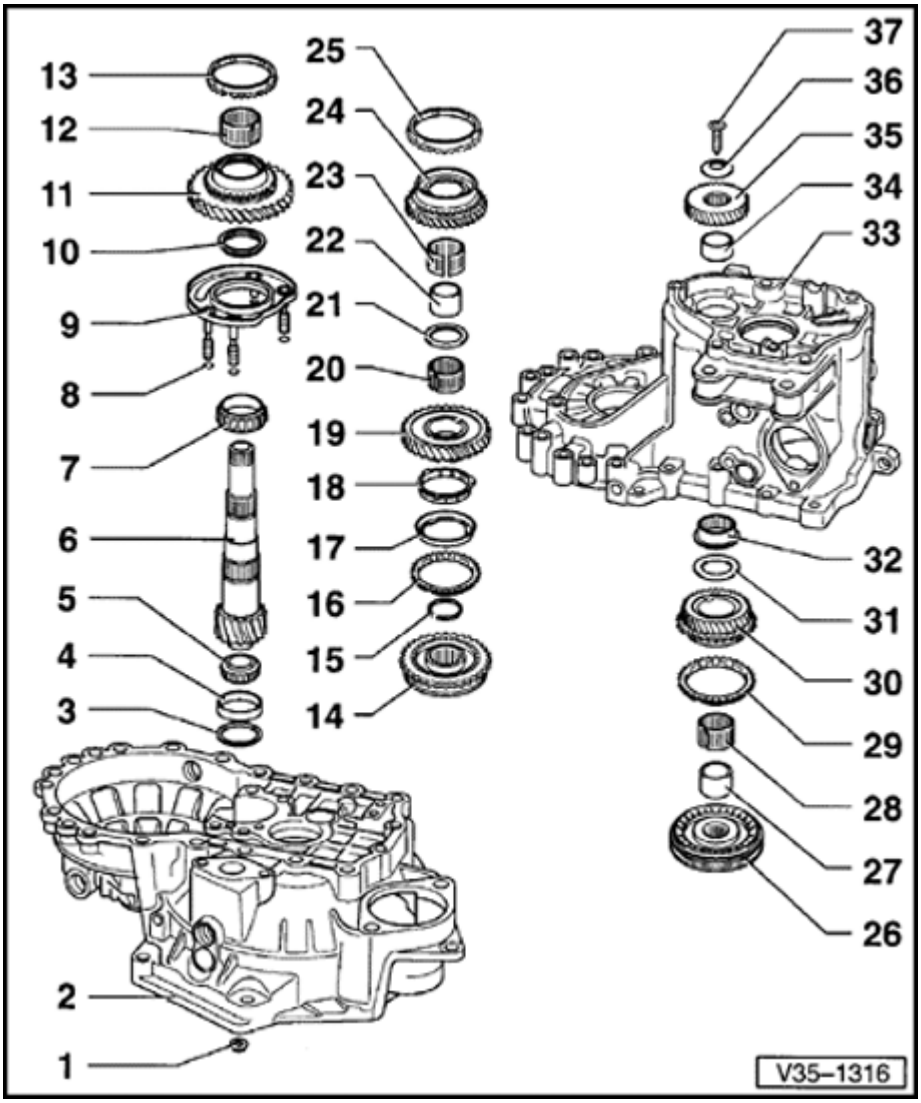

21 - Thrust washer

22 - Sleeve

- For 3rd gear (3GR) needle roller bearing
- Pressing off with 2nd gear ⇒ Fig. 5
- Pressing on ⇒ Fig. 21

23 - Needle roller bearing

- For 3rd gear (3GR)

24 - 3rd gear (3GR)

25 - 3rd gear (3GR) synchronizer ring (synchro-ring)

- Checking for wear ⇒ Fig. 9

35-26

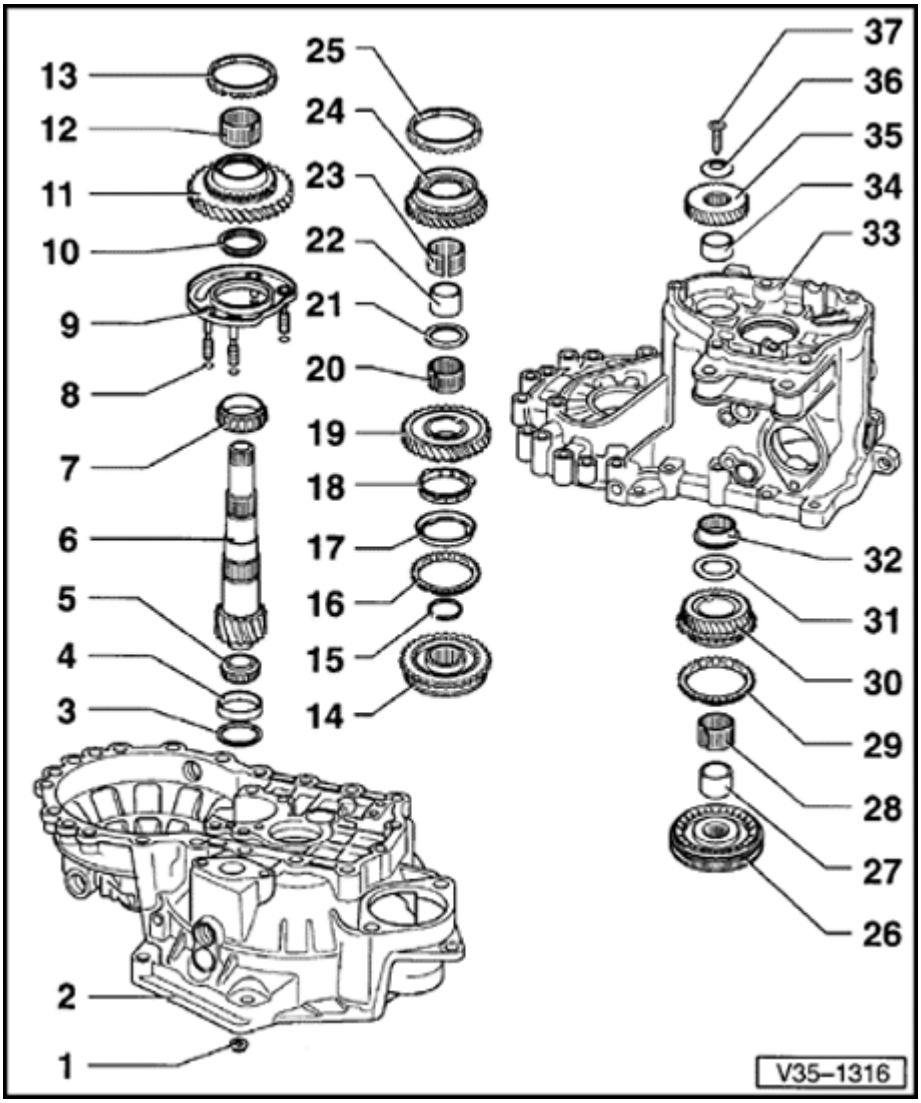

26 - Operating sleeve with synchronizer hub (synchro-hub)

- For 3rd gear (3GR)/ 4th gear (4GR)
- Press off with 2nd gear - 19 - and 3rd gear (3GR) item 24
- Disassembling ⇒ Fig. 22
- Installation position for synchro-hub and operating sleeve ⇒ Fig. 24
- Assembling synchro-hub and operating sleeve ⇒ Fig. 22 and ⇒ Fig. 23
- Pressing on ⇒ Fig. 25

27 - Sleeve

- For needle roller bearing
- Press off with operating sleeve and 3rd gear (3GR)/4th gear (4GR) synchro-hub ⇒ Fig. 5
- Pressing on ⇒ Fig. 26

28 - Needle roller bearing

- For 4th gear (4GR)

35-27

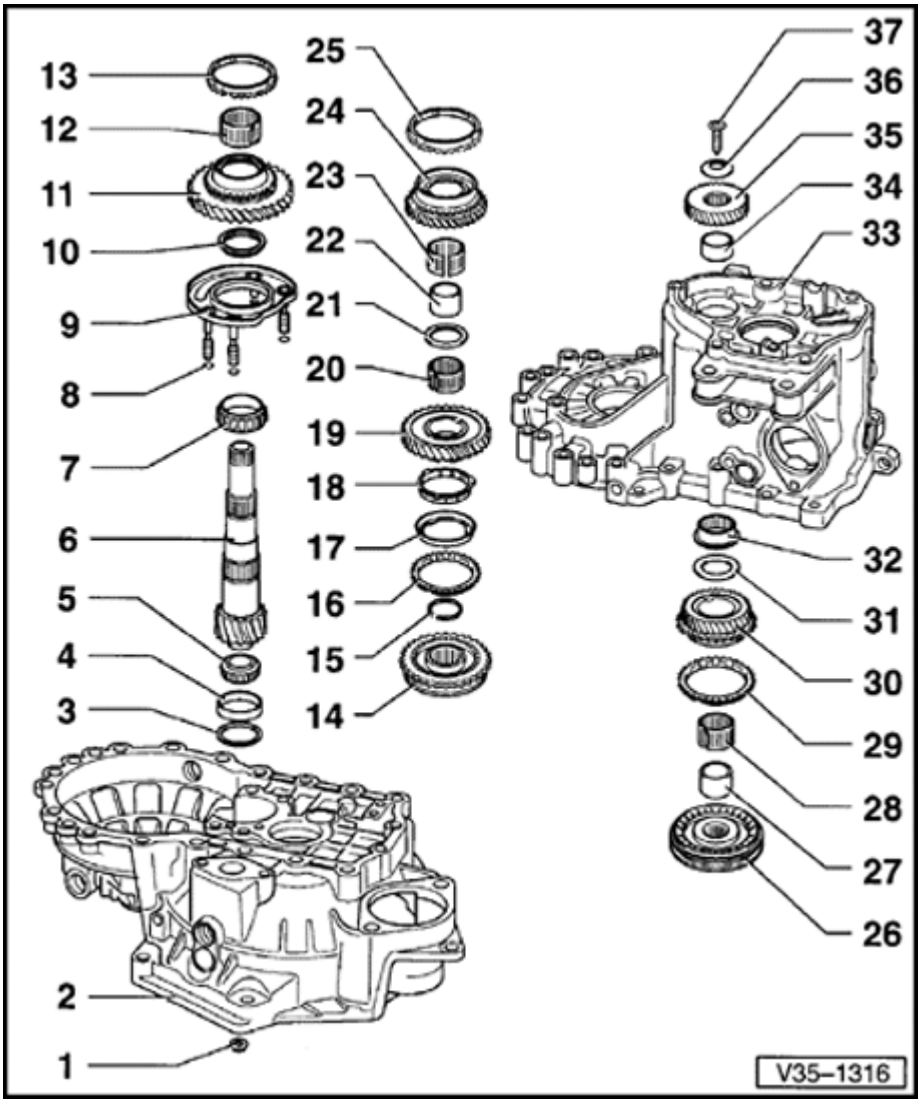

29 - 4th gear (4GR) synchronizer ring (synchro-ring)

- Checking for wear ⇒ Fig. 9

30 - 4th gear (4GR)

31 - Thrust washer

32 - Needle roller bearing

- For output shaft
- Removing and installing ⇒ Page 34-84

33 - Transmission housing

34 - Sleeve

- For output shaft needle roller bearing
- Pressing off ⇒ Fig. 5
- Pressing on ⇒ Fig. 27

35 - 5th gear

- Removing and installing ⇒ Page 34-60

35-28

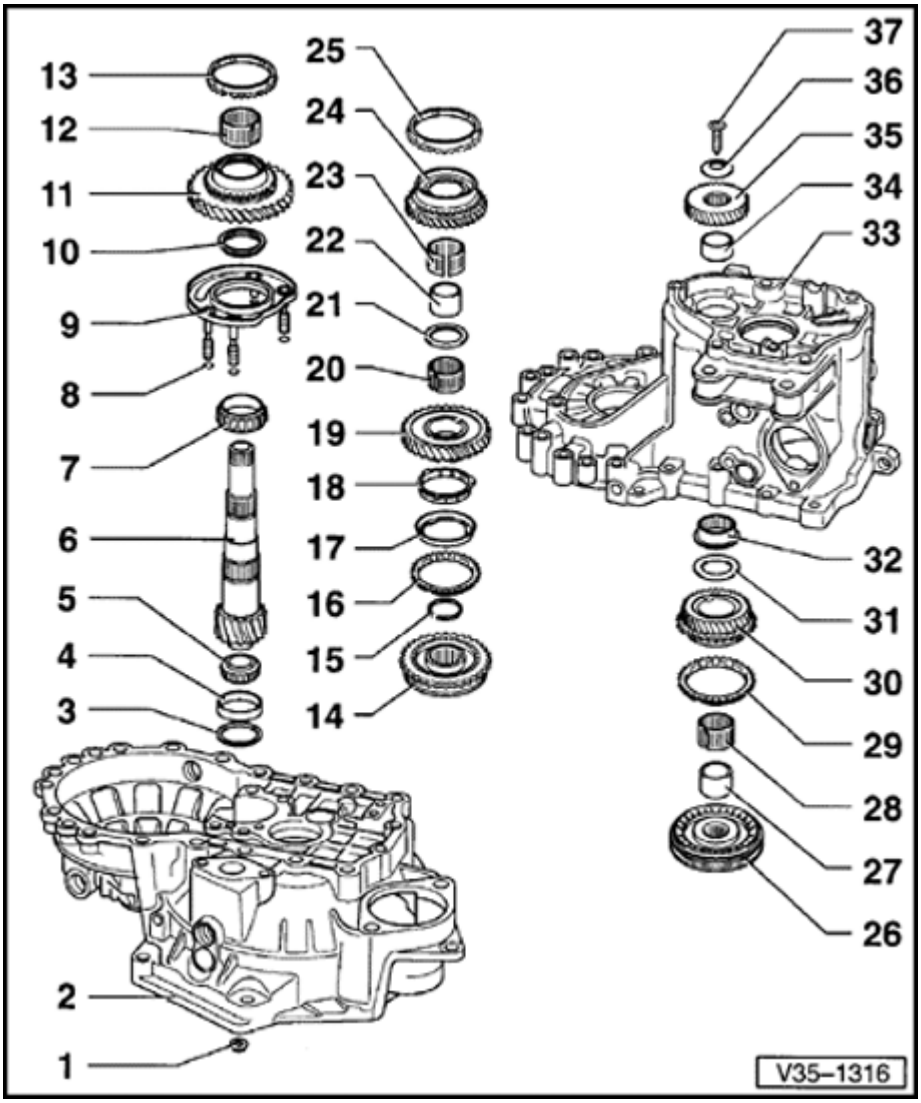

36 - Belleville spring washer

- Installation position ⇒ Page 34-75

37 - Torx socket head bolt

- M10
- Tightening torque: 80 Nm (59 ft lb)

35-29

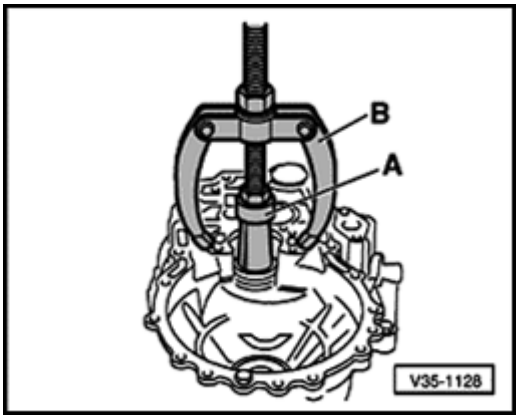

Fig. 1 Pulling off small tapered roller bearing outer race

A - Internal extractor: 37-46 mm

e.g. US 1099 or Kukko 21/6

B - Counter support

e.g. US 1032 or Kukko 22/2

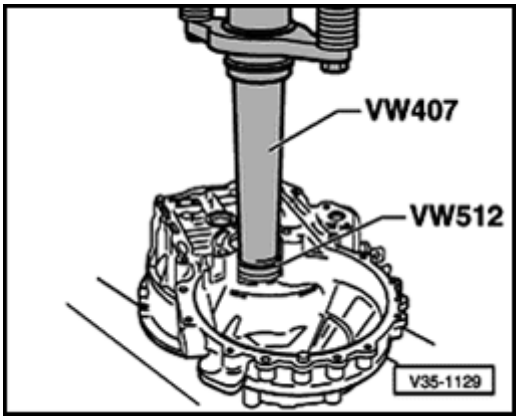

Fig. 2 Pressing in small tapered roller bearing outer race

35-30

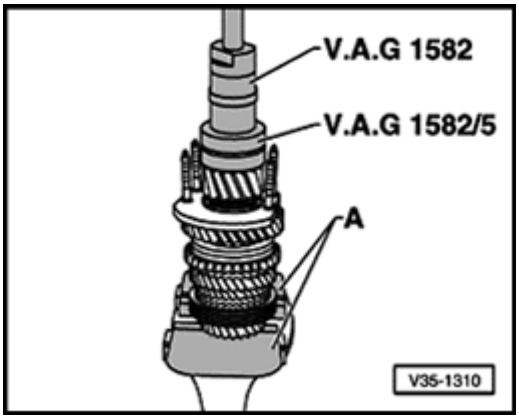

Fig. 3 Pulling off small tapered roller bearing inner race

A - Protective jaws for vise

- Install puller and tighten into position well behind rollers of bearing.
- Turn bearing and re-tighten puller.

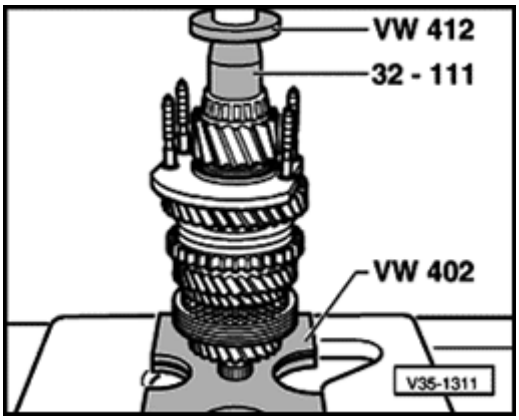

Fig. 4 Pressing on small tapered roller bearing inner race

35-31

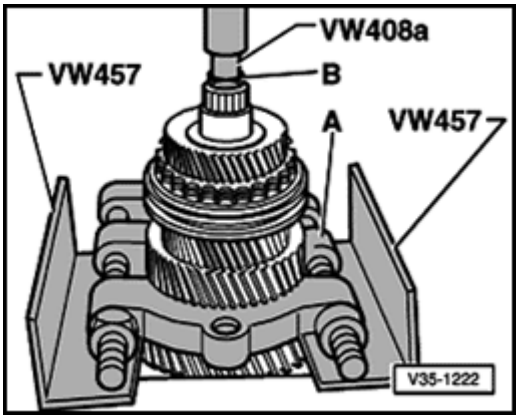

Fig. 5 Pressing off 3rd gear (3GR)/4th gear (4GR) synchro-hub with operating sleeve, 2nd gear, 3rd gear (3GR) and 4th gear (4GR) with transmission housing needle roller bearing sleeve

A - Separator, 22-115 mm

e.g. Kukko 17/2

B - 17 mm hex-head bolt (M10 x 20)

Note:

Support the separator tool so that the 1st/2nd gear operating sleeve stays in position and is NOT pulled off.

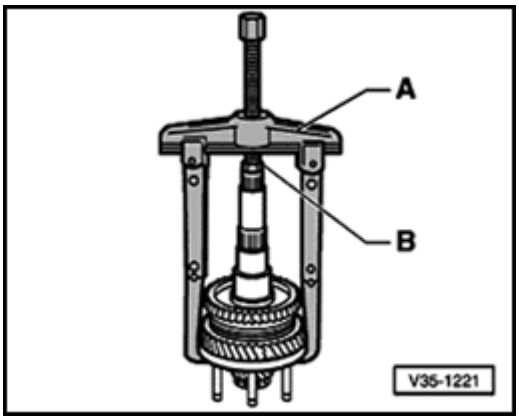

Fig. 6 Pulling off operating sleeve with synchro-hub using bearing support

A - A - Two arm puller, e.g. US 1078 or Kukko 20/10, and hooks with 250mm reach, e.g. US 1079

B - 17 mm hex-head bolt (M10 x 20)

Note:

Remove circlip before pulling off individual components.

35-32

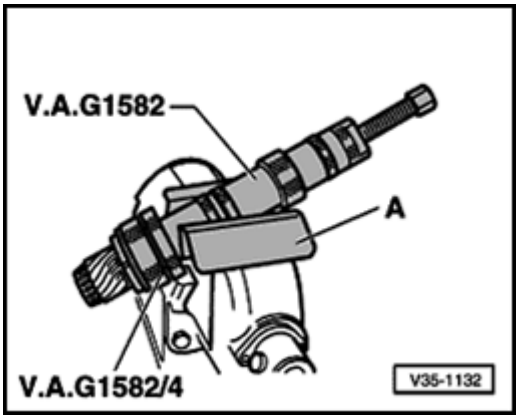

Fig. 7 Pulling off large tapered roller bearing inner race

A - Protective jaws for vise

Note:

Before installing the puller, insert a M10 x 20 hex bolt in threaded hole of the output shaft.

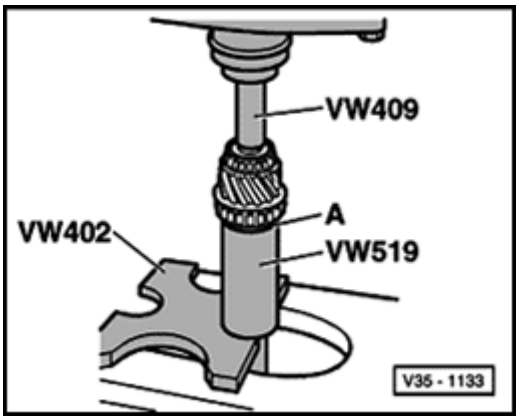

Fig. 8 Pressing on large tapered roller bearing inner race

A - Thrust washer

- Install thrust washer before pressing on inner race.
  - ♦ Shoulder faces inner race

35-33

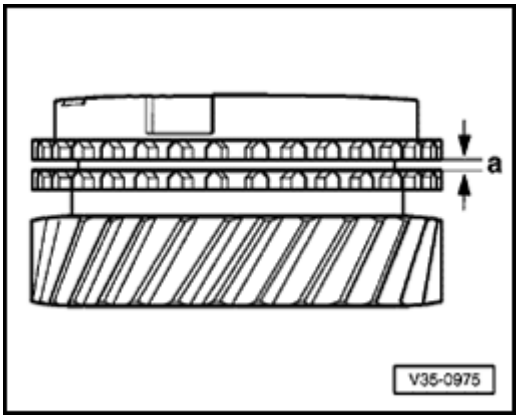

Fig. 9 Checking synchro-ring for wear

- Press synchro-ring onto gear and measure gap -a- with feeler gauge.

	Gap -a-	
Gear	**New**	**Wear limit**
1st gear	1.0-1.7 mm (0.039-0.067 in.)	0.5 mm (0.020 in.)
3rd gear (3GR)		
4th gear (4GR)		

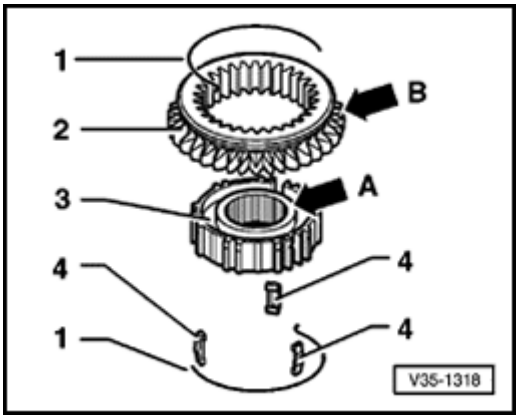

Fig. 10 Disassembling and assembling 1st/2nd gear operating sleeve and synchro-hub

1 - Spring

2 - Operating sleeve

3 - Synchro-hub

4 - Locking piece

- Press operating sleeve over synchro-hub.
  - ♦ After assembly, wider shoulder of synchro-hub (arrow -A-) and outer splines of operating sleeve (arrow -B-) face in opposite directions
  - ♦ Recesses for locking pieces, in synchro-hub and in operating sleeve, must be aligned

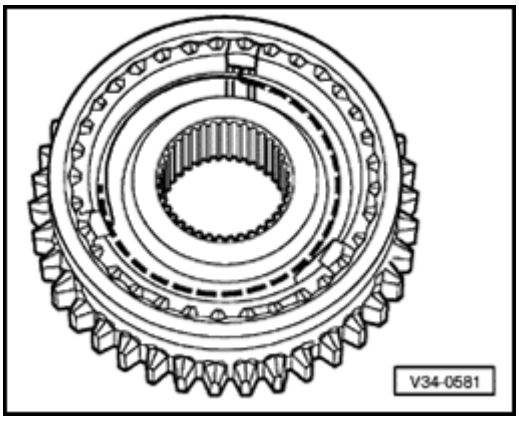

Fig. 11 Assembling 1st/2nd gear operating sleeve and synchro-hub

- Operating sleeve pressed over synchro-hub

- Insert locking pieces and install springs.
  - ♦ Spring ends must be offset by 120°
  - ♦ Bent end of spring must engage in locking piece

35-35

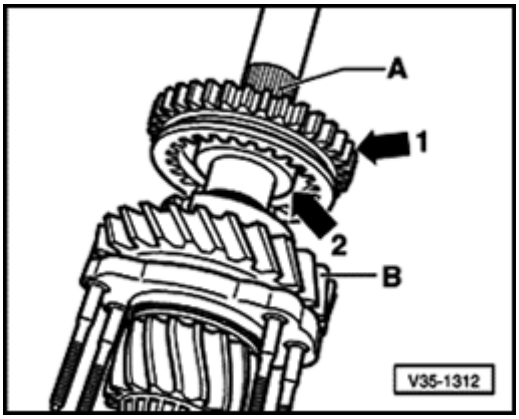

Fig. 12 Installation position of 1st/2nd gear operating sleeve/synchro-hub

- Splines on operating sleeve (arrow -1-) face toward splines for 3rd gear (3GR)/4th gear (4GR) synchro-hub -A-.
- Wide shoulder of synchro-hub (arrow -2-) faces toward 1st gear -B-.

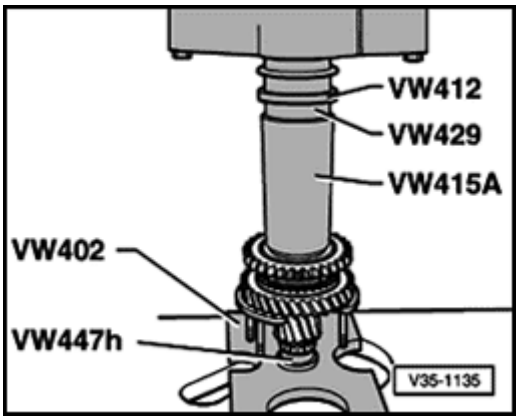

Fig. 13 Pressing on 1st/2nd gear synchro-hub with operating sleeve

Note:

Before pressing on, place 1st gear synchro-ring onto 1st gear.

35-36

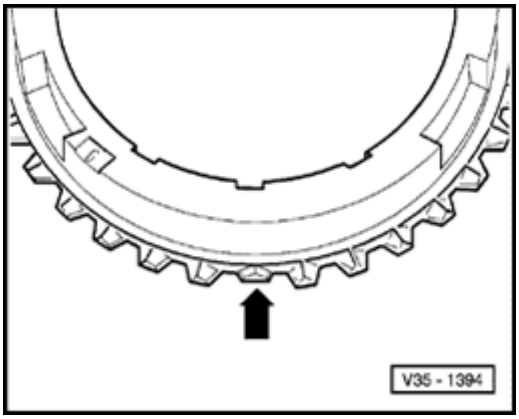

Fig. 14 Identification of 1st and 2nd gear synchro-rings

- 1st gear synchro-ring has 3 ground-down half teeth (-arrow-)
- 2nd gear synchro-ring has 2 or 3 ground-down half teeth (-arrow-)

Only the 2nd gear synchro-ring with 2 ground-down half teeth is available as a spare part.

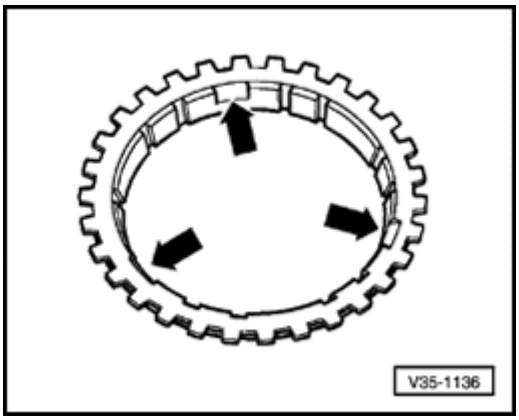

Fig. 15 Identification of 1st and 2nd gear synchro-rings

- 1st gear synchro-ring: no recesses
- 2nd gear synchro-ring: three recesses (-arrows-)

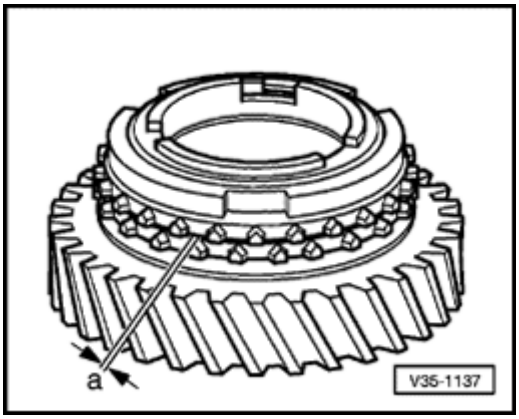

Fig. 16 Checking 2nd gear synchro-ring for wear

- Press synchro-ring, outer ring and inner ring onto cone of 2nd gear.
- Measure gap -a- with feeler gauge.

	Gap -a-	
Gear	**New**	**Wear limit**
2nd gear	1.2-1.8 mm (0.047-0.071 in.)	0.5 mm (0.020 in.)

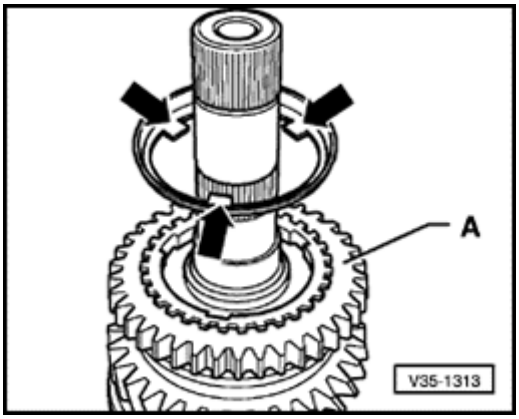

Fig. 17 Installation position for outer ring

- Lugs (-arrows-) face toward 1st gear -A-

35-38

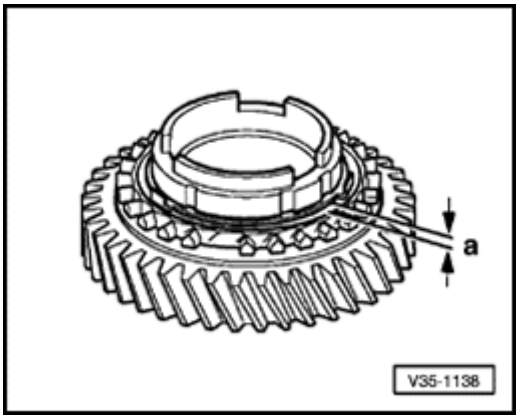

Fig. 18 Checking synchronizer inner ring for wear

- Press inner ring onto cone of 2nd gear.
- Measure gap -a- with feeler gauge.

	Gap -a-	
Gear	**New**	**Wear limit**
2nd gear	0.75-1.25 mm (0.030-0.049 in.)	0.3 mm (0.012 in.)

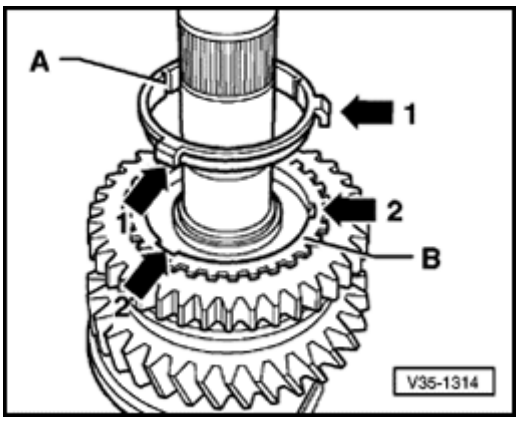

Fig. 19 Installation position for synchronizer inner ring -A-

- Lugs (arrows -1-) engage in recesses (arrows -2-) of synchro-ring -B-

35-39

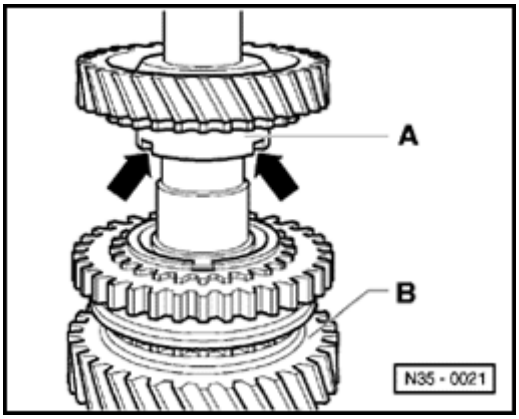

Fig. 20 Installation position for 2nd gear

- High shoulder -A- faces toward 1st gear -B-
- Recesses in shoulder (-arrows-) engage in lugs of outer ring (arrow ⇒ Fig. 17)

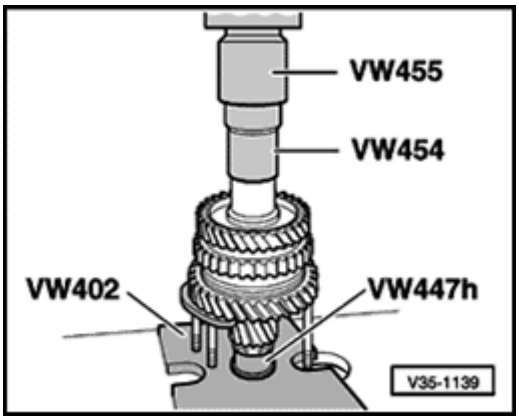

Fig. 21 Pressing on sleeve for 3rd gear (3GR) needle roller bearing

35-40

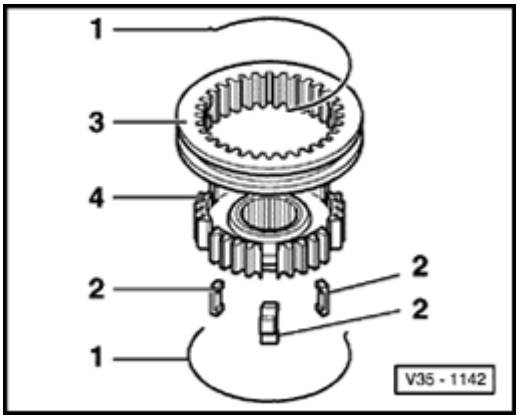

Fig. 22 Disassembling and assembling 3rd gear (3GR) and 4th gear (4GR) operating sleeve and synchro-hub

1 - Spring

2 - Locking piece

3 - Operating sleeve

4 - Synchro-hub

- Slide operating sleeve over synchro-hub.

♦ Recesses for locking pieces, in synchro-hub and in operating sleeve, must be aligned

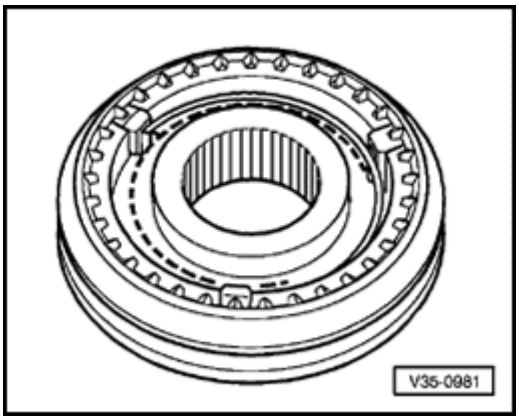

Fig. 23 Assembling 3rd gear (3GR) and 4th gear (4GR) operating sleeve and synchro-hub

• Operating sleeve installed over synchro-hub

- Insert locking pieces and install springs.

  ♦ Spring ends must be offset by 120°

  ♦ Bent end of spring must engage in locking piece

35-41

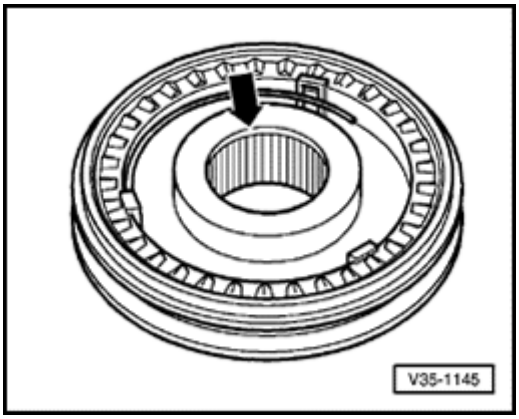

Fig. 24 Installation position of 3rd gear (3GR)/4th gear (4GR) operating sleeve/synchro-hub

- Chamfer (-arrow-) faces toward 4th gear (4GR)

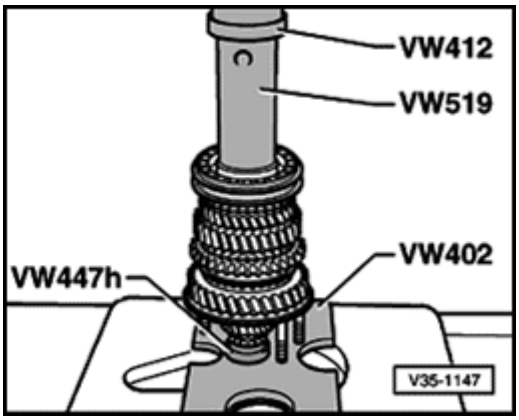

Fig. 25 Pressing on 3rd gear (3GR)/4th gear (4GR) synchro-hub with operating sleeve

35-42

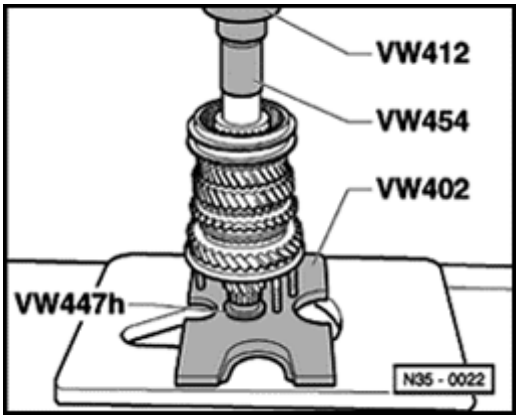

Fig. 26 Pressing on sleeve for 4th gear (4GR) needle roller bearing

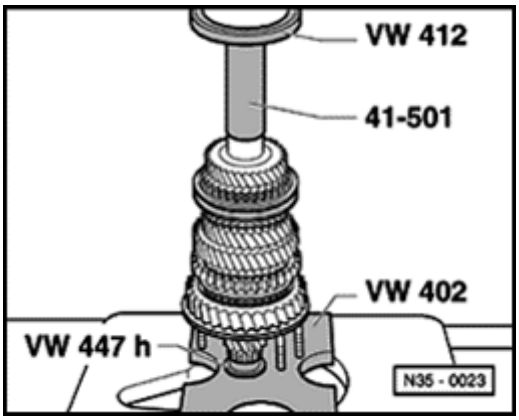

Fig. 27 Pressing on sleeve for output shaft needle roller bearing

Output shaft, adjusting

(Determining thickness of output shaft shim)

It is necessary to re-adjust the input shaft when any of the following is replaced:

- Final drive
- Clutch housing
- Taper roller bearing

Adjustment overview ⇒ Page 39-24

- Press outer race for small tapered roller bearing along with 0.65 mm adjustment shim fully into clutch housing ⇒ Page 35-29 .
- Install output shaft and tighten bearing support.
  - Tightening torque: 25 Nm (18 ft lb) plus additional 90° ($^1/_4$ -turn)

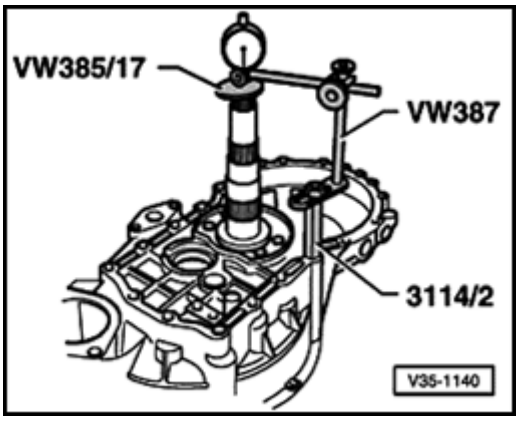

- Install dial indicator (3 mm measuring range).
- Adjust dial indicator to zero with 1 mm preload.

- Move output shaft up and down.

- Read and record play measured by dial indicator.

  - Example: 0.30 mm

CAUTION!

Do not rotate the output shaft while measuring play as this will cause the bearings to settle, resulting in an inaccurate measurement.

Adjustment shim thickness, determining

The correct shim thickness is selected by adding:

- specified bearing preload (a constant, 0.20 mm)

- the measured play (example: 0.30 mm)

- test shim thickness (0.65 mm)

Example:

Inserted test shim	0.65 mm
+ Reading from dial indicator	0.30 mm
+ Preload (constant)	0.20 mm
Shim thickness required	1.15 mm

- Remove output shaft and pull out small tapered roller bearing outer race ⇒ Page 35-29

The following adjustment shims are available:

Thickness mm	Replacement part number
0.65	020 311 391 P
0.70	020 311 391 Q
0.75	020 311 391
0.80	020 311 391 A
0.85	020 311 391 B
0.90	020 311 391 C
0.95	020 311 391 D
1.00	020 311 391 E
1.05	020 311 391 F
1.10	020 311 391 G
1.15	020 311 391 H
1.20	020 311 391 J
1.25	020 311 391 K
1.30	020 311 391 L
1.35	020 311 391 M
1.40	020 311 391 N

Note:

Different tolerances make it possible to select the exact shim size required.

- Press in outer race for small input shaft tapered roller bearing along with correct adjustment shim ⇒ Page 35-29 .

  - Example (calculated above): 1.15 mm

- Install output shaft.

- Tighten bearing support mounting nuts in clutch housing.

  - Tightening torque: 25 Nm (18 ft lb) plus additional 90° ($^1/_4$ turn)

Friction moment, checking

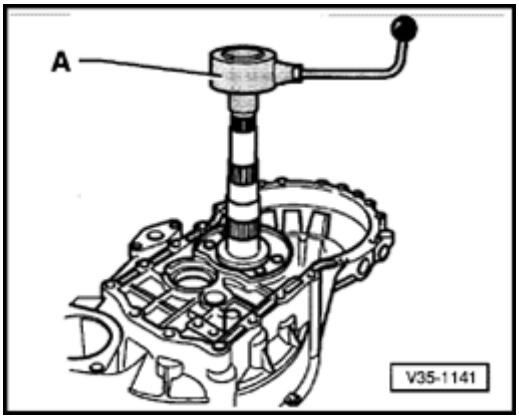

A - Commercial torque gauge, 0-600 Ncm range (0-54 in lb)

- Lubricate bearings with transmission oil before checking friction moment (turning torque)

Specifications:

  - New bearings: 130-180 Ncm (12-16 in lb)
  - Used bearings: At least 30 Ncm (2.7 in lb)

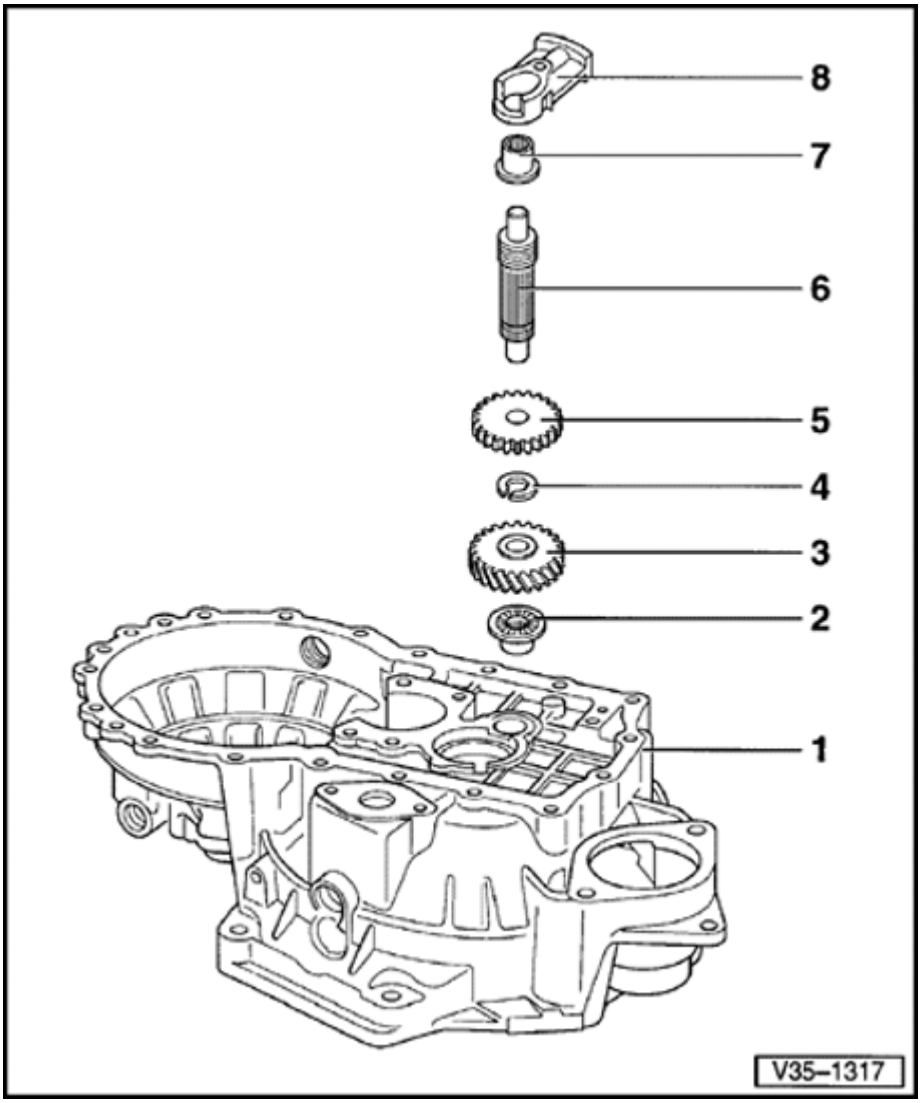

Reverse idler shaft, disassembling and assembling

Note:

After disassembly, always replace needle roller bearings in clutch housing and reverse idler shaft support.

1 - Clutch housing

2 - Needle roller bearing

- Pulling out ⇒ Fig. 1
- Pressing in ⇒ Fig. 2

3 - Reverse gear

4 - Circlip

- If removed, always replace

35-48

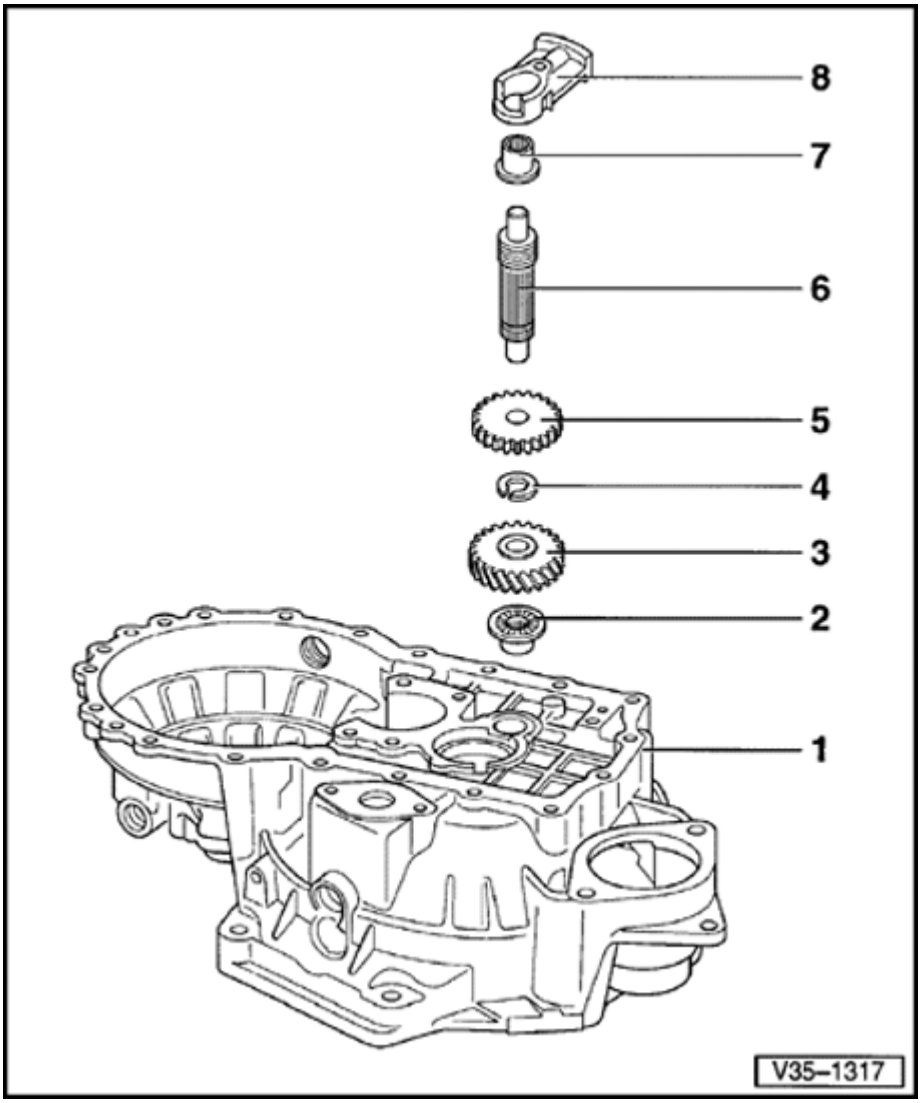

5 - Reverse sliding gear

- Before replacing gear, remove circlip
- Shoulder faces toward reverse gear - 3 -

6 - Reverse idler shaft

- Removing ⇒ Page 34-60

7 - Needle roller bearing

- Pressing out ⇒ Fig. 3
- Pressing in ⇒ Fig. 4

8 - Reverse idler shaft support

- Removing and installing ⇒ Page 34-60

35-49

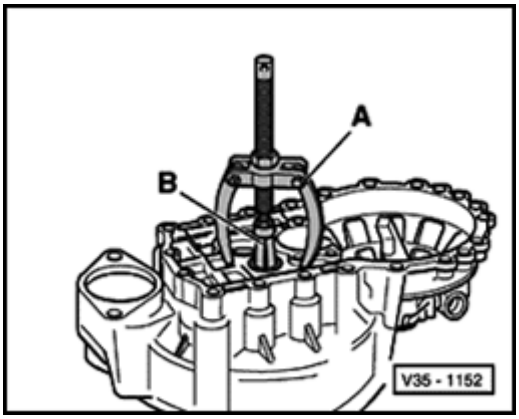

Fig. 1 Pulling needle roller bearing from clutch housing

A - Counter support

e.g. Kukko 22/1

B - Internal extractor 14.5-18.5 mm

e.g. US 8028 or Kukko 21/2

Note:

Bearing is destroyed during removal and must be replaced.

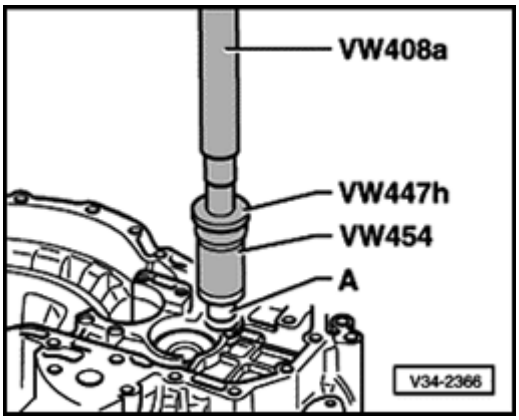

Fig. 2 Pressing needle roller bearing into clutch housing

A - Needle roller bearing

35-50

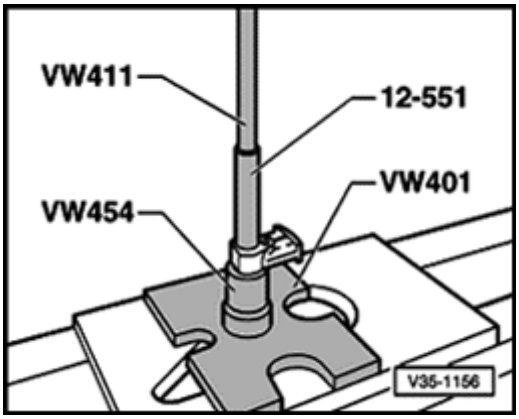

Fig. 3 Pressing needle roller bearing out of reverse idler shaft support

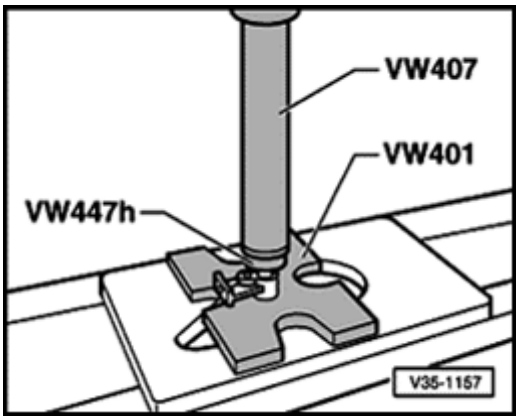

Fig. 4 Pressing needle roller bearing into reverse idler shaft support

Axle flange oil seal, replacing

Transmissions without springs behind axle flanges

Notes:

- *Also refer to general repair instructions ⇒ Page 00-10 .*
- *Replacing seals on transmissions with springs behind axle flanges ⇒ Page 39-4 .*

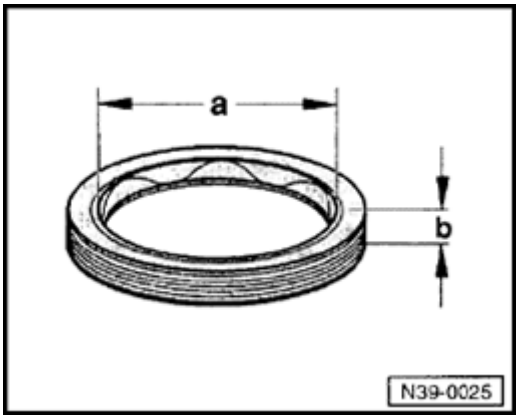

Seal dimensions

- Diameter -a- = 40.0 mm (1.575 in.)
- Height -b- = 10.0 mm (0.394 in.)

Removing

Before replacing left-side oil seal:

- Remove axle shaft ⇒ *Repair Manual, Suspension, Wheels, Brakes, Steering, Repair Group 40*

Before replacing right-side oil seal:

- Turn steering completely to right (full-lock).
- Remove axle shaft protective cover from engine.
- Disconnect right-side axle shaft from axle flange.
- Tie axle shaft up out of the way as far as possible.

39-2

CAUTION!

DO NOT damage surface finish of axle shaft.

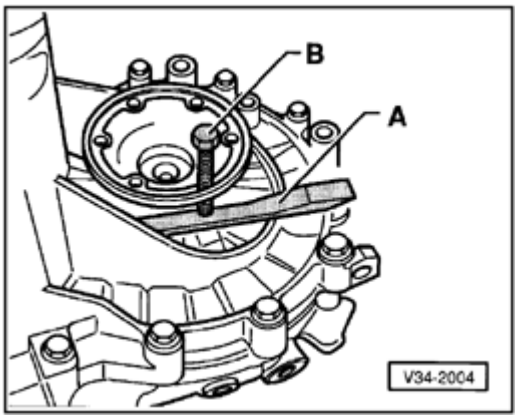

- Remove axle flange
  - Place chisel or spacer -A- beneath axle flange and pull flange from differential gears by turning bolt -B-

Note:

If the axle flange shaft fails to come out straight, use two spacers -A-, and bolts -B- , positioned opposite each other. Tighten both bolts alternately and evenly.

CAUTION!

Always replace axle flange circlip.

Replace circlip for axle flange, as follows:

- Clamp axle flange shaft in vise (fitted with protective jaws)

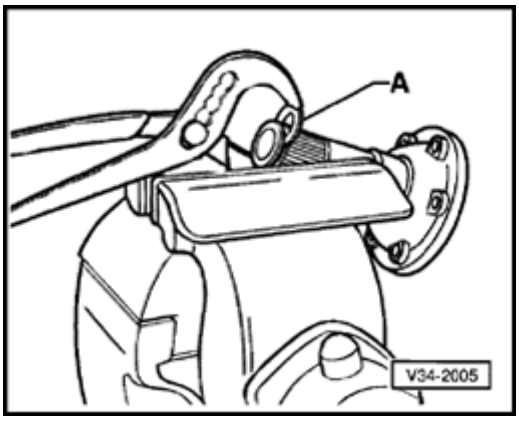

- Use new circlip -A- to press old circlip out of groove in flange shaft.
- Clamp axle flange in vise with protective jaws.
- Pull out axle flange oil seal using VW 681 extractor lever.

39-3

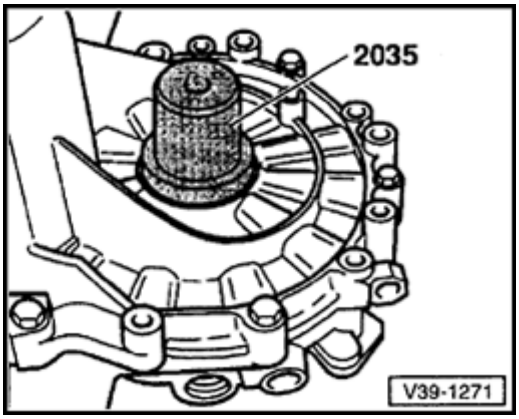

Installing

- Drive in new axle flange oil seal until flush.
- Fill space between sealing lip and dust seal with multi-purpose grease.
- Drive in axle flange using VW 295 drift.
- Install left-side axle shaft, or re-connect right-side axle shaft.
- Install axle shaft protective cover (right-side) if necessary.
- Check transmission oil, if necessary top off to lower edge of filler opening ⇒ Repair Group 00.

Tightening torques

Axle shaft to axle flange	45 Nm (33 ft lb)
Axle shaft protective cover to engine (right side)	35 Nm (26 ft lb)
Wheel to wheel hub	110 Nm (81 ft lb)

39-4

Transmissions with springs behind axle flanges

Notes:

- *Also refer to general repair instructions ⇒ Page 00-10 .*

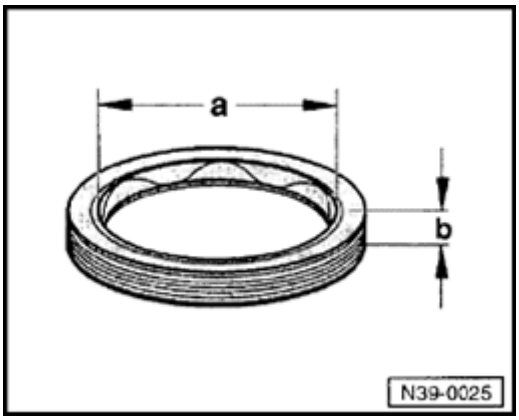

Seal dimensions

- Diameter -a- = 48.0 mm (1.890 in.)
- Height -b- = 6.8 mm (0.268 in.)

Removing

Before replacing left-side oil seal:

- Remove axle shaft ⇒ *Repair Manual, Suspension, Wheels, Brakes, Steering, Repair Group 40* ; removing and installing drive shaft

Before replacing right-side oil seal:

- Turn steering completely to right (full-lock).
- Remove axle shaft protective cover from engine.
- Disconnect right-side axle shaft from axle flange.
- Tie axle shaft up out of the way as far as possible.

CAUTION!

DO NOT damage surface finish of axle shaft.

39-5

- Place oil drain pan below axle flange

- Remove axle flange shaft cone-head bolt using 6 mm socket; counterhold with drift.

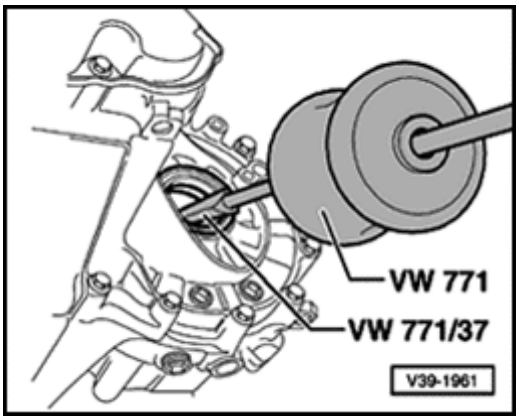

- Remove seal.

CAUTION!

- ***DO NOT damage sleeve, otherwise leaks will occur.***
- ***Replace sleeve if damaged*** ⇒ ***Page 34-*** .

Installing

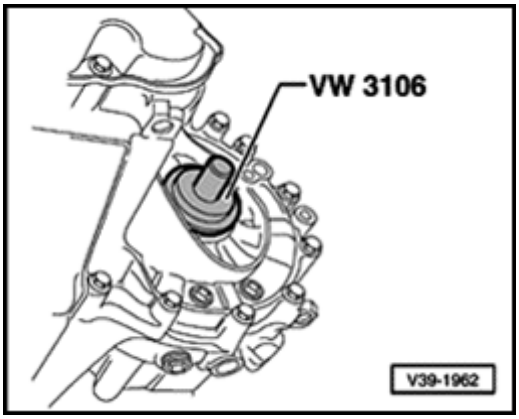

- Drive new axle flange seal in up to stop.
- Fill space between sealing lip and dust seal with multi-purpose grease.
- Install axle flange, and install cone-head bolt into threaded part of flange shaft.
- Install left-side axle shaft, or re-connect right-side axle shaft.
- Install axle shaft protective cover (right-side) if necessary.

- Check transmission oil, if necessary top off to lower edge of filler opening ⇒ Repair Group 00.

Tightening torques

Axle flange to transmission	
(cone-head bolt)	25 Nm (18 ft lb)
Axle shaft to axle flange	45 Nm (33 ft lb)
Axle shaft protective cover to engine (right side)	35 Nm (26 ft lb)
Wheel to wheel hub	110 Nm (81 ft lb)

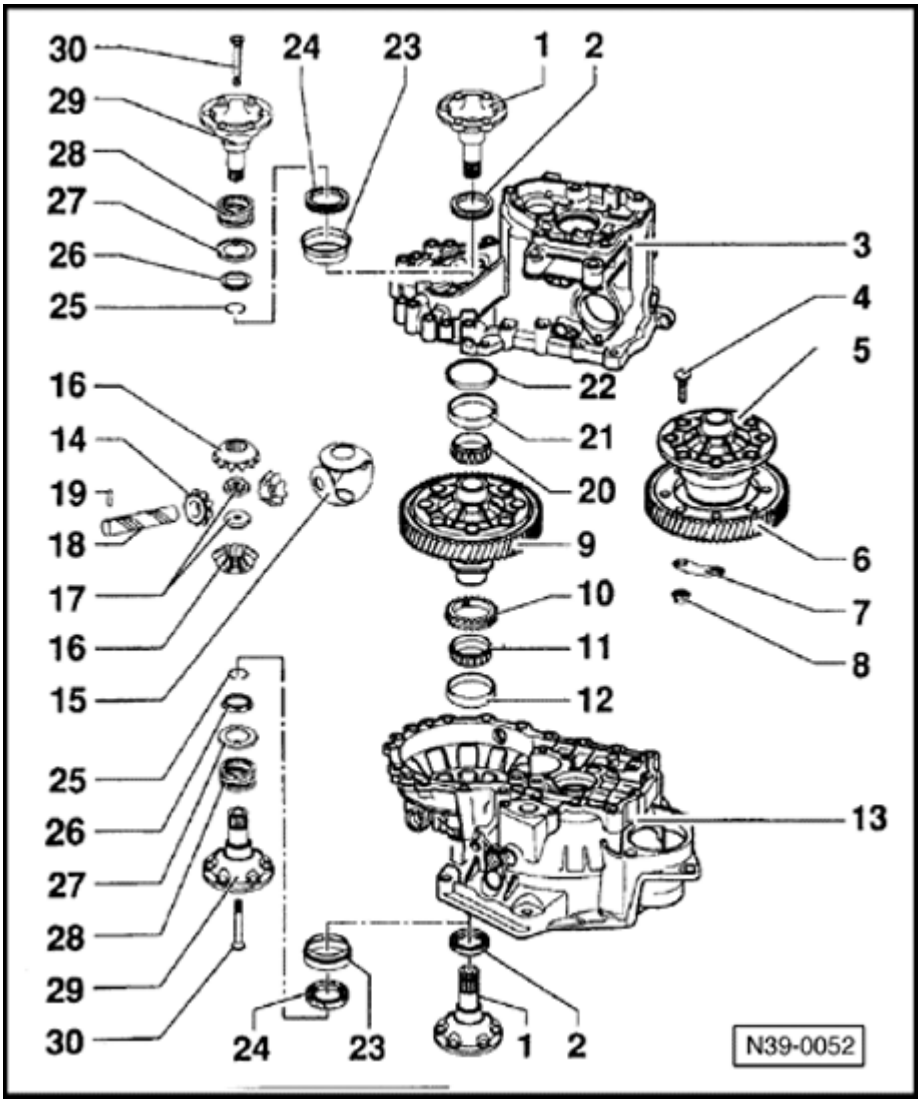

Differential, assembly

Notes:

- *Heat taper roller bearing inner race to 100 ° C before installing.*
- *Always replace both tapered roller bearings together, as a set.*
- *When replacing the differential housing, transmission housing, or tapered roller bearings, also adjust the differential* ⇒ *Page 39-25* .

1 - Flange shaft

- For transmissions without springs behind axle flanges
- Removing and installing ⇒ Page 39-1

2 - Oil seal

- For transmissions without springs behind axle flanges
- Replacing ⇒ Page 39-1

39-8

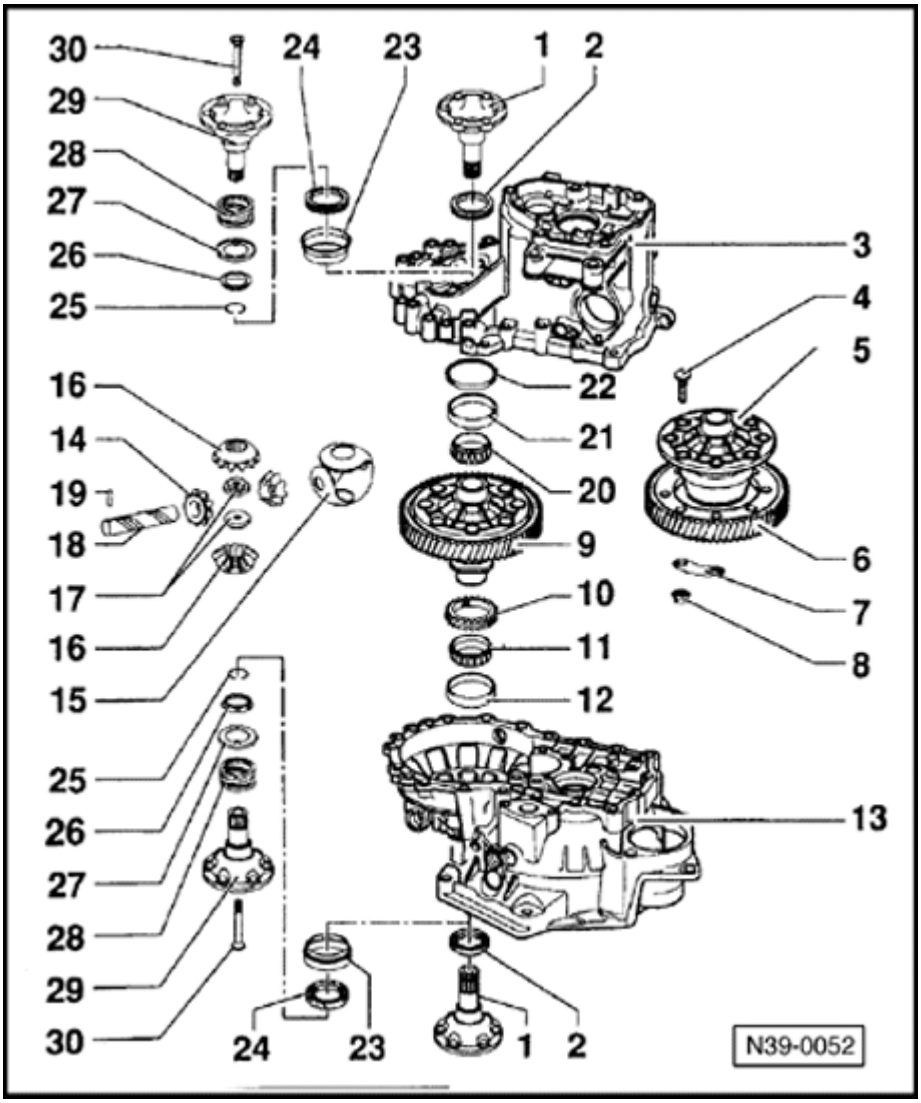

3 - Transmission housing

4 - Bolt

5 - Differential housing

- Bolt to final drive gear
- On transmissions with springs behind axle flanges, both sides are chamfered to accept tapered ring - 26 - ⇒ Fig. 7

6 - Final drive gear

- Riveted on in production, replacement bolted on
- Pressing off ⇒ Fig. 9
- Heat to 100 °C (212 °F) for installation on differential housing ⇒ Fig. 10
- Bolting on ⇒ Fig. 11
- Paired with pinion (output shaft); only replace as set

7 - Packing plate

8 - Nut

- Tightening torque: 70 Nm (52 ft lb)

39-9

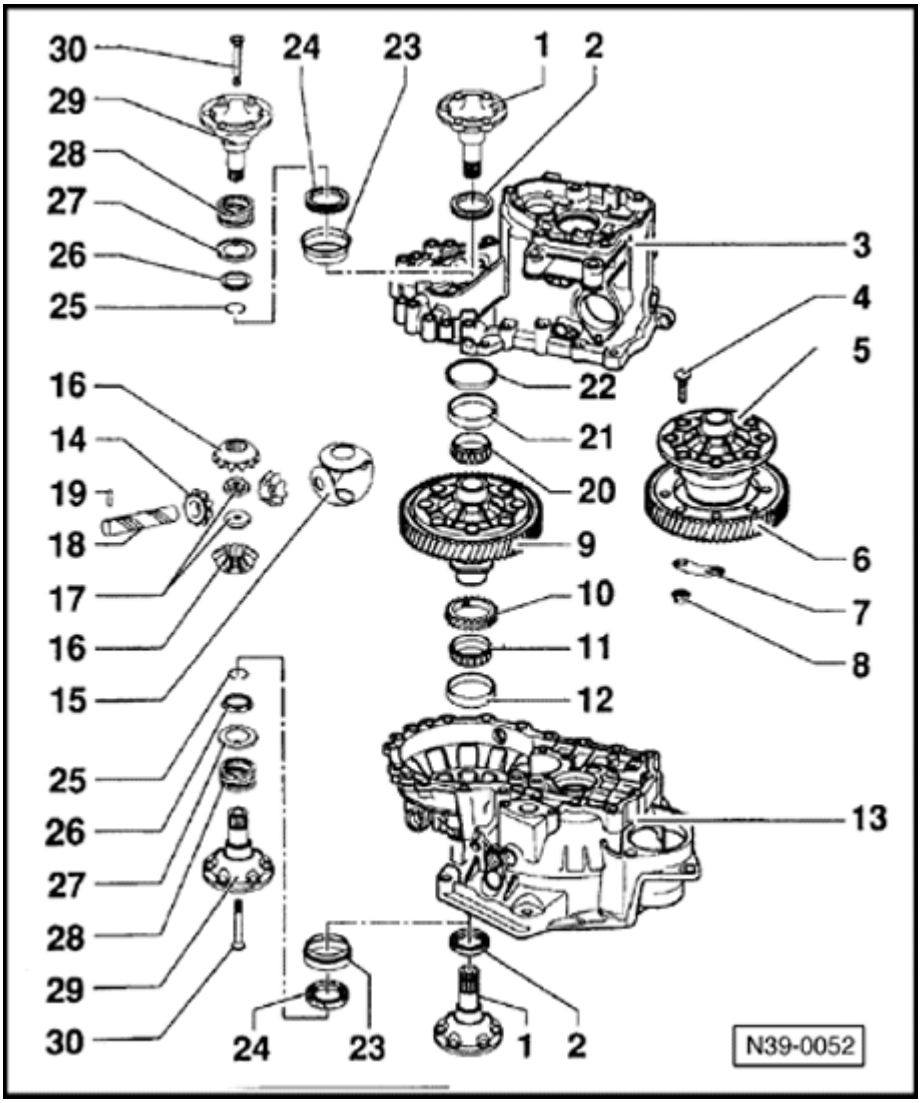

9 - Differential housing

- With final drive gear (riveted on in production)
- Replacing final drive gear: drill out rivet heads ⇒ Fig. 8
- Attaching replacement final drive gear with bolts ⇒ Fig. 11

10 - Speedometer drive gear

- Install in differential housing before pressing in tapered roller bearing inner race

11 - Tapered roller bearing inner race

- Pulling off ⇒ Fig. 3
- Pressing on ⇒ Fig. 4

12 - Tapered roller bearing outer race

- Removing ⇒ Fig. 1
- Pressing in ⇒ Fig. 2

13 - Clutch housing

39-10

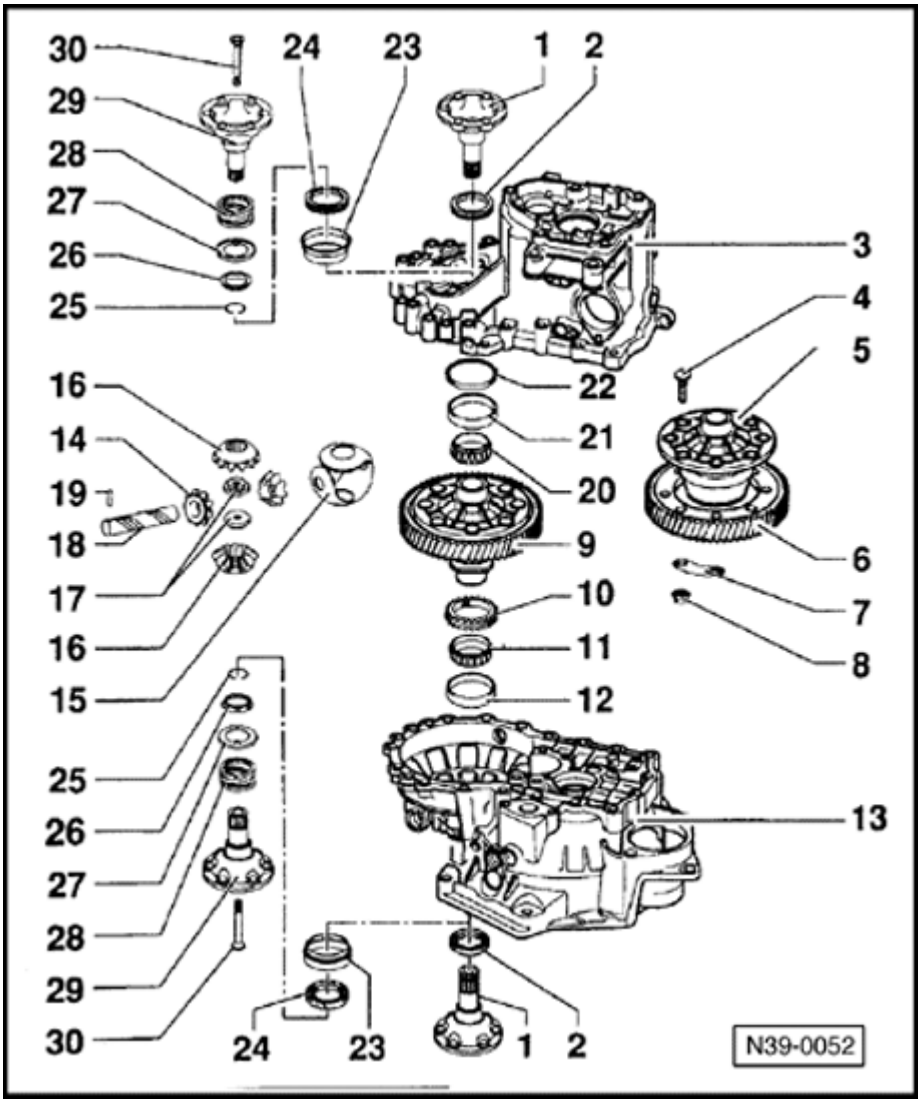

14 - Differential pinion gear

- Installing in transmissions without springs behind axle flanges ⇒ Fig. 14
- Installing in transmissions with springs behind axle flanges ⇒ Fig. 15

15 - One-piece thrust washer

- Lubricate with transmission oil before installing

16 - Differential side gear

- Identifying ⇒ Fig. 13
- Installing in transmissions without springs behind axle flanges ⇒ Fig. 14
- Installing in transmissions with springs behind axle flanges ⇒ Fig. 15

39-11

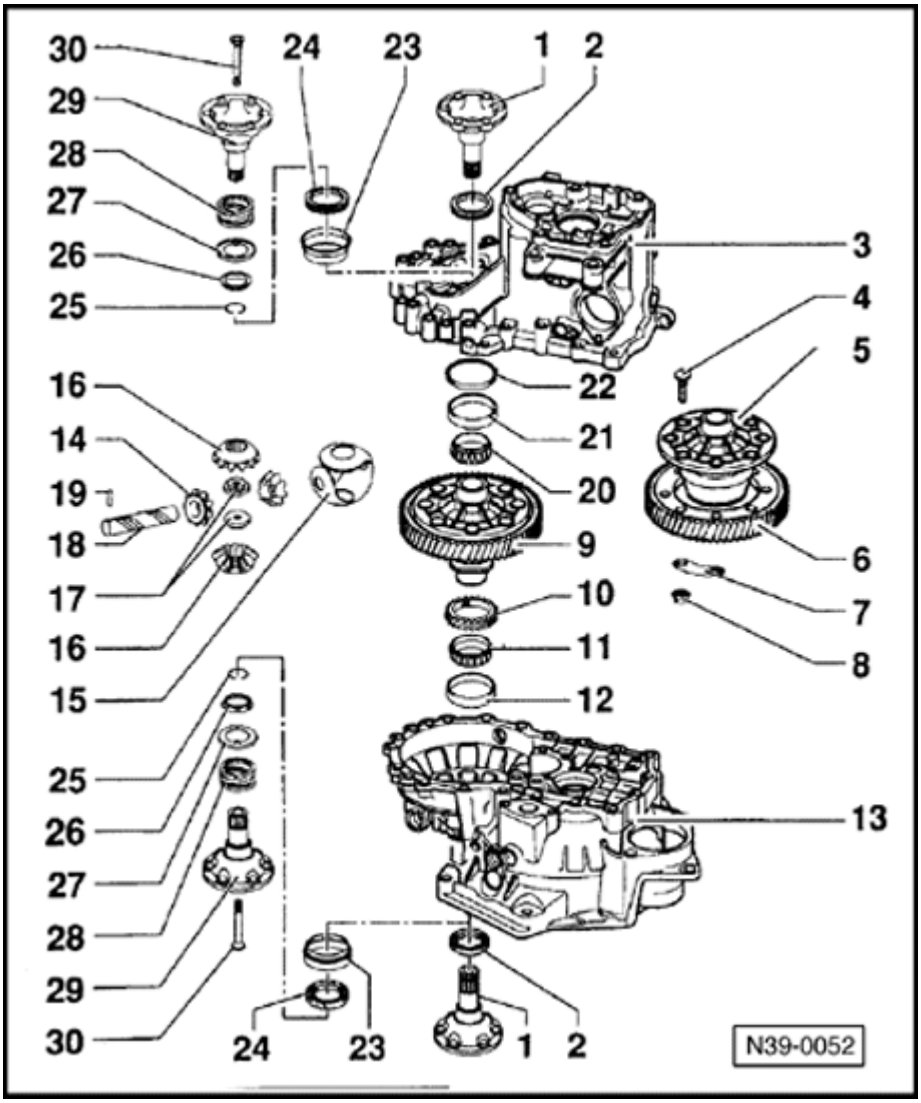

17 - Threaded piece

- Installed in conjunction with springs behind axle flanges ⇒ Fig. 15

18 - Differential pinion shaft

- Drive out using drift
- Installing in transmissions without springs behind axle flanges ⇒ Fig. 14
- Installing in transmissions with springs behind axle flanges ⇒ Fig. 15

19 - Spring pin

- For securing planet pinion axis shaft
- Removing and installing ⇒ Fig. 12

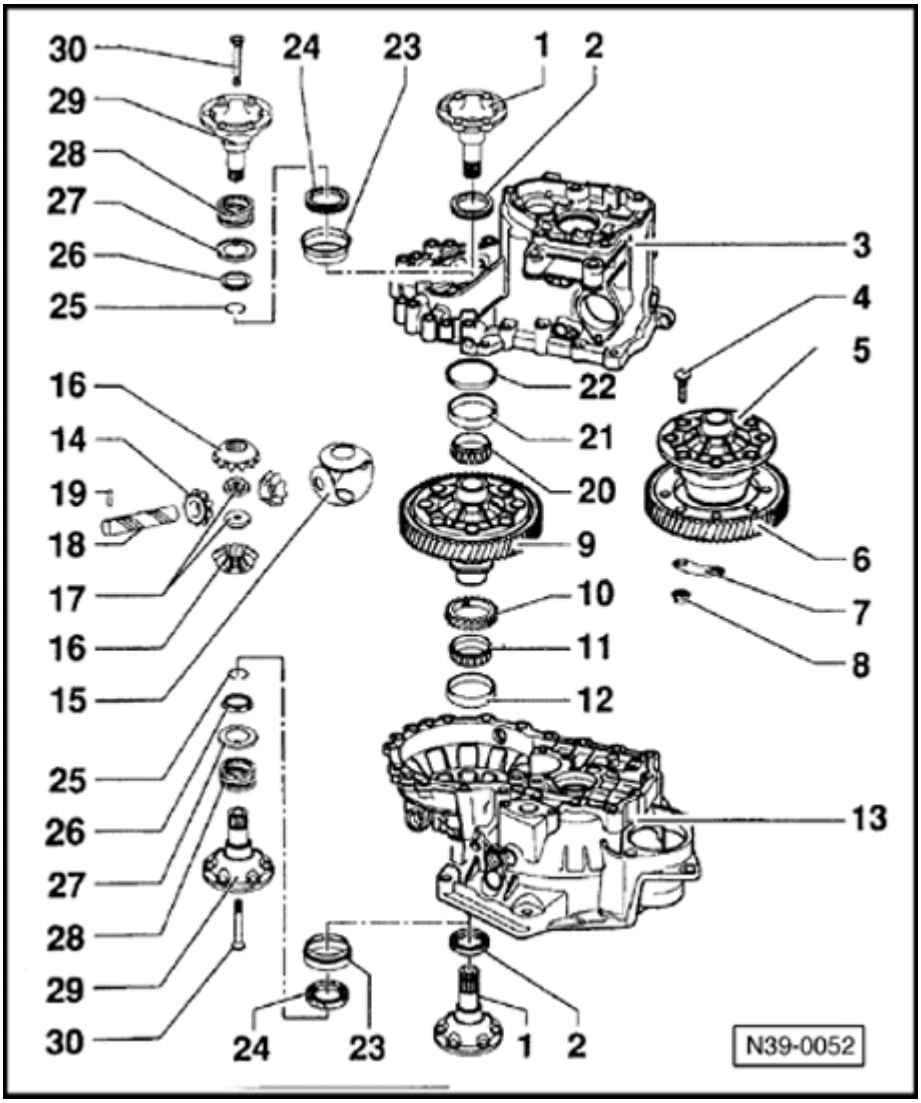

20 - Tapered roller bearing inner race

- Pulling off ⇒ Fig. 3
- Pressing on ⇒ Fig. 4

21 - Tapered roller bearing outer race

- Removing ⇒ Fig. 5
- Pressing in ⇒ Fig. 6

22 - Shim

- For adjusting differential
- Determining thickness ⇒ Page 39-25

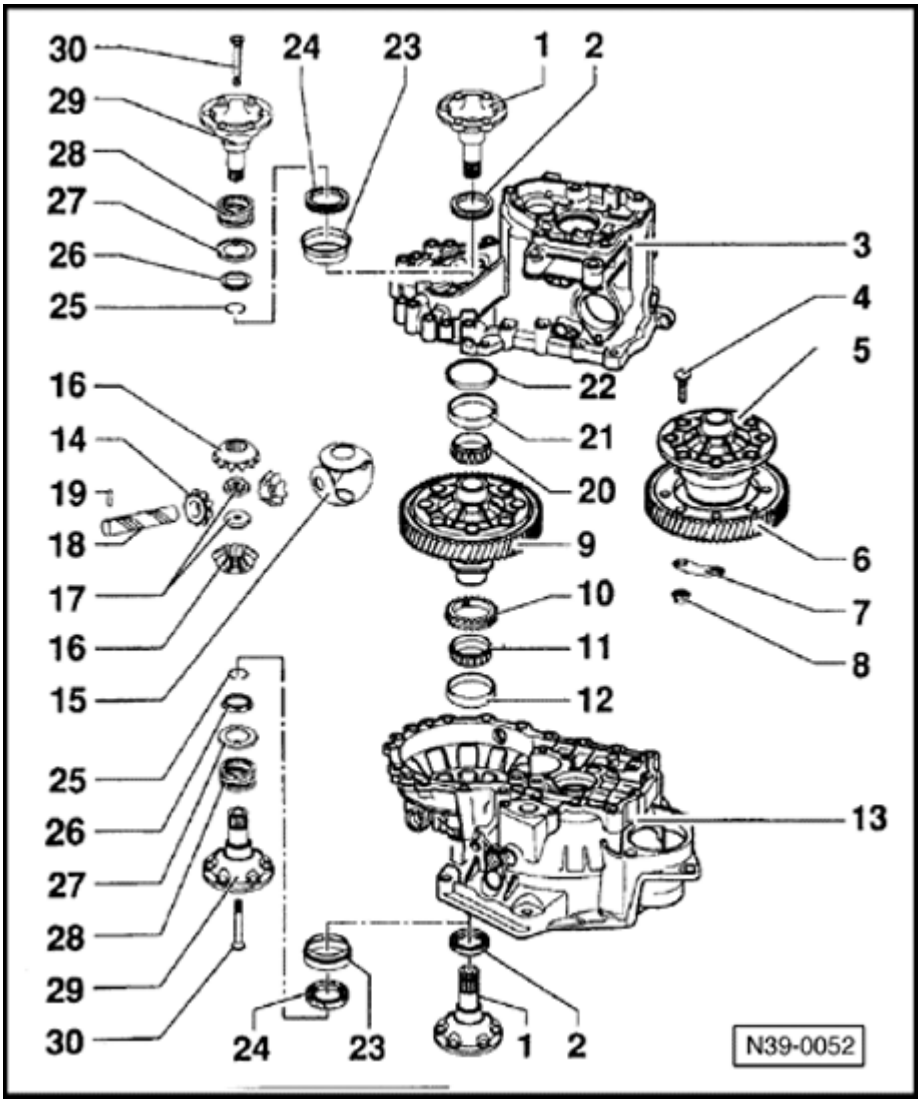

23 - Sleeve

- Installed in conjunction with springs behind axle flanges
- To accept oil seal (item 24)
- Removing and installing ⇒ Page 34-87

24 - Oil seal

- In conjunction with springs behind axle flanges
- Replacing ⇒ Page 39-4

39-14

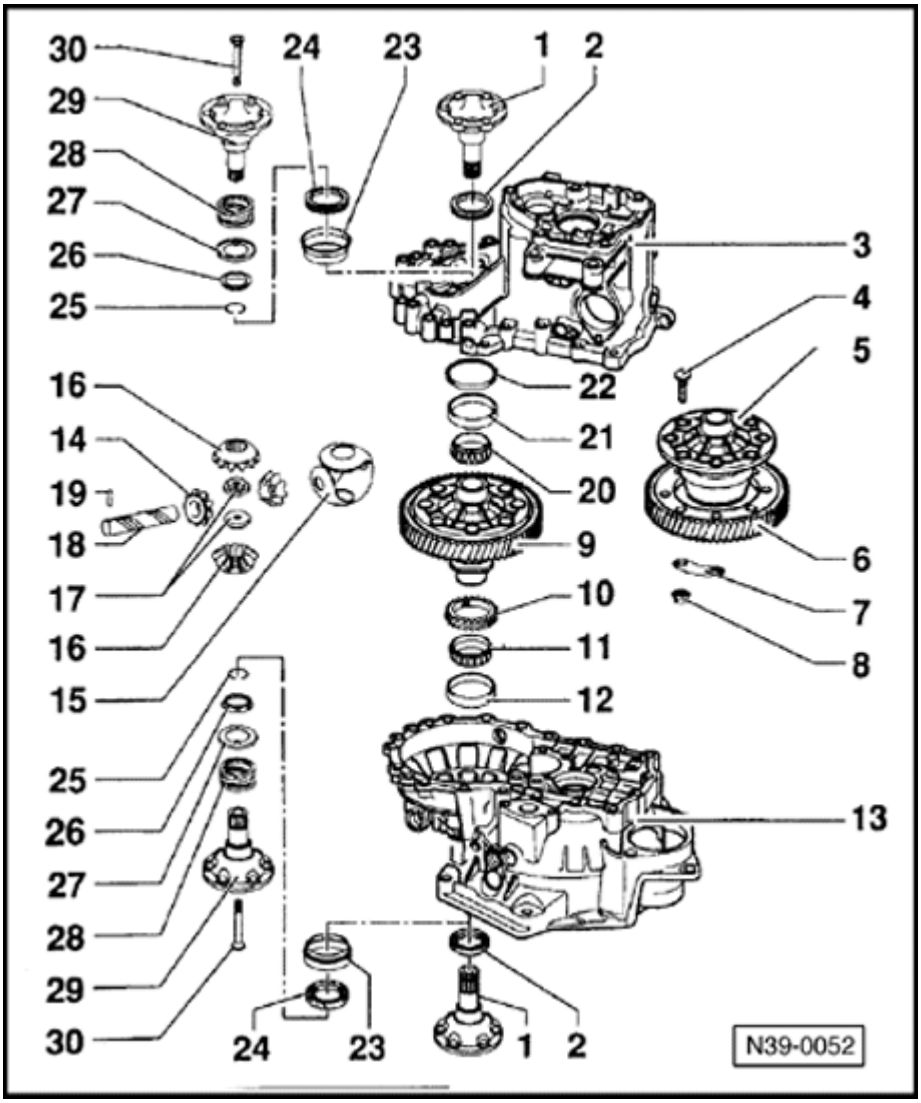

25 - Circlip

- Installed in conjunction with springs behind axle flanges
- Ensures that tapered ring, thrust washer and spring are held in position when axle flange is removed

26 - Tapered ring

- Installed in conjunction with springs behind axle flanges
- With grooves to secure thrust washer
- Installation position: taper toward differential housing

27 - Thrust washer

- Installed in conjunction with springs behind axle flanges
- Installation position: shoulder toward spring, tongue to tapered ring

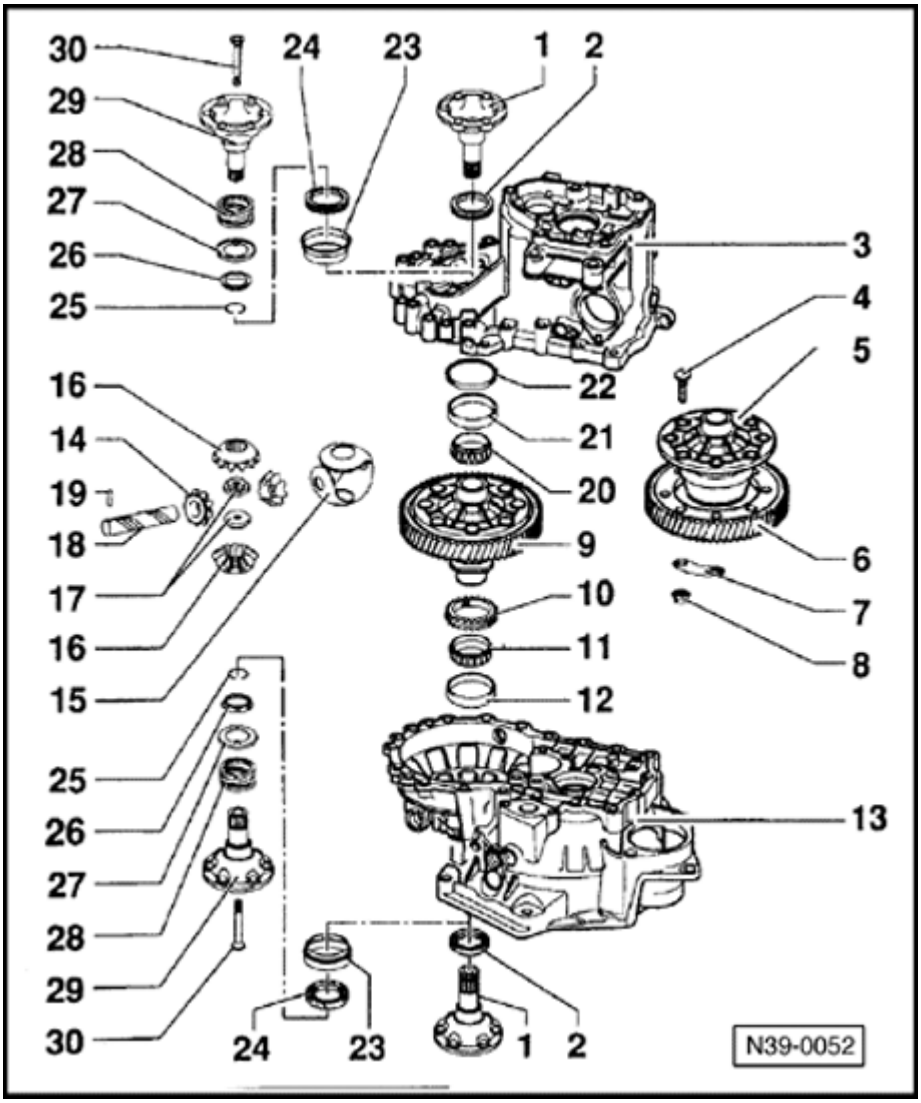

28 - Spring

- Installed behind axle flange
- Applications for transmission with springs behind axle shafts ⇒ Page 00-3

29 - Axle flange

- With drilling for cone-head bolt
- Installed on transmissions with springs behind axle shafts
- Removing and installing ⇒ Page 39-4

30 - Cone-head bolt

- Installed in conjunction with springs behind axle flanges
- Bolt into threaded piece (item 17)

39-16

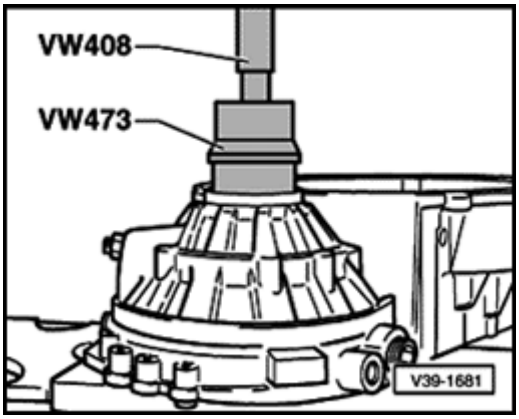

Fig. 1 Driving tapered roller bearing outer race out of clutch housing

- First remove flange shaft seal mounting sleeve on transmissions with springs behind axle flange.

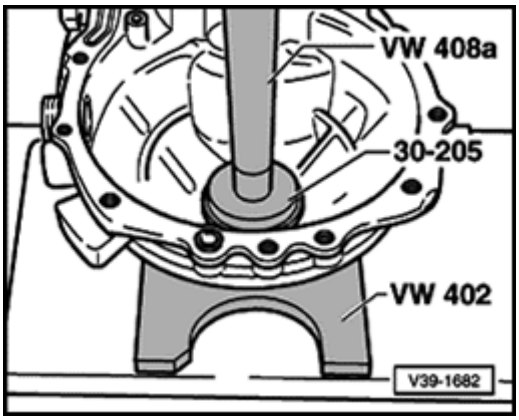

Fig. 2 Pressing tapered roller bearing outer race into clutch housing

No shim is installed in the clutch housing end.

39-17

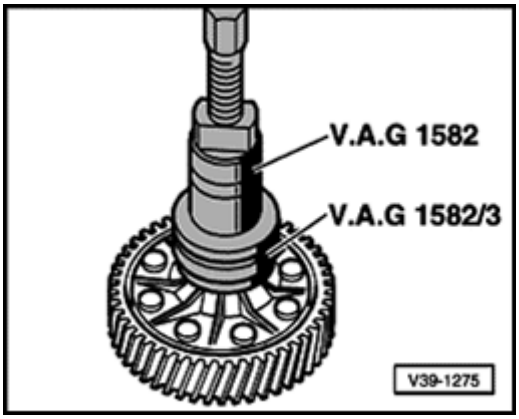

Fig. 3 Pulling off tapered roller bearing inner race

- Before fitting the extractor, position press tool 40-105 on differential housing.

Note:

The set-up and procedure for pulling tapered roller bearing inner races off the differential housing is identical for both bearings.

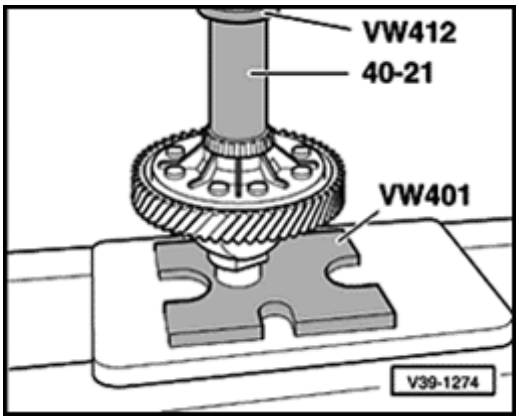

Fig. 4 Pressing on tapered roller bearing inner race

Note:

The tapered roller bearing inner races for transmission housing and clutch housing are pressed on with the same press tools.

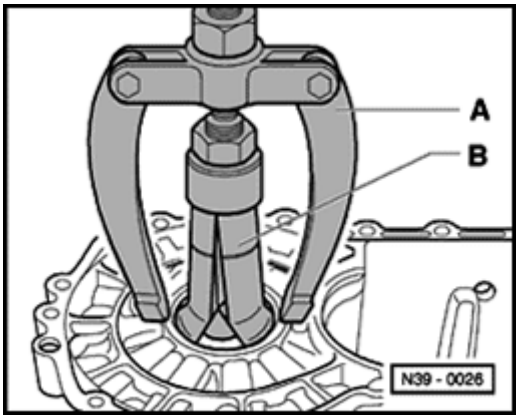

Fig. 5 Pulling tapered roller bearing outer race out of transmission housing

A - Counter support, e.g. Kukko 22/2

B - Internal puller 46-58 mm, e.g. Kukko 21/7

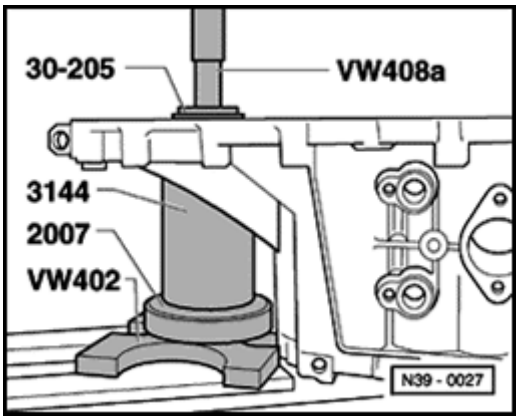

Fig. 6 Pressing tapered roller bearing outer race into transmission housing

- Install shim under outer race.
- Support transmission housing with sleeve 3144 directly below bearing mounting.

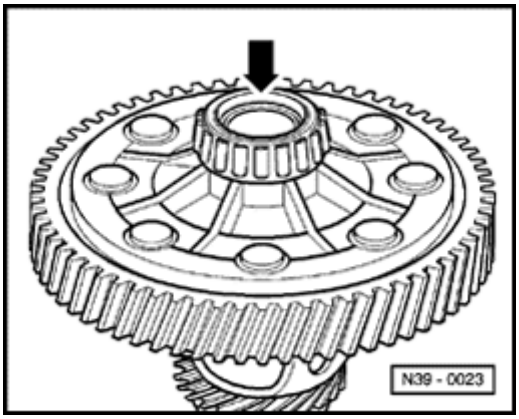

Fig. 7 Both sides of differential housing are chamfered (-arrow-) to accept tapered rings/springs

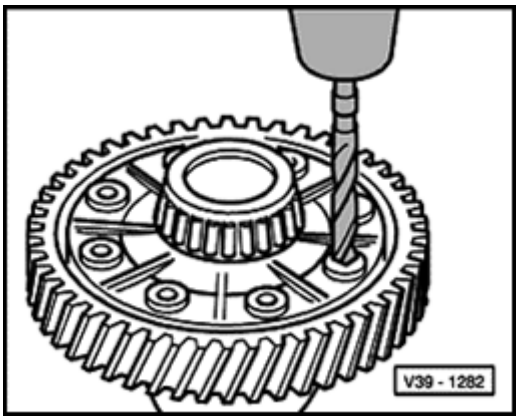

Fig. 8 Drilling out rivet heads

- Drill out rivet heads from countersunk side with 12 mm drill and knock out with drift.

CAUTION!

Clean differential before and after drilling. Cover tapered roller bearings to protect them from metal particles.

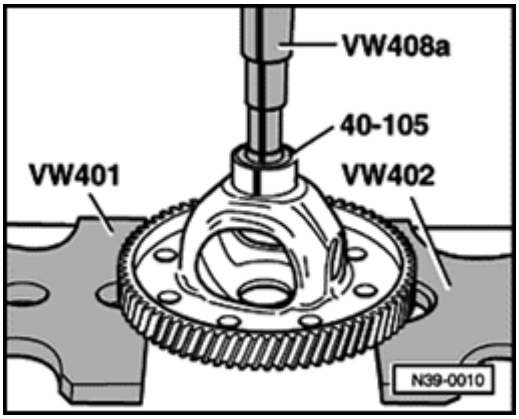

Fig. 9 Pressing off final drive gear

- Place thrust piece 40-105 on differential housing.

Note:

Thrust piece 40-105 can be used with all differential housings.

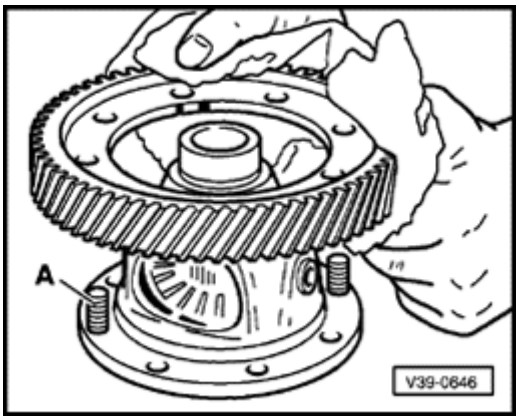

Fig. 10 Heating final drive gear wheel to approx. 100 ° C and installing

- Use bolts -A- from repair kit to guide final drive gear into position during installation.

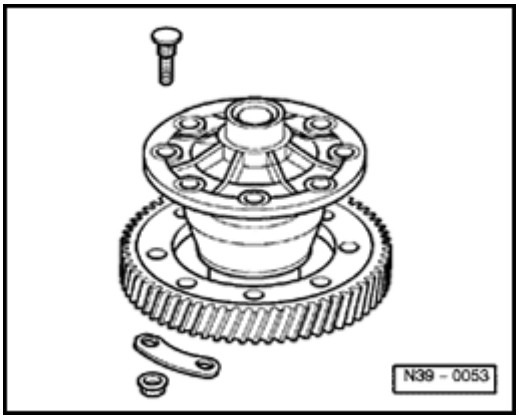

Fig. 11 Bolting together final drive gear and differential housing

Use special bolts Part No. 02A 498 088A with plates and nuts.

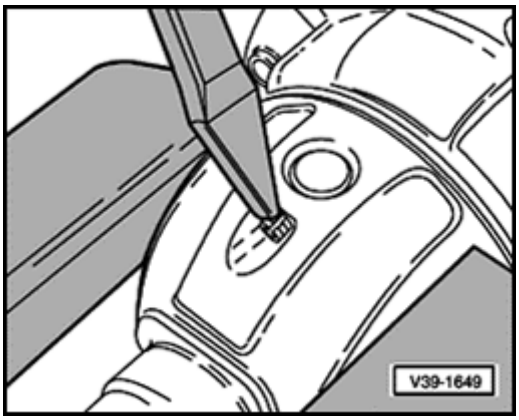

Fig. 12 Removing and installing spring pin for differential pinion shaft

Removing

- Cover tapered roller bearing inner race and speedometer drive gear to avoid possible damage from metal particles.
- Knock-out spring pin with chisel, inserting chisel into circumferential groove.

Installing

- Drive fully into the differential housing.

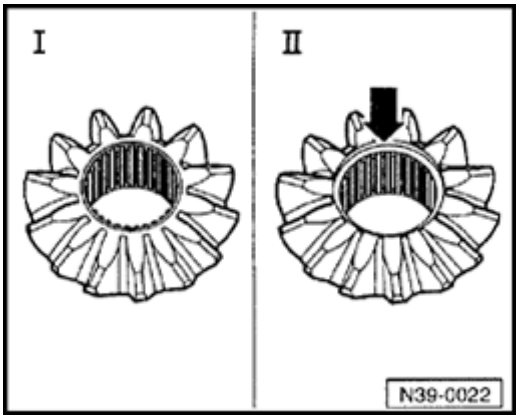

Fig. 13 Identifying differential side gears

Different versions for transmissions with and without springs behind axle flanges.

With springs:	Side gears without recess (I)
Without springs:	Side gears with recess (II)

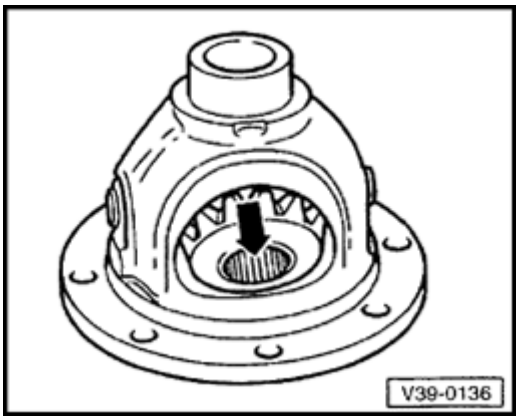

Fig. 14 Installing differential pinion gears and side gears - transmissions without springs behind axle flanges

- Lubricate one-piece thrust washer with transmission oil and install.
- Insert pinion gears and drive in pinion gear shaft.
- Drive in new spring pin ⇒ Fig. 12
- Insert side gears, turned 180°, and pivot into position (-arrow-).

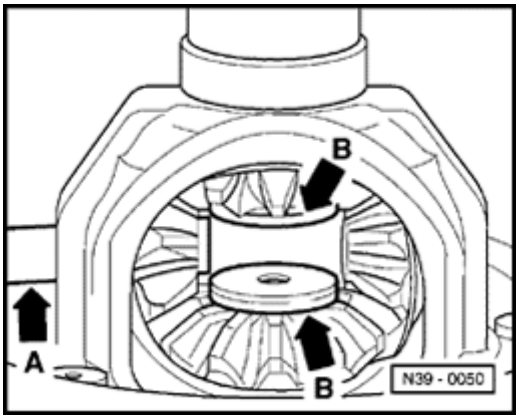

Fig. 15 Installing differential pinion gears and side gears - transmissions with springs behind axle flanges

- Lubricate one-piece thrust washer with transmission oil and install.
- Install both side gears and secure (e.g. with axle flange).
- Install pinion gears, turned 180°, and pivot into position.
- Push in pinion gear shaft (arrow -A-) as far as first pinion gear.
- Position threaded piece (arrow -B-) in side gears.

♦ Installation position: step toward sun wheel

- Drive pinion gear shaft into final position and secure with spring pin.

Adjustment overview

Note:

If repairs have been carried out to the transmission it is only necessary to adjust the input shaft, output shaft or differential if components have been replaced that have a direct effect on the adjustment of the transmission. Refer to the following table to aviod unnecessary adjustments.

		to be adjusted:		
		Input shaft ⇒ Page 35-13	Output shaft ⇒ Page 35-43	Differential ⇒ Page 39-25
Parts replaced:	Transmission housing	x		x
	Clutch housing	x	x	x
	Input shaft	x		
	Output shaft (final drive)		x	
	Differential housing			x
	Input shaft tapered roller bearing	x		
	Output shaft tapered roller bearing		x	
	Differential tapered roller bearing			x
	4th gear	x		x

Differential, adjusting

Adjustment of the differential is necessary if any of the following components is replaced:

- Transmission housing
- Clutch housing
- Differential housing
- Differential tapered roller bearings

Adjustment overview ⇒ Page 39-24 .

- Press tapered roller bearing outer race into clutch housing without adjustment shim, using 30-205 thrust pad ⇒ Page 39-16 .

CAUTION!

Tapered roller bearing inner and outer races are a matched pair. DO NOT interchange.

- Press tapered roller bearing outer race into transmission housing without adjustment shim, using 30-205 thrust pad ⇒ Page 39-18 .
- Install differential in clutch housing.
- Install transmission housing with 5 bolts and tighten.
    - Tightening torque: 25 Nm (18 ft lb)

39-26

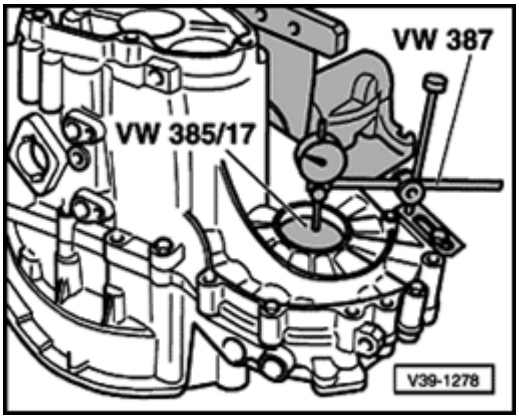

- Install dial indicator with mounting fixtures as shown. Set indicator to zero with 1 mm preload.
- Move differential gear up and down, observe and record play on dial indicator.

♦ Example: measured play = 0.70 mm

CAUTION!

Do not rotate the differential while making a measurement, as this will cause the bearings to settle and result in a false measurement.

Adjustment shim thickness, determining

The correct shim thickness is selected by adding:

♦ specified bearing preload (a constant, 0.40 mm)

♦ the measured axial play (example: 0.70 mm)

Example:

Measured play (example)	0.70 mm
+ Preload (constant)	0.40 mm
Required shim thickness	= 1.10 mm

- Remove transmission housing.
- Pull out bearing outer race (⇒ Page 39-18) or drive out using VW 473 thrust pad.

- Install adjustment shims of the correct thickness.

Note:

When using two shims, install thickest shim first.

Available shims

Thickness (mm)	Part number
0.65	02A 409 210
0.70	02A 409 210 A
0.75	02A 409 210 B
0.80	02A 409 210 C
0.85	02A 409 210 D
0.90	02A 409 210 E
0.95	02A 409 210 F
1.05	02A 409 210 G
1.05	02A 409 210 H
1.10	02A 409 210 J
1.15	02A 409 210 K
1.20	02A 409 210 L
1.25	02A 409 210 M

If the size of shim required is larger than those listed in the table, insert two shims totalling the correct figure.

Varying tolerances make it possible by measuring the shims to obtain the exact shim thickness required.

39-28

CAUTION!

Part numbers are for reference only. Check with Parts Department for latest information.

Notes:

- *If required shim thickness exceeds largest shim listed in table use two thinner shims that, when combined, correspond to the required thickness.*
- *Different tolerances make it possible to select the exact shim size required.*

- Re-install outer race and attach transmission housing.

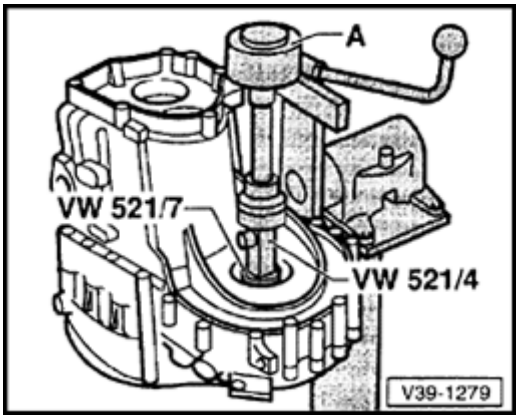

Friction moment, checking

A - Commercial torque gauge 0-600 Ncm (0-54 in lb)

- Lubricate tapered roller bearings with transmission oil and check as shown.

Specifications:

- New bearings: 120-320 Ncm (11-29 in lb)
- Used bearings: at least 30 Ncm (3 in lb)

Volkswagen Passat

Official Factory Repair Manual

1995, 1996, 1997
Gasoline, Turbo Diesel, TDI
4-cylinder and VR6, including wagon

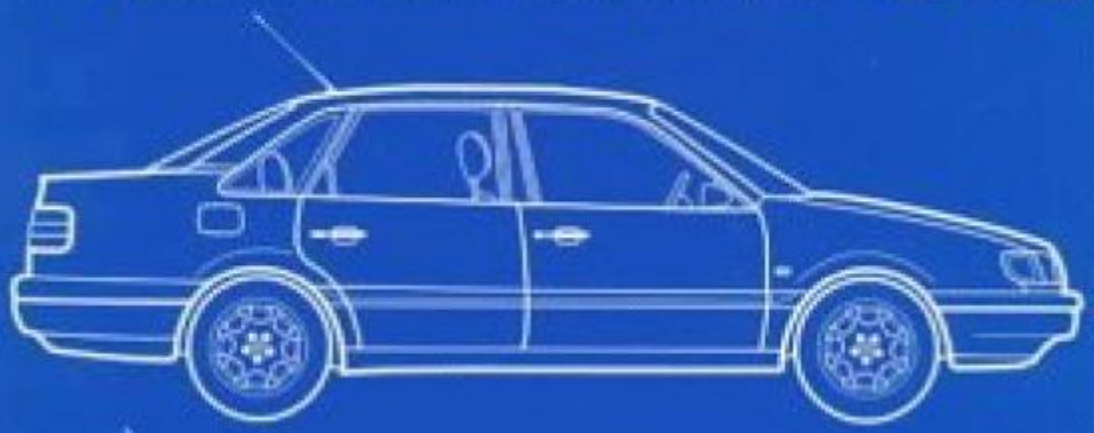

Robert Bentley

PASSAT '95 - '97

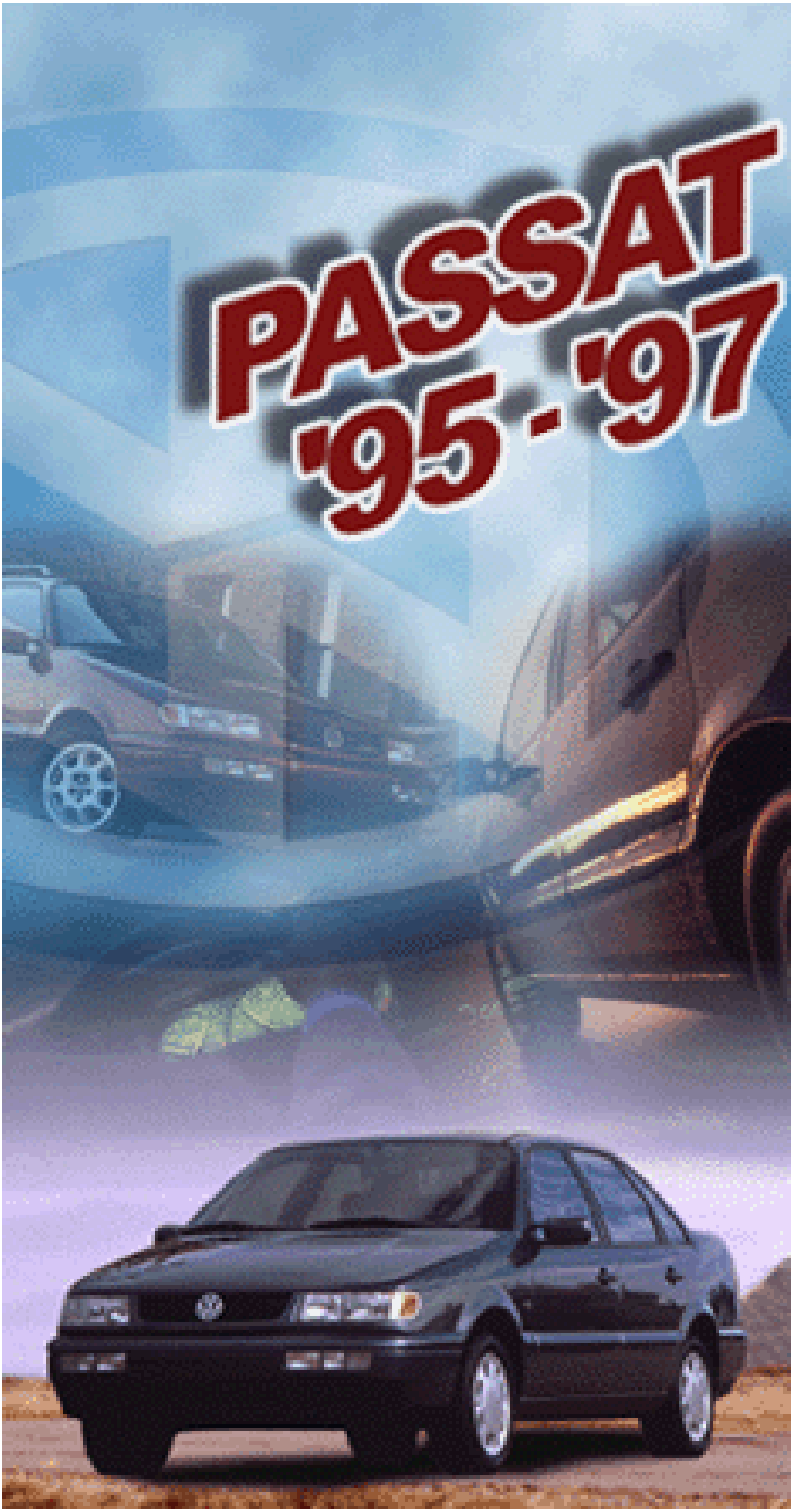

4 Spd. Automatic Transmission 01M

00 - General, Technical data

Transmission, identification

Automatic transmission 01M, general information

Code letters, transmission allocation, ratios, equipment
Capacities
Repair instructions

01 - On Board Diagnostic (OBD)

On Board Diagnostic (OBD), function
On Board Diagnostic technical data
On Board Diagnostic (OBD) - guide

Electrical component locations

On Board Diagnostic program
Scan Tool (ST) V.A.G 1551, connecting and selecting functions
List of selectable functions
Diagnostic Trouble Code (DTC) Memory, checking

Diagnostic Trouble Code (DTC) table

Diagnostic Trouble Code (DTC) Memory, erasing
Basic setting, initiating
Measured value block, reading

Test table
Transmission: electrical test

Electrical check

Test table

32 - Torque converter

Torque converter
Torque converter, identification
Torque converter, draining
Torque converter oil seal, removing and installing

Torque converter

37 - Automatic Transmission - Controls, Housing

Selector mechanism, servicing
Checking operation
Selector lever cable, checking and adjusting
Ignition lock, checking

Shift mechanism, disassembling and assembling

Selector lever, disassembling and assembling

Locking cable, removing and installing
Locking cable, adjusting

Transmission, checking
Troubleshooting 4-speed automatic transmission
Shift points, checking
Transmission shifts too early or too late into the next gear

Shift points in km/in (mph)
Stall speed, measuring

Stall Speed Chart
Main Pressure, measuring

Transmission, removing and installing
ATF level, checking and topping off
ATF level, checking
ATF, topping off
ATF, changing

Transmission with selector elements

Position of selector elements
Transmission, disassembling and assembling

ATF cooler and ATF filler tube, removing and installing

Planetary transmission, disassembling and assembling - Overview-
I - ATF pump to supporting tube, removing and installing
II - Reverse gear clutch -K2- to large sun gear, removing and installing
III - Free wheel and reverse gear brake -B1-, removing and installing
IV - Planet carrier and transmission housing with input gear and cover, assembling

Planetary transmission, disassembling and assembling

Transmission, removing and installing
Vehicles with 6 cylinder engines

Planetary transmissionadjustments, overview

Planet carrier, adjusting

Reverse gear brake - B1-, adjusting

Clutch play between -K1- and -K2-, adjusting

2nd and 4th gear brake -B2-, adjusting
Starter bushing removing and installing

38 - Automatic Transmission - Gears, Hydraulic controls

ATF pump, disassembling and assembling

Free wheel with -B1- piston, disassembling and assembling

1st to 3rd gear clutch -K1-, disassembling and assembling

Reverse gear clutch -K2-, disassembling and assembling

4th gear clutch -K3- with turbine shaft, disassembling and assembling

Valve body, removing and installing

Parking lock, disassembling and assembling

39 - Final drive, Differential

Final drive oil level, checking
Oil seal for drive flange, removing and installing

Final drive, disassembling and assembling

Input gear, removing and installing

Drive pinion, removing and installing

Differential, removing and installing

Differential, disassembling and assembling

Final drive, adjusting
Adjustment overview

Adjustments to be completed after replacing individual components

Drive pinion, adjusting
Input gear, adjusting
Differential, adjusting

Transmission, identification

The 4-speed automatic transmission 01M is installed in the Passat 1995 ➢ in combination with a 4- or 6-cylinder engine. Applications ⇒ Page 00-6 .

Location on transmission

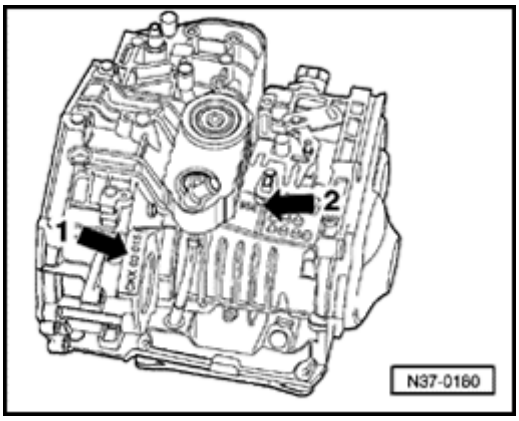

- Code letters (arrow 1)

  Automatic transmission 01M (arrow 2)

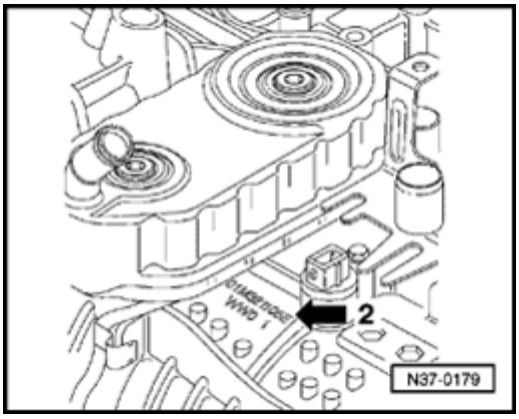

- **Automatic transmission 01M (arrow 2)**

00-2

Example:	CKX	03	01	5
	Code letters	Day	Month	Year (1995) of manufac- ture

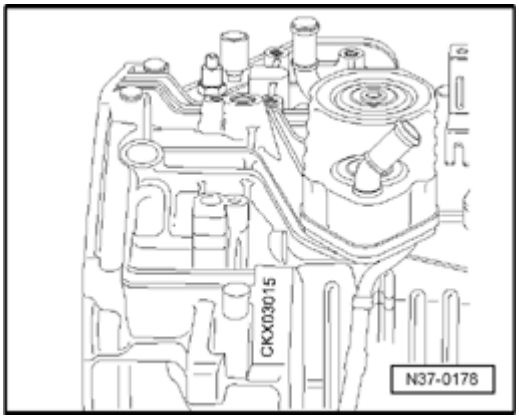

The code letters of the transmission also appear on the vehicle data plates.

Automatic transmission 01M, general information

There are several fundamental differences between the 4-speed automatic transmission 01M and the 096 automatic transmission. These changes are briefly mentioned below.

Transmission

The 4-speed automatic transmission 01M is equipped with 4 hydraulically activated forward gears. When the lock-up clutch is closed these forward gears become mechanically driven gears by cutting out the torque converter slip.

Torque converter

The torque converter for the 01M transmission is equipped with a lock-up clutch. The lock-up clutch is closed depending on load and speed and drives 1st, 2nd, 3rd and 4th gears mechanically independent of slip.

00-4

Transmission Control Module (TCM) - 217-
with gear changes based on driving situation

Advantages:

- Gear changes fuel consumption orientated
- Maximum engine output always available
- Individual adaptation of gear change points for all driving situations
- Gear change points are infinitely variable

Gear change point variations for gradients

An additional gear change map automatically selects gear changes for gradients dependent upon Accelerator Pedal position and driving speed.

- Gear change map for extreme uphill stretches is matched to engine output
- Gear change map for extreme downhill stretches is matched to the braking effect of the engine

00-5

New ATF for Volkswagen (VW ATF)

The VW ATF has a yellowish color.

The transmission final drive and planetary gearbox are filled with VW ATF.

- The ATF dipstick has been discontinued; the ATF level is checked using a new procedure.
- Checking the ATF level or changing the ATF is now performed during the inspection service.
- Only VW ATF must be used.

Container size 1.0 Liter - Part No. G 052 162 A2

Note:

Only the VW ATF available as a replacement part can be used in the automatic transmission 01M.

Code letters, transmission allocation, ratios, equipment

Automatic transmission			**01M**		
Transmission	Code letters		**CLB**	**CLK**	**CK**
	Manufactured	from to	01.95	01.95	01.95
Torque converter	Code letters		**CDV**	**ADB**	**ADB**
Valve body	Code letters		**CA**	**CA**	**CA**
	Manufactured	from to	01.95	01.95	01.95
Number of plates			Inner	Inner	Inner
	Clutch -K1-		5	5	5
	Clutch -K2-		5	5	5
	Clutch -K3-		6	5	5
	Brake -B1-		5	5	5
	Brake -B2-		6	6	6
Allocation	Model		Passat 1995 ➤	Passat 1995 ➤	Passat 1995 ➤
	Engine		2.8 L - 128 kW	2.0 L - 85 kW 2.0 L - 79 kW	1.8 ltr. - 66 kW 1.8 ltr. - 74 kW

00-7

Automatic transmission			**01M**		
Transmission	Code letters		**CLB**	**CLK**	**CK**
Ratios	1st gear		2.714	2.714	2.714
	2nd gear		1.441	1.441	1.441
	3rd gear		1.000	1.000	1.000
	4th gear		0.743	0.743	0.743
	Reverse gear		2.884	2.884	2.884
Intermediate drive	No. of teeth	Input gear	45	45	45
		Output gear	44	44	44
	Ratio		0.978	0.978	0.978
Final drive	No. of teeth	Drive pinion	20	18	17
			74	76	77
	Ratio		3.700	4.222	4.529
Drive shaft	Flange diameter mm		100	Tripodic	Tripodic
ATF cooler	Equipment		Pressure-side 6-row	Pressure-side 6-row	Pressure-side 6-row

00-8

Automatic transmission			**01M**		
Transmission	Code letters		**CK**		
	Manufactured	from to	01.95		
Torque converter	Code letters		**CDB**		
Valve body	Code letters		**CA**		
	Manufactured	from to	01.95		
Number of plates			Inner	Inner	Inner
	Clutch -K1-		5		
	Clutch -K2-		5		
	Clutch -K3-		6		
	Brake -B1-		5		
	Brake -B2-		6		
Allocation	Model		Passat 1995 ➢		
	Engine		1.9 ltr. - 66 kW Diesel -TDI		

00-9

Automatic transmission			**01M**		
Transmission	Code letters		**CK**		
Ratios	1st gear		2.714		
	2nd gear		1.441		
	3rd gear		1.000		
	4th gear		0.743		
	Reverse gear		2.884		
Intermediate drive	No. of teeth	Input gear	45		
		Output gear	44		
	Ratio		0.978		
Final drive	No. of teeth	Drive pinion	20		
		Final drive gear	72		
	Ratio		3.273		
Drive shaft	Flange diameter mm		Tripodic		
ATF cooler	Equipment		Pressure-side 6-row		

00-10

Capacities

Planetary gear

Capacities	Planetary gear	Automatic trans
Initial filling	5.3 L	01M
Oil change	approx. 3.0 L	
Lubricant	VW ATF	

Final drive

Capacities	Final drive	Automatic trans
Initial filling	0.75 L	01M
Oil change	Filled for life No change	
Lubricant	VW ATF	

VW ATF is available as a replacement part.

Container size 0.5 L -Part No. G 052 162 A1

Container size 1.0 L-Part No. G 052 162 A2

Note:

Only the VWATF available as a replacement part can be used in the automatic transmission 01M.

Repair instructions

The maximum possible care and cleanliness and proper tools are essential to ensure satisfactory and successful transmission repairs. The usual basic safety precautions also apply when performing vehicle repairs.

A number of generally applicable instructions for individual repair procedures, which are otherwise mentioned at various points in the Repair Manual, are summarized here. They apply to this Repair Manual.

Transmission

When an automatic transmission is replaced, check the VWATF in the planetary gearbox ⇒ Page 37-46 and the VW ATF in the final drive ⇒ Page 39-1 and top off as necessary. ATF and oil capacities and specifications ⇒ Page 00-10 .

- During installation, ensure that the dowel sleeves are installed correctly.

00-12

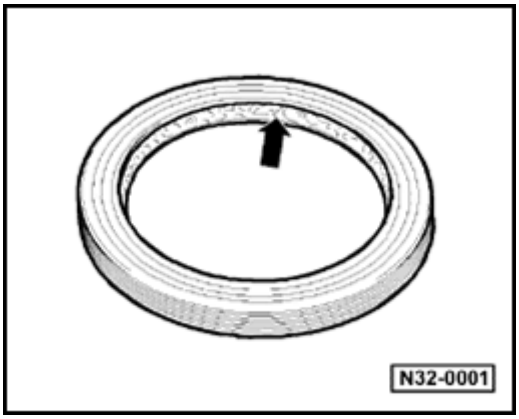

Gaskets, oil seals

- Radial shaft seals: Pack space between sealing lips with grease before installing.
- Always install new O-rings.
- After installing check ATF level in final drive or planetary gearbox, adjust to correct level if necessary.

Locking elements

- Do not overstretch circlips; replace if necessary.
- Circlips must be properly seated in the grooves.

Nuts, bolts

- Nuts and bolts for attaching covers and housings must be loosened and tightened in a crosswise pattern.
- Especially delicate components - e.g. valve body- must always be precisely aligned and loosened/tightened in a diagonal pattern in several stages.
- The tightening torques stated apply to unoiled nuts and bolts.
- Threads of bolts that are secured by locking fluid are to be cleaned with a wire brush. Then insert bolts with AMV 185 101 A1.
- Always replace self-locking nuts.

Bearings

- Install needle bearings with the inscribed side (thicker metal) facing the drift.
- Lubricate transmission bearings with gear oil before installing. Lubricate components thoroughly for friction torque measurements.
- Heat the inner races of taper roller bearings to approx.100 ° C (212 ° F) before inserting.
- Do not interchange the inner and outer races of same size bearings.
- Always replace taper roller bearings which are mounted on a shaft together and use bearings from a single manufacturer

Shims

- Measure shims at several points with a micrometer. Different tolerances make it possible to obtain the exact shim thickness required.
- Check for burrs and damage. Install only shims which are in perfect condition.

Inner plates

- Soak new inner plates in ATF fluid for 15 minutes before installing.

Valve body

- Replace the valve body if any of the selector elements are scorched.

Clutches

- Clutches K1, K2 and K3 should initially be disassembled only for cleaning. If parts are worn or damaged, replace the clutch.

On Board Diagnostic (OBD)

- Before performing repairs to the automatic transmission, determine the cause of the malfunction as precisely as possible with the aid of the On Board Diagnostic (OBD) capability Repair Manual, On Board Diagnostics, Repair Group 01 .

On Board Diagnostic (OBD), function

The automatic transmission is controlled electro-hydraulically. "On Board Diagnostic" capability refers specifically to the electrical and electronic controls.

The Transmission Control Module (TCM) -J217- receives information from components that affect selection of gears and passes the information on to solenoid valves that control the valves in the valve body.

The Transmission Control Module (TCM) -J217- is equipped with a Diagnostic Trouble Code (DTC) Memory so that in the event of an electronic/electrical component malfunction or on open circuit, the cause can be determined quickly. Malfunctions are recognized by electrical signals and stored in the DTC Memory

Functions of Transmission Control Module

Malfunctions in the monitored sensors or components are stored in the DTC Memory along with an indication of the type of malfunction.

Malfunctions that only occur once become sporadic (temporary) malfunctions. Sporadic malfunctions are also coded as such.

The Transmission Control Module (TCM) -J217- analyzes the information and distinguishes different types of malfunctions. Those that do not reoccur within 5 to 20 km (3 to 12 miles) or within 6 to 24 minutes are stored as sporadic malfunctions. DTC table, ⇒ Page 01-29 .

Electrical malfunctions that affect vehicle performance can be identified with the Scan Tool V.A.G 1551. The On Board Diagnostic (OBD) capabilities can only be fully exploited using operating mode 1 ("Rapid data transfer").

Functions that the Scan Tool V.A.G 1551 can register ⇒ Page 01-26 , List of selectable functions.

Transmission Control Module safety functions

If critical malfunctions occur while driving, the transmission will continue to operate in an emergency running mode. If the malfunction occurs in "D", "3" or "2", then 3rd gear emergency mode is activated.

If the malfunction occurs in "1","P", "N" or "R" then the emergency running mode for that stage is activated.

If the engine is started again in the emergency running mode and the malfunction occurs when selector lever is in position "D", "3" or "2" then 3rd gear is activated hydraulically until the malfunction is repaired.

If there are malfunctions which can lead to emergency running, the transmission will remain in the emergency running mode until the malfunction is no longer recognized by the TCM over a predetermined period.

Malfunctions that may activate emergency running mode

Open circuit in wiring, short-circuit, electrical or hydraulic components faulty.

01-3

Transmission Control Module (TCM) recognition of malfunctions

If a malfunction exists it is stored as a static malfunction. If the malfunction no longer exists after a predetermined period or distance travelled, it is considered a sporadic malfunction.

Malfunctions that are stored in the DTC Memory as sporadic malfunctions will be displayed as such when retrieved by Scan Tool V.A.G 1551. In such cases "SP" appears on the right of the display. If the printer is switched on, "sporadic DTC" is printed out after the malfunction is addressed.

Malfunctions which are stored in the DTC Memory as sporadic malfunctions are automatically erased after 1,000 km (600 miles) or 20 hours driving time.

On Board Diagnostic technical data

Memory	
♦ Permanent memory	yes
♦ Temporary memory	no
Data output	
♦ Rapid data transfer	yes
♦ Blink code output	no
Output Diagnostic Test Mode (DTM)	no
Basic setting	yes
Transmission Control Module (TCM) coding	no
Reading measured value block	yes
Component locations	⇒ Page 01-7

01-5

On Board Diagnostic (OBD) - guide

Troubleshooting Automatic Transmission with Scan Tool V.A.G 1551

Connect Scan Tool V.A.G 1551 and select

1- Rapid data transfer

↓

Enter address word 02 transmission electronics

Compare control module identification

Identification not OK.

Replace Control Module

A

Read DTC Memory 02 → No DTC recognized

Correct malfunction per DTC table

End

Read measured value block 08

Replace component

B

Transmission: Perform electrical check

Specification attained

C

Specification not attained

D

01-6

A **B** **C** **D**

↓ ↓ ↓ ↓

↓ ↓ ↓ Check wiring according to CFD

↓ ↓ ↓ ↓

→ → → → → → Read DTC Memory 02 and erase DTC ← Replace component

Memory 05

↓

Initiate basic setting 04

(only initiate if required in instructions)

↓

Road test and read DTC

Memory 02 again

↓

If "no malfunction recognized !" is indicated on display

the On Board Diagnostic is completed

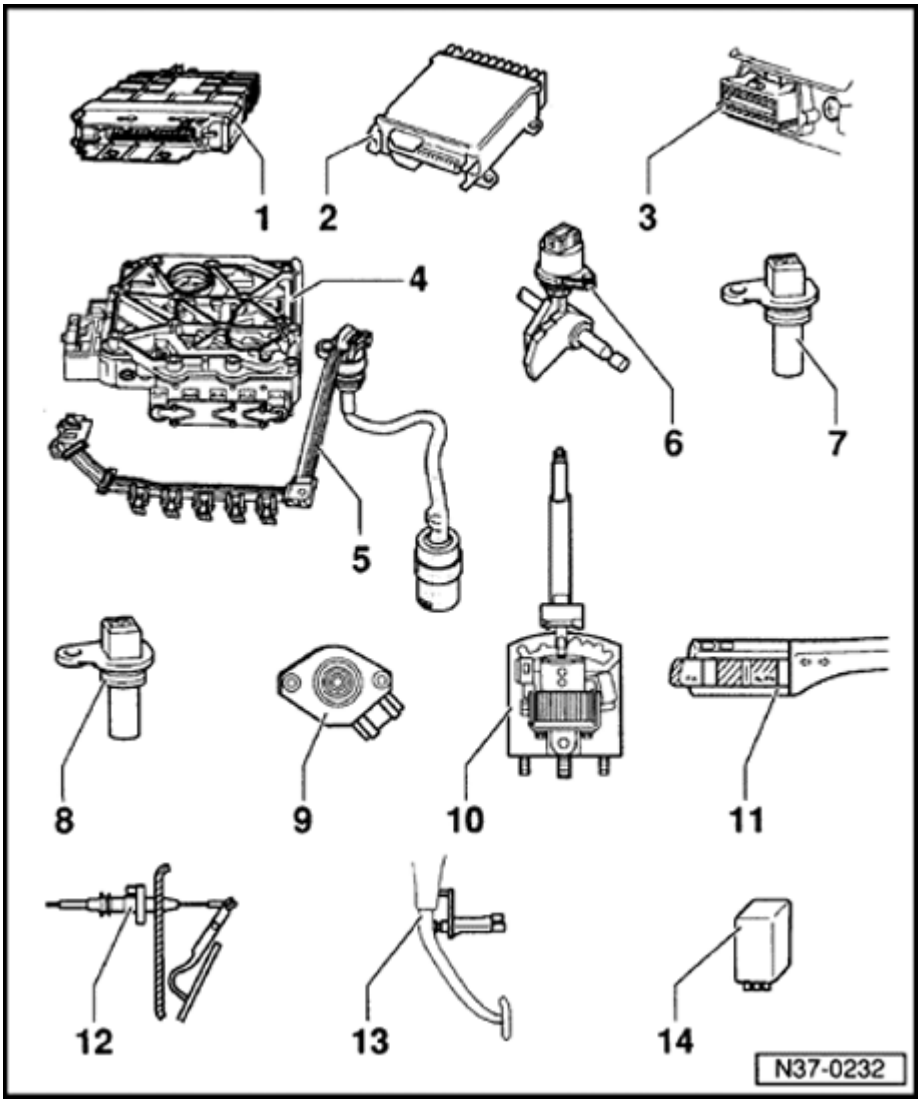

Electrical component locations

1 - Transmission Control Module (TCM) - 217-

- Location ⇒ Fig. 18
- Removing ⇒ Fig. 19
- Installing ⇒ Fig. 20
- Checked by On Board Diagnostic (OBD) ⇒ Page 01-22

2 - Engine Control Module (ECM)

- Location ⇒ Fig. 21
- Removing and installing

⇒ *Repair Manual, 2.0 Liter 4-Cyl. 2V Fuel Injection & Ignition, Engine Code(s): ABA m.y. 1996-1997, Repair Group 24 or 25*

Note:

If Engine or Transmission Control Modules are replaced, the system must be put into basic setting ⇒ Page 01-44 , Initiating basic setting.

01-8

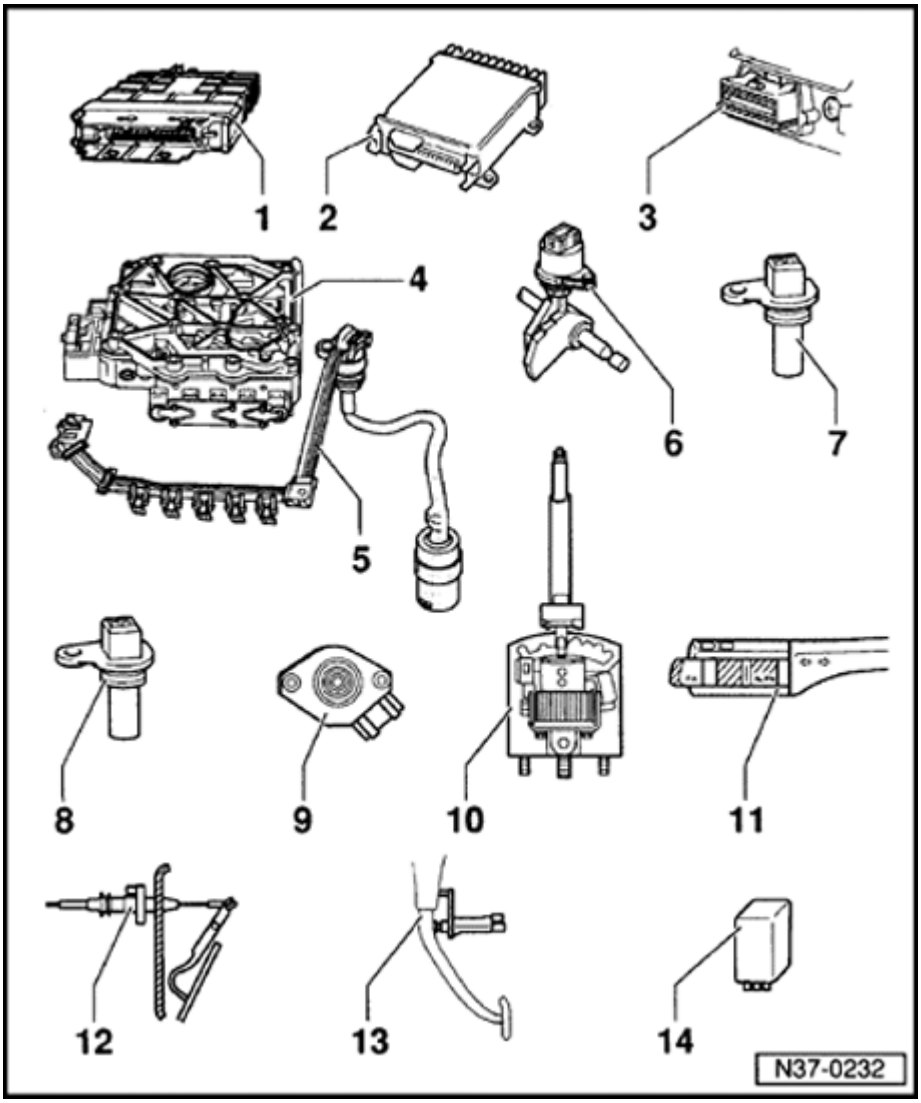

3 - Data Link Connector (DLC)

- Location ⇒ Fig. 22

4 - Valve body

- Location ⇒ Fig. 23
- Removing and installing ⇒ Page 38-20
- The solenoid valves -N88-, -N89-, -N90-, -N91-, -N92-, -N93- and -N94- are attached to the valve body
- Components are checked by On Board Diagnostic (OBD)

5 - Conductor strip with integrated Transmission Fluid Temperature Sensor -G93-

- Location ⇒ Fig. 24
- Removing and installing ⇒ Fig. 25
- -G93- is checked by OBD

6 - Multifunction Transmission Range (TR) Switch -F125-

- Location and removing and installing ⇒ Fig. 26
- Checked by OBD

01-9

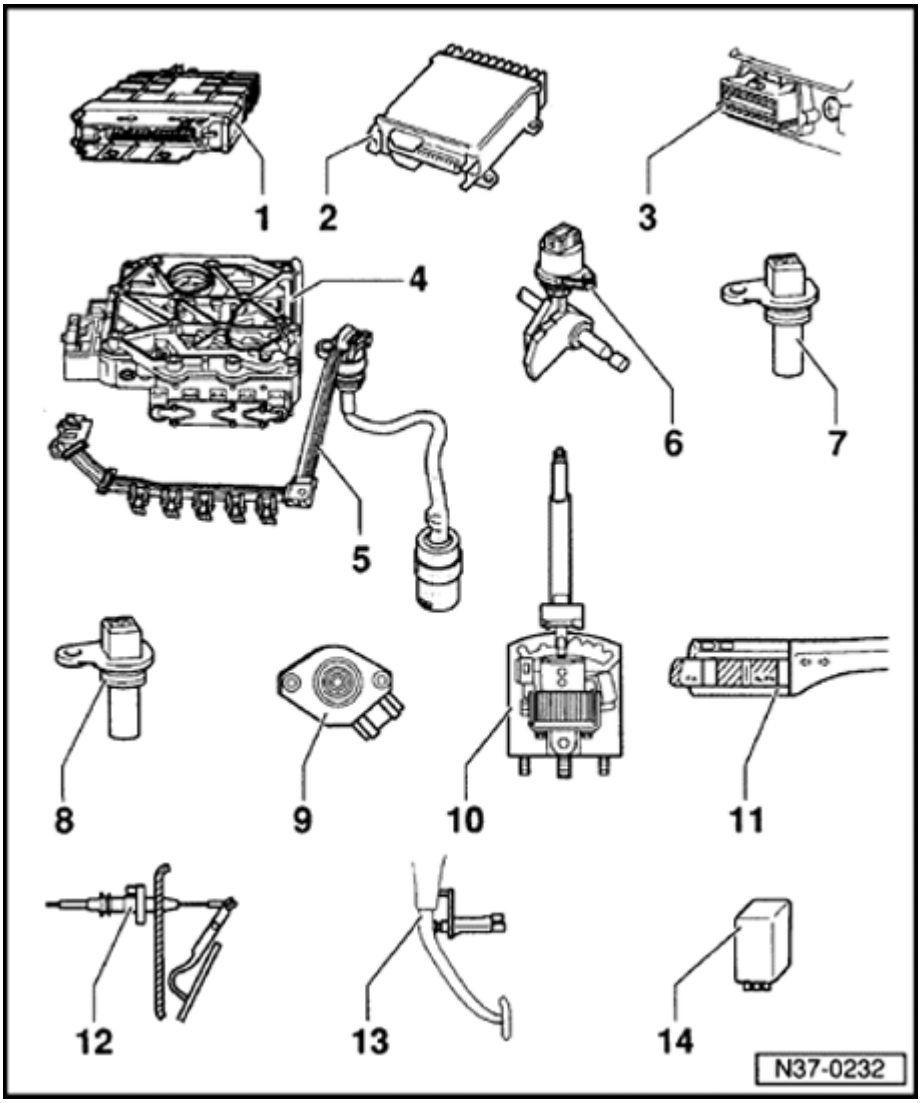

7 - Transmission Vehicle Speed Sensor (VSS) - G38-

- Location and removing and installing ⇒ Fig. 27
- The connector T2 to wiring harness is white
- Checked by OBD

Note:

Do not interchange connector T2 for Transmission Vehicle Speed Sensor (VSS) -G38- and Vehicle Speed Sensor (VSS) -G68-

8 - Vehicle Speed Sensor (VSS) -G68-

- Location and removing and installing ⇒ Fig. 28
- The connector T2 to wiring harness is black
- Checked by OBD

Note:

Do not interchange connector T2 for Transmission Vehicle Speed Sensor (VSS) -G38- and Vehicle Speed Sensor (VSS) -G68-

01-10

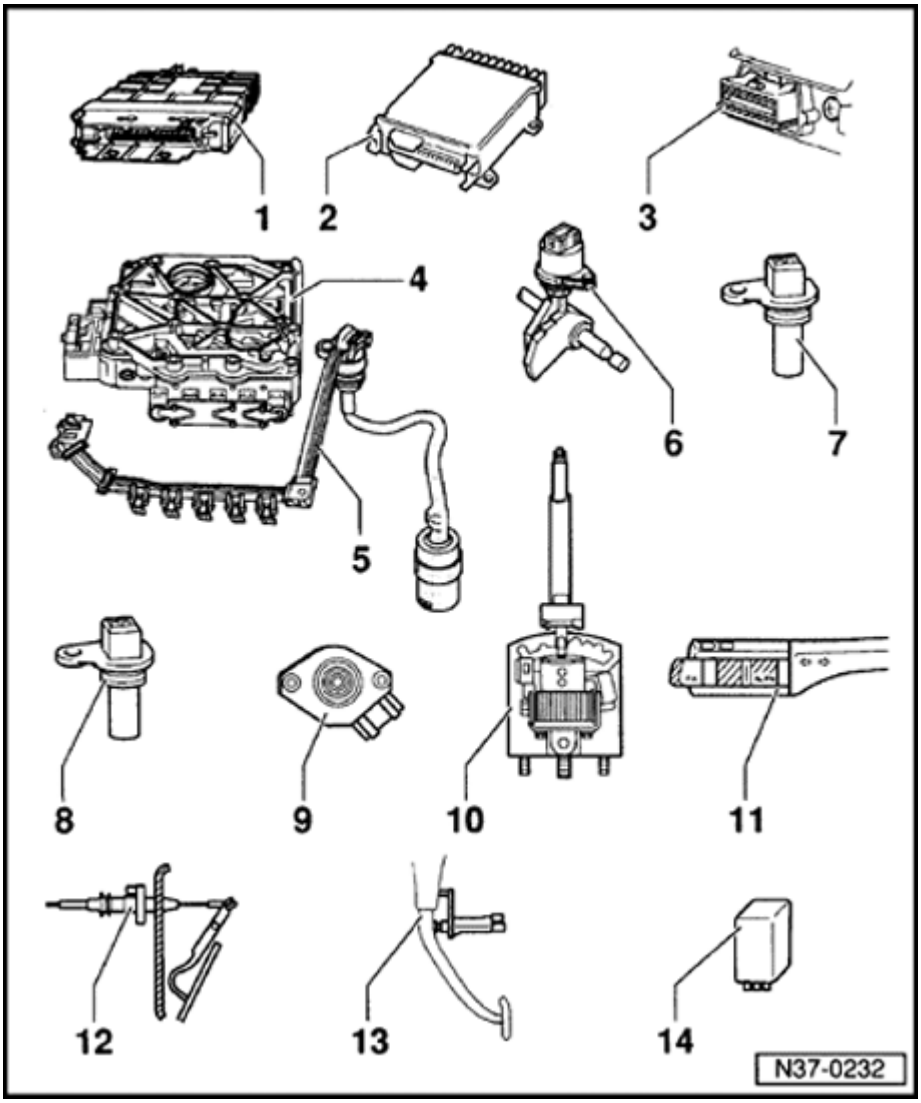

9 - Throttle Position (TP) Sensor -G69-

- Location ⇒ Fig. 29
- Removing and installing

Repair Manual Fuel Injection Ignition,Repair Group 24 or 25

- Various types of TP Sensor according to engine version.
- On vehicles from 01.93 with 6-Cyl. engine, TP Sensor signal is directed via ECM to TCM. The signal can only be checked in measured value block ⇒ Page 01-46 . If malfunction indicated in TP Sensor, then also perform OBD on ECM.

Repair Manual, On Board Diagnostics, Repair Group 01; for relevant engine code

- After repairs initiate basic setting ⇒ Page 01-44
- The signal of TP Sensor can be checked by On Board Diagnostic (OBD).

01-11

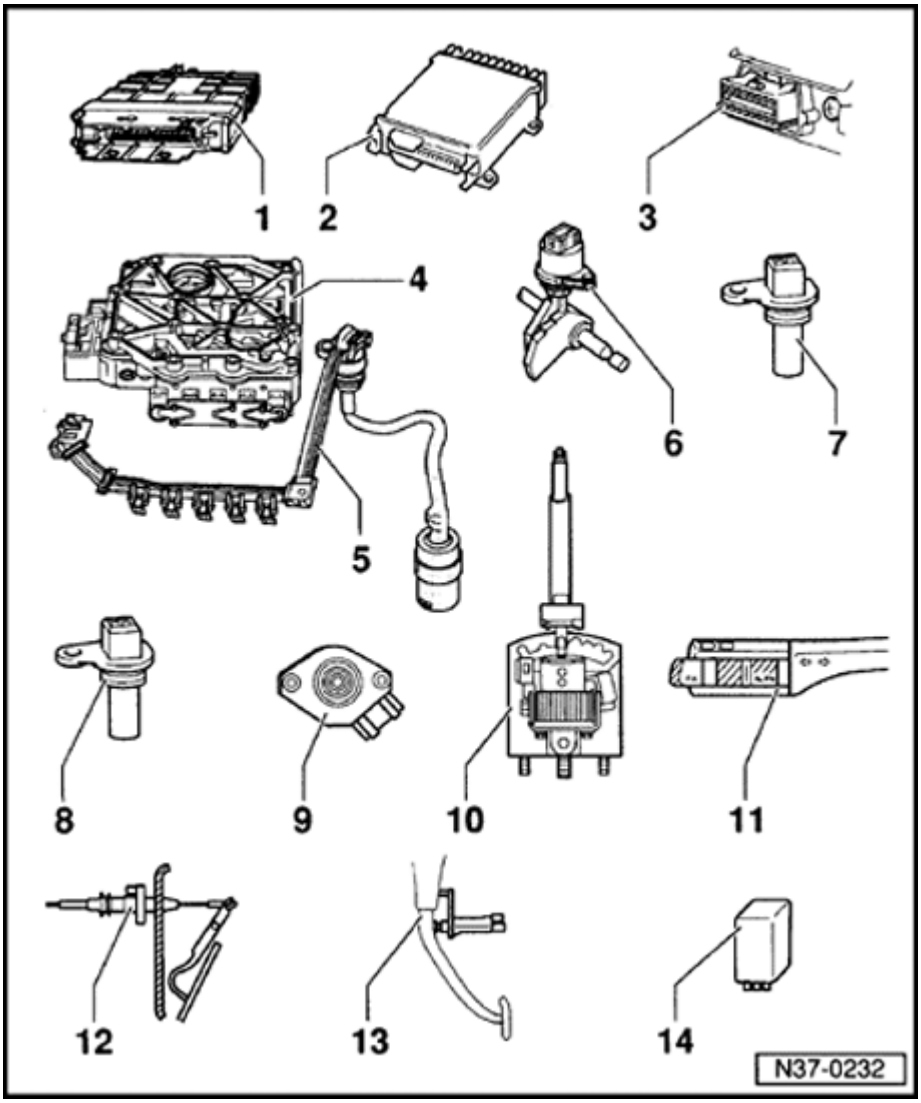

10 - Shift Lock Solenoid - N110-

- Location ⇒ Fig. 30
- Removing and installing ⇒ Page 37-1
- Can be checked electrically ⇒ Page 01-68 and by reading measured value block ⇒ Page 01-46

11 - Cruise Control Switch - E45-

- Location ⇒ Fig. 31
- Removing and installing

⇒ *Repair Manual, Electrical Equipment, Repair Group 94 Servicing steering column switch*

- Can be checked by reading measured value block ⇒ Page 01-46

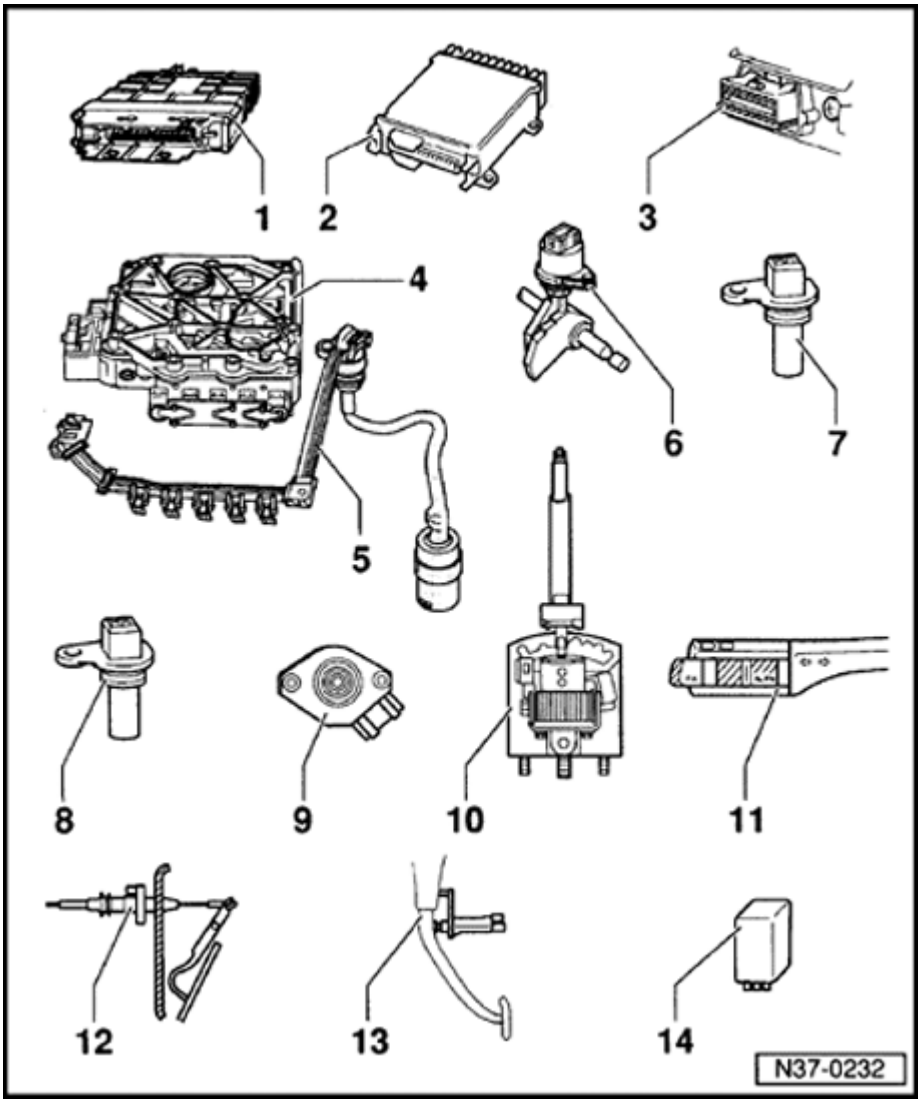

12 - Kick Down Switch -F8-

- Location ⇒ Fig. 32
- When removing and installing Kick Down Switch, remove and install the throttle cable, then adjust afterwards
- Adjusting throttle cable

Repair Manual Fuel Injection Ignition,Repair Group 20

- Can be checked electrically ⇒ Page 01-68 and by reading measured value block ⇒ Page 01-46

13 - Brake Light Switch -F-

- Location: ⇒ Fig. 33
- Removing and installing

⇒ *Repair Manual Suspension, Wheels, Brakes, Steering, Repair Group 47 Assembly overview: Pedal cluster, brake pedal*

- Can be checked electrically ⇒ Page 01-68 and by reading measured value block ⇒ Page 01-46

14 - Park/Neutral Position (PNP) Relay - 226-

- Location ⇒ Fig. 34

01-13

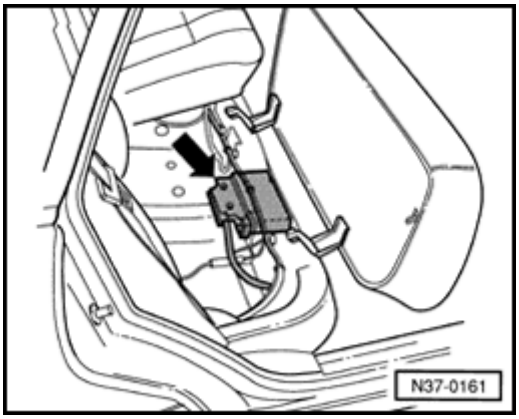

Fig. 18 Transmission Control Module (TCM) - 217-, location

The TCM (arrow) is located under the rear seat.

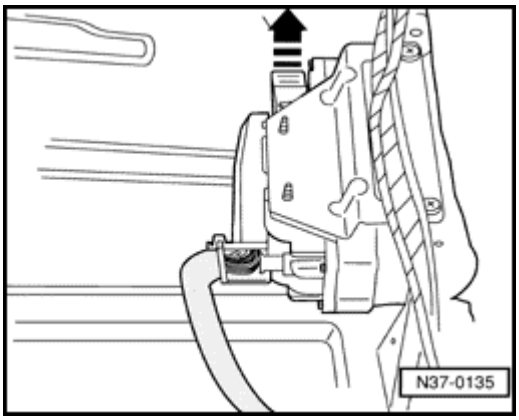

Fig. 19 Transmission Control Module (TCM) - 217-, removing

- Release multi-pin connector, then pull connector off TCM.
- Remove TCM.

01-14

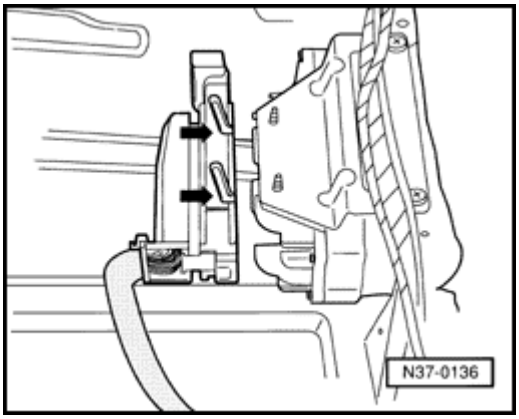

Fig. 20 Transmission Control Module (TCM) - 217-, installing

- Locate multi-pin connector on TCM -J217- pins (arrows) then lock multi-pin connector.

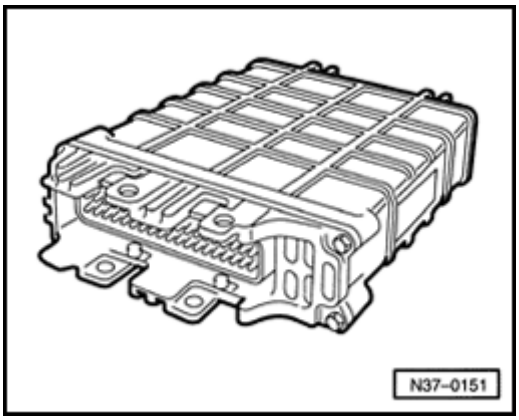

Fig. 21 Engine Control Module (ECM), location

The ECM is located in plenum chamber, right.

Removing and installing ECM

Repair Manual, Fuel Injection Ignition, Repair Group 24 or 25

01-15

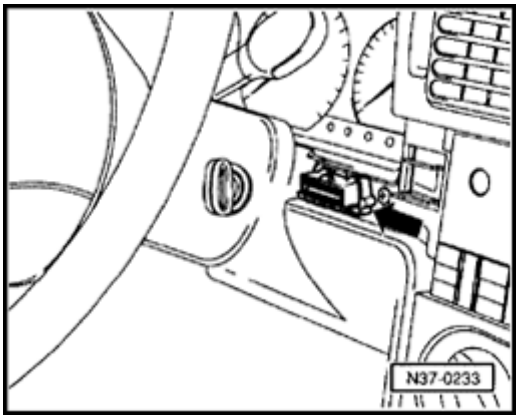

Fig. 22 Data Link Connectors, location

The DLCs are located behind the cover by the instrument cluster

- Remove ashtray and slide cover for DLCs to left (arrow).

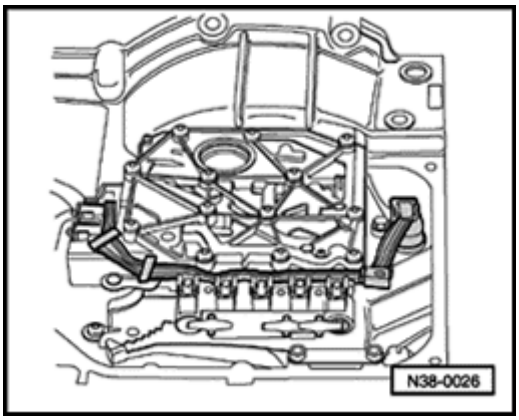

Fig. 23 Valve body, location

The valve body is bolted to underside of the transmission housing inside the oil pan.

- The Solenoid Valves -N88-, -N89-, -N90-, -N91-, -N92-, -N93- and -N94- are attached to the valve body
- Removing and installing valve body ⇒ Page 38-20 .

01-16

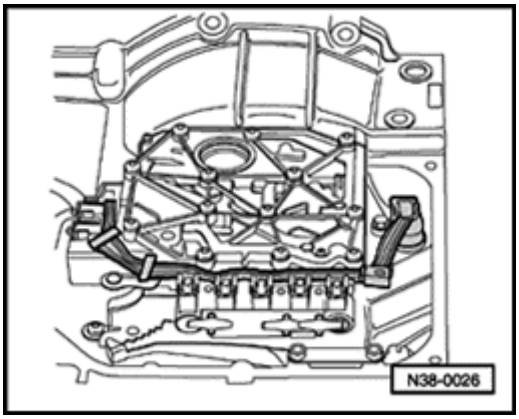

Fig. 24 Conductor strip with integrated Transmission Fluid Temperature Sensor -G93-, location

The conductor strip is located in the oil pan on the valve body .

- The conductor strip can be changed with transmission installed without removing the valve body.
- Do not kink or damage the conductor strip.

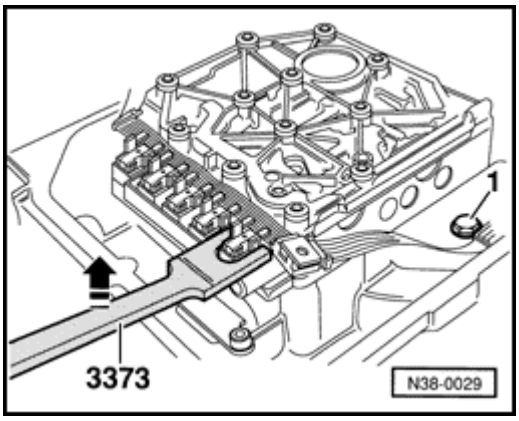

Fig. 25 Conductor strip, removing and installing

- Separate connector at transmission and remove retaining clamp.
- Drain ATF and remove oil pan
- Remove cable guide
- Pry conductor strip off solenoid valve in direction of arrow with special tool 3373.

Note:

If the locating points are damaged the valve body must be exchanged.

Installation is performed in the reverse order.

01-17

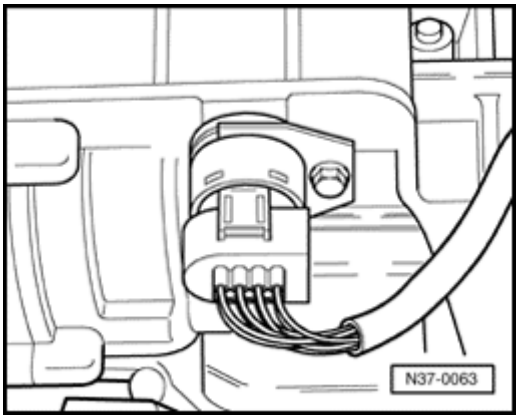

Fig. 26 Multi-function Transmission Range (TR) Switch -F125-, location

The Multi-function TR Switch is located on the rear of the transmission

Multi-function Transmission Range (TR) Switch, removing and installing

- Pull connector off Multi-function TR Switch.
- Remove bolt and retainer.
- Remove Multi-function TR Switch.
- Replace seal.

Installation is performed in the reverse order.

- Tighten bolt to10 Nm (7 ft lb).

01-18

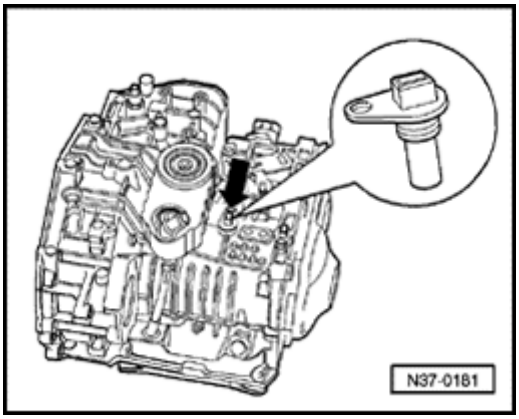

Fig. 27 Transmission Vehicle Speed Sensor (VSS) -G38-, location

The Transmission VSS (arrow) is located on top of the transmission.

Transmission VSS -G38-, removing and installing

- Disconnect connector from sensor.
- Remove bolt and pull sensor out.
- Replace seal.

Installation is performed in the reverse order.

- Tighten bolt to 10 Nm (7 ft lb).

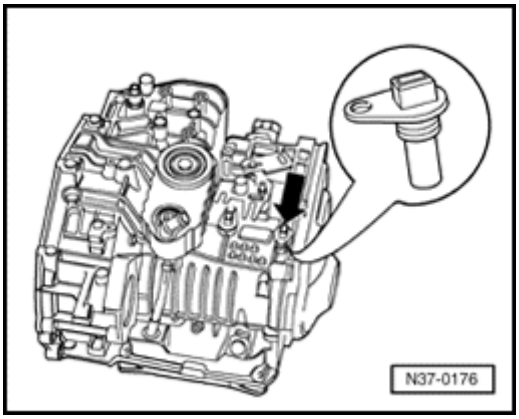

Fig. 28 Vehicle Speed Sensor (VSS) -G68-, location

The VSS -G68- (arrow) is located on top of the transmission.

VSS -G68-, removing and installing

- Disconnect black connector from sensor
- Remove bolt and pull sensor out.
- Replace seal.

Installation is performed in the reverse order.

- Tighten bolt to 10 Nm (7 ft lb).

01-19

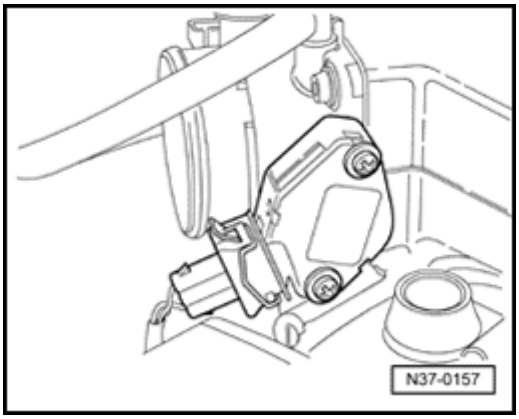

Fig. 29 Throttle Position (TP) Sensor -G69-, location

The throttle valve potentiometer is located on the throttle valve housing (engine). Construction can vary, according to engine.

Throttle Position (TP) Sensor -G69-, removing and installing

Removing and installing is described in relevant injection and ignition assembly group.

Repair Manual, Fuel Injection Ignition, Repair Group 24 or 25

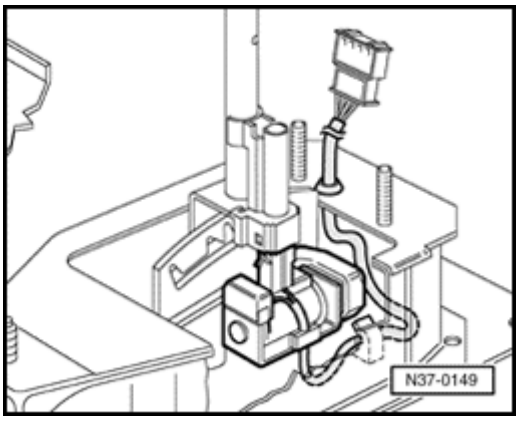

Fig. 30 Shift Lock Solenoid -N110-, location

The Shift Lock Solenoid -N110- is located on the selector lever.

Shift Lock Solenoid -N110-, removing and installing

⇒ Page 37-1 , Servicing selector mechanism

01-20

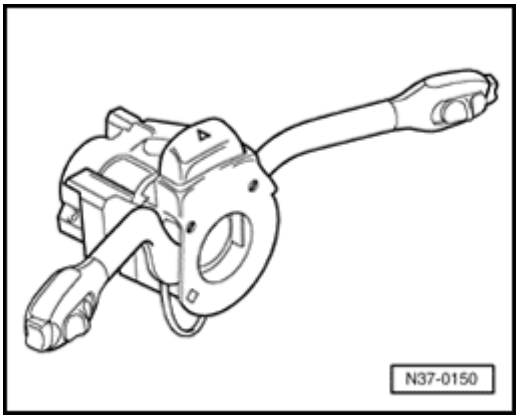

Fig. 31 Cruise Control Switch -E45-, location

Cruise Control Switch -E45- is located on steering column switch.

Cruise Control Switch, removing and installing

⇒ *Repair Manual, Electrical Equipment, Repair Group 94, Servicing steering column switch*

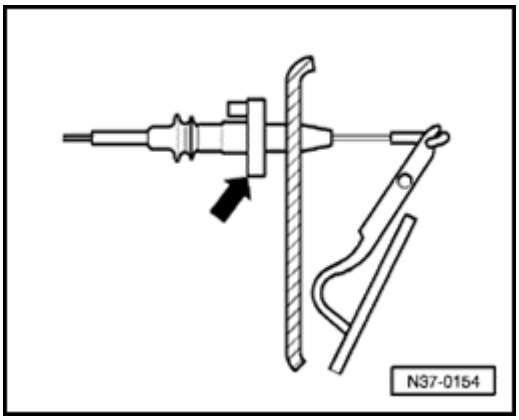

Fig. 32 Kick Down Switch -F8-, location

Kick Down Switch -F8- (arrow) is integrated into accelerator cable and is located on instrument panel in engine compartment.

Kick Down Switch, removing and installing

- Remove the accelerator cable to remove and install the kick Down Switch, then reinstall cable and adjust.

Repair Manual, Engine Mechanical, Repair Group 20; Adjusting accelerator cable

01-21

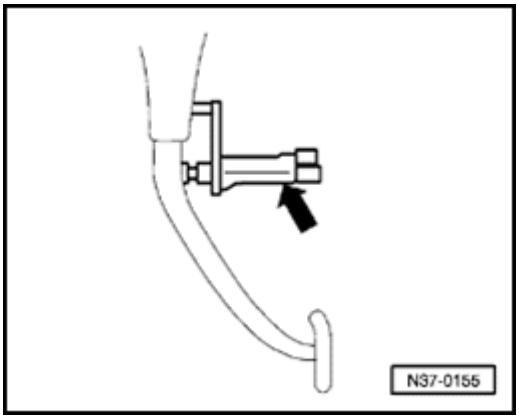

Fig. 33 Brake Light Switch -F-, location

Brake Light Switch -F- (arrow) is located on pedal cluster

Brake Light Switch -F-, removing and installing

⇒ *Repair Manual Suspension, Wheels, Brakes, Steering, Repair Group 47 Assembly overview: Pedal cluster, brake pedal*

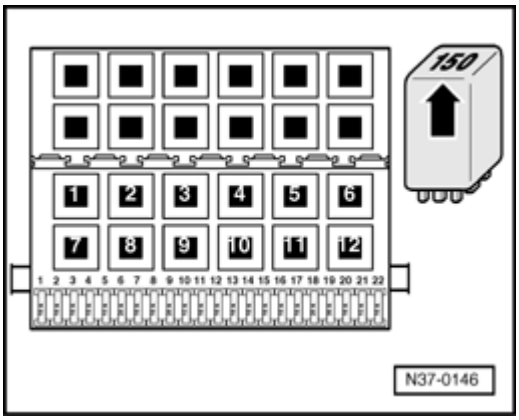

Fig. 34 Park/Neutral Position (PNP) Relay -226-, location

Relay located on additional relay panel under instrument panel, left.

- Relay is marked with number "150" (arrow).

On Board Diagnostic program

Scan Tool (ST) V.A.G 1551, connecting and selecting functions

Test conditions:

- Battery Positive Voltage (B+) OK.
- Fuses 14 and 21 OK.
- Check Ground (GND) connections for transmission
- Selector lever in position "P" and parking brake applied.

- Check Ground connections for corrosion and poor contact; repair if necessary.

- Ground (GND) point is located on left next to relay plate.

- Check Battery Ground strap and Ground strap between Battery and transmission.

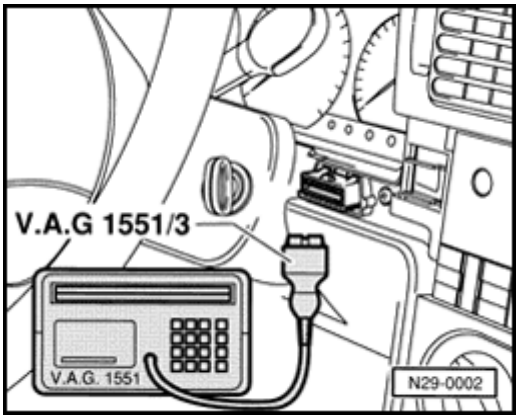

- Remove cover for Data Link Connectors (DLC) to left (arrow).
- With ignition switched off, connect Scan Tool V.A.G 1551 with adapter cable V.A.G 1551/3.

01-23

V. A. G - On Board Diagnostic **1 - Rapid data transfer1)** **2 - Blink code output1)**	**HELP**	≺	Indicated on display: 1) appears alternately ***Notes:*** ♦ *Additional operating instructions can be retrieved by pressing the HELP key of V.A.G 1551.* ♦ *The → key is used for advancing within the program sequence.* ♦ *An automatic check (keys 00) can be carried out in the operating mode 1 Rapid data transfer . Then all vehicle control modules will be checked automatically.* Scan Tool V.A.G 1551 operating instructions. - Switch on ignition. - Switch on printer with the Print key (indicator lamp in key lights up). - Press key 1 for "Rapid data transfer" mode.
Rapid data transfer **Enter address word**	**HELP**	≺	Indicated on display: - Press keys O and 2. (Enter the address word "transmission electronics" with 02.)

01-24

Rapid data transfer HELP
02 Transmission electronics

Indicated on display:

- Confirm entry with key Q.

01M927733BB AG4 Gearbox 01M 2029
Coding 00000 WSC 00000

Indicated on display:

The control module identification, the coding and the dealership number of the V.A.G 1551 are displayed:

Control Module identification

Depending upon build level (program level) the control module can indicate a different control module identification to that shown in the example. Applications of control module see Parts catalog.

- 01 M 927 733 BB: Part No.
- AG4 Transmission 01 M: 4-speed automatic transmission 01 M
- 2029: EPROM (Program level)
- Coding 00000: is not required at present.
- WSC 00000: V.A.G 1551 dealership number with which the last coding was performed.

Control Module does not answer! HELP

Indicated on display:

01-25

- By pressing the HELP key, a list of possible malfunction causes is printed out.

- After eliminating the possible causes of malfunctions, again enter the address word 02 for "transmission electronics" and confirm.

If "Control module does not answer!" again appears:

Control module does not answer! HELP ⮜ Indicated on display:

Check control module voltage supply.

- Perform test step Fig. 1 ⇒ Page 01-68 , Electrical check.
- Check wiring connections to Data Link Connectors (DLC)

⇒*Electrical Wiring Diagrams, Troubleshooting & Component Locations.*

- DTC table, ⇒ Page 01-29 under DTC 65535
- Press → key.

Rapid data transfer HELP
Select function ⮜ Indicated on display:

After the HELP key is pressed, a list of the possible functions is printed out.

01-26

List of selectable functions

		Page
01 -	Read TCM version ⇒ On Board Diagnostic (OBD) program	⇒ Page 01-22
02 -	Read DTC Memory	⇒ Page 01-27
04 -	Initiate basic setting	⇒ Page 01-44
05 -	Erase DTC Memory	⇒ Page 01-42
06 -	End output	
08 -	Read measured value block	⇒ Page 01-46

Further functions, which can be printed out by pressing the HELP key, need not be considered.

- After reading a function the V.A.G 1551 returns to the following start position:

Rapid data transfer **HELP**

Select function

Indicated on display:

01-27

Diagnostic Trouble Code (DTC) Memory, checking

- Connect Scan Tool V.A.G 1551 and enter address word "02 Transmission electronics" and advance until "Select function XX" appears in the display ⇒ page 01 -22.

Rapid data transfer **HELP**
Select function

Indicated on display:

- Press keys O and 2. (The function "Check DTC Memory" is selected with 02).

Rapid data transfer **HELP**
02 - Check DTC Memory

Indicated on display:

- Confirm entry with key Q.

DTCs recognized!

The number of stored malfunctions or "No DTC recognized" appears in the display

The stored malfunctions are displayed in turn and printed out.

01-28

- Press → key.

- After the last malfunction has been displayed and printed out, correct the malfunctions as described in the DTC table ⇒ Page 01-29 .

- Press → key

Rapid data transfer **Select function**	**HELP**	⮜	Indicated on display: ***Note:*** *After checking the DTC Memory and correcting the malfunctions:* *- Erase DTC Memory ⇒ Page 01-42 .*

Diagnostic Trouble Code (DTC) table

Notes:

- *All the possible malfunctions which are recognized by the Transmission Control Module (TCM) -J217- and displayed on the V.A.G 1551 with the printer switched on when the DTC Memory is checked, are listed below grouped according to the DTC number.*

- *If malfunctions occur only occasionally or if the DTC Memory was not erased after correcting the malfunctions, these malfunctions will be displayed as sporadic malfunctions for a stipulated period of time. Transmission Control Module DTC recognition, ⇒ Page 01-3 .*

- *If components are indicated as being faulty during DTC Memory checking, also test wiring to the components for short and open circuits according to wiring diagram Wiring Diagrams, Troubleshooting & Component Locations , Passat 1995 ➢.*

- *The DTC is printed out in the rapid data transfer mode only when the printer of V.A.G 1551 is switched on. Example: DTC (5-position) 65535*

Readout on printer **V.A.G 1551**	
No DTC recognized!	If "No DTC recognized" appears after performing repairs, the On Board Diagnostic is completed. In the event that the automatic transmission does not operate properly despite OBD, perform repairs according to the Repair Manual. Measured value block 08 ⇒ Page 01-46

01-30

Readout on printer V.A.G 1551	Possible causes	Corrective steps
00258	Open circuit or short to Ground	- Check wiring and connections according to wiring diagram[2)]
Solenoid Valve 1 -N88-	Solenoid valve 1 -N88- faulty	- Read measured value block ⇒ Page 01-46 ; display group number 04
Open circuit[1)] Short to Ground[1)]		- Perform electrical tests ⇒ Page 01-68
00260	Open circuit or short to Ground	- Check wiring and connections according to wiring diagram[2)]
Solenoid Valve 2 -N89-	Solenoid valve 2 -N89- faulty	- Read measured value block ⇒ Page 01-46 ; display group number 04
Open circuit[1)] Short to Ground[1)]		- Perform electrical tests ⇒ Page 01-68
00262	Open circuit or short to Ground	- Check wiring and connections according to wiring diagram[2)]
Solenoid Valve 3 -N90-	Solenoid valve 3 -N90- faulty	- Read measured value block ⇒ Page 01-46 ; display group number 04
Open circuit[1)] Short to Ground[1)]		- Perform electrical tests ⇒ Page 01-68

[1)] One of these displays appears in addition to relevant component.

[2)] First check connections for contact corrosion or water ingress and replace if necessary. If solenoid malfunctions are displayed then especially check the 10-pin connector on transmission between valve body conductor strip and wiring harness.

Readout on printer V.A.G 1551	Possible causes	Corrective steps
00264	Open circuit or short to Ground	- Check wiring and connections according to wiring diagram [2)]
Solenoid Valve 4 -N91-	Solenoid valve 4 -N91- faulty	- Read measured value block ⇒ Page 01-46 ; display group number 07
Open circuit[1)] Short to Ground[1)]		- Perform electrical tests ⇒ Page 01-68
00266	Open circuit or short to Ground	- Check wiring and connections according to wiring diagram [2)]
Solenoid Valve 5 -N92-	Solenoid valve 5 -N92- faulty	- Read measured value block ⇒ Page 01-46 ; display group number 04
Open circuit[1)] Short to Ground[1)]		- Perform electrical tests ⇒ Page 01-68
00268	Open circuit or short to Ground	- Check wiring and connections according to wiring diagram [2)]
Solenoid Valve 6 -N93-	Solenoid valve 6 -N93- faulty	- Read measured value block ⇒ Page 01-46 ; display group number 02
Open circuit[1)] Short to Ground[1)]		- Perform electrical tests ⇒ Page 01-68

[1)] One of these displays appears in addition to relevant component.

[2)] First check connections for contact corrosion or water ingress and replace if necessary. If solenoid malfunctions are displayed then especially check the 10-pin connector on transmission between valve body conductor strip and wiring harness.

01-32

Readout on printer V.A.G 1551	Possible causes	Corrective steps
00270	Open circuit or short to Ground	- Check wiring and connections according to wiring diagram [2)]
Solenoid Valve 7 -N94-	Solenoid valve 7 -N94- faulty	- Read measured value block ⇒ Page 01-46 ; display group number 04
Open circuit[1)] Short to Ground[1)]		- Perform electrical tests ⇒ Page 01-68
00281	Open circuit in wiring	- Check wiring and connections according to wiring diagram [2)]
Vehicle Speed Sensor (VSS) -G68-	Vehicle Speed Sensor (VSS) -G68- faulty	- Read measured value block ⇒ Page 01-46 ; display group number 02
		- Perform electrical tests ⇒ Page 01-68
		- Replace VSS -G68- ⇒ Page 01-18 , 28
No signal	Input gear, impulse wheel loose	- Replacing input gear ⇒ Page 39-8 , Removing and installing input gear

[1)] One of these displays appears in addition to relevant component.

[2)] First check connections for contact corrosion or water ingress and replace if necessary. If solenoid malfunctions are displayed then especially check the 10-pin connector on transmission between valve body conductor strip and wiring harness.

01-33

Readout on printer V.A.G 1551	Possible causes	Corrective steps
00293	Open circuit in wiring	- Check wiring and connections according to wiring diagram [1)]
Multi-function Transmission Range (TR) Switch -F125-	Multi-function TR Switch -F125- faulty	- Read measured value block ⇒ Page 01-46 ; display group number 01
Undefined switch state		- Perform electrical tests ⇒ Page 01-68
		- Replace Multi-function TR Switch -F125- ⇒ Page 01-17 , 26

[1)] First check connections for contact corrosion or water ingress and replace if necessary.

01-34

Readout on printer V.A.G 1551	Possible causes	Corrective steps
00297	Wiring open circuit	- Check wiring and connections according to wiring diagram
Transmission Vehicle Speed Sensor (VSS) -G38-	Transmission VSS -G38- faulty	- Perform electrical check ⇒ Page 01-68
		- Replace Transmission VSS -G38- ⇒ Page 01-18 , 27
No signal		
00300	Open circuit in wiring	- Check wiring and connections according to wiring diagram [2)]
Transmission Fluid Temperature Sensor -G93- [1)]	Transmission Fluid Temperature Sensor -G93- faulty	- Read measuring value block ⇒ Page 01-46 ; display group number 05
No malfunction type recognized		- Perform electrical tests ⇒ Page 01-68

[1)] A faulty Transmission Fluid Temperature Sensor -G93- is indicated.

[2)] First check connections for contact corrosion or water ingress and replace if necessary. If solenoid malfunctions are displayed then especially check the 10-pin connector on transmission between valve body conductor strip and wiring harness.

Readout on printer V.A.G 1551	Possible causes	Corrective steps
00518	Open or short circuit	- If in addition DTC 00638 is displayed, then rectify this first
		- Check wiring and connections according to CFD
Throttle Position (TP) Sensor -G69-	Throttle Position (TP) Sensor -G69- faulty	- Read measuring value block ⇒ Page 01-46 ; display group numbers 01 and 03
		- Perform electrical tests ⇒ Page 01-68
		- Replace Throttle Position (TP) Sensor -G69- Repair Manual Fuel Injection Ignition, Repair Group 24 or 25
		- Return system to basic setting ⇒ Page 01-44
Signal outside tolerance	On vehicles with 6-Cyl. engine or Diesel engine, the TP Sensor -G69- signal is transmitted via the ECM to the TCM	- On vehicles with 6-Cyl. engine or Diesel engine, replace ECM or TP Sensor -G69- Repair Manual Fuel Injection Ignition, Repair Group 24 or 25
	ECM or TP Sensor -G69- faulty	
		- Return system to basic setting ⇒ Page 01-44

01-36

Readout on printer V.A.G 1551	Possible causes	Corrective steps
00529	Open circuit in wiring	- Check wiring and connections according to wiring diagram
Speed information missing		- Read measuring value block ⇒ Page 01-46 ; display group numbers 03
		- Check ECM Repair Manual, On Board Diagnostics, Repair Group 01 for relevant engine code
00532	Battery faulty	- Test Battery voltage ⇒ *Repair Manual, Electrical Equipment, Repair Group 27*
Supply voltage	Insufficient system voltage for valves	- Read measuring valve block ⇒ Page 01-46 ; display group number 02
		- Test supply voltage to TCM -J217-
		- Perform electrical tests ⇒ Page 01-68

Readout on printer V.A.G 1551	Possible causes	Corrective steps
00545	Open circuit or short to Ground	- Check wiring and connections according to wiring diagram
Engine/transmission electrical connection	No connection ECM/TCM	- Read measuring value block ⇒ Page 01-46 ; display group numbers 05
		- Check ECM Repair Manual On Board Diagnostics, Repair Group 01 for relevant engine code
		- Return system to basic setting ⇒ Page 01-44
00596	10-pin connector between valve body conductor strip and wiring harness	- Check wiring and connections according to wiring diagram
Short circuit between valve wiring	Conductor strip to valve body faulty	- Perform electrical tests ⇒ Page 01-68
		- Replace conductor strip ⇒ Page 38-20

[1] One of these displays appears in addition to relevant component.

Readout on printer V.A.G 1551	Possible causes	Corrective steps
00638	Open circuit or short to Ground	- Check wiring and connections according to wiring diagram
Engine/transmission electrical connection 2	No connection ECM/TCM	- Read measuring value block ⇒ Page 01-46 ; display group number 05
		- Check ECM, replace if necessary Repair Manual, On Board Diagnostics, Repair Group 01 for relevant engine code
No signal		- Return system to basic setting ⇒ Page 01-44
00641	Transmission becomes too hot, max. 148 ° C (298 ° F). If ATF temperature is too high, transmission shifts down into next lower gear.	- Check ATF level ⇒ Page 37-46 - Read measuring value block ⇒ Page 01-46 ; display group number 05; read ATF temperature
ATF temperature	Trailer load of vehicle too high	
Signal too great	ATF level not OK Transmission Fluid Temperature Sensor faulty	- Replace conductor strip ⇒ Page 38-20

Readout on printer V.A.G 1551	Possible causes	Corrective steps
00652 Gear monitoring Incorrect signal	Electrical/hydraulic malfunction Clutch or valve body faulty	- Read measuring value block ⇒ Page 01-46 ; display group number 04 and establish by driving in which gear the malfunction occurs
00660	Open circuit in wiring	- Check wiring and connections according to wiring diagram
Kick Down Switch/Throttle Position (TP) Sensor	Throttle Position (TP) Sensor -G69- faulty	- Perform repairs as described in "Corrective steps" for DTC 00518 -Throttle Position (TP) Sensor -G69-
Incorrect signal	Kick Down Switch -F8- faulty	- Read measuring value block ⇒ Page 01-46 ; display group number 01
		- Perform electrical tests ⇒ Page 01-68
		- Adjust accelerator cable or replace Repair Manual Fuel Injection Ignition, Repair Group 24

01-40

Readout on printer V.A.G 1551	Possible causes	Corrective steps
01192	Torque converter clutch slips	- Check slip of torque converter clutch
Torque converter clutch Mechanical malfunction	Valve body malfunction	- Read measured value block ⇒ Page 01-46 , Display Group No. 07
01236	Wiring break or short to Ground	- Check routing of wiring according to wiring diagram
Shift Lock Solenoid -N110- Open circuit[1)] Short to Ground[1)]	Solenoid for Shift Lock Solenoid -N110- malfunction	- Perform test step 13, ⇒ Page 01-75 - Replace Shift Lock Solenoid -N110-, Selector lever, disassembling and assembling, ⇒ Page 37-13

[1)] One of these displays appears in addition to relevant component.

01-41

Readout on printer V.A.G 1551	Possible causes	Corrective steps
65535		- Replace TCM ⇒ Page 01-7
Control Module faulty	Transmission Control Module (TCM) -J217- faulty	- Return system into basic setting ⇒ Page 01-44

Notes:

The Transmission Control Module (TCM) -J217- should not be replaced ⇒ Page 01-7 or the system be restored to the basic setting ⇒ Page 01-44 until the possible cause of the malfunction has been determined and the following malfunctions have been corrected:

- *mechanical malfunctions*
- *hydraulic malfunctions*
- *all affected electrical/electronic components and wiring connections.*

Diagnostic Trouble Code (DTC) Memory, erasing

Requirement:

- DTC Memory interrogated ⇒ Page 01-27 .

After DTC Memory has been interrogated:

Rapid data transfer **HELP**
Enter address word

Readout in display:

- Press keys 0 and 5. (The function "Erase DTC Memory" is entered with 05.)

Rapid data transfer **HELP**
05 Erase DTC Memory

Readout in display:

- Confirm entry with key Q.

Attention!
DTC Memory was not interrogated.

Readout in display:

Note:

- *If the ignition was switched off, e.g. between interrogating the DTC Memory and erasing DTC Memory, the DTC Memory will not be erased.*
- *Adhere strictly to the sequence of operations, i.e. first of all interrogate DTC Memory*

01-43

Rapid data transfer →

DTC Memory is erased!

Indicated on display:

(The DTC Memory will be erased approx. 5 secs. after the display appears.)

The DTC Memory is now erased.

Note:

Wait about 1 minute before again interrogating the DTC Memory.

System cannot be interrogated!

Indicated on display:

1 DTC recognized !

00811 3333

System cannot be interrogated

Print out with printer switched on:

TCM -J217- given no time to recognize DTCs.

- Wait about 1 minute before again interrogating the DTC Memory.
- After interrogating and erasing the DTC Memory, test drive the vehicle and again interrogate the DTC Memory.

When the DTC Memory is interrogated, the following display should appear:

"No DTC recognized!"

01-44

Basic setting, initiating

Note:

The basic setting should be initiated after performing the following repairs:

- *Exchanging engine*
- *Replacing Engine Control Module (ECM)*
- *Replacing/altering throttle valve*
- *Adjusting throttle valve (setting idling speed).*
- *Replacing Throttle Position (TP) Sensor -G69-*
- *Altering Throttle Position (TP) Sensor -G69- setting*
- *Replacing Transmission Control Module (TCM) -J217-*

- Connect Scan Tool V.A.G 1551 and enter address word "02 Transmission electronics" and advance until "Select function XX" appears in the display ⇒ Page 01-22 .

Rapid data transfer **HELP**

Select function

Indicated on display:

- Press keys 0 and 4. (The function "Initiating basic setting" is selected with 04).

01-45

Note:

Accelerator Pedal must remain in Closed Throttle Position.

Rapid data transfer **04 Basic setting**		⮜	Indicated on display: - Confirm entry with key Q.
Basic setting **Enter display group number**	**HELP**	⮜	Indicated on display: - Press keys 0 and 0. - Confirm entry with key Q.
System in basic setting	**0** →	⮜	Indicated on display: The system is now in basic setting. - Depress Accelerator Pedal as far as kickdown and hold in this position for 3 seconds. - Press key → .
Rapid data transfer **Select function**	**HELP**	⮜	Indicated on display:

Measured value block, reading

- Connect Scan Tool V.A.G 1551 and enter address word "02 Transmission electronics" and advance until "Select function XX" indicated on display ⇒ page 01 -22.

Rapid data transfer **HELP**

Select function

Indicated on display:

- Press keys 0 and 8. (The function "Read measuring value block" is selected with 08.)

Rapid data transfer

08 - Reading measured value block

Indicated on display:

- Confirm entry with key Q.

Reading measured value block

Enter display group number

Indicated on display:

- Enter display group number ⇒ Page 01-47 . List of selectable display group numbers.
- Confirm entry with key Q.

Reading measured value block **1** →

1 2 3 4

- There are always 4 display zones in the measured value block. Decoding the individual values in display zones 1 to 4. Test table ⇒ Page 01-49 .

List of selectable display group numbers

Display group No.	Display box	Designation
01	1	Selector lever position
	2	Throttle Position (TP) Sensor voltage
	3	Accelerator Pedal value
	4	Switch positions
02	1	Actual Solenoid Valve 6 -N93- voltage
	2	Specified Solenoid Valve 6 -N93- voltage
	3	Battery Positive Voltage (B+)
	4	Voltage at Vehicle Speed Sensor (VSS) -G68-
03	1	Road speed
	2	Engine speed
	3	Selected gear
	4	Accelerator Pedal value
04	1	Solenoid valves
	2	Selected gear
	3	Selector lever position
	4	Road speed
05	1	ATF temperature

	2	Switch output
	3	Gear to select
	4	Engine speed

01-48

Reading measured value block 4 →

45 ° C 0011011 0 900 rpm

Display group No.	Display box	Designation
06	1 2 3 4	not applicable
07	1 2 3 4	Selected gear Lock-up clutch slip Engine speed Accelerator Pedal value
08	1 2 3 4	not applicable

Reading measured value block 8 →

Notes:

- *If the printer is switched on, the current display is printed out on paper strip.*
- *If the specified values obtained in all the display fields:*

- Press key → .

Rapid data transfer HELP

Select function

Indicated on display:

Test table

Group No.	Dis-play box	Designation	Test conditions		Specified readout on V.A.G 1551	Corrective steps in case of deviations
01	1	Selector lever position - Multi-function Transmission Range (TR) Switch -F125-	Stationary	P	P	- Check Multi-function Transmission Range (TR) Switch -F125-, perform electrical tests, ⇒ Page 01-68
			Selector	R	R	
			lever	N	N	
			in	D	D	
				3	3	
				2	2	
				1	1	

01-50

Group No.	Dis-play box	Designation	Test conditions		Specified readout on V.A.G 1551	Corrective steps in case of deviations
01	2	Voltage of Throttle Position (TP) Sensor -G69-	Stationary	Idling min. Idling max.	0.156 V 0.8 V[1)]	When accelerating from idling to Wide Open Throttle, voltage figure increases constantly
						- Check Throttle Position (TP) Sensor Perform electrical tests, ⇒ Page 01-68
cont d				Wide Open Throttle min. Wide Open Throttle max.	3.5 V 4.680 V	- Adjusting/replacing TP Sensor Repair Manual Fuel Injection Ignition, Repair Group 24 to 25 - Return system to basic setting ⇒ Page 01-44

[2)] Engine with Mono Motronic coolant temperature min. 80 ° C (176 ° F).

Group No.	Dis-play box	Designation	Test conditions		Specified readout on V.A.G 1551	Corrective steps in case of deviations
01	3	Accelerator Pedal value	Stationary	Idling[1)]	0...1%	When accelerating from idling to Wide Open Throttle, % figure constantly increases
				Wide Open Throttle	99...100%	- Return system to basic setting ⇒ Page 01-44
	4	Switch positions				
		Brake Light Switch -F-	Brake	Operated	1	- Check Brake Light Switch -F- Perform electrical tests, ⇒ Page 01-68
				Not operated	0	
		Traction control system		Activated	1	Not applicable
cont d				Not activated	0	

1) Engine with Mono Motronic coolant temperature min. 80 ° C (176 ° F).

Group No.	Dis-play box	Designation	Test conditions		Specified readout on V.A.G 1551	Corrective steps in case of deviations
01	4		not applicable			
		Kick Down Switch -F8-	Kick-down	Operated	1	- Check Kick Down Switch -F8- Perform electrical tests, ⇒ Page 01-68
				Not operated	0	
		Multi- function TR Switch -F125-	Selector lever in	R, N, D, 3, 2	1	- Check Multi-function TR Switch -F125- Perform electrical tests, ⇒ Page 01-68
				P, 1	0	
			Selector lever in	P, R, 2, 1	1	
				N, D, 3	0	

Group No.	Dis-play box	Designation	Test conditions		Specified readout on V.A.G 1551	Corrective steps in case of deviations
01	4	Multi- function TR Switch -F125-	Selector lever in	P, R, N, D	1	- Check Multi-function TR Switch -F125- Perform electrical tests, ⇒ Page 01-68
				3, 2, 1	0	
			Selector lever in	P, R, N	1	
				D, 3, 2, 1	0	

01-54

Group No.	Dis-play box	Designation	Test conditions		Specified readout on V.A.G 1551	Corrective steps in case of deviations
02	1	Actual current of Solenoid Valve 6 -N93-	Stationary	Wide Open Throttle	0.0 A	- Check Solenoid Valve -N93- Perform electrical tests, ⇒ Page 01-68
				Idling max.	1.1 A	
	2	Specified current of Solenoid Valve 6 -N93-	Stationary	Wide Open Throttle	0.0 A	
				Idling max.	1.1 A	
	3	Battery Positive Voltage (B+)	Stationary	min.	10.8 V	- Check battery, replace if necessary
						- Check voltage supply to TCM -J217- Perform electrical tests, ⇒ Page 01-68
				max.	16.0 V	- Replace TCM -J217- ⇒ Page 01-7
cont d						- Return system to basic setting ⇒ Page 01-44

01-55

Group No.	Dis-play box	Designation	Test conditions		Specified readout on V.A.G 1551	Corrective steps in case of deviations
02	4	Vehicle Speed Sensor (VSS) -G68-	Stationary	min.	2.20 V	- Check VSS -G68- Perform electrical tests, ⇒ Page 01-68
				max.	2.52 V	
03	1	Vehicle speed	Driving[1)]		...km/h	Speedometer reading and readout on V.A.G 1551 may differ slightly.
cont d	2	Engine speed	With engine running		rpm	- Tune engine if necessary Repair Manual, Fuel Injection Ignition, Repair Group 24 or 25

[1)] When driving, a second technician is needed for reading the specified values.

Group No.	Dis-play box	Designation	Test conditions		Specified readout on V.A.G 1551	Corrective steps in case of deviations
03	3	Gear selected	Driving[1)]	Neutral	0	- Check solenoid valves Perform electrical tests, ⇒ Page 01-68
				Reverse	R	
				1 hydraulic	1	
				2 hydraulic	2H	
				2 mechanical	2M	
				3 hydraulic	3 H	
				3 mechanical	3M	
				4 hydraulic	4H	
				4 mechanical	4	
	4	Accelerator Pedal value	Driving[2)]	Idling	0...1%	When accelerating from idling to Wide Open Throttle, % figure constantly increases
				Wide Open Throttle	99...100%	- Return system to basic setting ⇒ Page 01-44

[1)] When driving, a second technician is needed for reading the specified values.

01-57

Reading measured value block display group number 04 - Checking solenoid valves while driving

- *The solenoid valves can be checked while driving with the measured value block 08, display group number 04.*
- *The table shows the Solenoid Valves -N88-, -N89-, -N90- and -N91- as controlled in each selector lever position. These solenoid valves control the shift valves to the respective gears.*
- *The Solenoid Valves -N92- and -N94- are supplementary valves which influence shifting comfort and are only controlled during gear changes and displayed in zones 5 and 6.*
- *V.A.G 1551 display box 1 has 6 characters (0000 00) and is read as follows:*

Display on	**Display Box 1:**					
V.A.G 1551	Display 1	Display 2	Display 3	Display 4	Display 5	Display 6
	Solenoid valve 1	Solenoid valve 2	Solenoid valve 3	Not applicable	Solenoid valve 5	Solenoid valve 7
1551	-N88-	-N89-	-N90-		-N92-	-N94-

- *Non-activated solenoid valves display 0 and activated solenoid valves display 1 .*

01-58

Checking solenoid valves, while driving

Note:

The check can be carried out in hydraulic or mechanical gears.

Group No.	Dis-play box	Designation	Test conditions Selector lever in:		Specified readout on V.A.G 1551		Corrective steps in case of deviations
04	1	Solenoid valves/ indicated on	**P**		1 0 1 0	00	Solenoid valves are selected according to driving condition
		V.A.G 1551 display	**R**[1)]		0 0 1 0	00	- Perform
		Solenoid Valves: 1, 2, 3, 5 and 7	**N**		1 0 1 0	00	electrical
		-N88- display 1	D[1)]	1H (1M)	0 0 1 0	00	⇒ Page 01-68
		-N89- display 2		2H (2M)	0 1 1 0	00	
		-N90- display 3 display 4 can be disregarded		3H (3M)	0 0 0 0	01	
Continued		-N92- display 5 -N94- display 6		4H (4M)	1 1 0 0	01	

[1)] When driving with gears selected a second technician is required for reading the specified values.

Group No.	Dis-play box	Designation	Test conditions Selector lever in:		Specified readout on V.A.G 1551		Corrective steps in case of deviations
04	1	Solenoid valves/ indicated on	3[1)]	1H (1M)	0 0 1 0	00	Solenoid valves are selected according to driving condition
		V.A.G 1551 display		2H (2M)	0 1 1 0	00	- Electrical check
		Solenoid Valves: 1, 2, 3, 4, 5 and 7					
		-N88- display 1		3H (3M)	0 0 0 0	00	⇒ Page 01-68
		-N89- display 2	2[1)]	1H (1M)	0 0 1 0	00	
		-N90- display 3					
		Display 4 can be disregarded		2H (2M)	0 1 1 0	00	
		-N92- display 5					
		-N94- display 6	1[1)]	1H (1M)	0 0 1 0	01	

[1)] When driving with gears selected a second technician is required for reading the specified values.

Group No.	Dis-play box	Designation	Test conditions Selector lever in:		Specified readout on V.A.G 1551	Corrective steps in case of deviations
04	2	Gear selected	Driving[1)]	Neutral	0	- Check solenoid valves, Perform electrical tests, ⇒ Page 01-68
				Reverse	R	
				1 hydraulic	1H	
				2 hydraulic	2H	
				2 mechanical	2M	
				3 hydraulic	3 H	
				3 mechanical	3M	
				4 hydraulic	4H	
cont d				4 mechanical	4M	

[1)] When driving, a second technician is needed for reading the specified values.

Group No.	Dis-play box	Designation	Test conditions	Selector lever in:	Specified readout on V.A.G 1551	Corrective steps in case of deviations
04	3	Selector lever position	Driving[1)]	P	P	- Check Multi-function TR (TR) Switch -F125-, Perform electrical tests ⇒ Page 01-68
				R	R	
				N	N	
				D	D	
				3	3	
				2	2	
cont d				1	1	

[1)] When driving, a second technician is needed for reading the specified values.

01-62

Group No.	Dis-play box	Designation	Test conditions Selector lever in:		Specified readout on V.A.G 1551	Corrective steps in case of deviations
04	4	Vehicle speed	Speed at which vehicle is driven[1)]		...km/h	The speedometer reading and readout on V.A.G 1551 may differ slightly
05	1	ATF temperature, ATF level is checked at approx. 35 ° C - 45 ° C	Stationary with engine running. The exact temperature is displayed from approx. 30 ° C		... ° C	- Check Transmission Fluid Temperature Sensor -G93-, Perform electrical check, ⇒ Page 01-68
	2	Selector outputs	Driving1) Engine management (ignition timing influence)			- Check wiring according to wiring diagram
				is switched on	1	- Replace ECM Repair Manual, Fuel Injection Ignition, Repair Group 24
				is switched off	0	- Replace TCM -J217- ⇒ Page 01-7
				switched on	1	- Return system to basic setting ⇒ Page 01-44
cont d				switched off	0	

[1)] When driving, a second technician is needed for reading the specified values.

[2)] V.A.G 1551 must always show the same number "1" or "0" in displays 1 and 2.

01-63

Group No.	Dis-play box	Designation	Test conditions Selector lever in:		Specified readout on V.A.G 1551	Corrective steps in case of deviations
05	2	Selector outputs	Shift Lock Solenoid -N110-			- Check routing of wiring per wiring diagram
				is switched on	1	- Check Shift Lock Solenoid -N110-, Perform electrical tests, ⇒ Page 01-68
				is switched off	0	
				switched on	1	
				switched off	0	
			Cruise control system			- Check routing of wiring per wiring diagram
				switched on	1	- Check cruise control system ⇒binder "Wiring Diagrams, Troubleshooting and Component Locations, Passat 1995 ➢"
cont d				switched off	0	

01-64

Group No.	Dis-play box	Designation	Test conditions Selector lever in:		Specified readout on V.A.G 1551	Corrective steps in case of deviations
05	2	Selector outputs				
			Air condi-tioner	was switched off	1	- Check routing of wiring per wiring diagram
				was not switched off	0	- Check air conditioner ⇒ *Repair Manual Heating &Air Conditioning, Repair Group 87*
			Park/Neutral signal Selector lever in			- Check routing of wiring per wiring diagram
				P, N	1	
cont d				1, 2, 3, D	0	

Group No.	Dis-play box	Designation	Test conditions Selector lever in:		Specified readout on V.A.G 1551	Corrective steps in case of deviations
05	3	Gear to select	Driving[1)]	Neutral	0	- Check solenoid valves, Perform electrical check, ⇒ Page 01-68
				Reverse	R	
				1 hydraulic	1H	- If gearshifts do not occur, a clutch or brake may be faulty
				2 hydraulic	2H	
				2 mechanical	2M	
				3 hydraulic	3 H	- Replace TCM -J217- ⇒ Page 01-7
				3 mechanical	3M	
				4 hydraulic	4H	
				4 mechanical	4M	
	4	Engine speed	Driving[1)] with engine running		rpm	- Tune engine if necessary Repair Manual, Fuel Injection Ignition, Repair Group 24 of 25

[1)] When driving, a second technician is needed for reading the specified values.

Group No.	Dis-play box	Designation	Test conditions Selector lever in:	Specified readout on V.A.G 1551	Corrective steps in case of deviations
06			not applicable		
07	1	Gear selected[1)]	Neutral	0	- Check solenoid valves, Perform electrical check, ⇒ Page 01-68
			Reverse	R	- If gearshifts do not occur, a clutch or brake may be faulty
			1 hydraulic	1H	
			1 mechanical	1M	
			2 hydraulic	2H	
			2 mechanical	2M	
			3 hydraulic	3 H	
			3 mechanical	3M	
			4 hydraulic	4H	
cont d			4 mechanical	4M	- Replace TCM -J217- ⇒ Page 01-7

[1)] When driving, a second technician is needed for reading the specified values.

Group No.	Dis- play box	Designation	Test conditions Selector lever in:		Specified readout on V.A.G 1551	Corrective steps in case of deviations
07	2	Torque converter lock-up clutch slip	While driving[1)] with engine running	In the hy- draulic gears2)	0 - stall speed	- Check wiring per wiring diagram
		Solenoid Valve 4 -N91- is activated	Torque converter lock- up clutch closed	Engine speed: 2000 ... 3000 rpm in the mechanical gears[3)]	0 - 130 rpm	- Check Solenoid Valve 4 -N91-, perform electrical check, ⇒ Page 01-68 - Check transmission page 4 - Replace torque converter
	3	Engine speed	With engine running		- rpm	- If necessary tune engine Repair Manual Fuel Injection Ignition, Repair Group 24 or 25
	4	Accelerator Pedal value		Idling	0-1%	When accelerating from idling to Wide Open Throttle the percentage value constantly increases
				Wide Open Throttle	99-100%	- Bring system into basic setting ⇒ Page 01-44
08				not applicable		

[1)] When driving, a second mechanic is needed for reading the specified values.

[2)] The torque converter lock-up clutch must be open (gears will be hydraulically activated - "H").

[3)] The gear shift must be completed. The torque converter lock-up clutch must be closed and the Accelerator Pedal value held constant (gears will be mechanically activated - "M").

01-68

Transmission: electrical test

Test conditions:

- Battery Positive Voltage (B+) OK.
- Fuses 14 and 21 OK.
- Ground (GND) connections OK.

The Ground connection point is located on the left next to the relay plate.

Check Battery Ground strap and Ground strap between Battery and transmission.

Notes:

- *Use the digital multimeter Fluke 83 with auxiliary harness from V.A.G 1594 for testing.*

CAUTION!

Select the appropriate measuring range on the multimeter before connecting the test leads to avoid damaging the electronic components.

01-69

- *The specified values are valid for ambient temperatures from 0- 40° C (32. - 104° F).*
- *If the readings obtained differ from the specified values, determine the malfunction using the wiring diagram.*
- *If the readings obtained differ only slightly from the specified values, clean sockets and connectors of the testers and test leads and repeat test. Before replacing the particular components, test wiring and connections and, particularly if specified values are below 10 Ω, repeat resistance measurements on components.*

Electrical check

Test conditions, notes ⇒ **Page 01-68**

The Transmission Control Module -J217- is located under the rear seat.

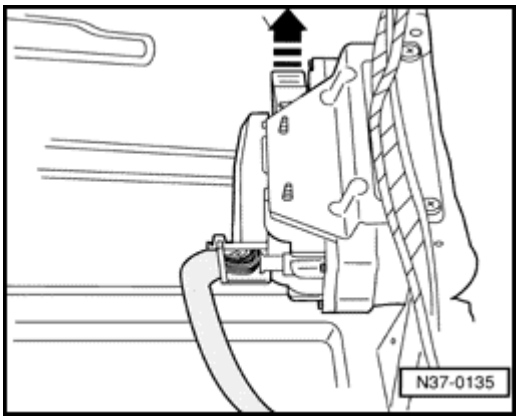

- Switch ignition off.
- Release mulit-pin connector in direction of arrow and disconnect from control module.

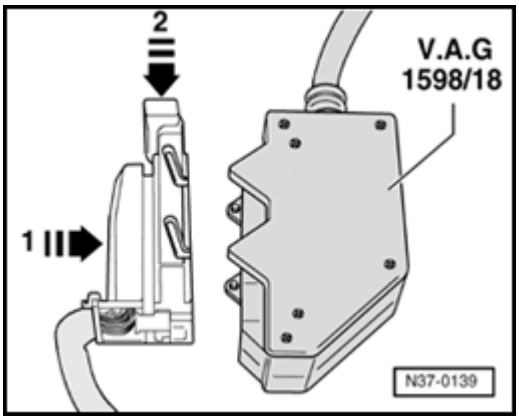

- Install test box V.A.G 1598/18 onto multi-pin connector (1) and lock, in direction of arrow (2).

Using test box V.A.G 1598/18 the wiring can be checked according to wiring diagram.

01-71

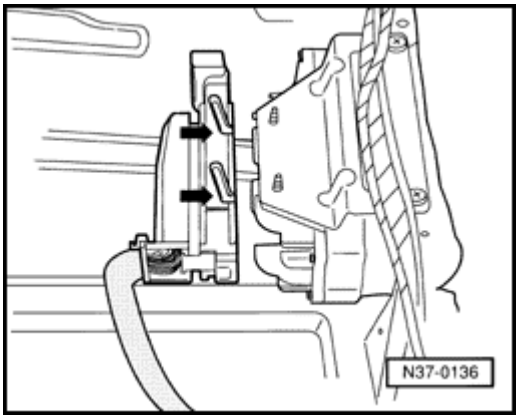

After electrical checks:

- Connect multi-pin connector to Transmission Control Module (TCM) -J217- and lock.

Note:

When connecting ensure that the guides (arrows) are engaged on TCM pins.

01-72

Transmission Control Module (TCM) - 217- 68-pin connector assignment (on V.A.G 1598/18)

1-	Ground (terminal 31)	20-	Vehicle Speed Sensor (VSS) -G68-
2-	Vacant	21-	Transmission Vehicle Speed Sensor -G38-
3-	Vacant	22-	Solenoid Valve 6 -N93- supply B+
4-	Vacant	23-	Battery Positive Voltage (B-) (terminal 15)
5-	Throttle Position (TP) Sensor -G69- signal[1)]	24-	Diagnosis K-wire
6-	Transmission Fluid Temperature Sensor -G93-	25-	Vacant
7-	Vacant	26-	Vacant
8-	Vacant	27-	Vacant
9-	Solenoid Valve 3 -N90-	28-	Throttle Position (TP) Sensor -G69 Ground[1)]
10-	Solenoid Valve 7 -N94-	29-	Shift Lock Solenoid -N110-
11-	Park/neutral signal	30-	Vacant
12-	Kickdown for air conditioner	31-	Vacant
13-	Ignition timing influence	32-	Vacant
14-	Vacant	33-	Vacant
15-	Brake Light Switch -F- signal voltage	34-	Vacant
16-	Kick Down Switch -F8-	35-	Vacant
17-	Vacant	36-	Diagnosis L-wire
18-	Multi-function TR switch -F125-	37-	Vacant

19-	TD (revolution) signal	38-	Vacant

[1)] B+ voltage supply and signal (contacts 50, 28 + 5) not assigned no vehicles with 6-cylinder engine or Diesel engine; signal (contact 41) directed via Engine Control Module (ECM) to Transmission Control Module (TCM) and can only be checked in "Reading measured value block" ⇒ Page 01-46 .

39-	Vacant	54-	Solenoid Valve 2 -N89-
40-	Multi-function Transmission Range (TR) Switch -F125-	55-	Solenoid Valve 1 -N88-
41-	Load signal from Engine Control Module (ECM)	56-	Solenoid Valve 5 -N92-
42-	Not applicable	57-	Selector lever display
43-	Vehicle Speed Sensor (VSS) -G68 (shielding)	58-	Solenoid Valve 6 -N93-
44-	Transmission Vehicle Speed Sensor (VSS) -G38- (shielding)	59-	Vacant
45-	Battery Positive Voltage (B+) (terminal 30)	60-	Cruise control system (input terminal 15)
46-	Vacant	61-	Cruise control system (output)
47-	Solenoid Valve 4 -N91-	62-	Multi-function TR Switch -F125-
48-	Vacant	63-	Multi-function TR Switch -F125-
49-	Vacant	64-	Engine Speed (RPM) Sensor -G28- (Diesel engine)
50-	Throttle Position (TP) Sensor -G69- (5 volt)[1)]	65-	Vehicle Speed Sensor (VSS) -G68-
51-	Vacant	66-	Transmission Vehicle Speed Sensor (VSS) -G38-
52-	Vacant	67-	Solenoid valves B+ supply
53-	Vacant	68-	Terminal 30 (output)

[1)] B+ voltage supply and signal (contacts 50, 28 + 5) not assigned no vehicles with 6-cylinder engine or Diesel engine; signal (contact 41) directed via Engine Control Module (ECM) to Transmission Control Module (TCM) and can only be checked in "Reading measured value block" ⇒ Page 01-46 .

List of test steps (68 pin connector)

- Only perform test steps as listed in DTC table and reading measured value block.

Component checked		Component checked	
B+ supply voltage from Transmission Control Module (TCM) -J217-	- Perform test step Fig. 1	Solenoid Valve 5 -N92-	- Perform test step 10
Shift Lock Solenoid -N110-	- Perform test steps 2 and 13	Solenoid Valve 6 -N93-	- Perform test step 11
Brake Light Switch -F-	- Perform test step Fig. 3	Solenoid Valve 7 -N94-	- Perform test step 12
Throttle Position (TP) Sensor -G69-	- Perform test step Fig. 4	Kick Down Switch -F8-	- Perform test step 14
Multi-function Transmission Range (TR) Switch -F125-	- Perform test step Fig. 5	Transmission Fluid Temperature Sensor -G93-	- Perform test step 15
Solenoid Valve 1 -N88-	- Perform test step Fig. 6	Vehicle Speed Sensor -G68-	- Perform test step 16
Solenoid Valve 2 -N89-	- Perform test step Fig. 7	Transmission Vehicle Speed Sensor -G38-	- Perform test step 17
Solenoid Valve 3 -N90-	- Perform test step Fig. 8		
Solenoid Valve 4 -N91-	- Perform test step Fig. 9		

Test table

Switch to voltage measuring range 20 V					
Test step	**V.A.G1598/18 sockets**	**Test of**	• Test conditions - Additional operations	**Specified value**	**Correcting malfunction**
	23 + 1	B+ supply voltage from Transmission Control Module (TCM) -J217-	• Ignition switched on	approx. Battery Positive Voltage (B+)	- Check wiring per wiring diagram - Check wiring from contact 1 to Ground - Check wiring from contact 23 to terminal 15 central electric
	29 + 15	Shift Lock Solenoid -N110-	• Ignition switched on • Brake pedal not depressed	approx. Battery Positive Voltage (B+)	- Check wiring per wiring diagram
			- Brake pedal depressed	0.2 V	- Replace Shift Lock Solenoid, Servicing selector mechanism, ⇒ Page 37-1
	15 + 1	Brake Light Switch -F-	• Ignition switched on • Brake pedal not depressed	0 V	- Check wiring per wiring diagram - Replace Brake Light Switch -F-
			- Brake pedal depressed	approx. Battery Positive Voltage (B+)	⇒ *Repair Manual Suspension, Wheels, Brakes,Steering Repair Group 47 Assembly overview: Pedal cluster, brake pedal*

01-76

Switch to resistance measuring range 20 Ω						
Test step	**V.A.G1598/18 sockets**	**Test of**	• Test conditions - Additional operations		**Specified value**	**Correcting malfunction**
		Throttle Position (TP) Sensor - G69-[1]	• Ignition switched off Accelerator Pedal position:			- Check wiring per wiring diagram - The resistance measurement will constantly change when operating Accelerator Pedal from idling to Wide Open Throttle
	5 + 28			Idling min. Idling max.	0.7 kΩ 1.8 kΩ	- Adjusting Throttle Position (TP) Sensor, replace if necessary Repair Manual, Fuel Injection Ignition, Repair Group 24 or 25
				Wide Open Throttle min. Wide Open Throttle max.	2.1 kΩ 3.9 kΩ	- Return system to basic setting ⇒ Page 01-44
	5 + 50	Throttle Position (TP) Sensor - G69-[1]		Idling min. Idling max.	2.1 kΩ 3.9 kΩ	
				Wide Open Throttle min. WOT max.	0.7 kΩ 1.8 kΩ	

[1] Engine with Mono Motronic - Coolant temperature min. 80° C (176° F). Not checked on vehicles with 6-cylinder engine; signal from Throttle Position (TP) Sensor -G69- is directed via Engine Control Module (ECM) to Transmission Control Module (TCM) and can only be checked by measured value block ⇒

Page 01-46

01-77

Switch to resistance measuring range 200 Ω					
Test step	**V.A.G1598/18 sockets**	**Test of**	• Test conditions - Additional operations	**Specified value**	**Correcting malfunction**
	63 + 1	Multi-function Transmission Range (TR) Switch -F125-	- Selector lever position R, N, D, 3 and 2	infinite Ω 1)	- Check wiring per wiring diagram - Check connector on Multi-function TR Switch for contact corrosion, replace if necessary
			- Selector lever position P and 1	0.8 to 1 Ω	- replace Multi-function TR Switch -F125- ⇒ Page 01-17 , 26
	40 + 1		- Selector lever position P, R, 2 and 1	infinite Ω 1)	
			- Selector lever position N, D and 3	0 to 0.8 V	
	62 + 1		- Selector lever position P, R, N and D	infinite Ω 1)	
			- Selector lever position 3, 2 and 1	0 to 0.8 V	
	18 + 1		**Switch to voltage measuring range 20 V**		
			- Selector lever position P, R, and N	approx. battery voltage	
			- Selector lever position D, 3, 2 and 1	0 V	

1) Switch multimeter to highest Ω range.

01-78

Switch to resistance measuring range 200 Ω					
Test step	**V.A.G1598/18 sockets**	**Test of**	• Test conditions - Additional operations	**Specified value**	**Correcting malfunction**
	55 + 67	Solenoid Valve 1 -N88-	• Ignition switched off	55 to 65 Ω	- Check routing of wiring per wiring diagram
	55 + 1			infinite Ω 1)	- replace conductor strip or valve body ⇒ Page 38-20
	54 + 67	Solenoid Valve 2 -N89-	• Ignition switched off	55 to 65 Ω	- Check routing of wiring per wiring diagram
	54 + 1			infinite Ω 1)	- Replace conductor strip or valve body ⇒ Page 38-20
	9 + 67	Solenoid Valve 3 -N90-	• Ignition switched off	55 to 65 Ω	- Check routing of wiring per wiring diagram
	9 + 1			infinite Ω 1)	- Replace conductor strip or valve body ⇒ Page 38-20
	47 + 67	Solenoid Valve 4 -N91-	• Ignition switched off	4.5 to 6.5 Ω	- Check routing of wiring per wiring diagram
	47 + 1			infinite Ω 1)	- Replace conductor strip or valve body ⇒ Page 38-20

1) Switch multimeter to highest Ω range.

01-79

Switch to resistance measuring range 200 Ω					
Test step	**V.A.G1598/18 sockets**	**Test of**	• Test conditions - Additional operations	**Specified value**	**Correcting malfunction**
	56 + 67	Solenoid Valve 5 - N92-	• Ignition switched off	55 to 65 Ω	- Check routing of wiring per wiring diagram
	56 + 1			infinite Ω [1]	- replace conductor strip or valve body ⇒ Page 38-20
	58 + 22	Solenoid Valve 6 - N93-	• Ignition switched off	4.5 to 6.5 Ω	- Check routing of wiring per wiring diagram
	58 + 1			infinite Ω [1]	- Replace conductor strip or valve body ⇒ Page 38-20
	22 + 1			Ω [1]	
	10 + 67	Solenoid Valve 7 - N94-	• Ignition switched off	55 to 65 Ω	- Check routing of wiring per wiring diagram
	10 + 1			infinite Ω [1]	- Replace conductor strip or valve body ⇒ Page 38-20
	23 + 29	Shift Lock Solenoid - N110-	• Ignition switched off	14 to 25 Ω	- Check routing of wiring per wiring diagram
					- Replace Shift Lock Solenoid -N110- Servicing selector mechanism, ⇒ Page 37-1

[1] Switch multimeter to highest Ω range.

01-80

Switch to resistance measuring range 200 Ω					
Test step	**V.A.G1598/18 sockets**	**Test of**	• Test conditions - Additional operations	**Specified value**	**Correcting malfunction**
	1 + 16	Kick Down Switch - F8-	• Ignition switched off	infinite Ω [1]	- Check routing of wiring per wiring diagram
			• Accelerator Pedal not depressed		- Adjust accelerator cable or replace Repair Manual, Engine Mechanical, Repair Group 20
			- Depress Accelerator Pedal as far as kick-down	less than 1.5 Ω	

[1] Switch multimeter to highest Ω range.

01-81

Switch to resistance measuring range 2 MΩ					
Test step	**V.A.G1598/18 sockets**	**Test of**	• Test conditions - Additional operations	**Specified value**	**Correcting malfunction**
	6 + 67	Transmission Fluid Temperature Sensor -G93-	• Ignition switched off	Ω	- Check wiring per wiring diagram - Replace conductor strip or valve body ⇒ Page 38-20
			• ATF temperature approx. 20 °C	0.247 MΩ	
			- Switch digital multimeter Fluke 83 to 200 KΩ approx. 60 °C approx. 120 °C	48.8 KΩ 7.4 KΩ	

01-82

Switch to resistance measuring range 20 K Ω					
Test step	**V.A.G1598/18 sockets**	**Test of**	• Test conditions - Additional operations	**Specified value**	**Correcting malfunction**
	20 + 65	Vehicle Speed Sensor (VSS) -G68-	• Ignition switched off		- Check wiring per wiring diagram
			min.	0.8 KΩ	- Replace Vehicle Speed Sensor (VSS) -G68- ⇒ Page 01-18 , Fig. 11
			max.	0.9 KΩ	
	21 + 68	Transmission Vehicle Speed Sensor (VSS) -G38-	• Ignition switched off		- Check wiring per wiring diagram
			min.	0.8 KΩ	- Replace Transmission Vehicle Speed Sensor -G38- ⇒ Page 01-18 , Fig. 11
			max.	0.9 KΩ	

Torque converter

The torque converter is equipped with a lock-up clutch. The lock-up clutch is closed depending on vehicle load and speed; it drives 1st, 2nd, 3rd and 4th gears mechanically independent of slip.

The lock-up clutch is integrated in the torque converter.

ATF pump is driven via the torque converter.

When installing the torque converter, ensure that both drive pins engage in the recesses in the ATF pump inner wheel.

Torque converter, identification

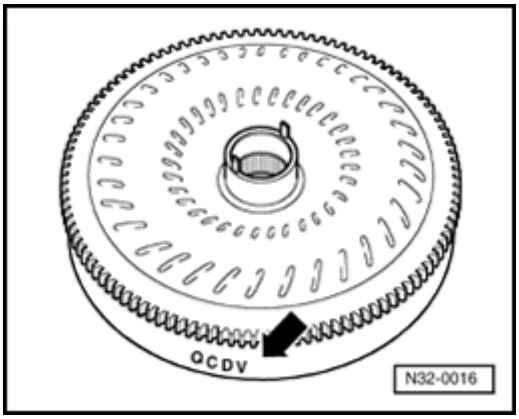

The various torque converters are identified by code letters (arrow).

Transmission/torque converter allocation ⇒ Page 00-6

32-2

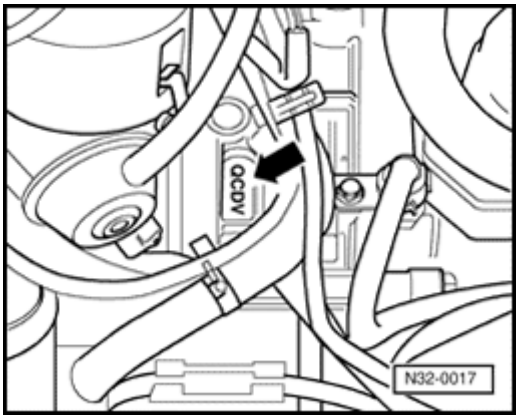

Torque converter code letters

(Transmission installed)

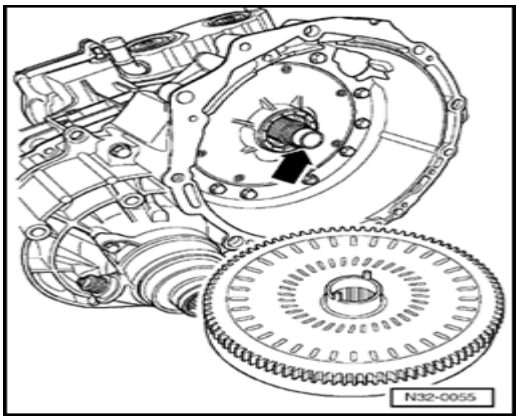

Torque converter, draining

If the torque converter has become contaminated due to wear or when performing a major overhaul of the transmission, drain the torque converter as follows:

- Extract ATF from torque converter using VAG 1358 A and probe VAG 1358 A/1 or equivalent.

Torque converter oil seal, removing and installing

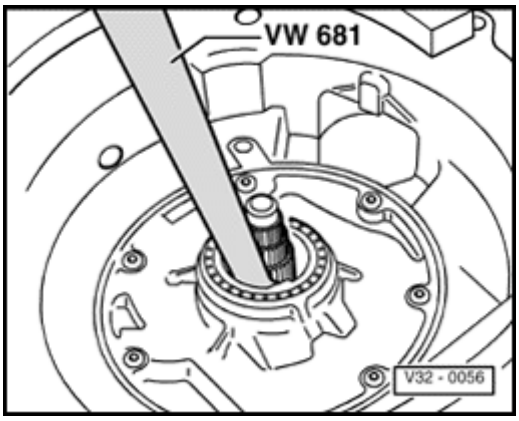

Torque converter oil seal, removing

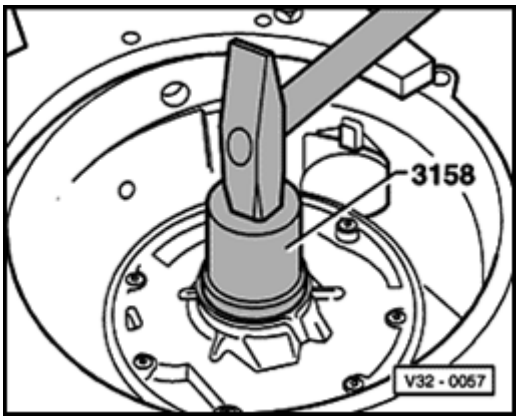

Torque converter oil seal, driving in until flush

Torque converter

The ATF pump is driven by the torque converter.

When fitting the torque converter, make sure that two drive pins engage into the recesses in the inner wheel of the ATF pump.

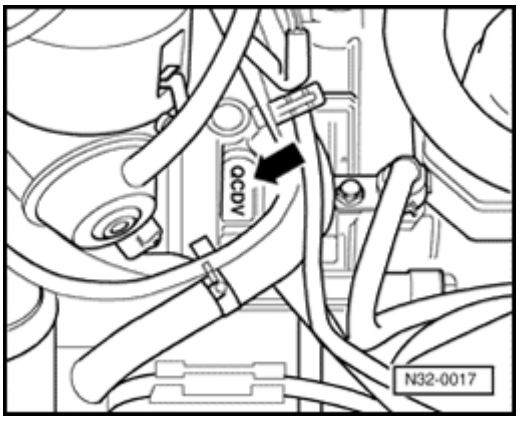

Torque converters come in different types. An arrow pointing to a letter indicates the type.

(transmission installed)

Torque converter marking

Torque converters come in different types.

Older torque converters have a plain bearing in the transmission turbine shaft.

New torque converters have an integral needle bearing.

A letter is used to indicate the type of torque converter.

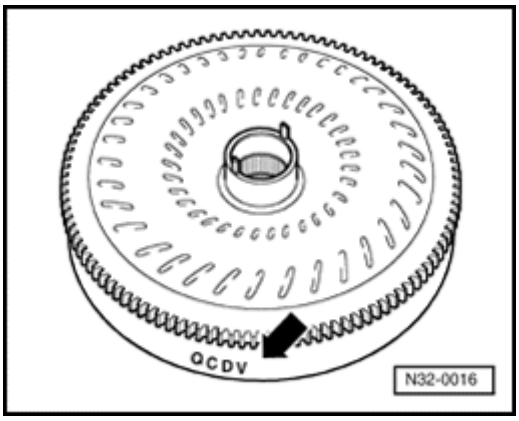

Older torque converters may only be fitted to transmissiones that have a plain bearing in the turbine shaft. The fourth letter (B, C, R, T or V) is used to identify the correct type of converter.

32-5

Example (arrow) is a "V".

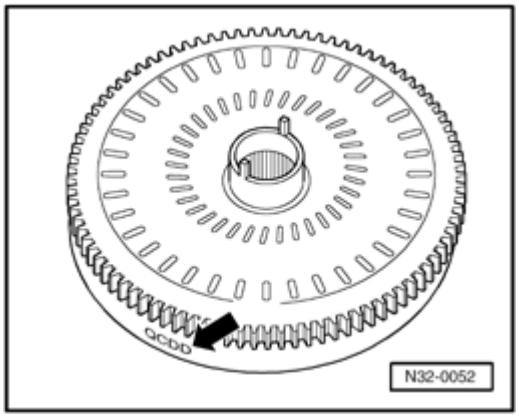

- New torque converters may only be installed to transmissions with no plain bearing in the turbine shaft. The fourth letter (D, H or J) is used to identify the correct type of converter.

Example (arrow) is a "D"

Note:

If a new torque converter with an integral needle bearing is to be installed in a transmission with a plain bearing in the turbine shaft, the plain bearing must be removed.

Allocation of torque converter

There are two versions that are allocated according to transmission letter (see page 1).

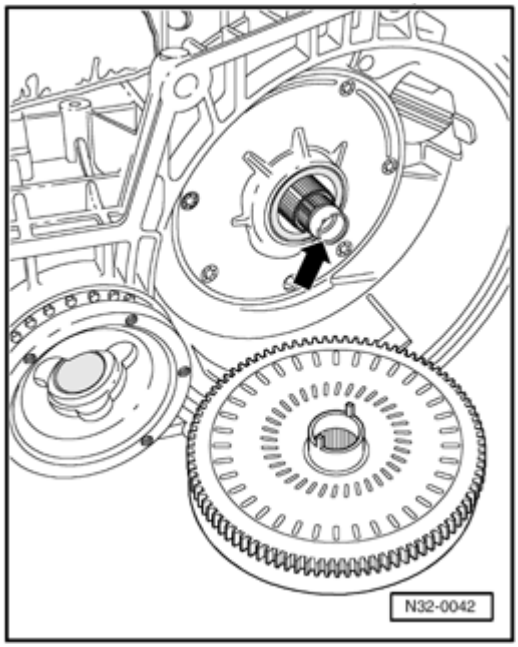

- Older torque converters with a plain bearing in the transmission turbine shaft (arrow).

New torque converters with an integral needle bearing. With this type, there must be no plain bearing (arrow) in the transmission turbine shaft or, if there is, it should be removed.

32-6

Removing plain bearing from turbine shaft

Place the transmission on its oil sump in the installation position.

- Remove the torque converter

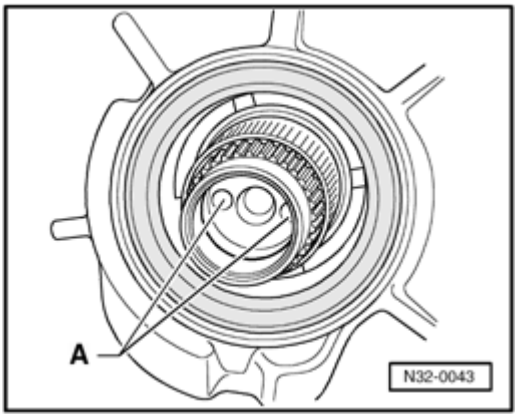

- Position the tapped holes A of the turbine shaft so they are horizontal.

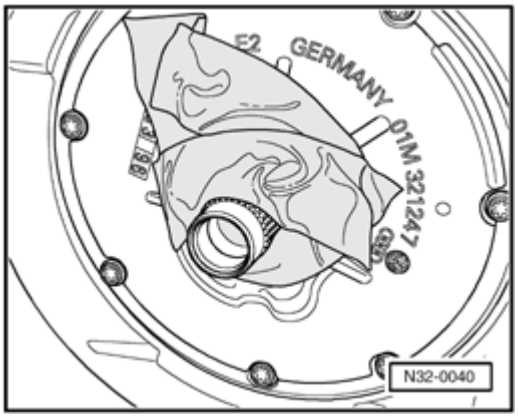

- Protect the transmission by carefully covering the turbine shaft and tapped holes with adhesive tape.

32-7

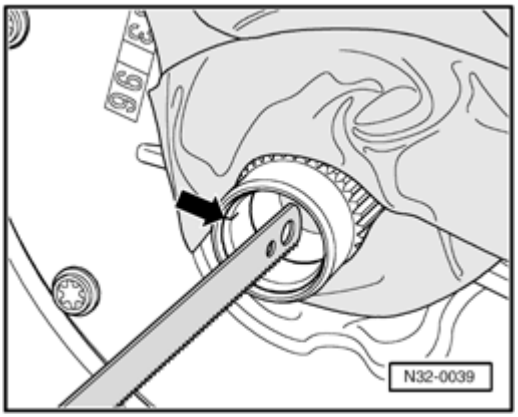

- Using a saw blade, saw off the plain bearing. Do not place the saw blade in the gap (arrow) in the plain bearing.
- Make sure no chips enter the transmission.

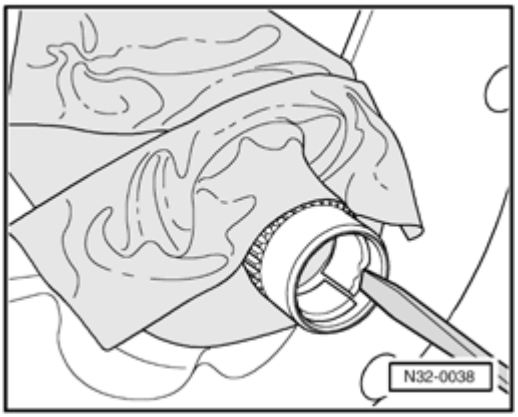

- Using a screwdriver, gently raise the sawn-off plain bearing, taking care not to damage the turbine shaft.
- Remove any chips and the adhesive tape.

Replace the sealing ring for the torque converter ⇒ Page 32-3

Selector mechanism, servicing

CAUTION!

Before working on the engine when it is running, move the transmission selector lever into the P position and apply the parking brake.

Checking operation

- Shift selector lever into "P" position and switch ignition on:

  - Brake pedal not depressed:

    Selector lever is locked and cannot be shifted out of " P" position. Shift Lock Solenoid -N110- blocks selector lever.

  - Brake pedal depressed:

    Shift Lock Solenoid -N110- releases selector lever. It is possible to shift into a driving gear.

Selector lever in N position and ignition switched on:

- Brake pedal not depressed:

  Selector lever is locked and cannot be shifted out of "N" position. Shift Lock Solenoid -N110- blocks selector lever.

- Brake pedal depressed:

  Shift Lock Solenoid -N110- releases selector lever. It is possible to shift into a driving gear.

Note

- *The starter must remain inoperable when the selector lever is in positions 1 , 2 , 3 , D and R .*

- *When travelling at speeds above 5 km/in (3 mph) and shifting into selector lever position N , Shift Lock Solenoid must not engage and block selector lever. Selector lever can be shifted into a driving gear.*

- *When travelling at speeds below 5 km/in (almost stopped) and shifting into selector lever position N , Shift Lock Solenoid must not engage until after approx. 1 sec. Selector lever cannot be shifted out of N position until brake pedal is depressed.*

37-3

Selector lever cable, checking and adjusting

Checking

- Remove selector lever cable bolt from lever/selector shaft

- Move selector lever from "P" to "1".

  - Shift mechanism and selector lever cable must move freely. If necessary replace selector lever cable or service shift mechanism.

Always replace selector lever locking washer at transmission lever after disassembling.

Adjusting

- Selector lever in "P" position.

- Loosen selector lever cable bolt on selector shaft lever.

- Bring selector shaft lever in position "P" on transmission. Locking lever must engage in park lock wheel, both front wheels locked.

- In this position tighten selector shaft lever bolt

  - Tightening torque: 25 Nm (18 ft lb)

Ignition lock, checking

- Shift selector lever to "P" position and turn ignition key to end ("OFF") position.

It must only be possible to remove ignition key with selector lever in P position.

- Remove ignition key. Selector lever cannot be shifted out of "P" position.

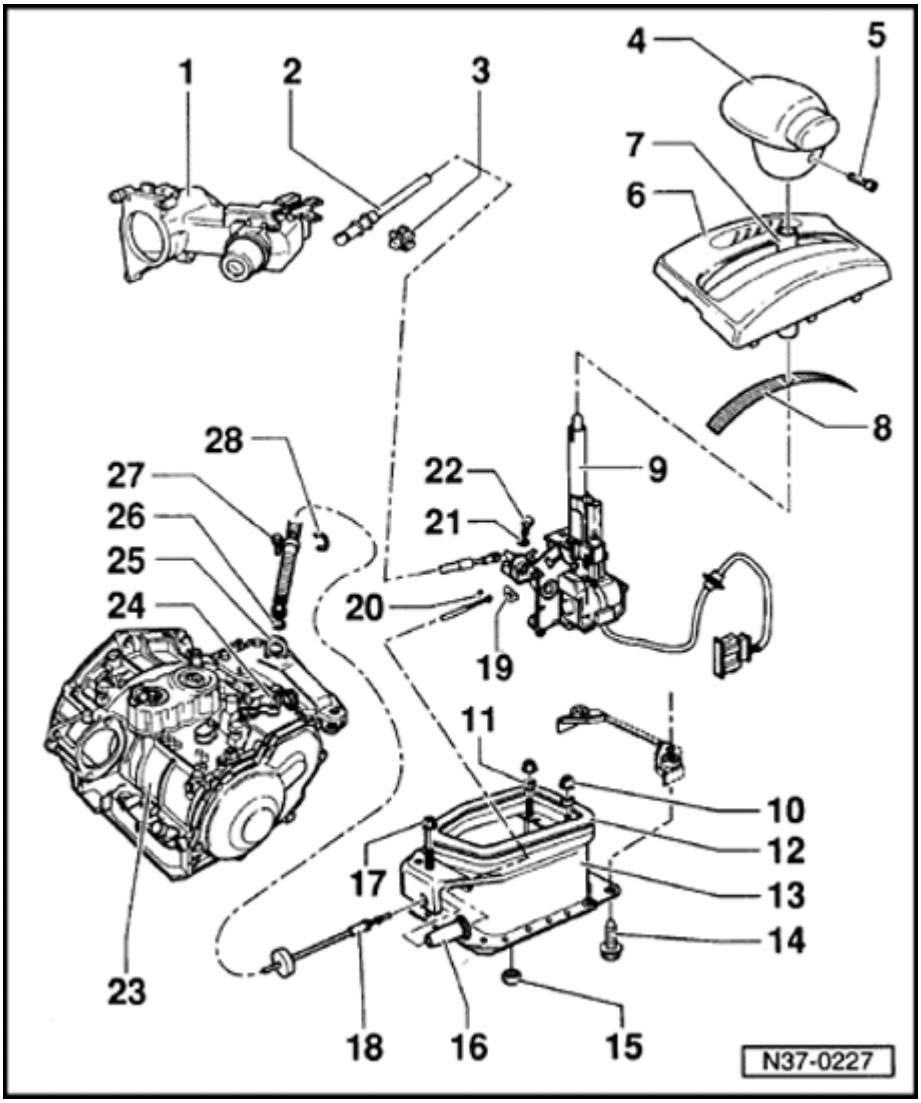

Shift mechanism, disassembling and assembling

1 - Ignition/starter switch - D

2 - Locking cable

- Must not be kinked
- Adjusting ⇒ Page 37-24
- Removing and installing ⇒ Page 37-20

3 - Clip

- For securing locking cable
- Always replace

4 - Selector lever handle

5 - Set screw

- Tightening torque: 1.5 Nm (13 in. lb)

6 - Cover

- With selector indicator

37-6

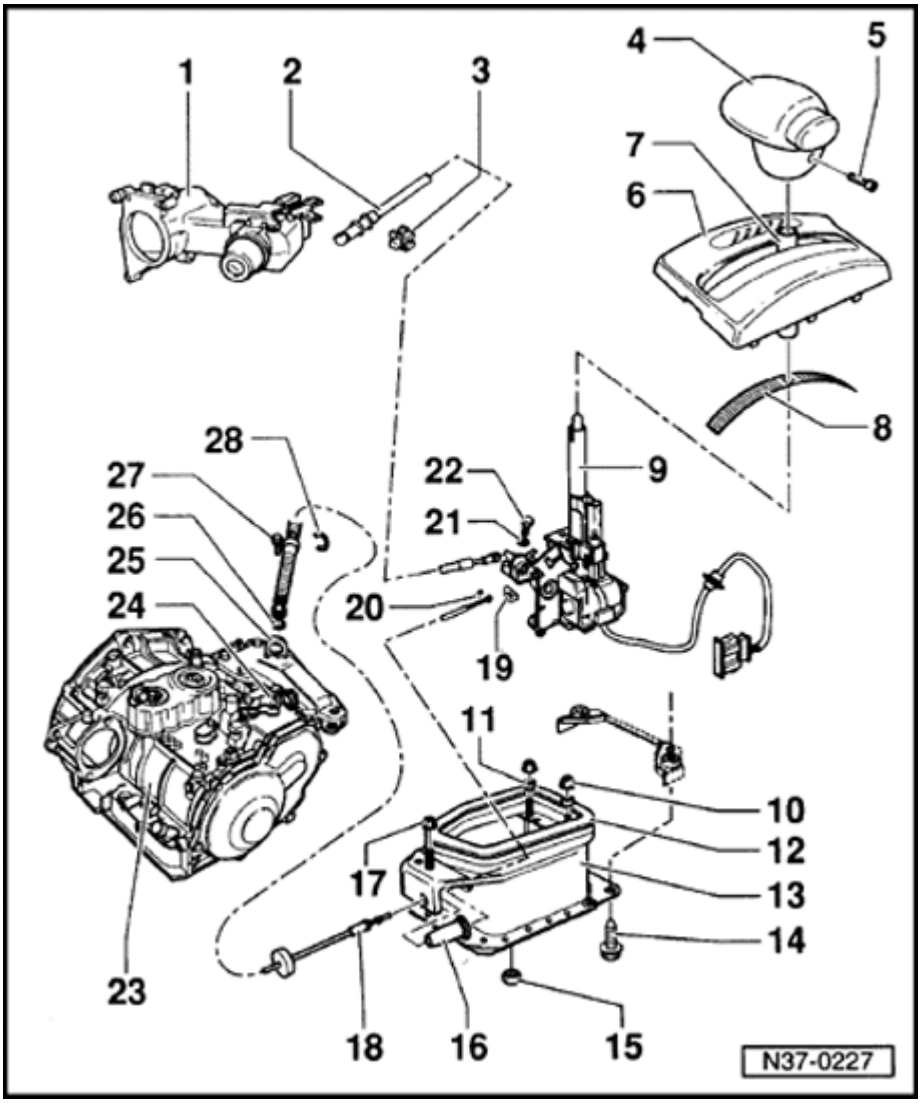

7 - Protective sleeve for selector lever

8 - Cover strip

- Insert in cover-item 6 -

9 - Selector lever

- Disassembling and assembling ⇒ Page 37-13
- To remove selector lever, remove lower protective plate, remove front protective plate and push forward.
- When installing selector lever, insert locking cable anchorage in notch of selector lever housing.
- Securing wiring harness to selector lever housing ⇒ Fig. 2

37-7

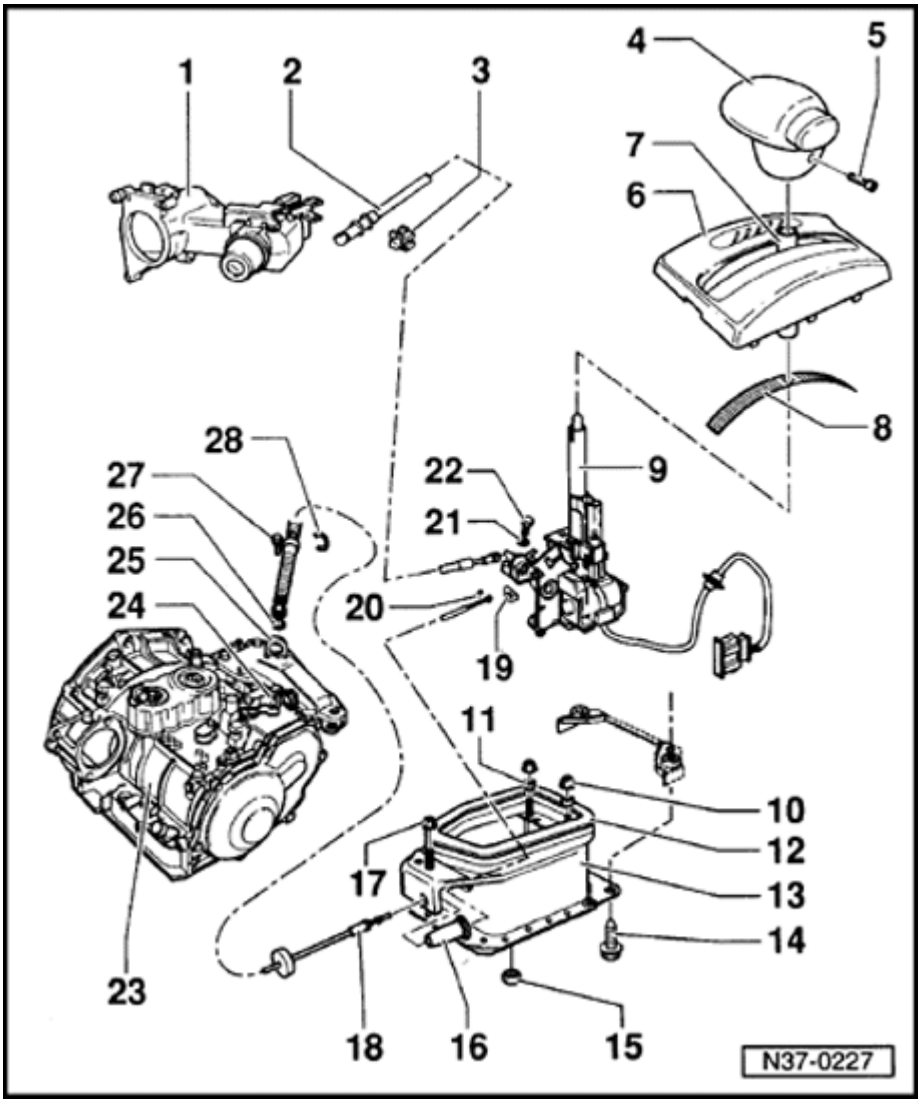

10 - Nuts

- To secure central console

11 - Spacer

12 - Gasket

- Always replace

13 - Selector lever housing

- Need not be removed to replace selector lever cable or individual parts of shift mechanism
- Removing and installing ⇒ Fig. 1

14 - Screw

- Tightening torque: 25 Nm (18 ft lb)

15 - Nut

- Tightening torque: 15 Nm (11 ft lb)
- Always replace
- Qty 3

37-8

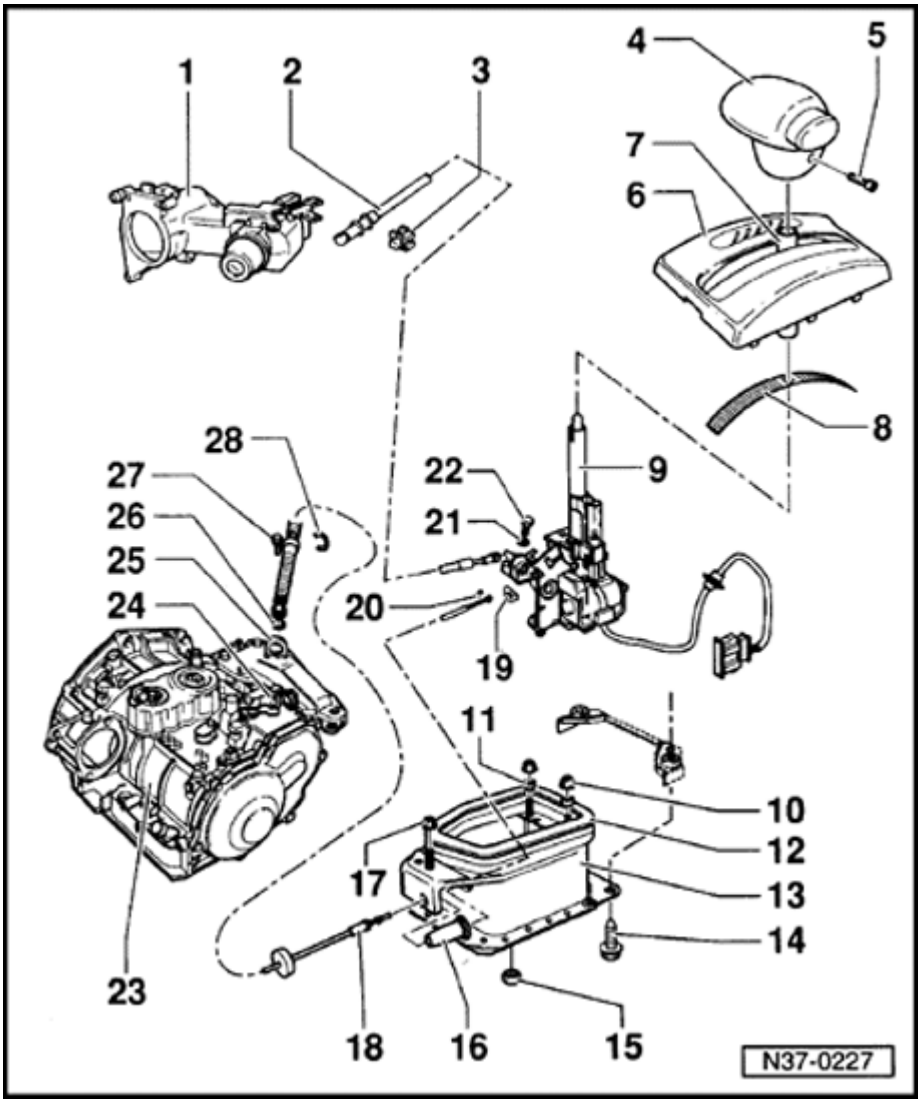

16 - Protective sleeve

- Insert into selector lever housing before attaching selector lever cable ⇒ Fig. 4

17 - Nut

- Tightening torque: 25 Nm (18 ft lb)
- With shoulder

18 - Selector lever cable

- To remove selector lever, remove lower protective plate, separate exhaust system in front of catalyst (remove catalyst on 6-Cyl. engines) and remove front protective plate.
- Do not bend or kink.
- Lightly grease cable eye and cable ends before installing.
- Tighten selector lever cable on cable anchorage/selector lever housing to 20 Nm (15 ft lb).

37-9

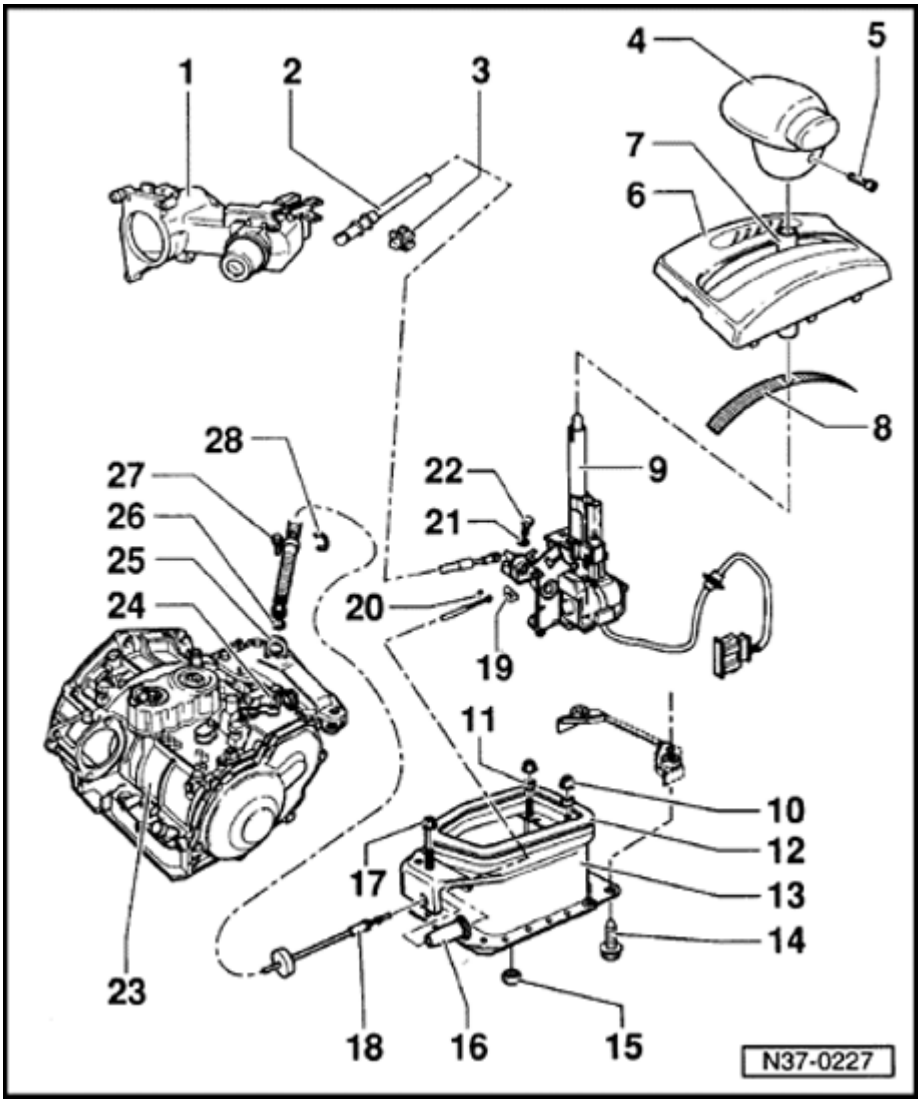

- Check guide tube for tight fit.
- Check protective sleeve between console and lever/gearshift shaft for proper seating and secure selector lever cable with corrugated locking element, -item 28 -
- Attach selector lever cable to selector lever ⇒ Fig. 3
- Adjusting ⇒ Page 37-3

19 - Seal

- Bonded to cable anchorage
- Replace if damaged

20 - Circlip

- Install after installing selector lever cable ⇒ Fig. 4

21 - Washer

22 - Bolt

- Tightening torque: 6 Nm (53 in. lb)

37-10

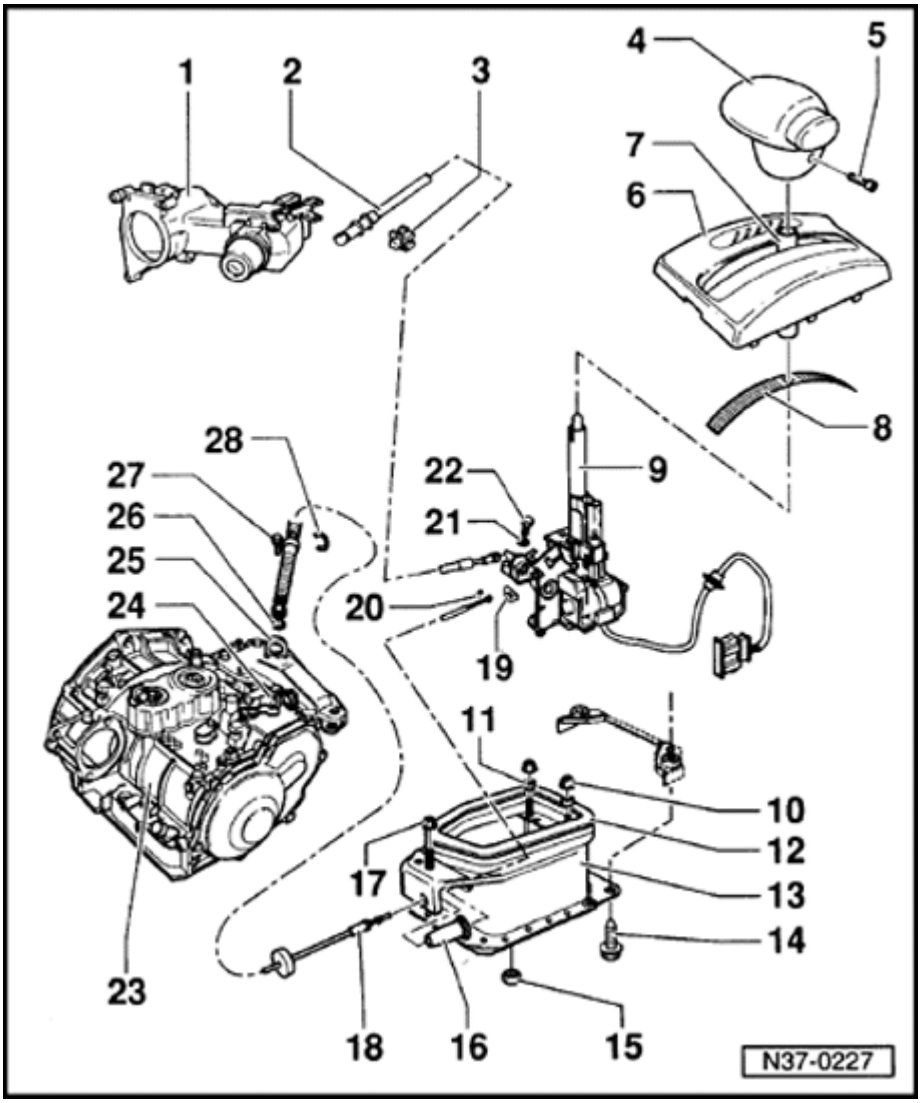

23 - Transmission

24 - Lever

- For selector shaft

25 - Console

- With cable anchorage for selector lever cable

26 - Washer

27 - Bolt

- Tightening torque: 25 Nm (18 ft lb)

28 - Corrugated locking element

- For selector lever cable
- Always replace

37-11

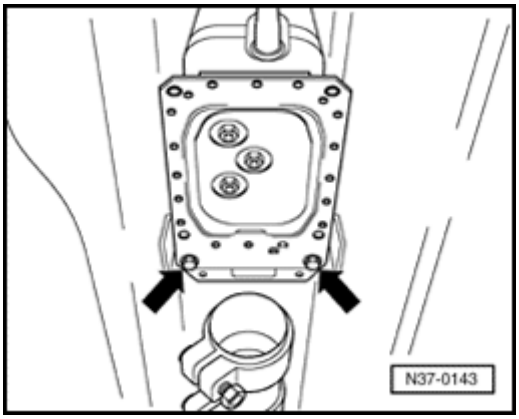

Fig. 1 Selector lever housing, removing and installing

- Remove rear central console.
- Remove hex nut.
- Remove lower protective plate.
- Disconnect Oxygen Sensor connector, separate exhaust system in front of catalyst (remove catalyst on vehicles with 6-Cyl. engine).
- Remove front protective plate and rear bolts (arrows).

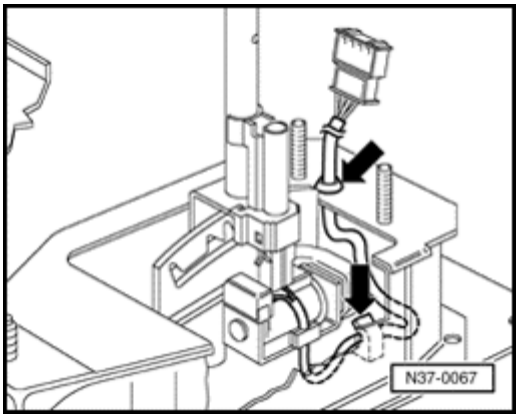

Fig. 2 Wiring harness, securing to selector lever housing

- Press harness into clips and into selector lever housing (arrows).

37-12

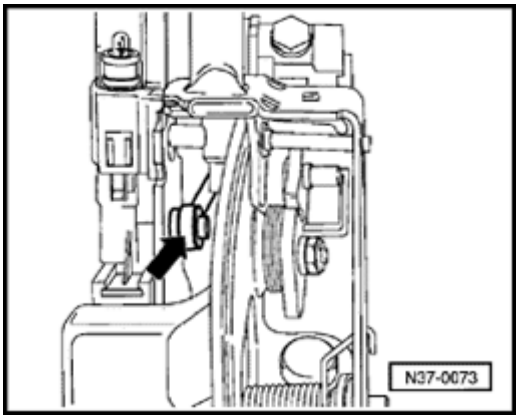

Fig. 3 Selector lever cable to selector lever, attaching

- Install selector lever cable eye (arrow) on selector lever and secure with circlip.

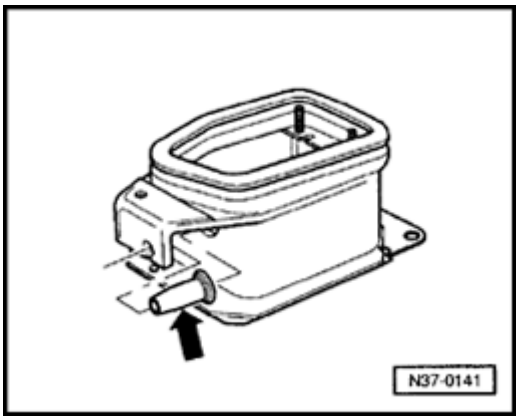

Fig. 4 Boot, inserting in selector lever housing

- Before installing the selector lever cable insert boot (arrow).

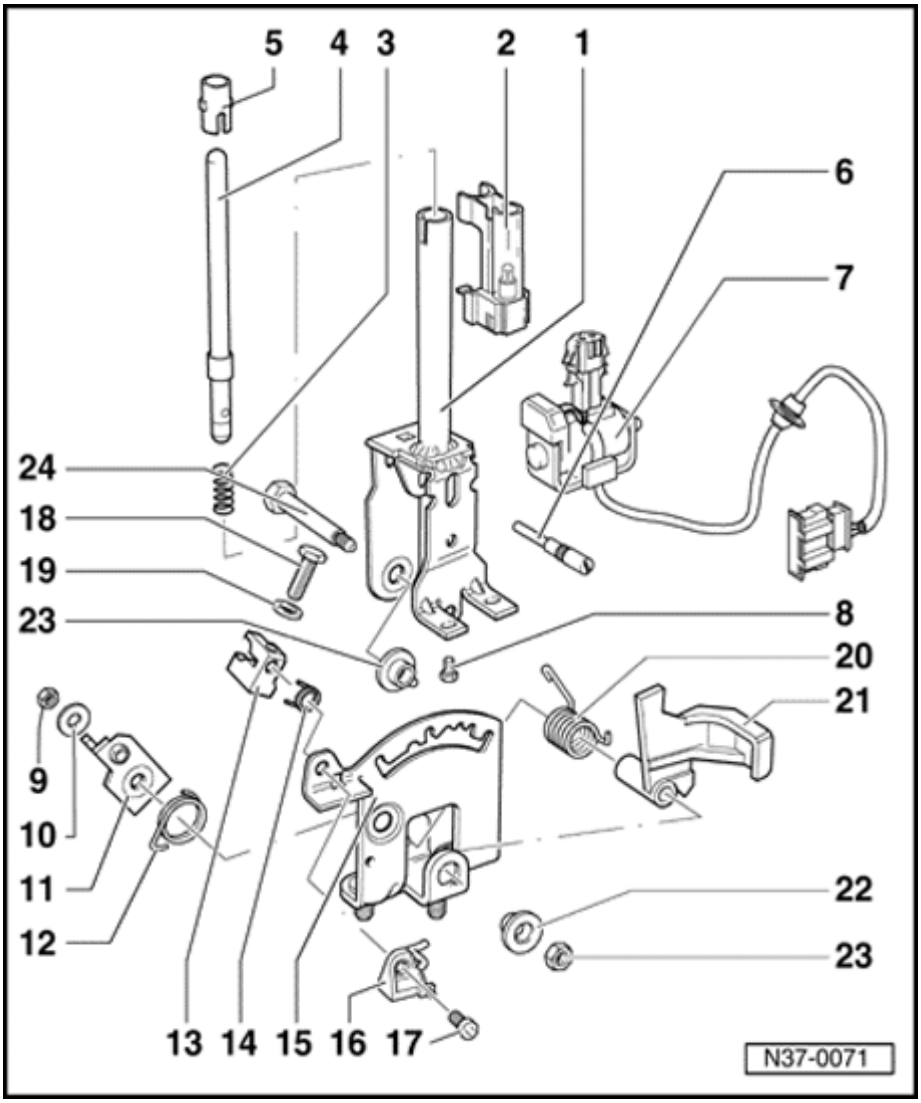

Selector lever, disassembling and assembling

Note:

Selector lever must be removed to replace individual parts ⇒ Page 37-6 .

1 - Selector lever

- Assembling ⇒ Fig. 1

2 - Indicator lighting

- Securing indicator lighting connector ⇒ Fig. 4

3 - Spring

4 - Pressure rod

- Grease in area of sliding surfaces

37-14

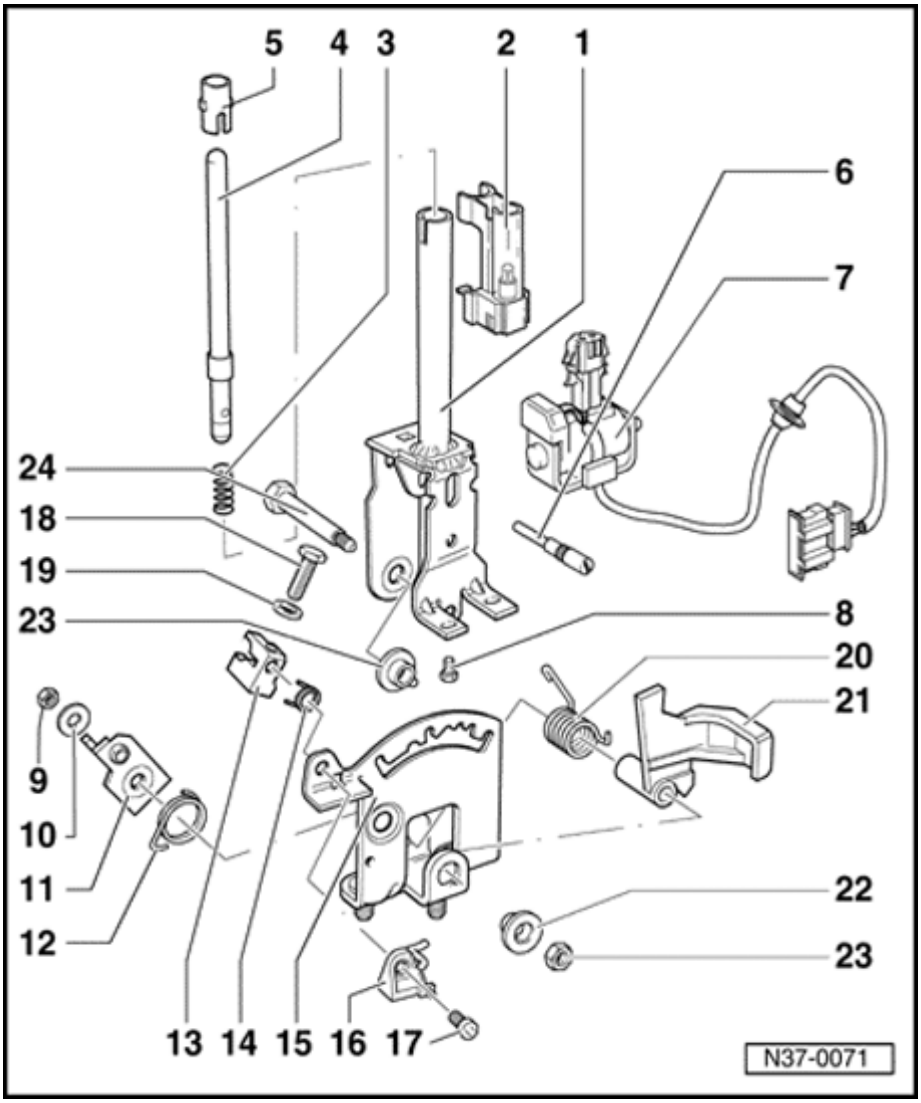

5 - Guide sleeve

- Install after installing pressure rod

6 - Set screw

- Always replace
- To remove set screw, re move Shift Lock Solenoid and lighting. Clamp set screw in vice and loosen by turning selector lever.
- Install with locking fluid AMV 185101 A1

7 - Shift Lock Solenoid - N1 10-

- Adjusting ⇒ Fig. 2
- Functional check ⇒ Fig. 3
- Can be checked using OBD in vehicle ⇒ Page 01-22

37-15

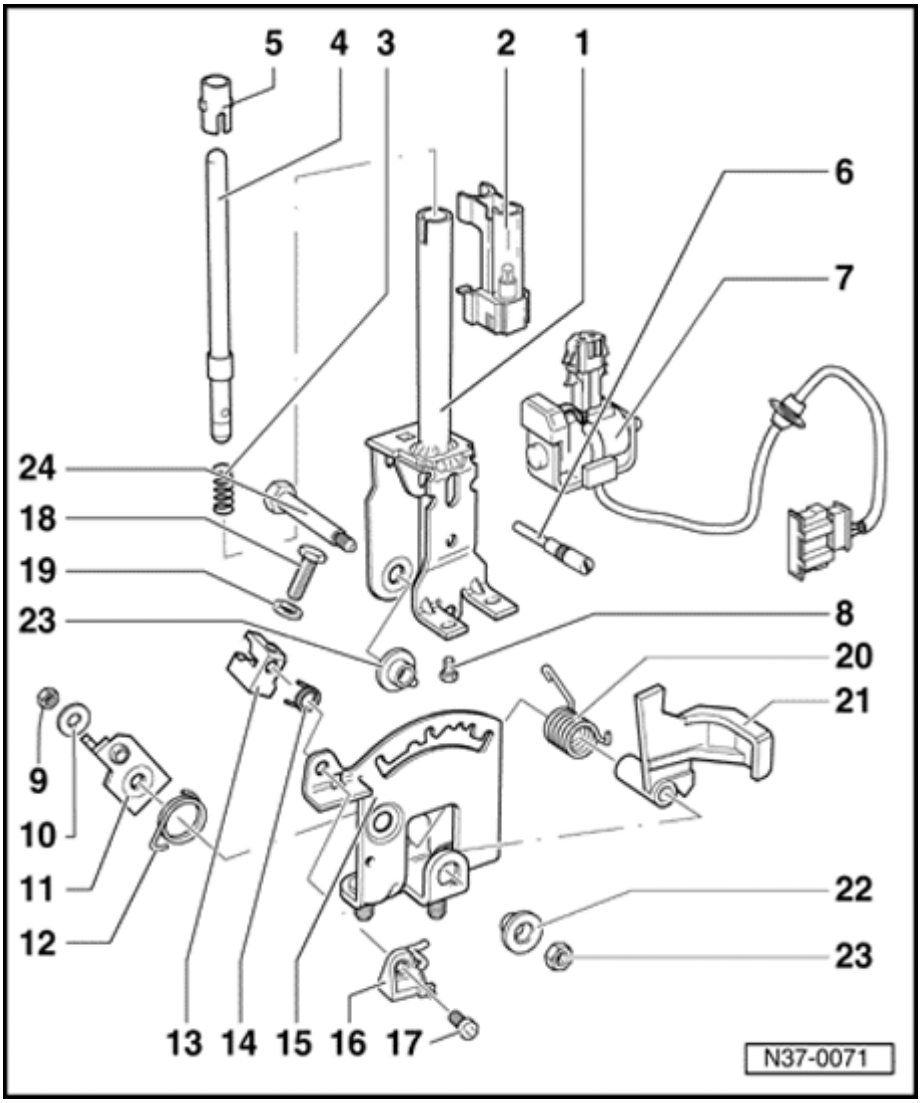

8 - Screw, 3 Nm (27 in. lb)

- Qty. 2
- Install with locking fluid AMV 185 101 A1

9 - Nut, 5 Nm (44 in. lb)

- Always replace

10 - Washer

11 - Locking lever

- For ignition key removal lock
- Adjust together with locking cable ⇒ Page 37-24

12 - Spring

- Hook into hole of detent plate

13 - Retainer

- For locking cable
- Removing and installing locking cable ⇒ Page 37-20
- Adjusting locking cable ⇒ Page 37-24

37-16

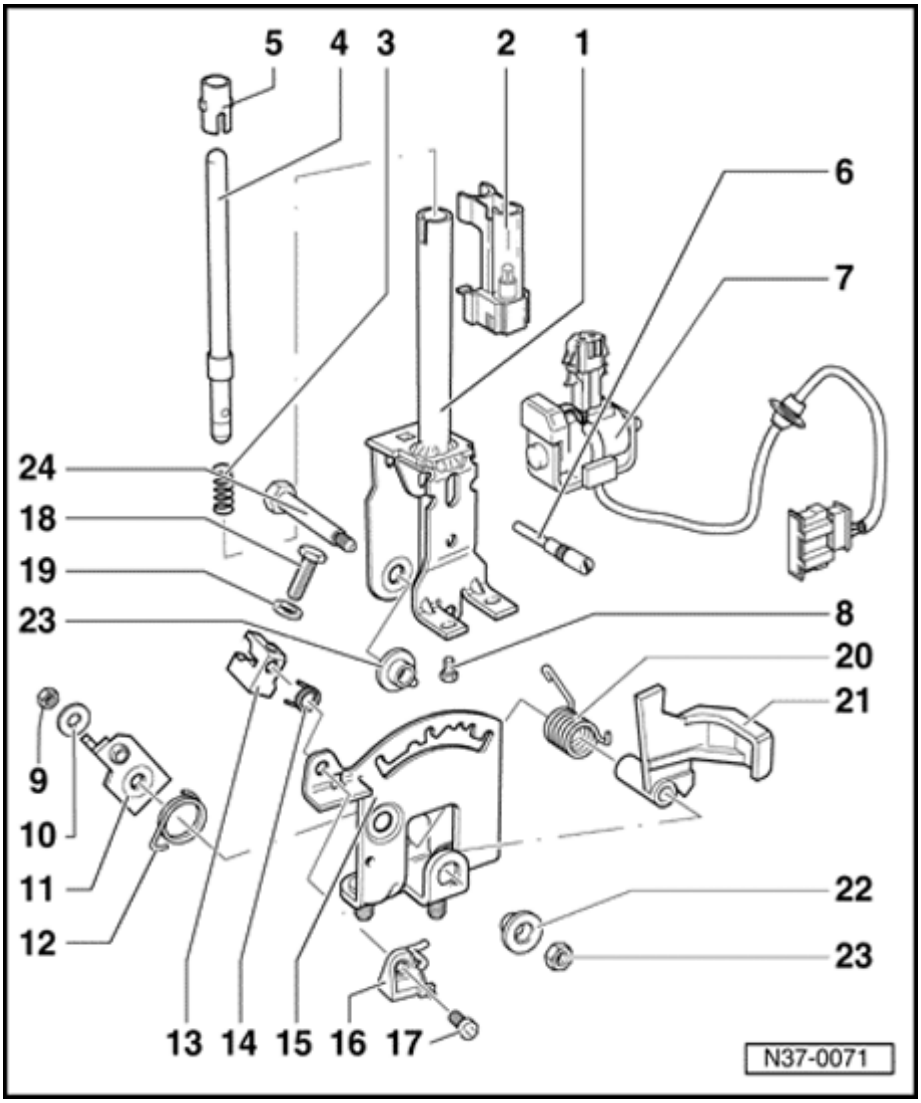

14 - Spring

- For locking pin

15 - Detent plate

- Assemble selector lever before fitting in selector lever housing ⇒ Fig. 1

16 - Locking pin

- With bracket

17 - Hex socket-head screw, 6 Nm (53 in. Lb)

18 - Screw, 6 Nm (53 in. lb)

19 - Washer

20 - Spring

- Insert in selector lever together with lever - Item 21 -

37-17

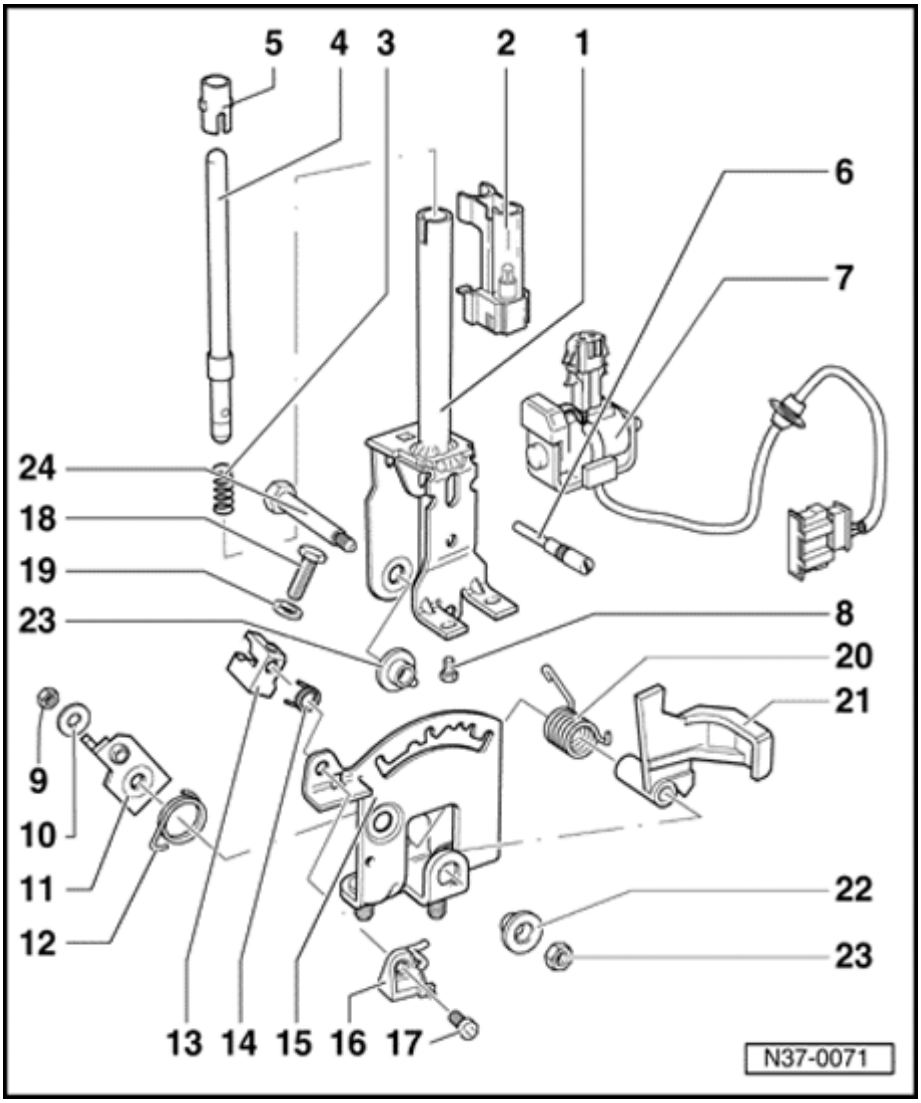

21 - Lever

- For locking in selector lever position "N" or "P"
- Adjusting ⇒ Fig. 2

22 - Bushing

23 - Nut, 10 Nm (7 ft lb)

- Always replace

24 - Bolt

- Grease shank

37-18

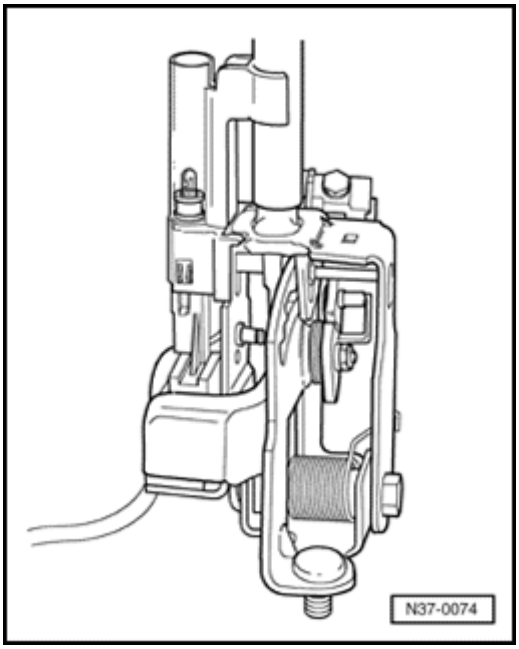

Fig. 1 Selector lever, assembling before installing

Adjust Shift Lock Solenoid -N110- and carry out functional check ⇒ Fig. 3 before installing selector lever in selector lever housing.

- Install set screw and Shift Lock Solenoid -N110- screws with locking fluid AMV 185 101 A1.

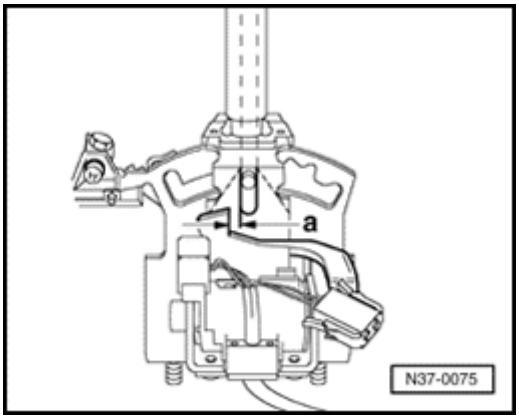

Fig. 2 Shift Lock Solenoid -N110-, adjusting

- Adjust solenoid by sliding in elongated holes so that clearance -a- of 0.3 mm exists between pressure rod and lever ⇒ Fig. 3 .

37-19

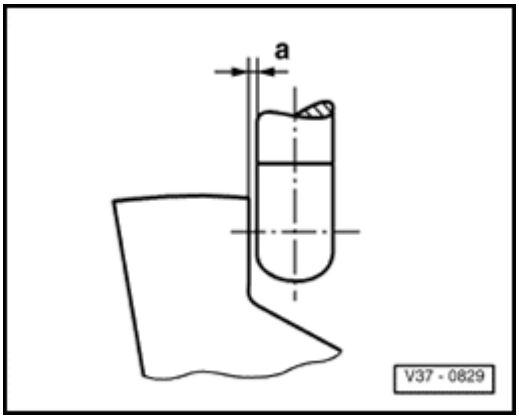

Fig. 3 Clearance between pressure rod and lever, adjusting

Dimension a = 0.3 mm

Functional check

- Shift selector lever into "P" and supply solenoid with 12 V. It must not be possible to shift selector lever into a driving gear
  - Interrupt solenoid operation; it must be possible to shift into driving gears.

  Pressure rod must not catch on lever.
- Shift selector lever into "N" and check as in "P".
- After adjusting clearance, install assembled selector lever.

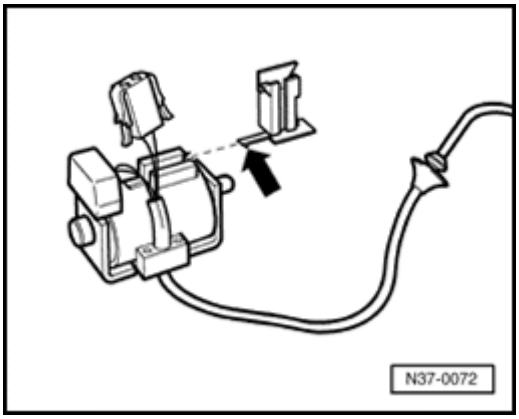

Fig. 4 Indicator lighting connector, securing

- Push bracket with lug (arrow) on until lug engages.
- Seat connector cable into bracket and slide connector onto bracket.

Locking cable, removing and installing

Notes:

- *Locking cable must not be kinked.*
- *Adjust locking cable after installing* ⇒ *Page 37-24* .

Removing

- Remove selector lever handle.
- Remove cover with cover strip.
- Remove central console.

⇒ *Repair Manual Body Exterior, Interior, Repair Group 70.*

- Loosen cable anchorage screw, take locking cable out of locking lever and pull out of cable anchorage.

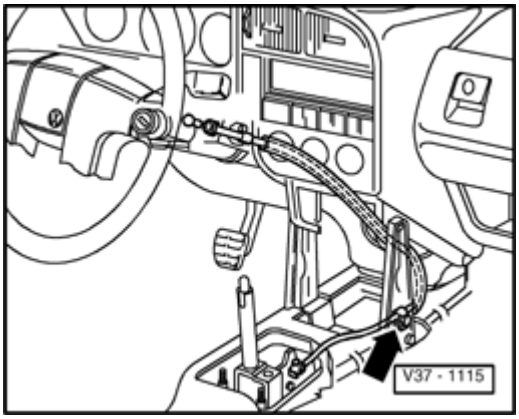

- Remove locking cable from clip (arrow).
- Remove trim pieces from Ignition/Starter switch.
- Press locking cable clip out of Ignition/Starter switch and remove locking cable from ball head.
- Remove locking cable.

37-21

Installing

Note:

Ensure proper routing of locking cable when installing.

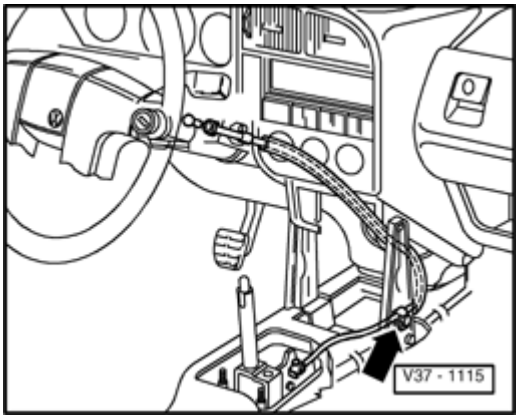

- Install locking cable in vehicle and insert into clip (arrow).

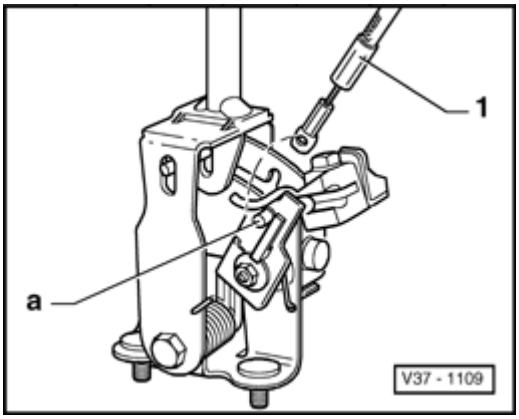

- Mount locking cable eye -1- on locking lever -a-.

37-22

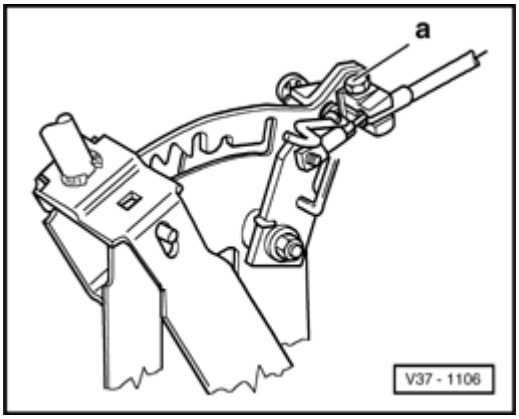

- Install locking cable in cable anchorage.

Note:

Do not tighten screw -a- until after adjusting locking cable.

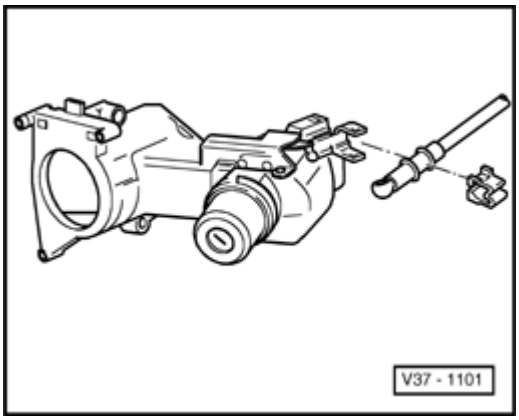

- Mount locking cable clip on locking cable first.
- Press locking cable onto ball head.
- Press locking cable with clip into support on ignition/starter switch.

37-23

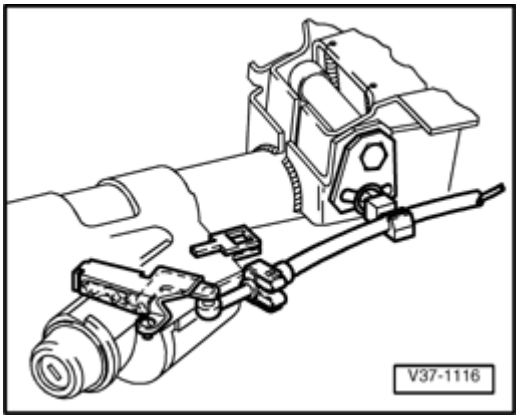

- Route locking cable along steering column.
- Adjust locking cable on cable anchorage of selector lever ⇒ Page 37-24 .
- Install central console.
- Install cover with indicator and selector lever handle.
- Install Ignition/Starter switch trim.

37-24

Locking cable, adjusting

Note:

Locking cable must always be adjusted in installation position.

- Shift selector lever into "1" position.

- Turn ignition key to right (starting position) and release.

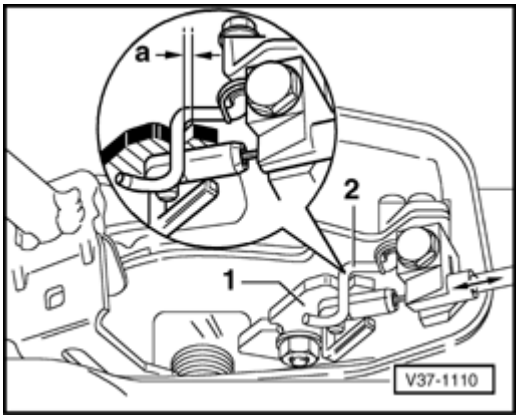

- Adjust clearance to 0.7 mm between lever -1- and locking pin -2- by sliding locking cable casing.
  - Dimension a = 0.7 mm
- Tighten locking cable anchorage screw in this position to 6 Nm (53 in lb).
- Shift selector lever into "P" position and turn ignition key to end position.
- Pull out ignition key.
  - It must only be possible to remove ignition key in this selector lever position.
  - Selector lever cannot be shifted out of "P" position.

Transmission, checking

Note:

The automatic transmission is only to be checked after having first completed the On Board Diagnostic, ⇒ Page 01-22 and the cause of damage cannot be located and corrected.

Troubleshooting 4-speed automatic transmission

Shift points, checking

⇒ Page 37-26

Stall speed, measuring

⇒ Page 37-32

Main pressure, measuring

⇒ Page 37-34

37-26

Shift points, checking

Test Requirements

- Conduct On Board Diagnostic (OBD)
  - Activate Diagnostic Trouble Code (DTC) Memory
- Check engine adjustment

Repair Manual, Fuel Injection Ignition, Repair Group 24

Transmission shifts too early or too late into the next gear

When checking the shift points note that the speedometer can deviate within the permissible tolerances from the specified value.

The charts list the shift points based on transmission code.

H = Hydraulic shifting

M = Mechanical shifting

To test the shift points, connect V.A.G 1551 Scan Tool ⇒ page 01-46 , On Board Diagnostic (OBD), Reading test value block

Shift points in km/in (mph)

Note:

During the warm up period, with hot ATF, up-hill or down-hill drives, the shift points depending on the drive situation, are automatically changed by the Control Module.

Transmission Code Letter	Shift	Kickdown km/h (mph)
CLB	1 H - 1 M	60 - 66 (37 - 41)
	1 M - 2 H	60 - 66 (37 - 41)
	2 H - 2 M	122 - 128 (76 - 80)
	2 M - 3 H	122 - 128 (76 - 80)
	3 H - 3 M	179 - 185 (111 - 115)
	3 M - 4 H	179 - 185 (111 - 115)
	4 H - 4 M	179 - 185 (111 - 115)
	4 M - 4 H	180 - 174 (112 - 108)
	4 H - 3 M	180 - 174 (112 - 108)
	3 M - 3 H	121 - 115 (75 - 71)
	3 H - 2 M	121 - 115 (75 - 71)
	2 M - 2 H	121 - 115 (75 - 71)
	2 H - 1 M	51 - 45 (32 - 28)
	1 M - 1 H	51 - 45 (32 - 28)

37-29

Transmission Code Letter	Shift	Kickdown km/h (mph)
CLK	1 H - 1 M	49 - 55 (30 - 34)
	1 M - 2 H	49 - 55 (30 - 34)
	2 H - 2 M	98 - 104 (61 - 65)
	2 M - 3 H	98 - 104 (61 - 65)
	3 H - 3 M	137 - 143 (85 - 89)
	3 M - 4 H	137 - 143 (85 - 89)
	4 H - 4 M	137 - 143 (85 - 89)
	4 M - 4 H	139 - 133 (86 - 83)
	4 H - 3 M	139 - 133 (86 - 83)
	3 M - 3 H	98 - 92 (61 - 57)
	3 H - 2 M	98 - 92 (61 - 57)
	2 M - 2 H	98 - 92 (61 - 57)
	2 H - 1 M	42 - 36 (26 - 22)
	1 M - 1 H	42 - 36 (26 - 22)

37-30

Transmission Code Letter	Shift	Kickdown km/h (mph)
CKX	1 H - 1 M	46 - 52 (29 - 32)
	1 M - 2 H	46 - 52 (29 - 32)
	2 H - 2 M	90 - 96 (56 - 60)
	2 M - 3 H	90 - 96 (56 - 60)
	3 H - 3 M	105 - 111 (65 - 69)
	3 M - 4 H	131 - 137 (81 - 85)
	4 H - 4 M	131 - 137 (81 - 85)
	4 M - 4 H	132 - 126 (82 - 78)
	4 H - 3 M	132 - 126 (82 - 78)
	3 M - 3 H	99 - 93 (61 - 58)
	3 H - 2 M	89 - 83 (55 - 51)
	2 M - 2 H	89 - 83 (55 - 51)
	2 H - 1 M	39 - 33 (24 - 20)
	1 M - 1 H	39 - 33 (24 - 20)

37-31

Transmission Code Letter	Shift	Kickdown km/h (mph)
CKZ	1 H - 1 M	...
	1M - 2 H	...
	2 H - 2 M	...
	2 M - 3 H	...
	3 H - 3 M	...
	3 M - 4 H	...
	4 H - 4 M	...
	4 M - 4 H	...
	4 H - 3 M	...
	3 M - 3 H	...
	3 H - 2 M	...
	2 M - 2 H	...
	2 H - 1 M	...
	1 M - 1 H	...

37-32

Stall speed, measuring

- Connect tachometer, e.g. V.A.G 200 VW1367 or equivalent to engine or with V.A.G 1551 Scan Tool read engine rpm in measuring value block.

- Lock wheels with parking brake and foot brake.

- Start engine and place selector lever in D position

- Briefly apply Wide Open Throttle (max. 5 seconds). If necessary repeat after 20 seconds. The stall speed listed in the chart must be attained.

- If end speed is not attained, check the following;

Stall speed too high:	Forward clutch slips, One-way clutch slips
Stall speed up to 200 rpm too low:	Check engine adjustment
Stall speed over 200 rpm too low:	Torque converter faulty

If in doubt, always check the engine adjustment and correct if necessary.

The correct torque converter must always be installed with the correct transmission.

Stall Speed Chart

Transmission Code Letter	Torque Converter Code Letter	Stall speed rpm
CLB	QCDV	2050 - 2350
CLK	QADB	2550 - 2850
CKX	QADB	2250 - 2550
CKZ	QCDB	...

37-34

Main Pressure, measuring

- Before measuring the main pressure activate the Diagnostic Trouble Code (DTC) Memory and eliminate possible electrical malfunctions. ⇒ Page 01-27

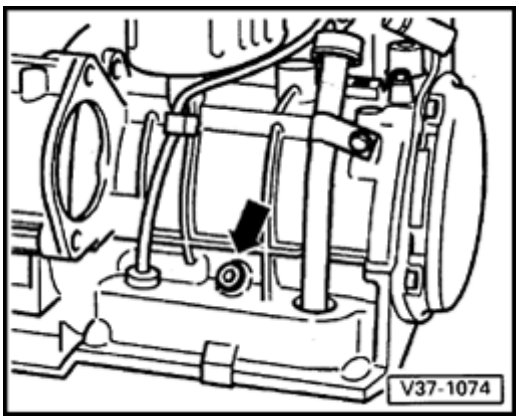

➢ Connector for pressure manometer (arrow)

- Remove bolt for main pressure tap

Note:

Always replace bolt for main pressure tap.

- Connect pressure tool V.A.G 1702 or equivalent and tighten knurled screw.
- Vent pressure tool line V.A.G 1702 by loosening the knurled screw with engine running.

Note:

Re-tighten knurled screw after ventilation.

37-35

- Bring ATF temperature to 60° C (140° F) by connecting V.A.G 1551 Scan Tool and reading measuring value block ⇒ Page 01-46

Min. Pressure Specified value in bar (psi) gauge pressure:

Automatic Transmission	Selector lever positions and test conditions			
01M			Connector for solenoid valves removed [1]	
	D Idle	R Idle	D Engine speed approx. 2000 rpm	R Engine speed approx. 2000 rpm
Main pressure in bar (psi)	3.4 - 3.8 (49 - 55)	6.5 - 7.5 (94 - 109)	10.1 - 11.3 (146 - 164)	23.0 - 24.0 (334 - 348)

[1] After connecting the connectors for solenoid valves, activate Diagnostic Trouble Code (DTC) Memory and erase, ⇒ Page 01-42

- If possible, conduct the main pressure check on a chassis dynamometer (rolling road).

If deviations to the specified values are observed the following may be the cause:

Possible Cause	**Remedy**
Idle rpm too high	Adjust engine
ATF-Pump faulty	Check ATF Pump and replace if necessary
Valve stuck in valve body	Replace valve body

Transmission, removing and installing

Removing

- Obtain radio code on vehicles with coded radio.

- Disconnect Battery Ground (GND) strap.

  - Remove Battery on vehicles with 6-cylinder engines.

- Disconnect speedometer connector at transmission.

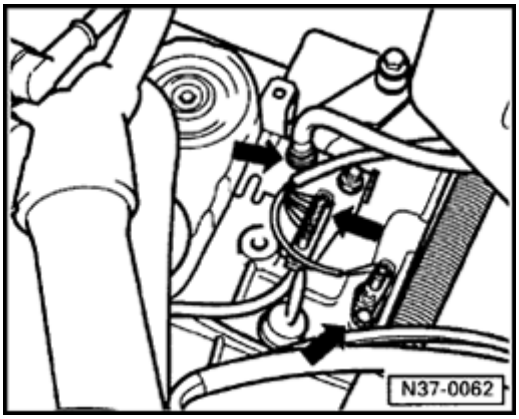

- Remove electrical connections (arrows) at transmission.
- Move selector lever to "P" and unfasten selector lever cable from lever/selector shaft.
- Remove selector lever cable anchorage circlip and remove selector lever cable.

37-37

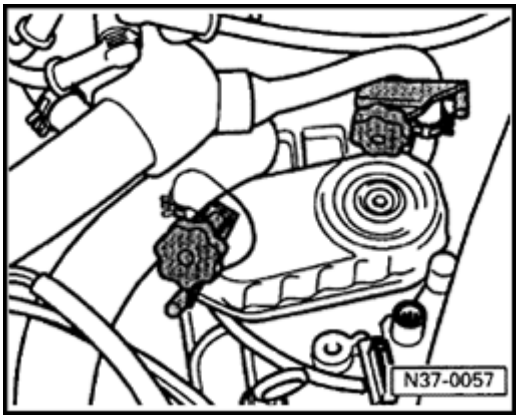

- Clamp-off ATF cooler hoses with -3094- or equivalent and disconnect at ATF cooler.
- Disconnect connector from Coolant Fan motor.
- Remove upper engine/transmission connecting bolts.
- Remove Starter.

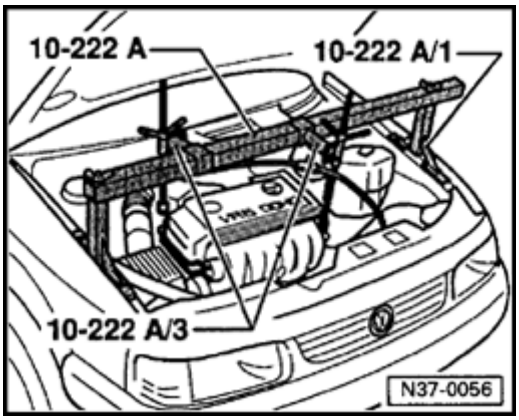

- Install support bar 10-222 A with legs 10-222 A/1 (6-cyl. engine adapter 10-222 A/3) and support engine/transmission in this position.

37-38

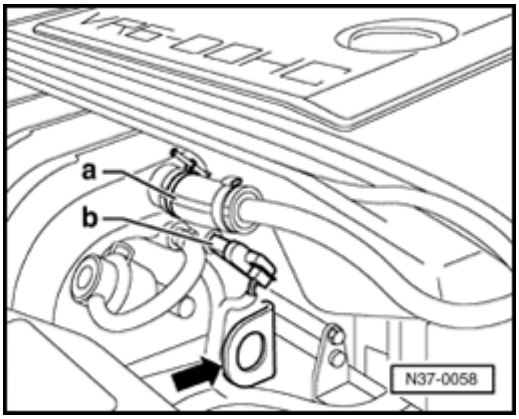

- Remove vacuum line -a- and connector -b- before inserting support bar into eye (arrow) on vehicles with 6-cylinder engines.

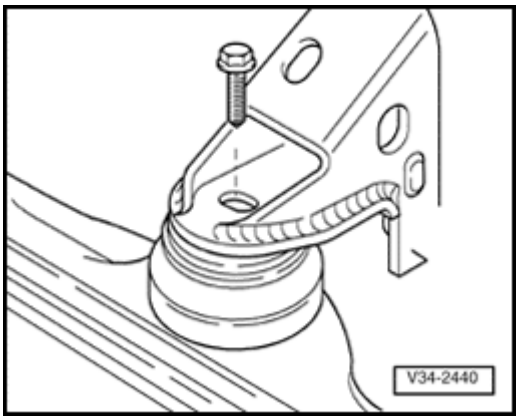

- Disconnect front mount from engine carrier.
- Remove mount.
- Unfasten coolant expansion tank and lay to one side.
- Remove left engine mounting complete.
- Remove right-hand belt drive cover on vehicles with 6-cylinder engine.
- Disconnect drive shafts at flanges.
- Remove left wheel.

37-39

- Turn steering to right full lock.

- Raise right drive shaft and secure.

- Mark installation position of ball joint bolts on left-hand control arm and remove bolts.

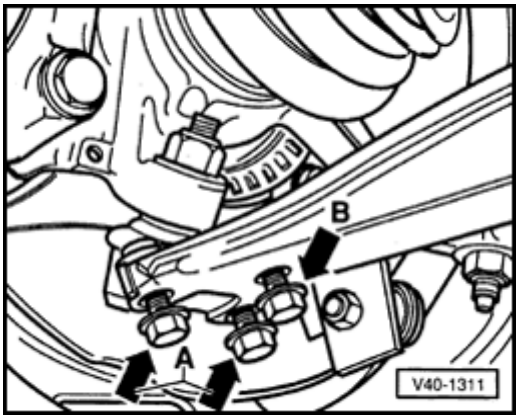

- Vehicles with Plus running gear, remove bolts -A- and loosen bolts -B-.

- Swing ball joint outward and move left-hand drive shaft to one side. Remove drive shaft with a tripodic (star shaped) joint.

⇒ *Repair Manual, Suspension, Wheels, Brakes, Steering, Repair Group 40 removing and installing drive shafts.*

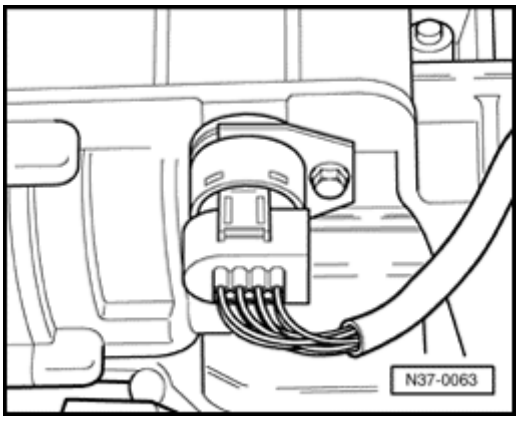

- Pull connector off Multi-function TR Switch and remove switch

- Remove ATF oil pan protective plate.

37-40

- Remove balance weight.

- Remove bracket for power steering pressure hose.

- Remove torque converter cover plate and nuts from torque converter.

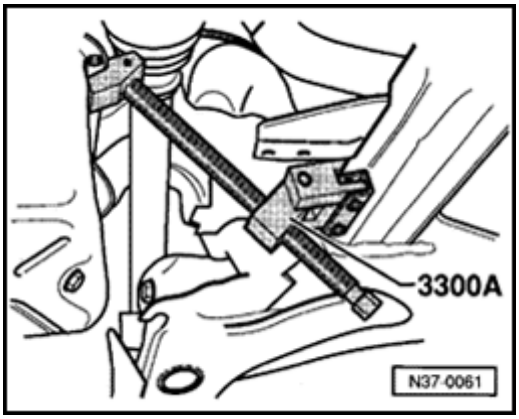

- Tilt engine and transmission forward with supporting device 3300 A.
- Lower engine using support device spindle.

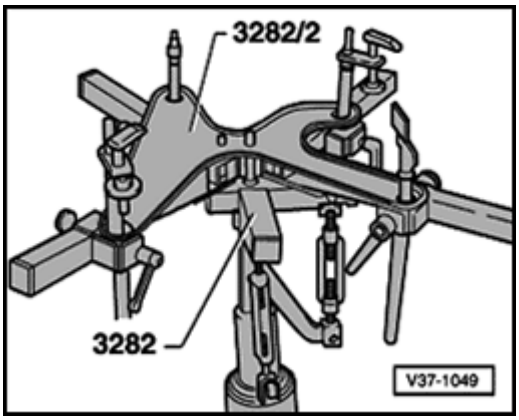

- Set up transmission support 3282.

The transmission support 3282 is set up with the adjusting plate 3282/2 for removing the automatic transmission 096 and 01M.

The symbols on the adjusting plate indicate the mounts required.

37-41

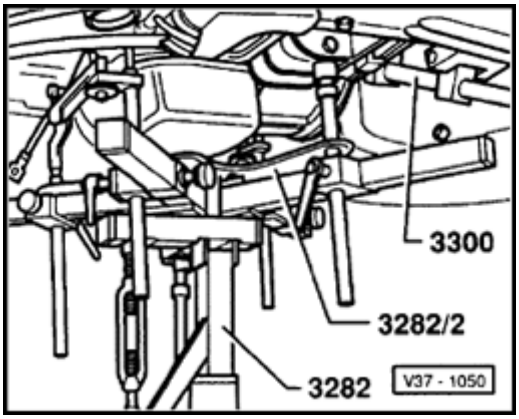

- Move jack V.A.G 1383 A with transmission support 3282 under transmission and support.

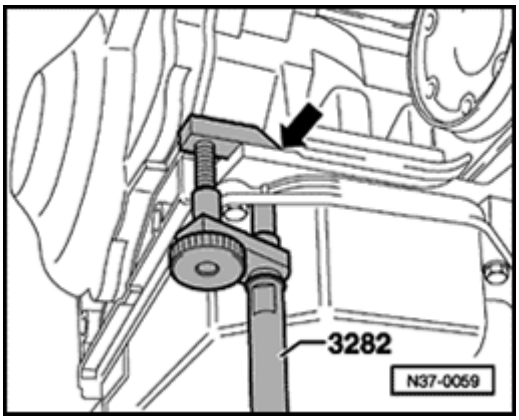

- Place securing mount pin on sump and secure to transmission housing (arrow).
- Remove lower engine/transmission connecting bolts.

37-42

- Press transmission off engine; when doing this, press torque converter out of drive plate.
- Press torque converter against ATF pump.
- Lower transmission slightly.
- Tilt transmission using transmission jack spindle and while lowering ensure cover (wheel housing side) is guided closely past wheel housing.
- Swivel transmission and carefully lower.
- Secure torque converter to prevent it falling out.

37-43

Installing

Installation is performed in the reverse order.

When installing the torque converter, ensure that both drive pins engage in the ATF pump inner wheel recesses.

- Before installing, ensure that the dowel sleeves are correctly located.
- When installing transmission, observe torque converter contact impression on drive plate.

- Replace selector cable anchorage locking washer.
- Check selector lever cable adjustment, adjust if necessary ⇒ Page 37-3 .

Tightening torques

Drive shaft to flange	45 Nm (37 ft lb)
Torque converter to drive plate	60 Nm (44 ft lb)
Transmission to engine bolt (M 12)	80 Nm (59 ft lb)
Transmission to engine bolt (M 10)	60 Nm (44 ft lb)
Front mount to assembly	60 Nm (44 ft lb)
Left mount to assembly	60 Nm (44 ft lb)
Left mount to transmission	25 Nm (18 ft lb)
Cover plate to transmission	15 Nm (11 ft lb)
Ball joint to control arm	35 Nm (26 ft lb)
Starter to transmission	60 Nm (44 ft lb)

37-45

Automatic transmission, transporting

Special tool 3336 may be used to transport the automatic transmission and also when setting up transmission support 3282.

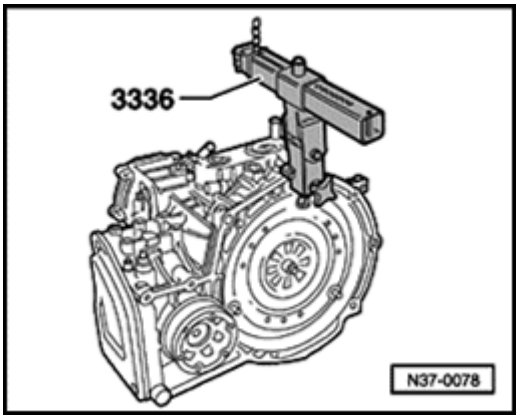

- Secure special tool 3336 to transmission housing flange.
- Position pins so that 8 holes are visible on chain side of tool.

37-46

ATF level, checking and topping off

VW ATF is obtainable as a spare part.

Container size 0.5 L - Part No. G 052 162 A1

Container size 1.0 L - Part No. G 052 162 A2

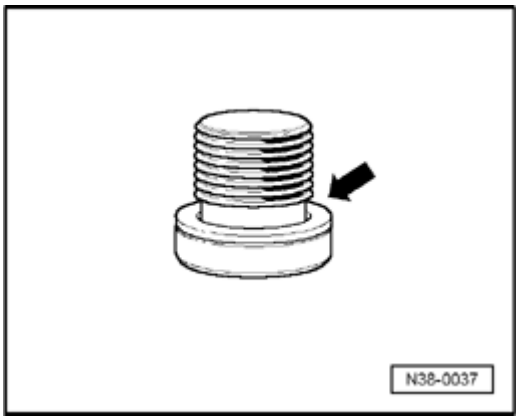

- If ATF level is checked, seal (arrow) on ATF level plug must always be replaced.

37-47

ATF level, checking

Conditions for performing check

- Transmission not in emergency running mode. ATF temperature not above approx. 30 ° C (86 ° F).
- Vehicle level
- Selector level at "P"

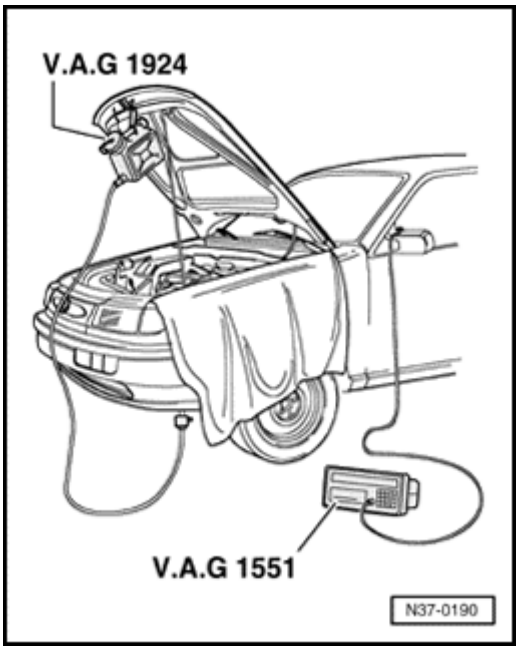

- Secure reservoir of ATF filing system V.A.G 1924 to vehicle.
- Connect Scan Tool V.A.G 1551 and enter address word "02 Transmission electronics" and advance until "Select function XX" indicated on display ⇒ Page 01-22 .

37-48

- Start engine.

- Raise vehicle.

Rapid data transfer **HELP**

Select function

Indicated on display:

- Press keys 0 and 8. (The function "Read measuring value block" is selected with 08.)

Rapid data transfer

08 - Reading measured value block

Indicated on display:

- Confirm entry with key Q.

Reading message value block

Enter display group number

Indicated on display:

- Press keys 0 and 5. (05 selects the "Display group number 05".)
- Confirm entry with key Q.

Reading measured value block **5** →

40 ° C 0011011 0 900 rpm

Indicated on display:

The first display zone shows the ATF temperature.

Note:

The ATF temperature must not be more than approx. 30 ° C.

37-49

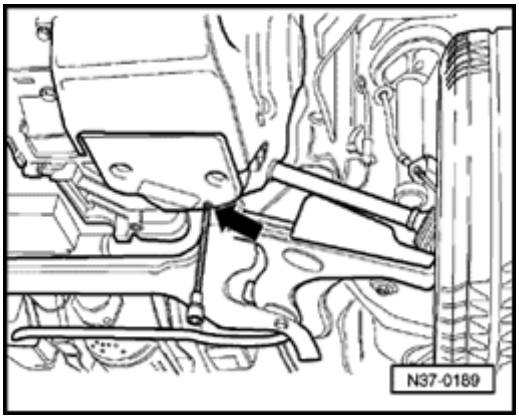

- Remove ATF level plug from the oil pan (arrow).
- Bring ATF to test temperature.

Test temperature: 35° C to 45° C

The ATF present in overflow tube (inside plug hole) runs out.

ATF drips out of plug hole:

ATF level does not need to be topped up.

- Install plug with new seal. Tighten plug to 15 Nm (11 ft lb)

If only ATF present in overflow tube runs out of plug hole when plug removed, top up ATF level.

37-50

ATF, topping off

- Pry off plug securing cap -arrow- with a screwdriver. When prying off the cap the locking device will be damaged, therefore always replace the cap.

Note:

On some transmission a cap with a spring retainer is installed. This cap can be used again.

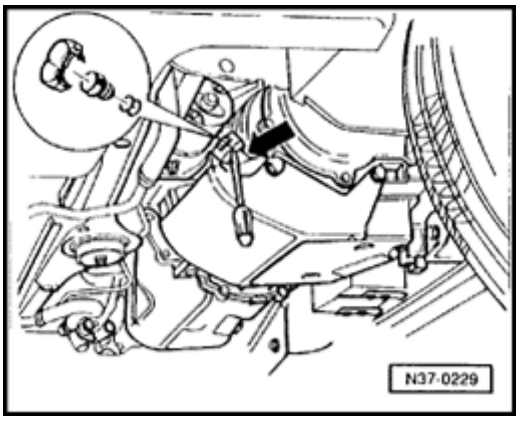

- Pull plug out of filter pipe.

37-51

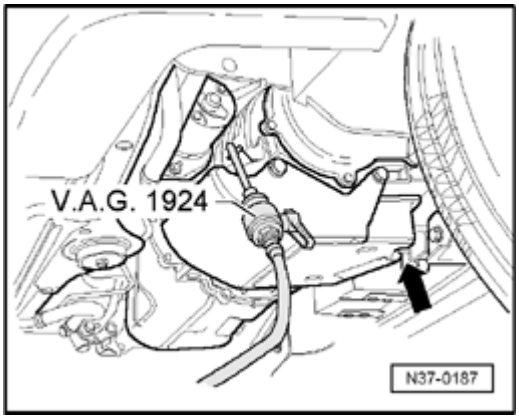

- Fill with ATF using V.A.G 1924, until ATF runs out of level plug hole (arrow).

CAUTION!

If the ATF level is too high or too low it will adversely affect the operation of the transmission.

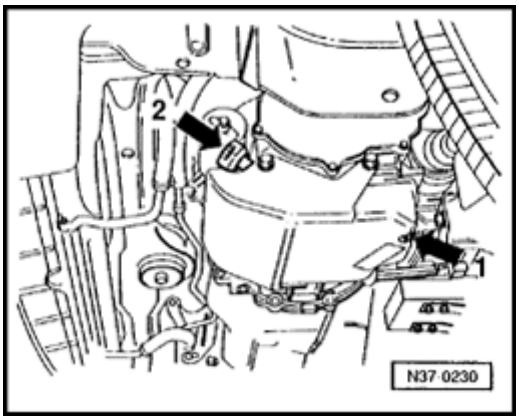

- Install plug with new seal (arrow -1-) and tighten to 15 Nm (11 ft lb).
- Install sealing plug on filler pipe until spring retainer lock locates, or
- Install sealing plug to filler pipe and secure with new cap (arrow -2-).
- Lock cap.

CAUTION!

Always replace the cap if it is of the separate cap/plug type. The cap secures the plug.

37-52

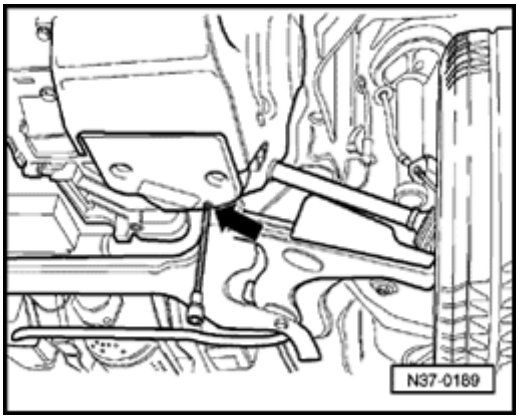

ATF, changing

- Remove ATF level plug from oil pan (arrow).
- Remove overflow tube through the plug hole.
- Drain ATF.
- Install overflow tube.
- Screw level plug in hand-tight.
- Fill with 3 Liters of ATF through filler pipe.
- Start engine and shift through all selector level positions with vehicle stationary.
- Check and top up ATF level ⇒ Page 37-46 .

Capacity planetary transmission ⇒ Page 00-10 .

Specification: Use only VW ATF

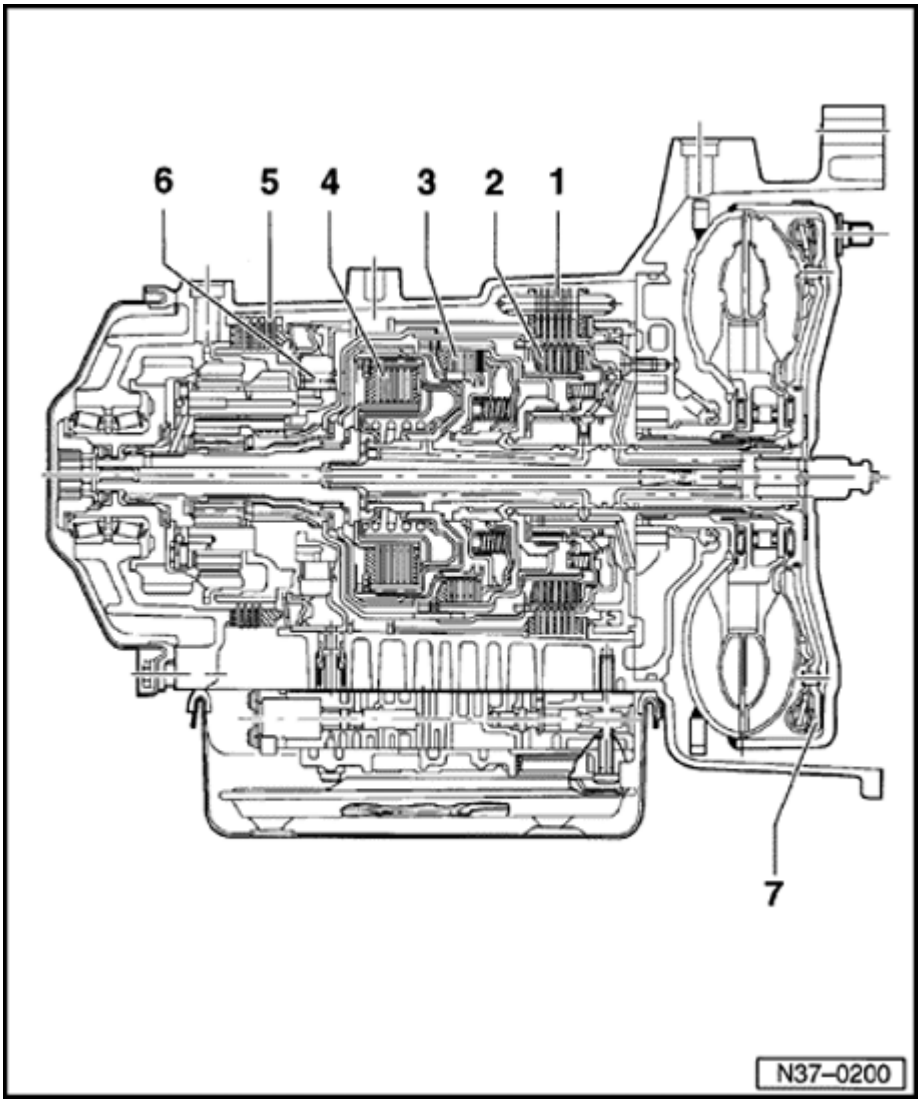

Transmission with selector elements

Position of selector elements

- **1 - 2nd and 4th gear brake -B2-**
- **2 - Reverse gear clutch - K2-**
- **3 - 1st to 3rd gear clutch - K1-**
- **4 - 4th gear clutch -K3-**
- **5 - Reverse gear brake - B1-**
- **6 - Free wheel clutch**
- **7 - Lock-up clutch integrated in torque converter -LC-**

Before starting repairs to the transmission, first perform the On Board Diagnostic (OBD) ⇒ Page 01-22 .

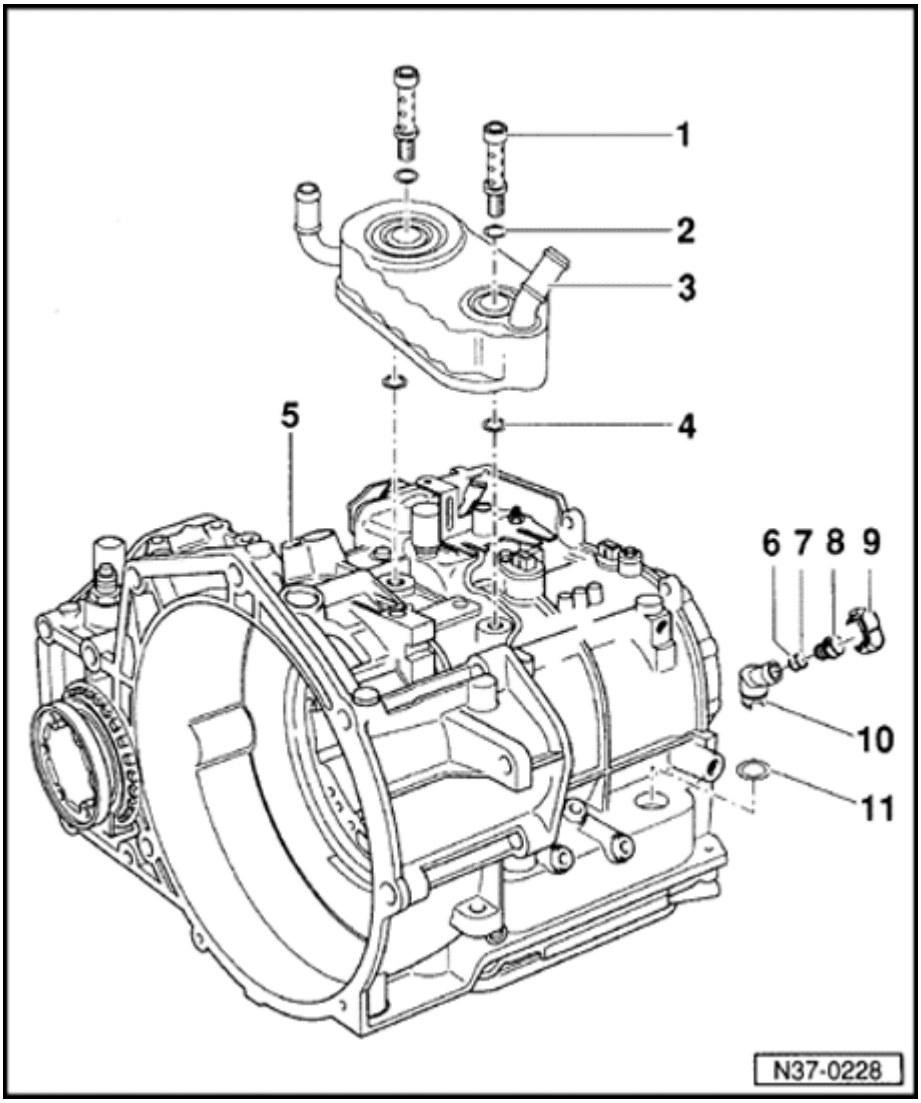

ATF cooler and ATF filler tube, removing and installing

1 - Banjo bolt, 35 Nm (26 ft lb)

2 - O-ring

- Always replace

3 - ATF cooler

4 - O-ring

- Always replace

5 - Transmission housing

6 - Seal

- Always replace

7 - Seal

- Always replace

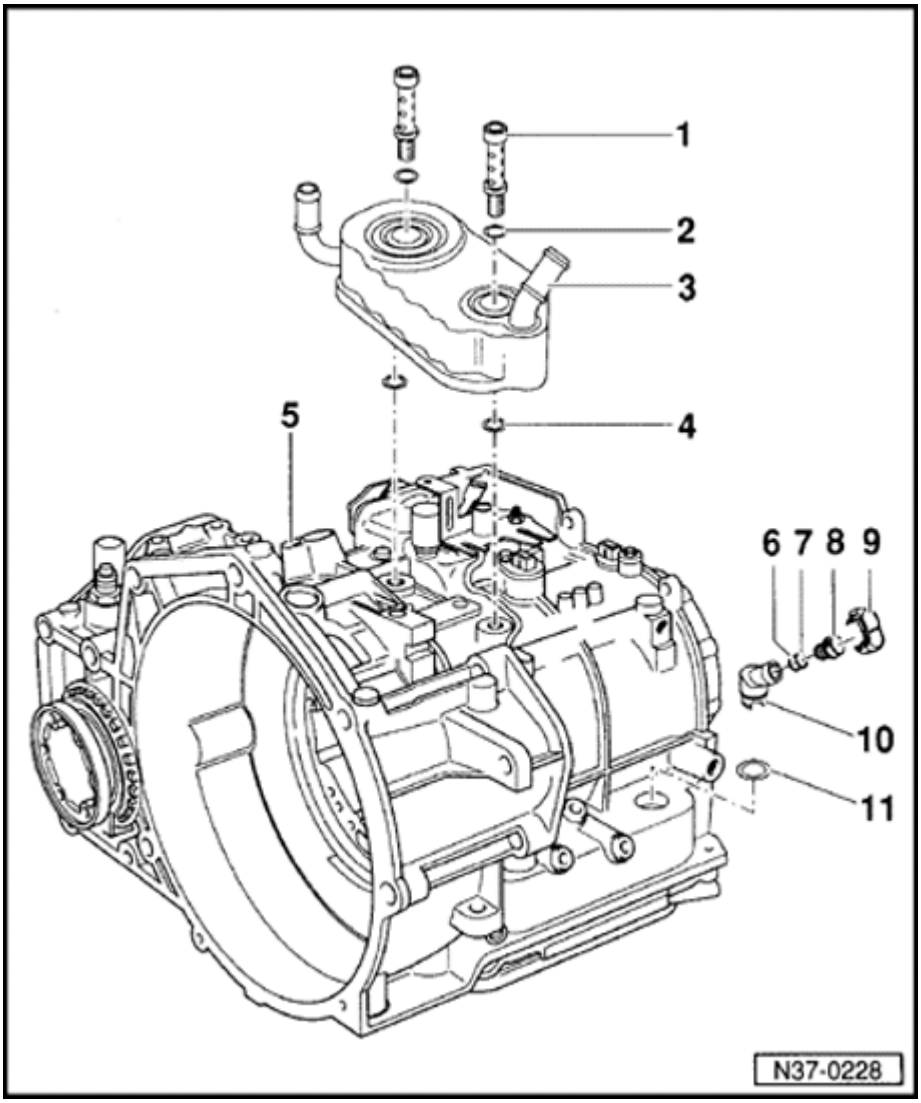

8 - Plug

9 - Cap

- To secure the level plug after checking ATF level ⇒ Page 37-46 always replace

Note:

Some transmissions are equipped with a cap together with a clasp. These caps are reusable.

10 - ATF filler tube

11 - O- ring

- Always replace

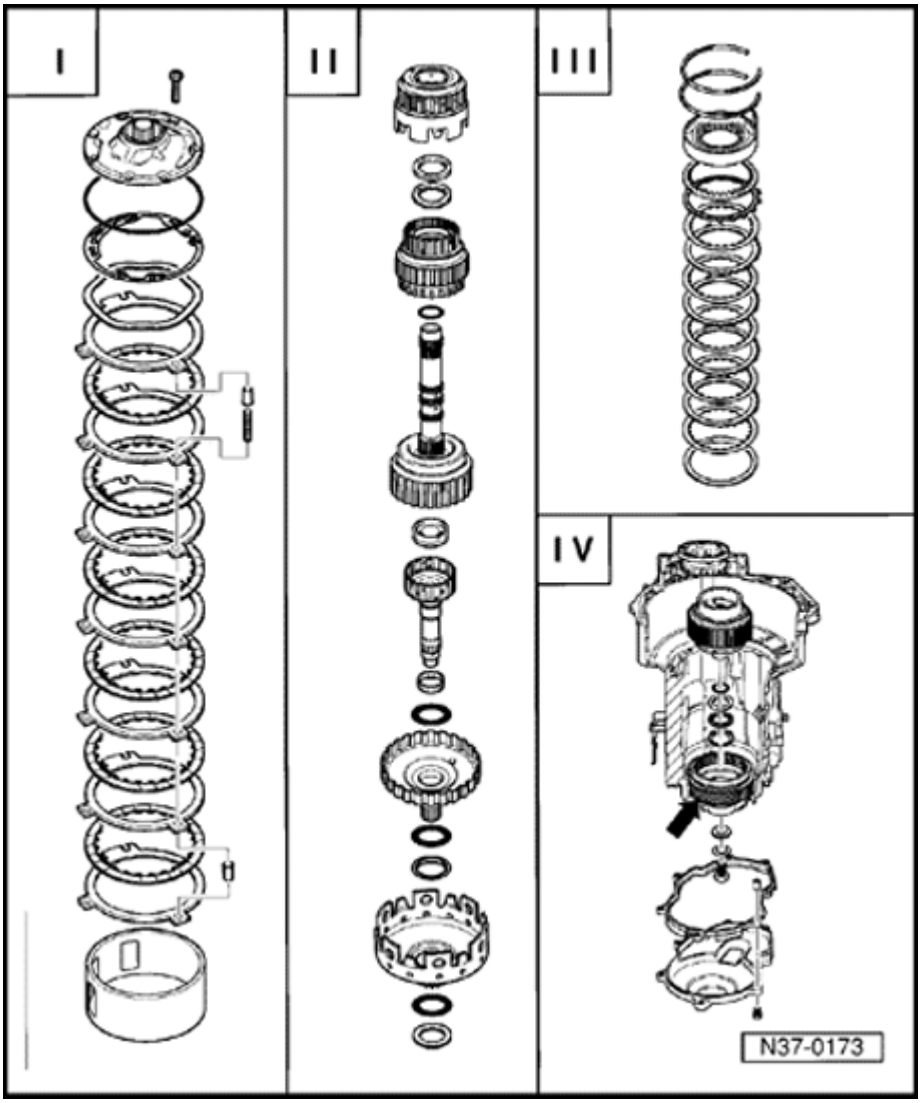

Planetary transmission, disassembling and assembling -Overview-

Note:

Disassembling planetary transmission ⇒ Page 37-71 , ⇒ Page 37-78 Assembling.

I - Removing and installing: ATF pump to supporting tube ⇒ Page 37-61

II - Removing and installing: Reverse gear clutch -K2- to large sun gear ⇒ Page 37-64

III - Removing and installing: Free wheel and reverse gear brake -B1- ⇒ Page 37-67

Note:

To remove and install free wheel first remove valve body together with plugs ⇒ Page 38-20 .

37-60

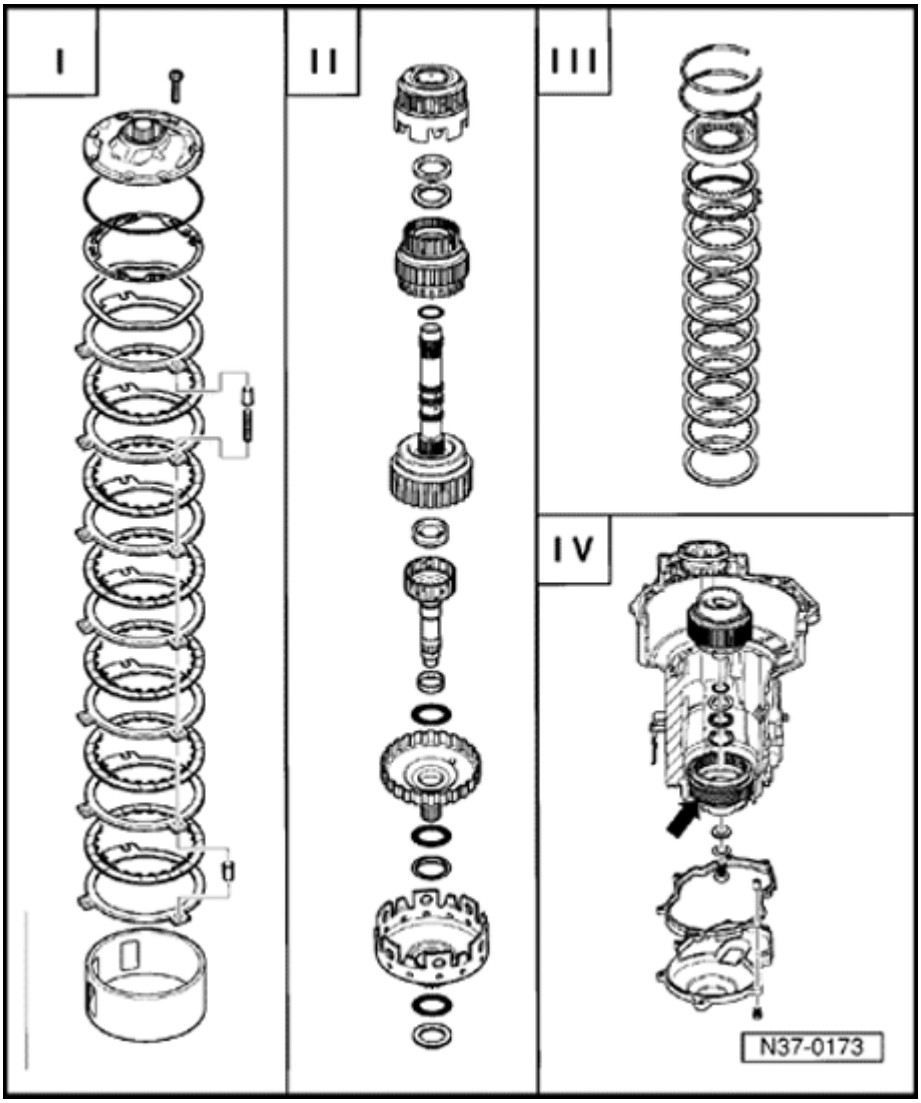

IV - Removing and installing planet carrier ⇒ Page 37-69

Note:

It is not necessary to remove input gear (arrow).

Removing and installing input gear ⇒ Page 39-8 .

37-61

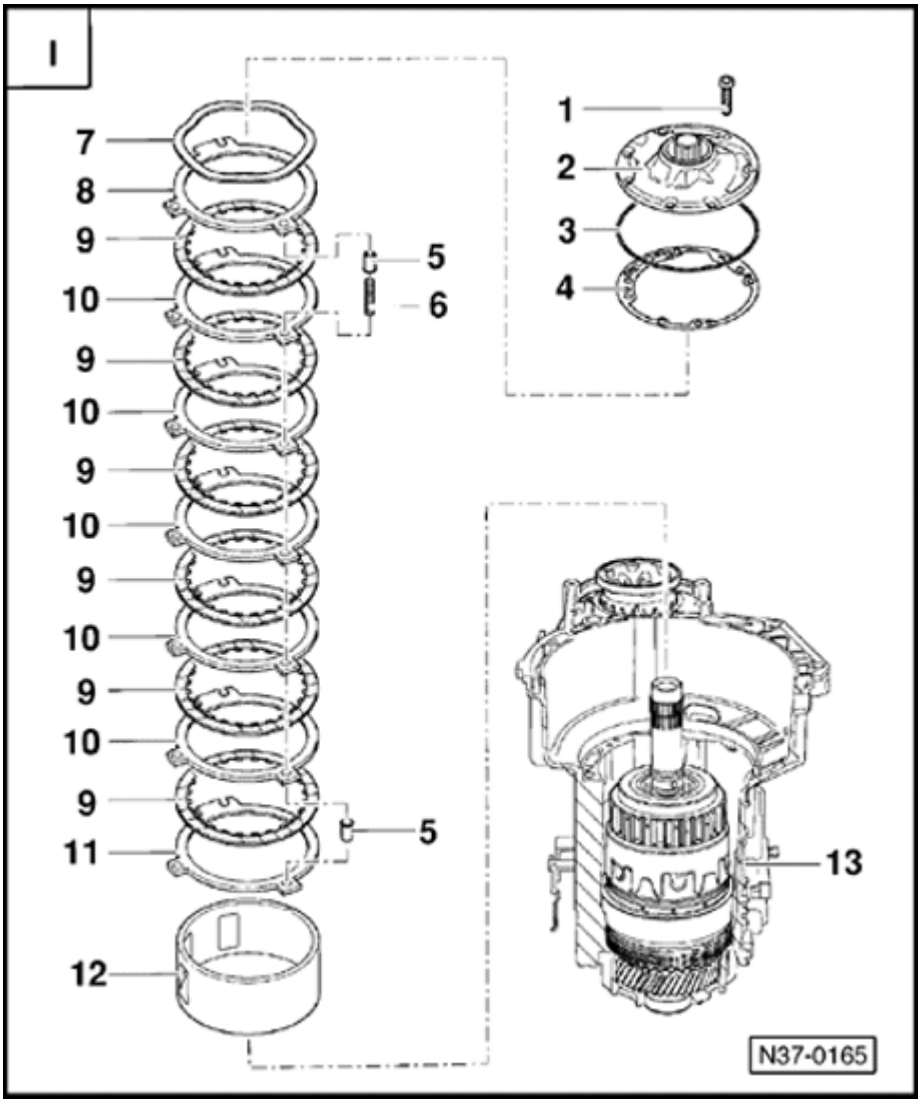

I - ATF pump to supporting tube, removing and installing

Overview, ⇒ Page 37-59

Note:

Disassembling planetary transmission ⇒ Page 37-71 ,

Assembling ⇒ Page 37-78 .

1 - Bolt

- Qty. 7
- Tighten to 8 Nm (70 in. lb) plus an additional $^{1}/_{4}$ turn (90 °)
- The additional turn of 90 ° may be done in several stages

2 - ATF pump with -B2- piston

- Disassembling and assembling ⇒ Page 38-1

3 - O-ring

- Always replace
- Place on ATF pump

37-62

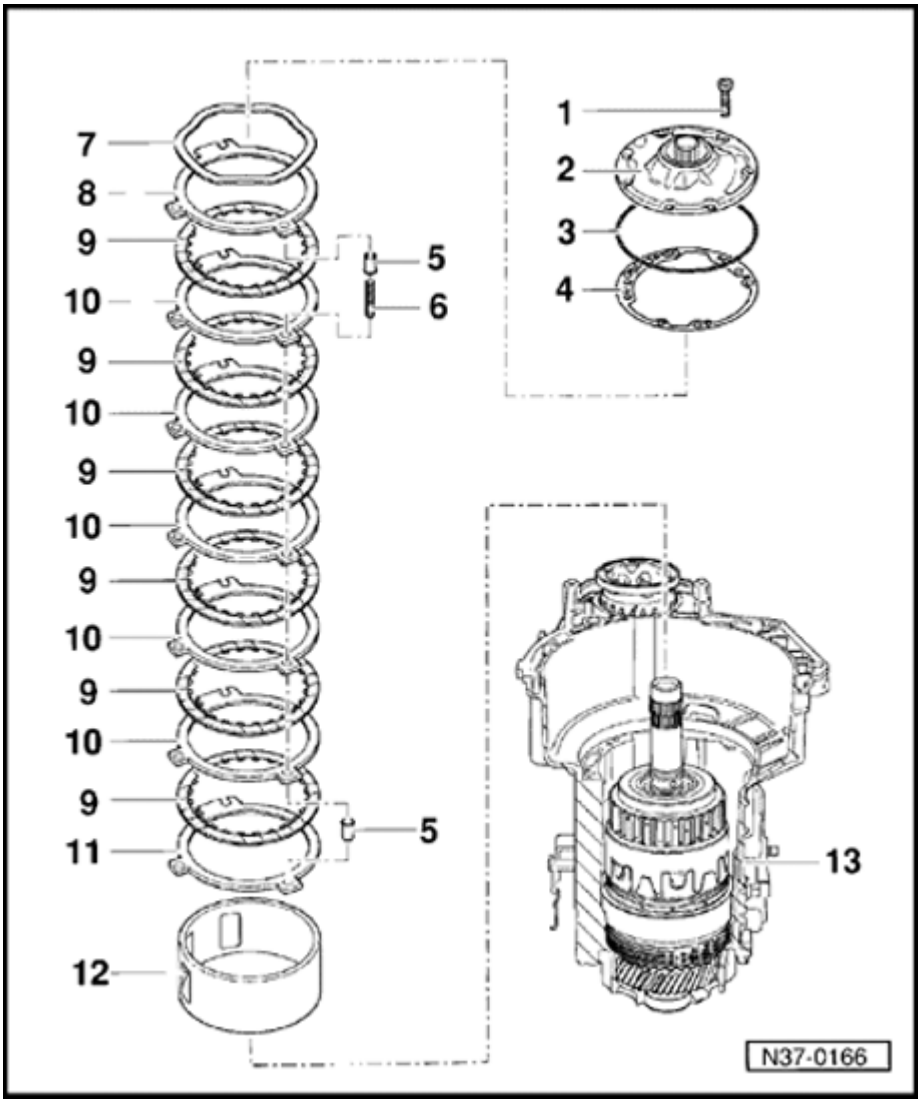

4 - Gasket

- Always replace

5 - Spring cap, ty. 6

- Install 3 spring caps after installing first outer plate
- Install 3 spring caps before installing last outer plate

6 - Spring

- Qty. 3

7 - Corrugated spring washer

8 - Outer plate -B2-

- Quantity ⇒ Page 00-6
- Determining thickness of outer plate, Adjusting 2nd and 4th gear brake - B2-, ⇒ Page 37-113

9 - Inner plate -B2-

- Quantity ⇒ Page 00-6
- Before installing place new inner plates in ATF for 15 minutes

37-63

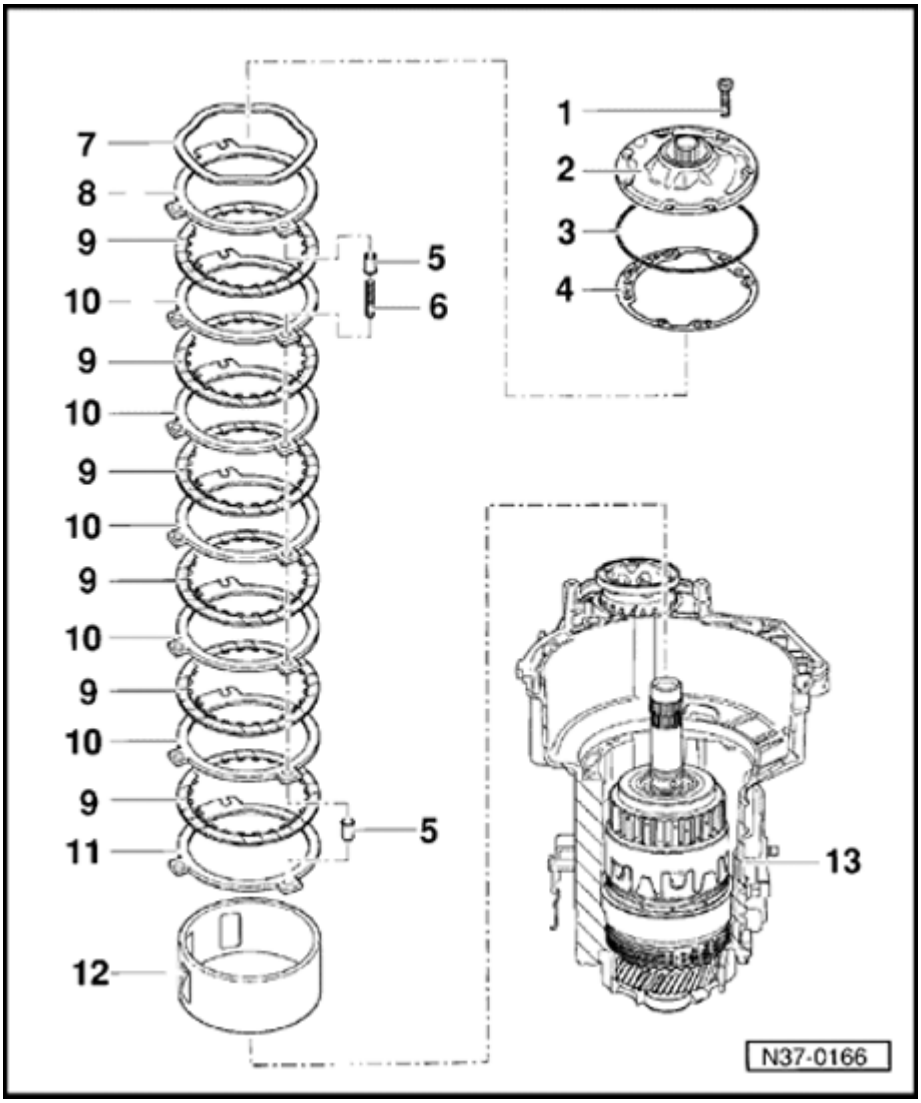

10 - Outer plate -B2-

- Always install 2 mm thick outer plates
- Quantity ⇒ Page 00-6

11 - Outer plate-B2-

- Install 3 mm thick outer plate to supporting tube

12 - Supporting tube-B2-

- For the -B2- plate package
- Length of -B2- with

5 inner plates 68.6 mm

6 inner plates 64.9 mm

- Quantity of -B2- inner plates ⇒ Page 00-6
- Install so that groove engages in wedge of free wheel

13 - Transmission housing with clutches installed

37-64

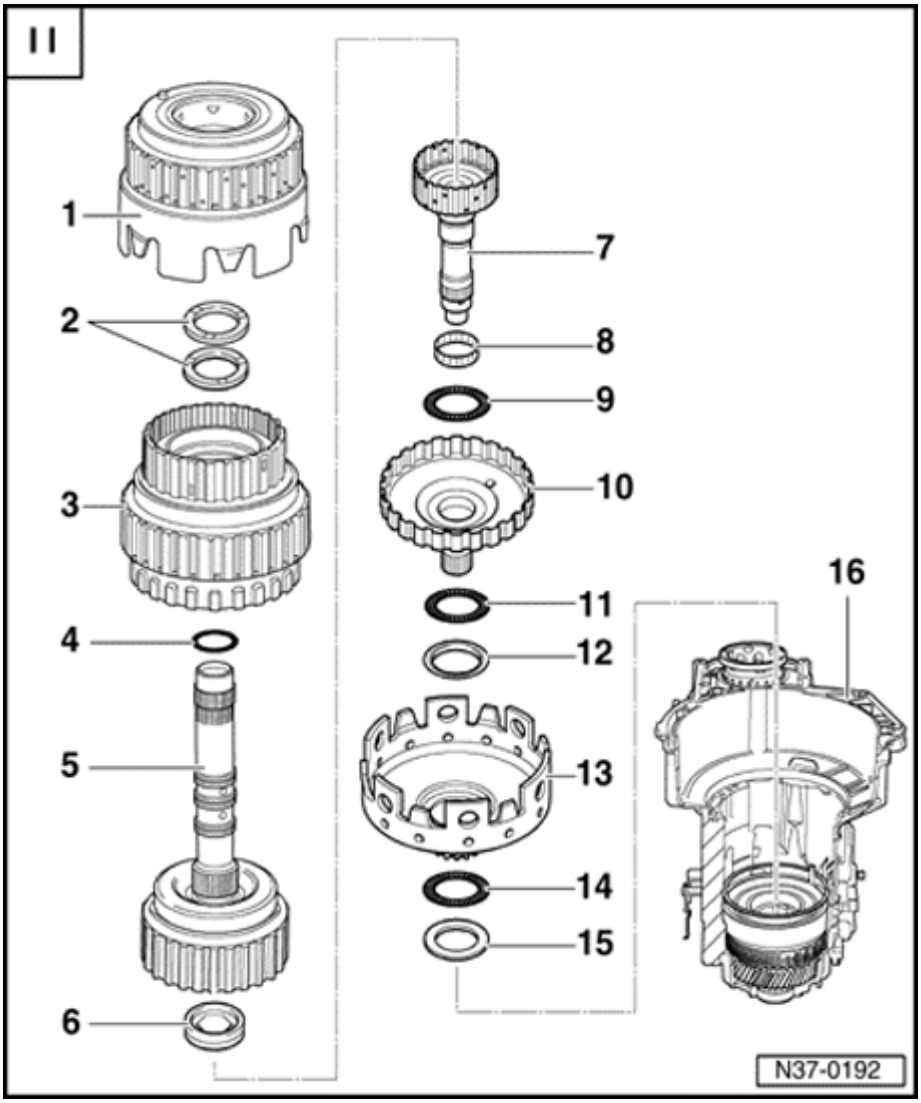

II - Reverse gear clutch -K2- to large sun gear, removing and installing

Overview, ⇒ Page 37-59

Note:

Disassembling planetary transmission ⇒ Page 37-71 ,

Assembling ⇒ Page 37-78 .

1 - Reverse gear clutch -K2-

- Disassembling and assembling ⇒ Page 38-12

2 - Shim

- Determining thickness ⇒ Adjusting clutch play between -K1- and -K2-, ⇒ Page 37-106
- 1 or 2 shims can be installed

37-65

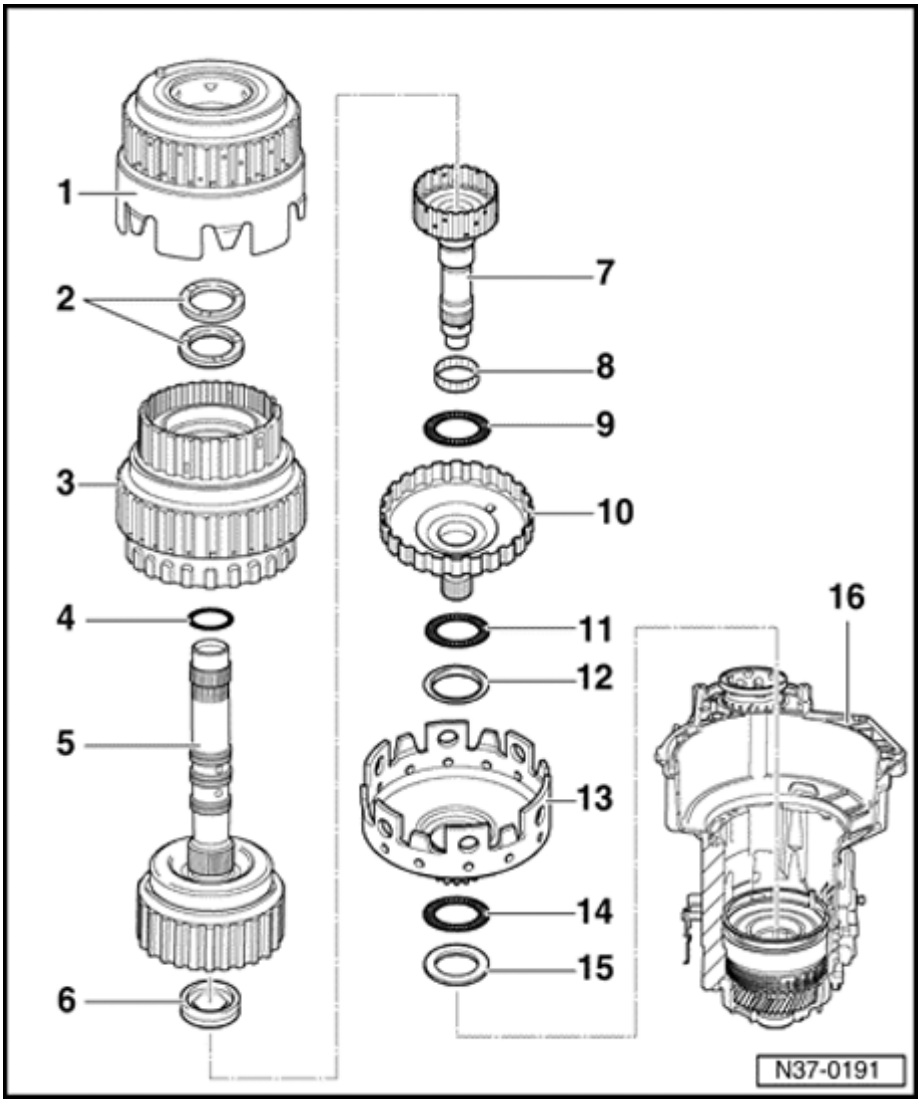

3 - 1st to 3rd gear clutch - K1-

- Disassembling and assembling ⇒ Page 38-7

4 - Seal

- Always replace

5 - 4th gear clutch -K3- with turbine shaft

- Disassembling and assembling ⇒ Page 38-15

6 - Axial needle bearing with washer

- Axial needle bearing faces toward small drive shaft

7 - Small drive shaft

8 - Needle bearing

9 - Axial needle bearing

10 - Large drive shaft

11 - Axial needle bearing

37-66

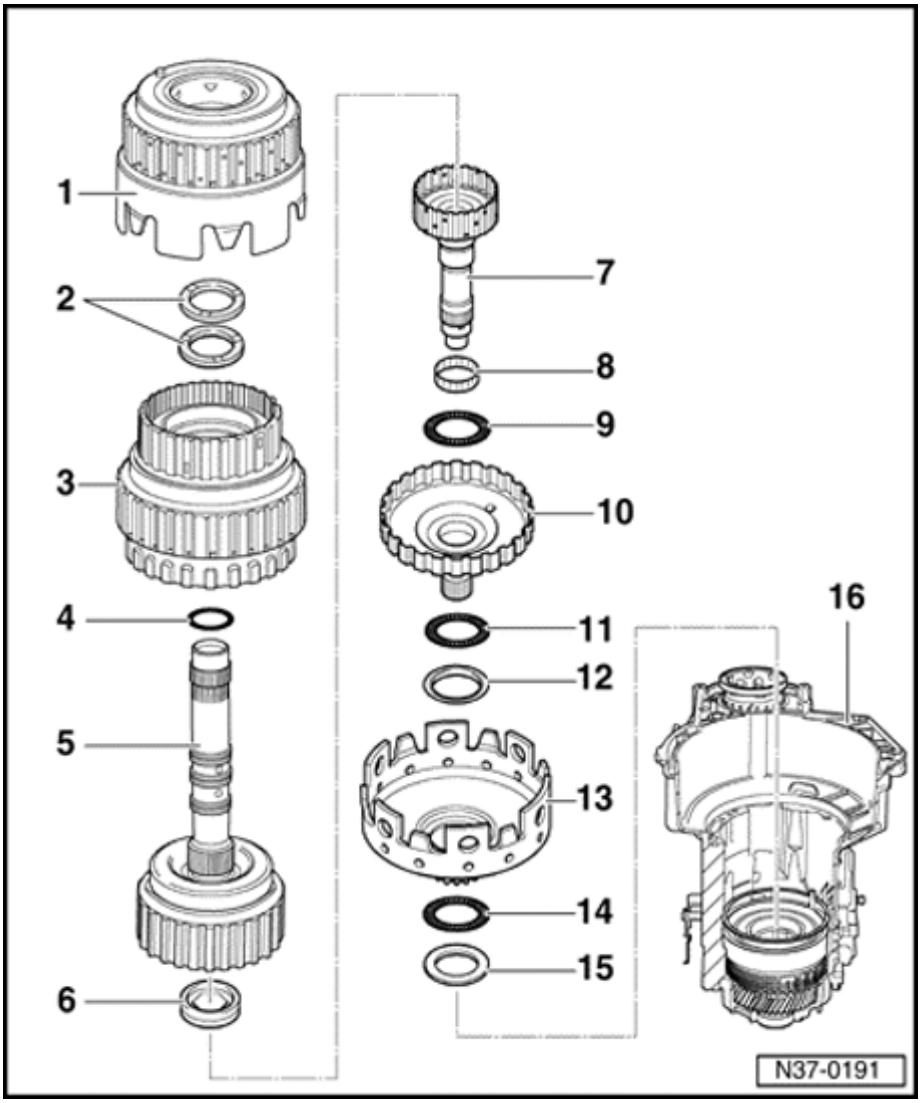

12 - Axial needle bearing washer

- With shoulder

13 - Large sun gear

14 - Axial needle bearing

15 - Axial needle bearing washer

16 - Transmission housing with free wheel and circlips installed

37-67

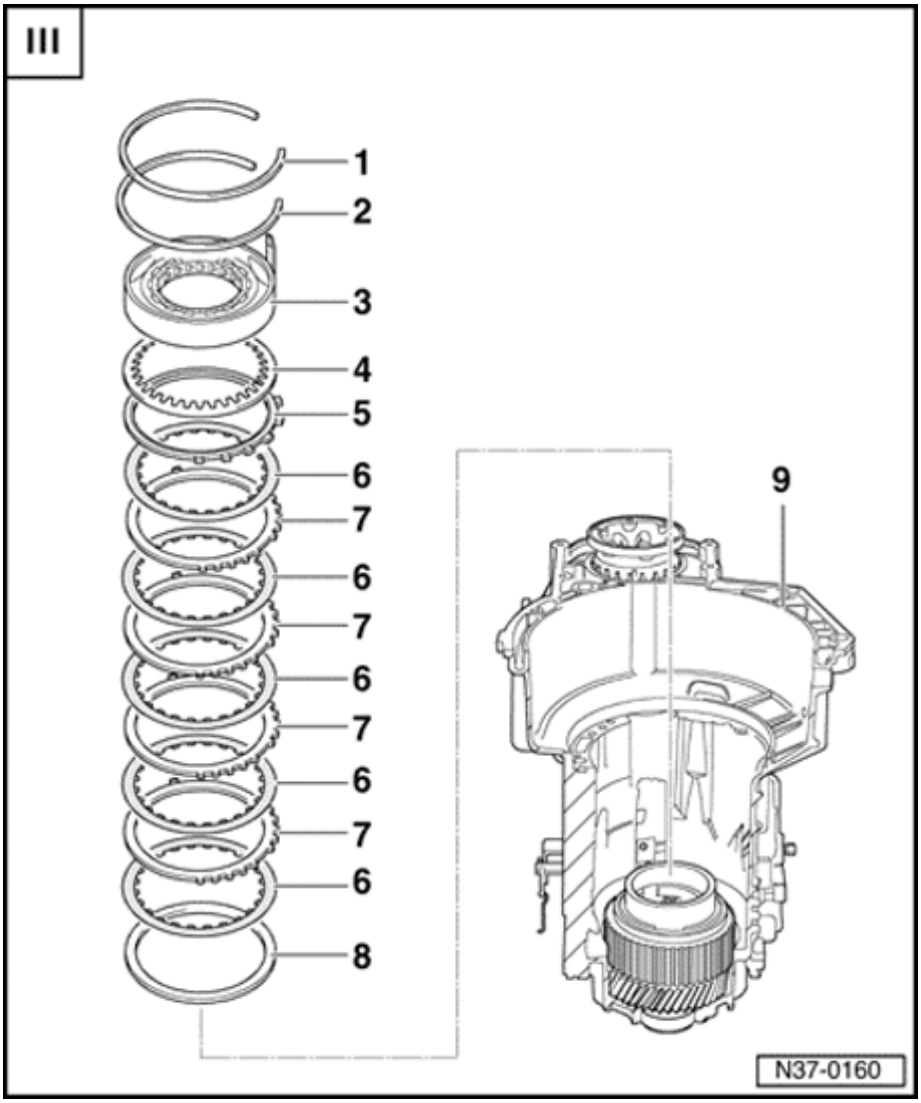

III - Free wheel and reverse gear brake -B1-, removing and installing

Overview, ⇒ Page 37-59

Note:

Disassembling planetary transmission ⇒ Page 37-71 ,

Assembling ⇒ Page 37-78 .

1 - Circlip

- For supporting tube -B2-

2 - Circlip

- For free wheel

3 - Free wheel with -B1- piston

- Before removing free wheel, remove valve body and sealing plugs ⇒ Page 38-20
- Disassembling and assembling ⇒ Page 38-4

4 - Dished spring

- Install with convex side facing free wheel

37-68

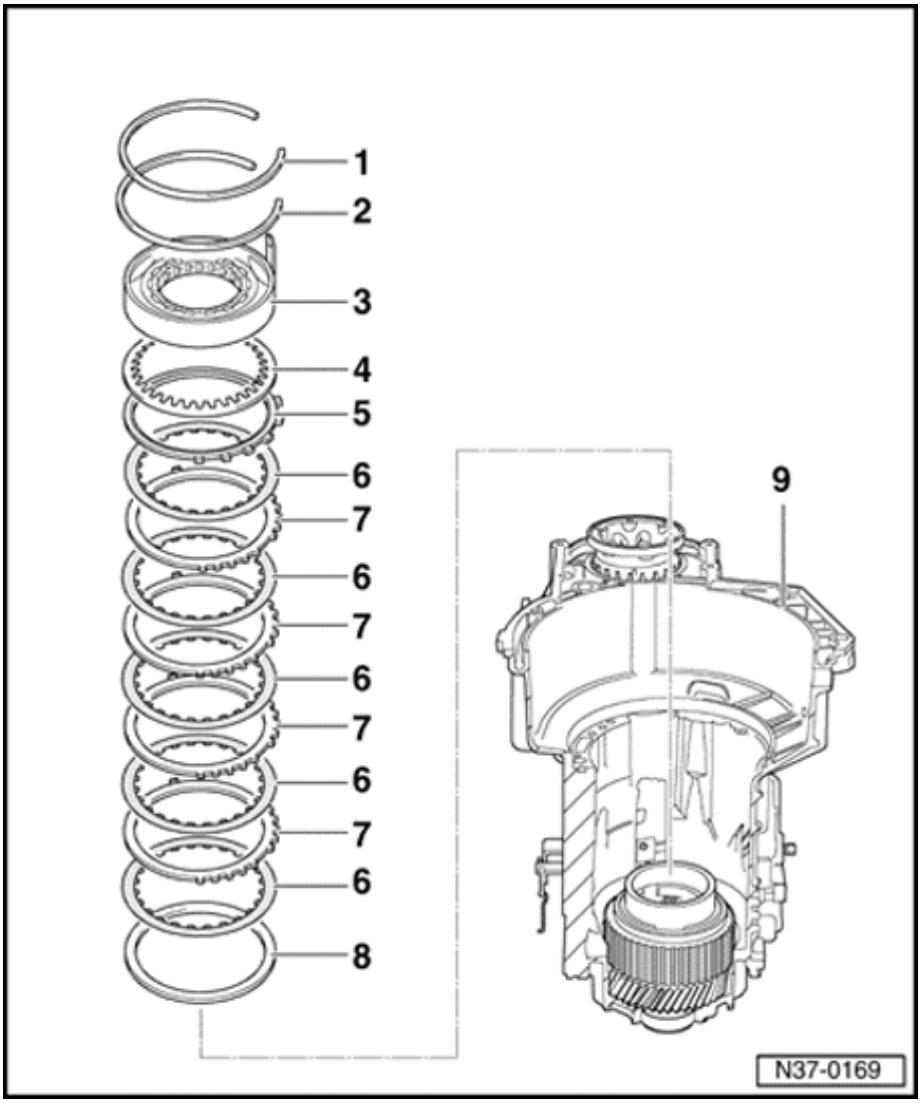

5 - Pressure plate -B1-

- Install with flat side facing plates
- Differing thicknesses depending upon number of inner plates installed:

Transmission with 4 inner plates

- 13.5 mm

Transmission with 5 inner plates

- 10.5 mm

6 - Inner plate, -B1-

- Quantity of inner plates -B1- ⇒ Page 00-6
- Before installing place plates in ATF for 15 minutes

7 - Outer plate, -B1-

- Quantity of inner plates -B1- ⇒ Page 00-6

8 - Shim

- Determining thickness ⇒ Page 37-99 , adjusting reverse gear brake -B1-

9 - Transmission housing with planet carrier installed

37-69

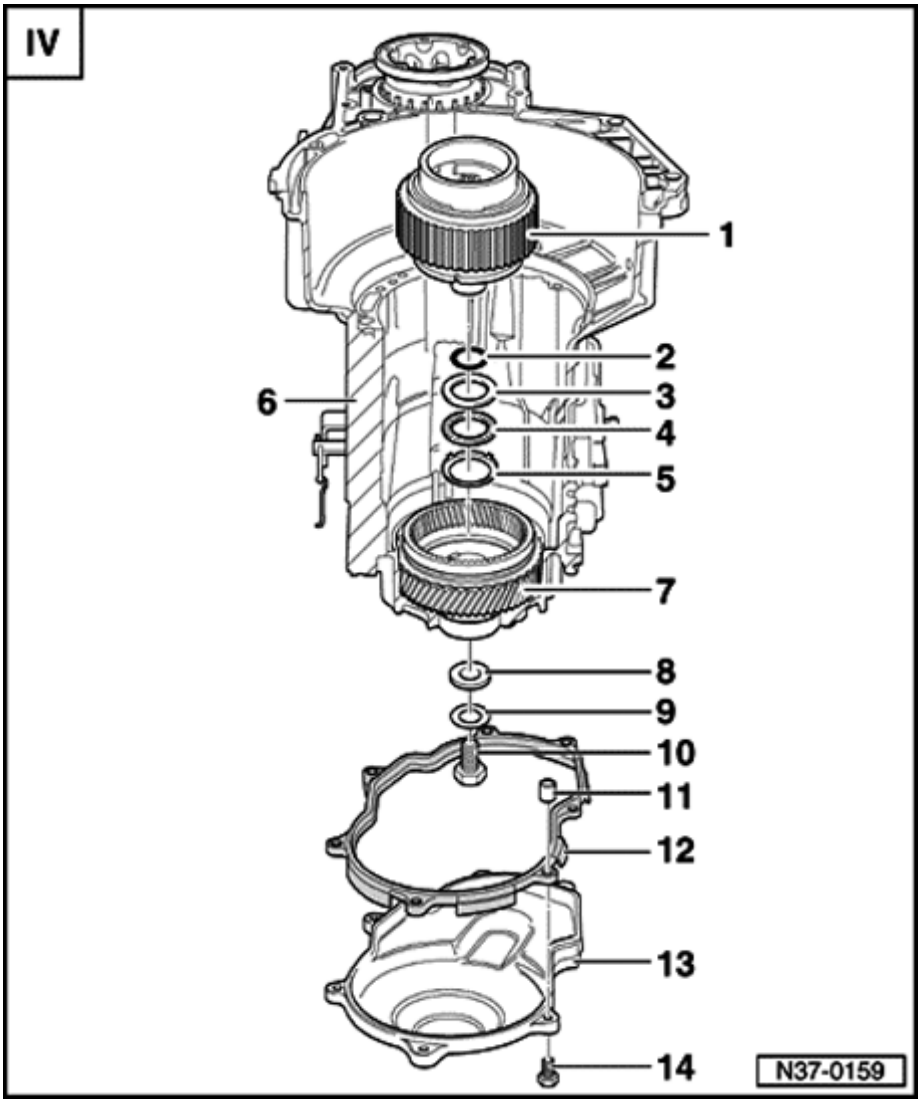

IV - Planet carrier and transmission housing with input gear and cover, assembling

Overview, ⇒ Page 37-59

Note:

Disassembling planetary transmission ⇒ Page 37-71 ,

Assembling ⇒ Page 37-78 .

1 - Planet carrier

- Adjusting ⇒ Page 37-91

2 - O-ring

- Always replace
- Insert in planet carrier

3 - Axial needle bearing washer

4 - Axial needle bearing

5 - Axial needle bearing washer

- Install smooth side in input gear

6 - Transmission housing with input gear installed

37-70

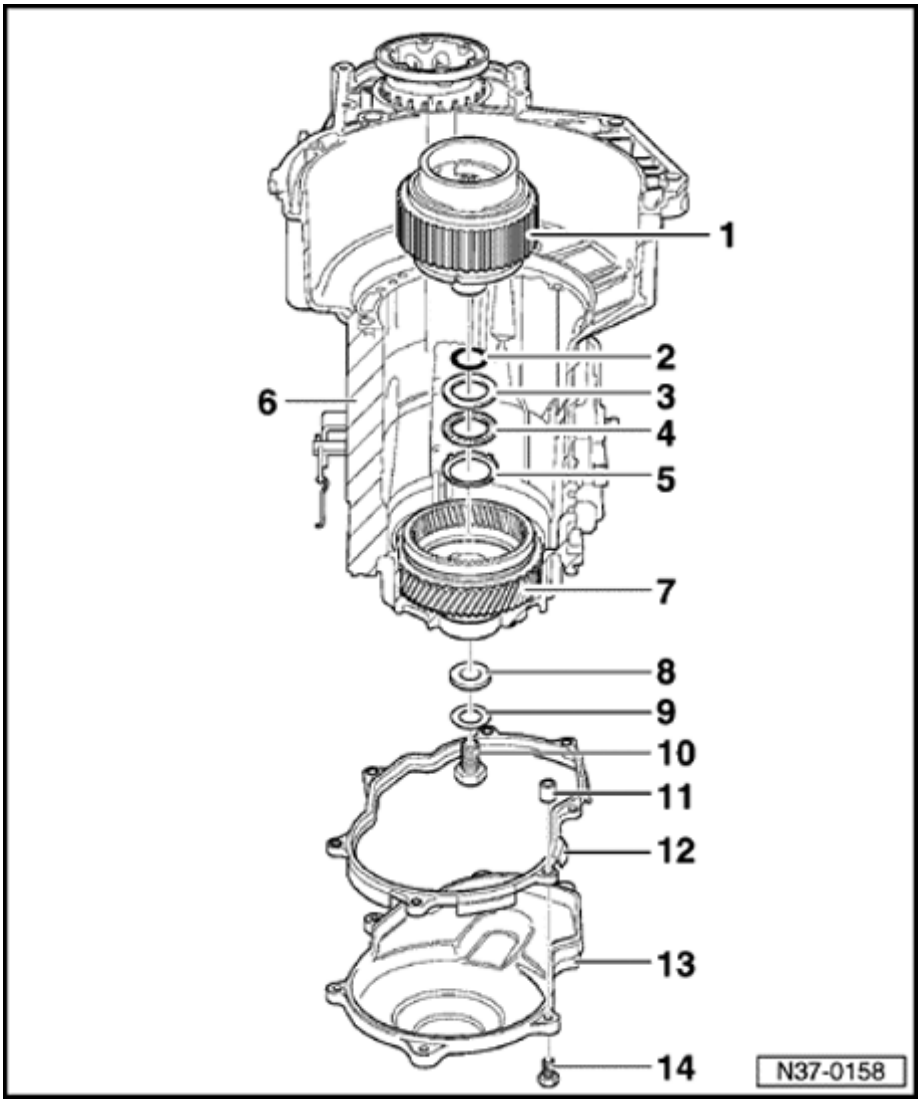

7 - Input gear

- Do not remove to disassemble planetary transmission
- Removing and installing input gear or axial needle bearing for planet carrier ⇒ Page 39-8

8 - Planet carrier shim

- Determining thickness, Adjusting planet carrier, ⇒ Page 37-91

9 - Washer

10 - Bolt, 30 Nm (22 ft lb)

- For small input shaft

11 - Spacer bushing

- Clip qty. 7 into gasket

12 - Gasket

- Always replace

13 - Cover

14 - Bolt, 8 Nm (70 in. lb)

Planetary transmission, disassembling and assembling

Disassembling

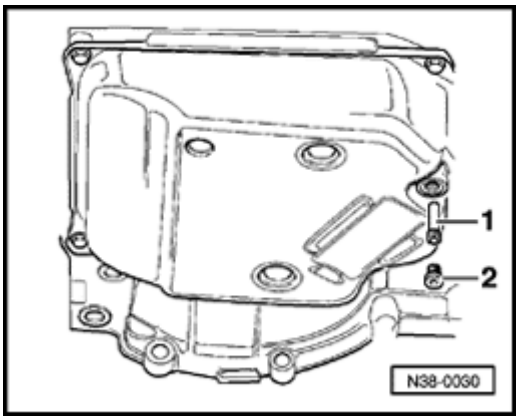

- Remove ATF level plug -2- and overflow tube -1-.
- Seal ATF cooler connections.
- Take out torque converter.

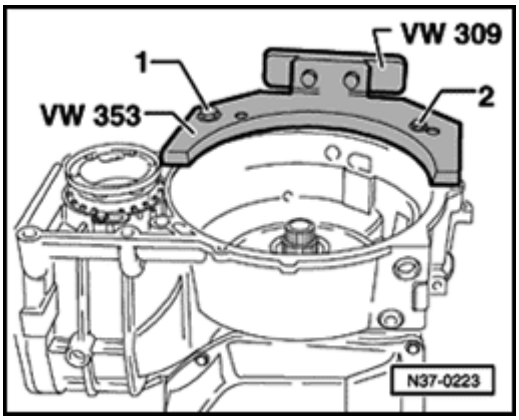

- Secure transmission to assembly support with bolts -1- and -2-.

37-72

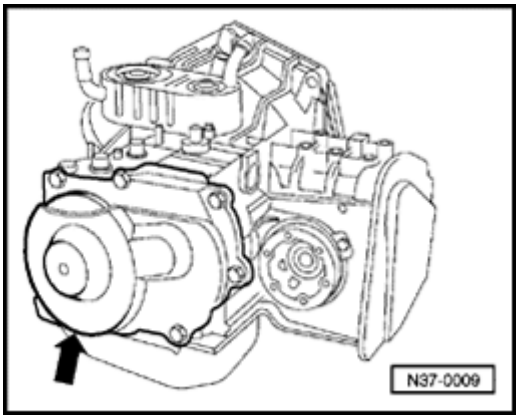

- Remove transmission housing cover with gasket (arrow).

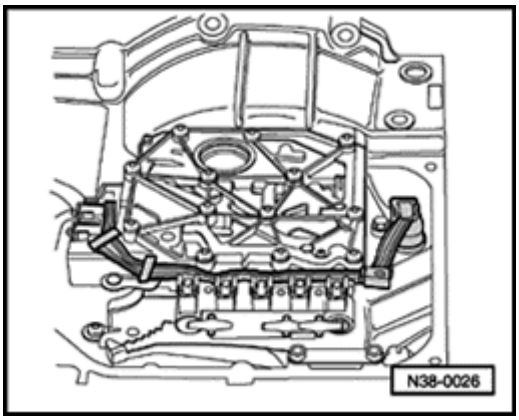

- Remove sump.
- Remove ATF screen.
- Remove valve body with conductor strip ⇒ Page 38-20 .

37-73

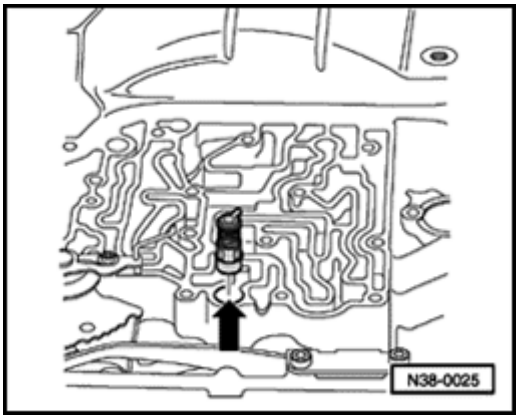

- Remove sealing plugs for -B1-.

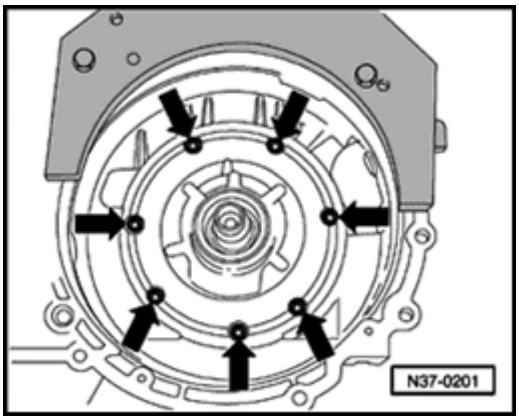

- Remove ATF pump bolts (arrows).

37-74

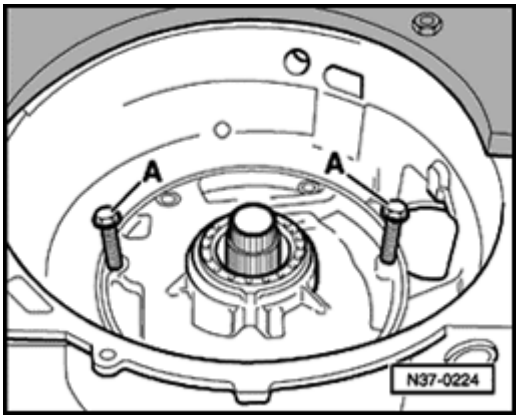

- Thread bolts -A- (M8) into the tapped holes of ATF pump.
- Press ATF pump off by turning bolts -A- evenly.

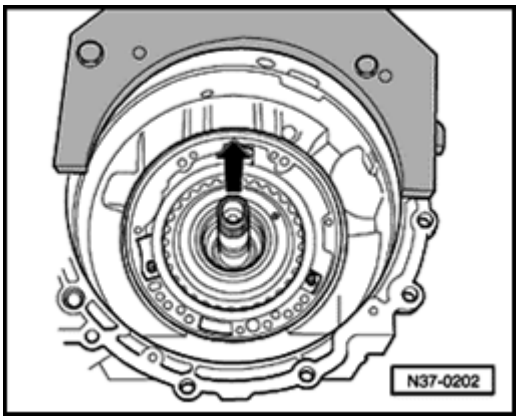

- Take out all clutches with supporting tube, -B2- plates, springs and spring caps together.

37-75

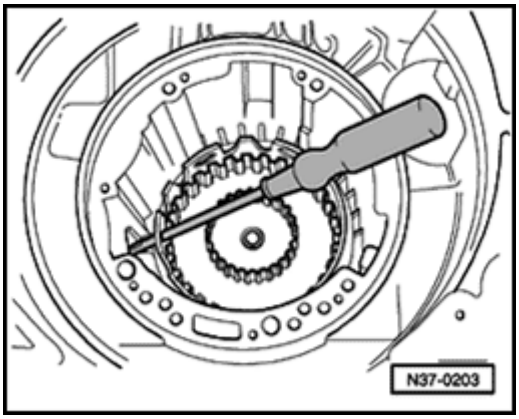

- Insert screwdriver through hole of large sun gear to loosen and tighten bolt for small drive shaft.

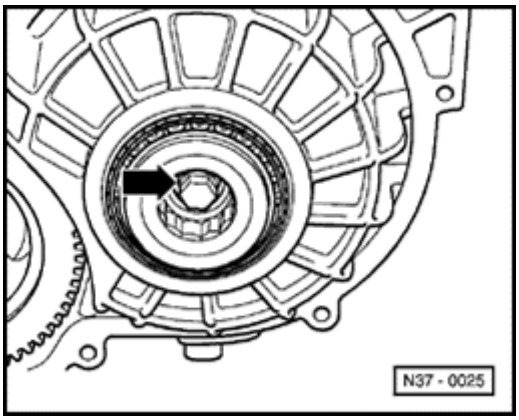

- Loosen small drive shaft bolt (arrow).
- Remove small drive shaft bolt, washer and shim.

  Planet carrier axial needle bearing remains in transmission/input gear.
- Pull out small drive shaft.

37-76

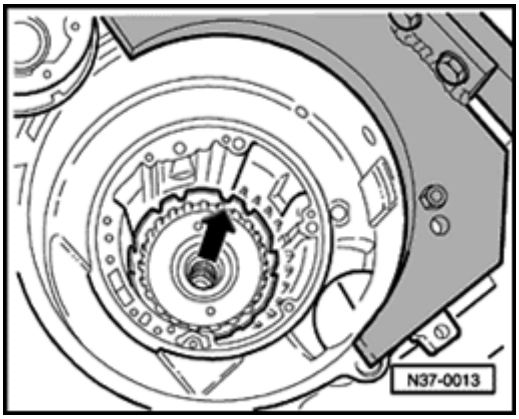

- Pull out large drive shaft (arrow).

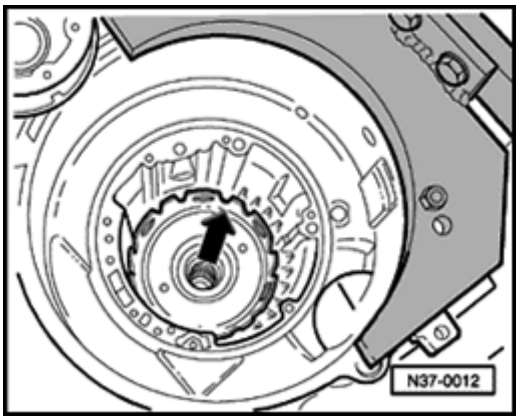

- Pull out large sun gear (arrow).

37-77

- Before removing free wheel remove Transmission Vehicle Sensor (VSS) -G38- ⇒ Page 01-18 , ⇒ Fig. 10

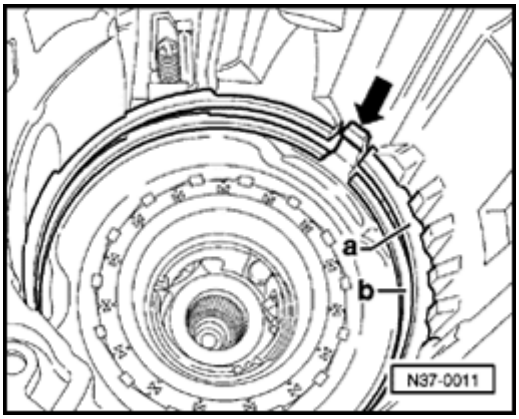

- Remove supporting tube circlip -a- and free wheel circlip -b-.
- Take free wheel out of housing by pulling on free wheel retaining wedge (arrow) with pliers.

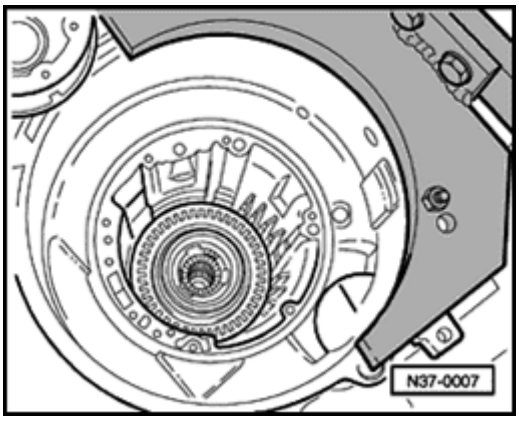

- Pull out planet carrier with dished spring.
- Remove reverse gear brake -B1- plates.

Note:

- *It is not necessary to remove input gear to disassemble planetary transmission. Removing and installing input gear ⇒ Page 39-8 .*
- *Assembling planetary transmission ⇒ Page 37-78 .*

37-78

Assembling

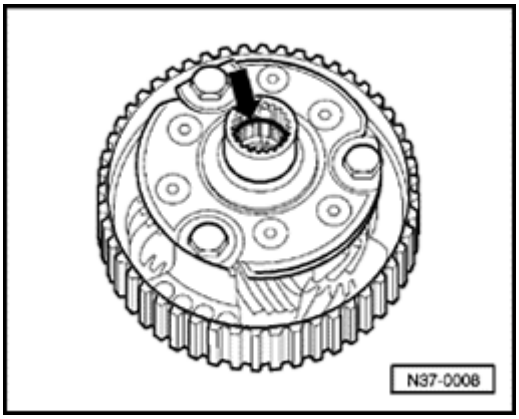

- Install O-ring into planet carrier.

Note:

After replacing planet carrier, adjust ⇒ *Page 37-91* .

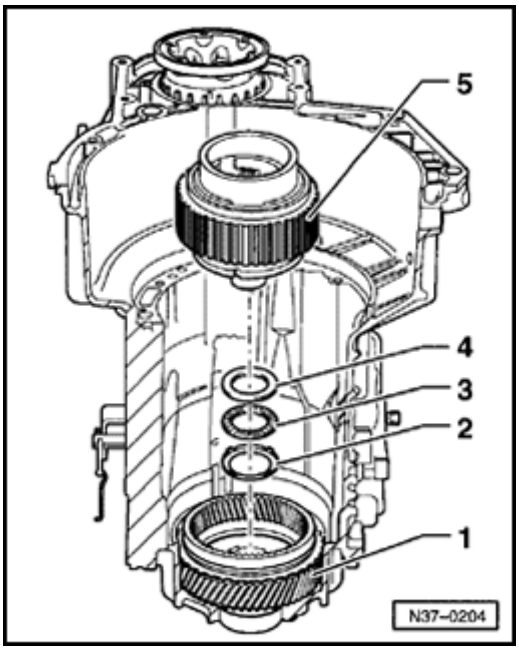

- Install axial needle bearing with washers in input gear.

1 - Input gear is installed in transmission housing ⇒ Page 37-59 .

2 - Axial needle bearing washer, install smooth side into input gear.

3 - Axial needle bearing

4 - Axial needle bearing washer

5 - Planet carrier with seal installed

37-79

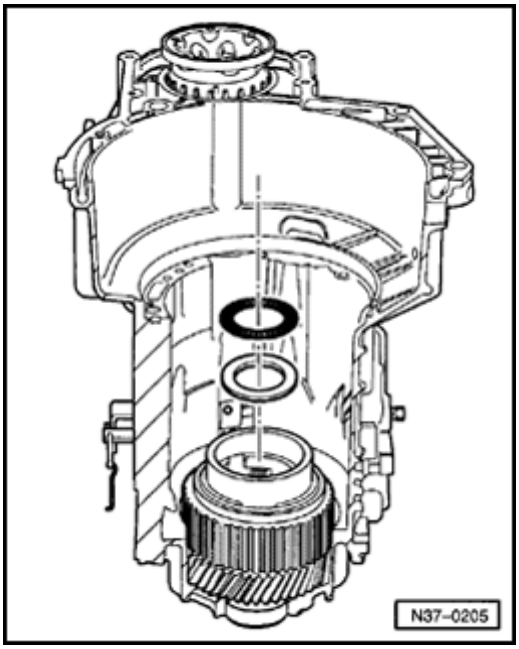

- Place washer and axial needle bearing on small sun gear in planet carrier.
- Centralize washer and axial needle bearing in small sun gear.

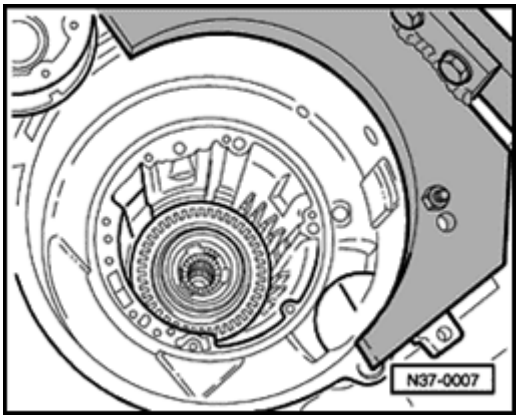

- Install inner and outer-B1- plates.
- Install pressure plate with flat side facing plates.

Thickness of pressure plate varies according to number of plates ⇒ Page 37-68 .

- Install dished washer with convex side facing toward free wheel.

37-80

Note:

When replacing

- *Transmission housing*
- *Free wheel*
- *Piston for reverse gear brake -B1-*
- *or plates*

then adjust -B1-, ⇒ *Page 37-99* .

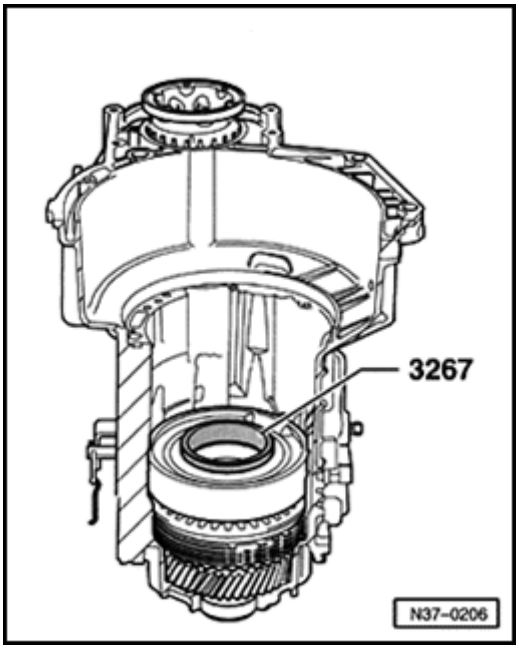

- Preload free wheel rollers with 3267 and insert free wheel.

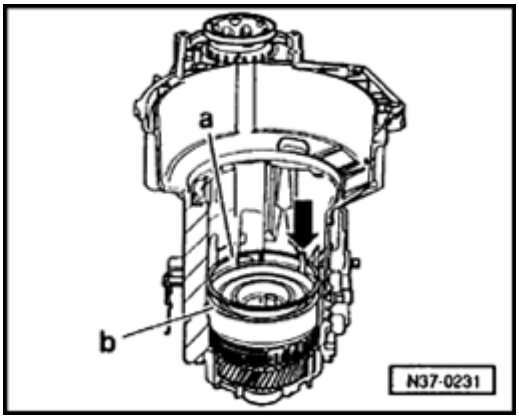

- Install circlip for free wheel -b- and circlip for supporting tube -a-.
  - Insert circlip gaps over free wheel retaining wedge (arrow).
  - Install Transmission Vehicle Speed Sensor -G38 ⇒ Page 01-18 , Fig. 10
  - Perform check measurement of -B1- ⇒ Page 37-105

37-81

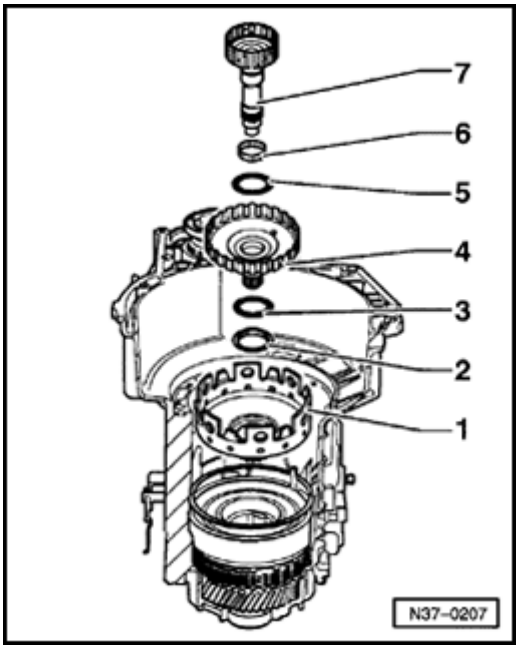

- Install components into housing starting with large sun gear down to small input shaft.

1 - Large sun gear

2 - Needle bearing washer

(collar faces to large sun gear)

3 - Axial needle bearing

4- Large drive shaft

5 - Axial needle bearing

6- Needle bearing

7 - Small drive shaft

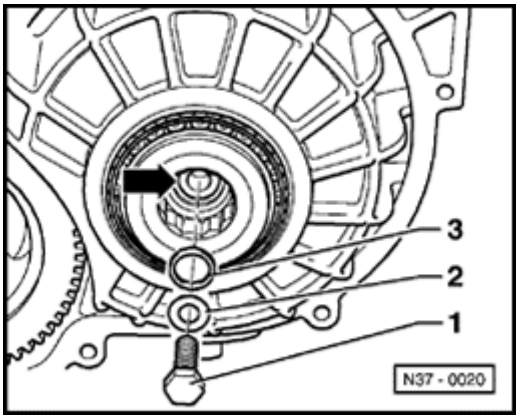

- Install small drive shaft bolt -1- with washer -2- and shim -3-
  - Tightening torque: 30 Nm (22 ft lb)

Note:

- *Install shim -3- onto small drive shaft shoulder (arrow).*
- *Determining shim thickness, adjusting planet carrier, ⇒ Page 37-91 .*

- Perform planet carrier check measurement ⇒ Page 37-98

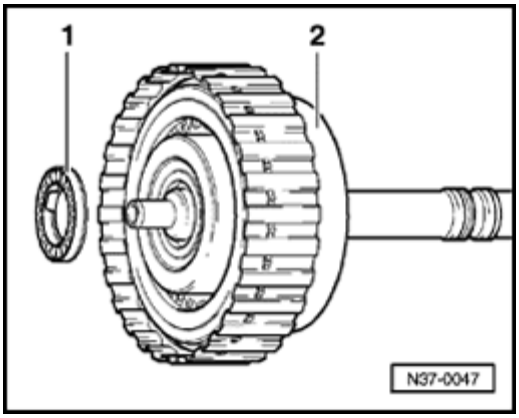

- Install axial needle bearing with washer on 4th gear clutch -K3-.

1 - Axial needle bearing with washer

Moisten axial needle bearing washer with ATF so that bearing, when installed, sticks to -K3-. Install bearing washer on-K3-.

2 - 4th gear clutch -K3-

37-83

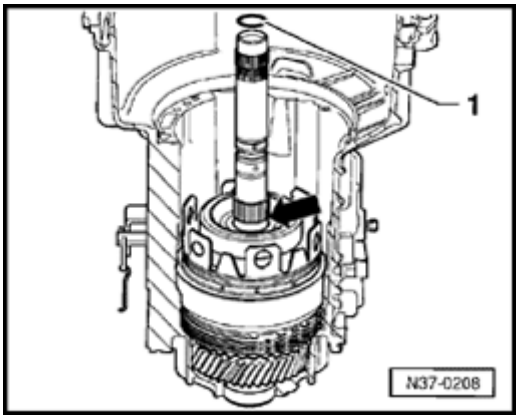

- Install 4th gear clutch -K3-.
- Fit seal -1- in the groove (arrow).

Note:

Ensure piston rings seat correctly.

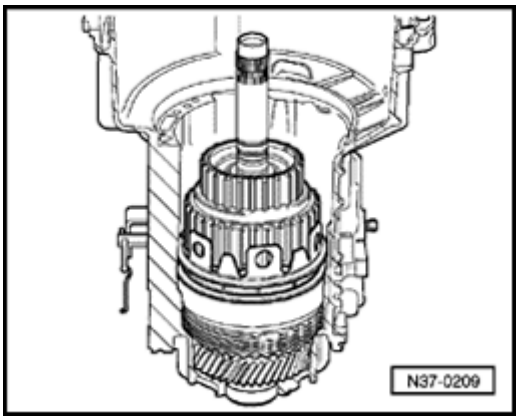

- Install 1st to 3rd gear clutch -K1-.

37-84

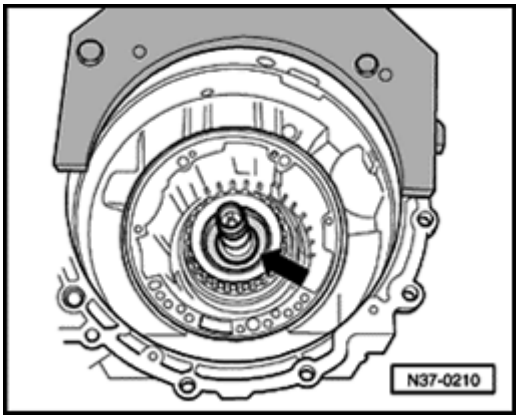

- Install shims (arrow) in -K1-.

Note:

- *Remeasure shim when replacing - 1-, - 2- or ATF pump adjusting clutch play between - 1- and - 2-, ⇒ Page 37-106 .*
- *1 or 2 shims can be installed.*

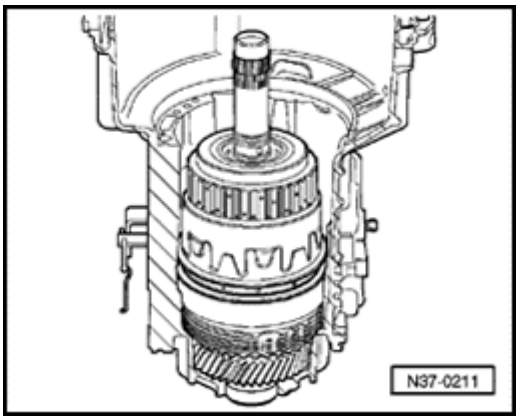

- Install reverse gear clutch -K2-.
- Install supporting tube for -B2- plate set (arrow) so that supporting tube groove engages in free wheel wedge.

37-85

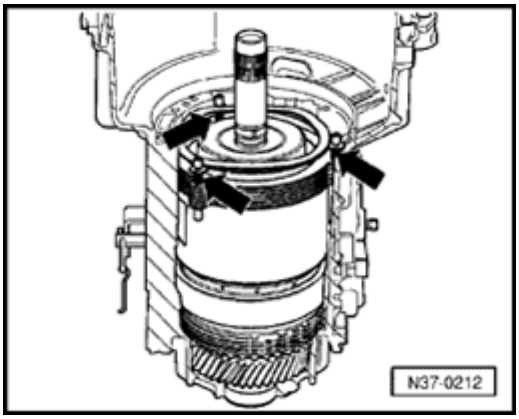

- Install -B2- plates as follows:
  - First install a 3 mm thick outer plate
  - Install three spring caps in outer plate
  - Install compression springs (arrows)
  - Install all but the last outer plate

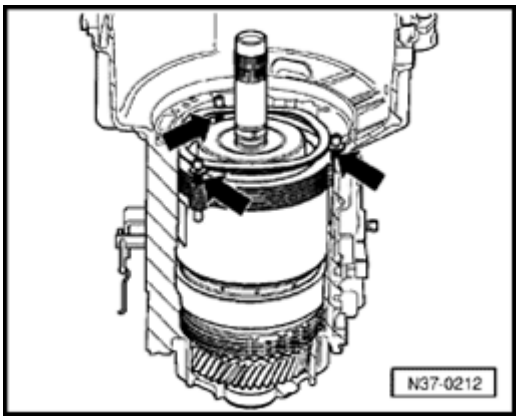

- Before installing the last (measured) outer plate, place three spring caps onto compression springs.
- Replace corrugated washer.

Note:

When replacing

- *Supporting tube*
- *ATF pump*
- *or plates*

the 2nd and 4th gear brakes -B2- are to be adjusted, ⇒ *Page 37-113* .

- Replace ATF pump seal.

- Install O-ring on ATF pump.

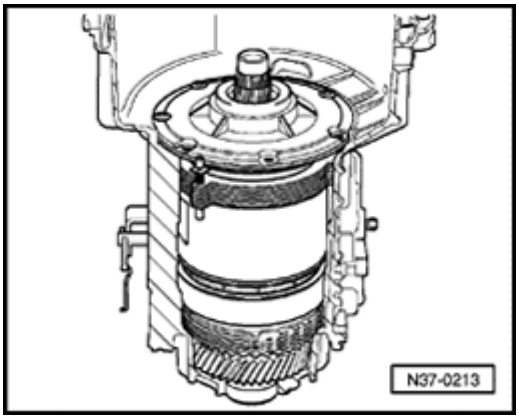

- Install ATF pump.
- Tighten bolts evenly in a crosswise pattern.

Note:

- *Ensure that the O-ring is not damaged.*
- *Tightening torque: 8 Nm (70 in lb) plus an additional $^{1}/_{4}$ turn (90°). Additional turn can be done m several stages.*

- Perform check measurement of clutch play ⇒ Page 37-112 .
- Install sealing plugs, valve body and oil pan ⇒ Page 38-20 .
- Install cover with gasket and spacer bushings.

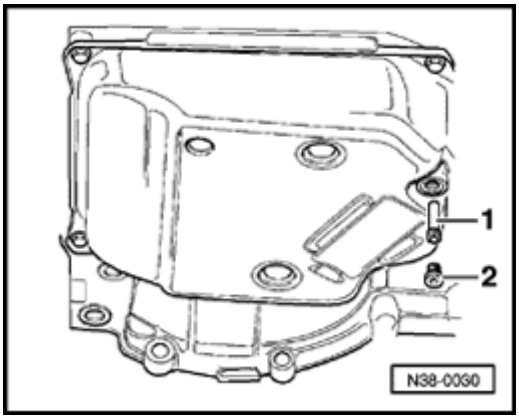

- Install ATF overflow tube -1- and level plug -2-.

Transmission, removing and installing

Vehicles with 6 cylinder engines

When removing, note the following:

- Mark bolts connecting engine and transmission

If the transmission has not been replaced:

- Make sure the engine/transmission connecting bolts are reinserted in the same position.

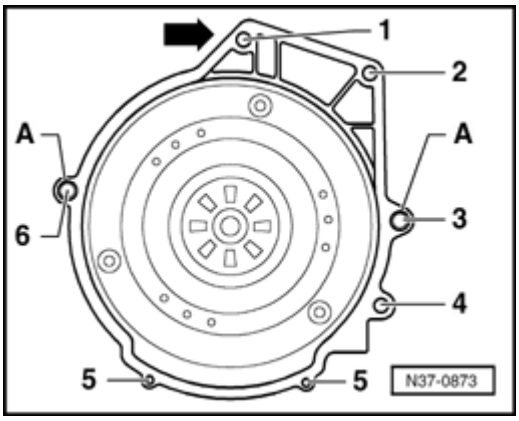

Flange thickness (arrow): 55 mm

Pos.	Bolt	Nm
1	M 12x80	80
2	M 12x55[1)]	80
3	M 12x58	80
4	M 12x46	80
5[2)]	M 7x12	15
6	M 12x58	80

Pos. A = Fitting sleeve for centering purposes

1) Hex bolt with M8 x 10 threaded pin

2) Transmission cover

37-88

When installing a new transmission, note the following:

Note:

When installing a new transmission, pay special attention to the length of the engine/transmission connecting bolts.

The flange thickness of new transmissions is 25 mm less than before (arrow) and the connecting bolts have been modified.

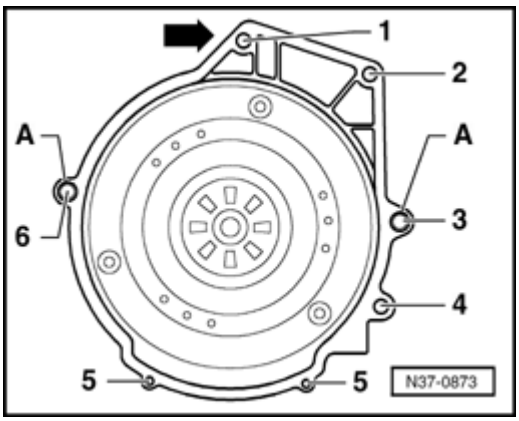

Flange thickness (arrow): 30 mm

Pos.	Bolt	Nm
1[1)]	M 12x55	80
2	M 12x55[2)]	80
3	M 12x55	80
4	M 12x55	80
5[3)]	M 7x12	15
6[4)]	M 12x65	80

Pos. A = Fitting sleeve for centering purposes

1)Bolts that are too long will damage the cylinder block as they are screwed in.

2) Hexagonal bolt with M8 x 10 threaded pin

3) transmission cover

4) Bolts that are too short will damage the thread in the transmissionas they are screwed in.

37-89

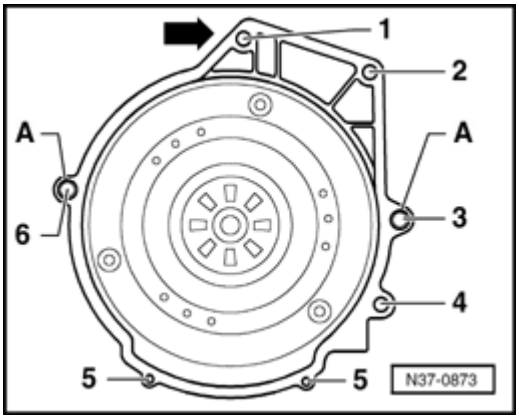

- When installing a new transmission with a modified flange, modified bolts must be used at positions 1, 4, and 6.

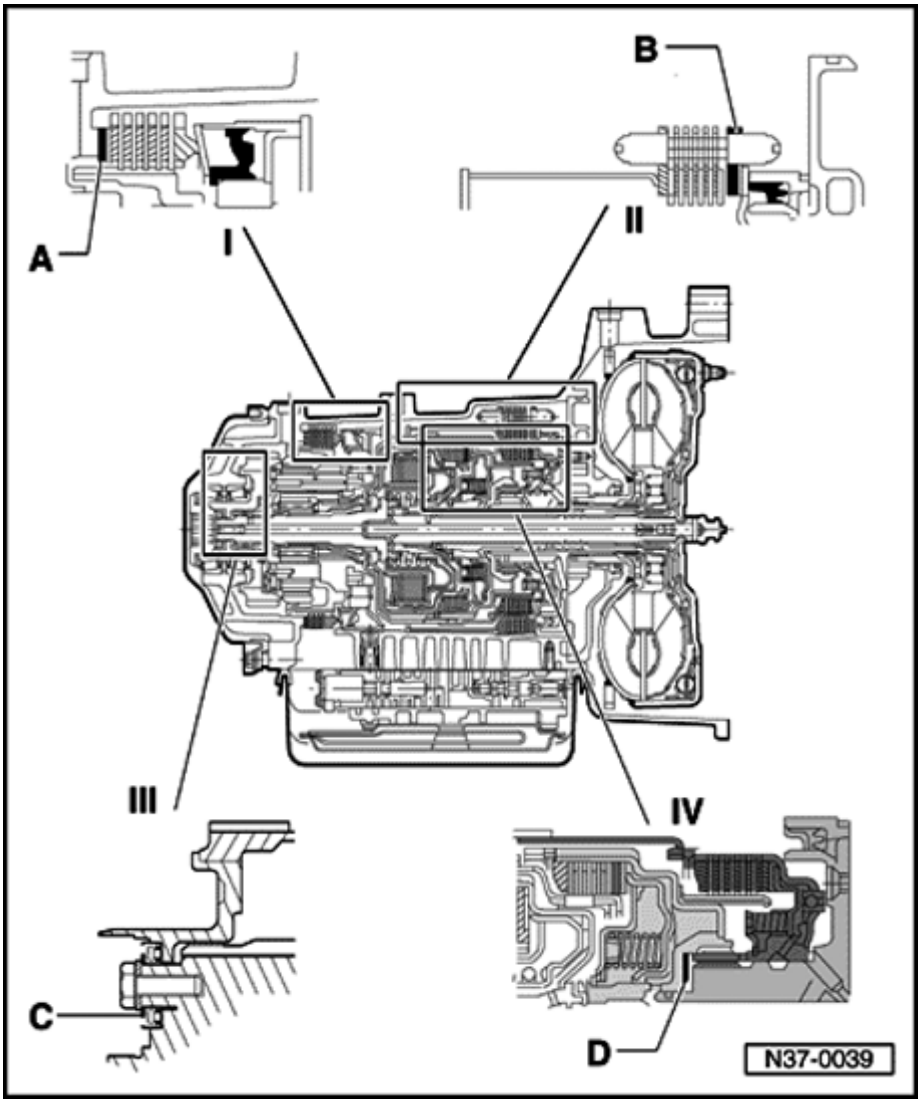

Planetary transmissionadjustme overview

---- **I Reverse gear brake**

- A - Shim
- Determining thickness, adju reverse gear brake -B1-, ⇒ 37-99

---- **II 2nd and 4th gear brake**

- B - Outer plate
- Determining thickness, adju 2nd and 4th gear brake -B2- Page 37-113

---- **III Planet carrier**

- C - Shim
- Determining thickness, adju planet carrier, ⇒ Page 37-9

---- **IV Clutch play**

- D - Shim
- Determining thickness, adju clutch play between -K1- an K2-, ⇒ Page 37-106

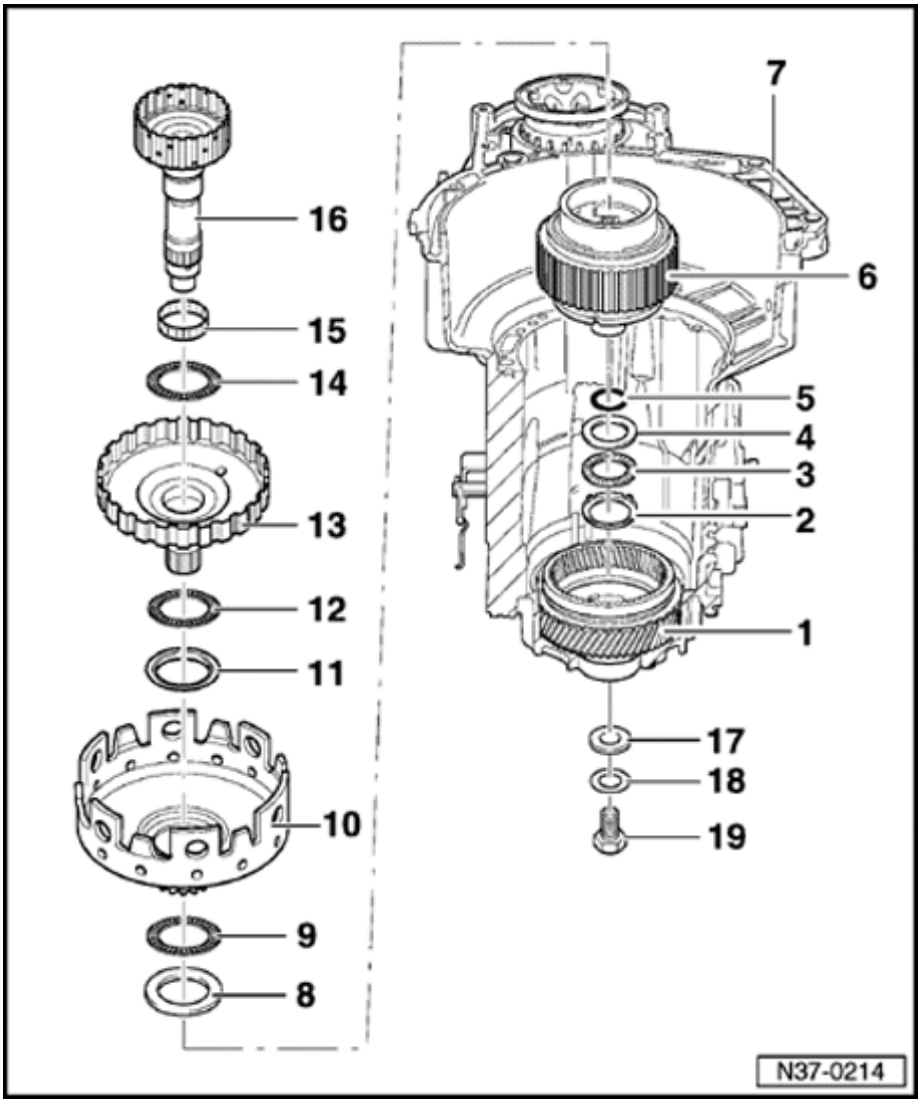

Planet carrier, adjusting

Overview of components to adjust planet carrier

- When adjusting planet carrier install components in housing without shim (item17).

1 - Input gear

- Do not remove to adjust planet carrier
- Removing and installing input gear or axial needle bearing for planet carrier ⇒ Page 39-8

2 - Axial needle bearing washer

- Install smooth side in input gear

3 - Axial needle bearing

4 - Axial needle bearing washer

5 - O-ring

- Insert into planet carrier, Assembling planet carrier, ⇒ Page 37-78

37-92

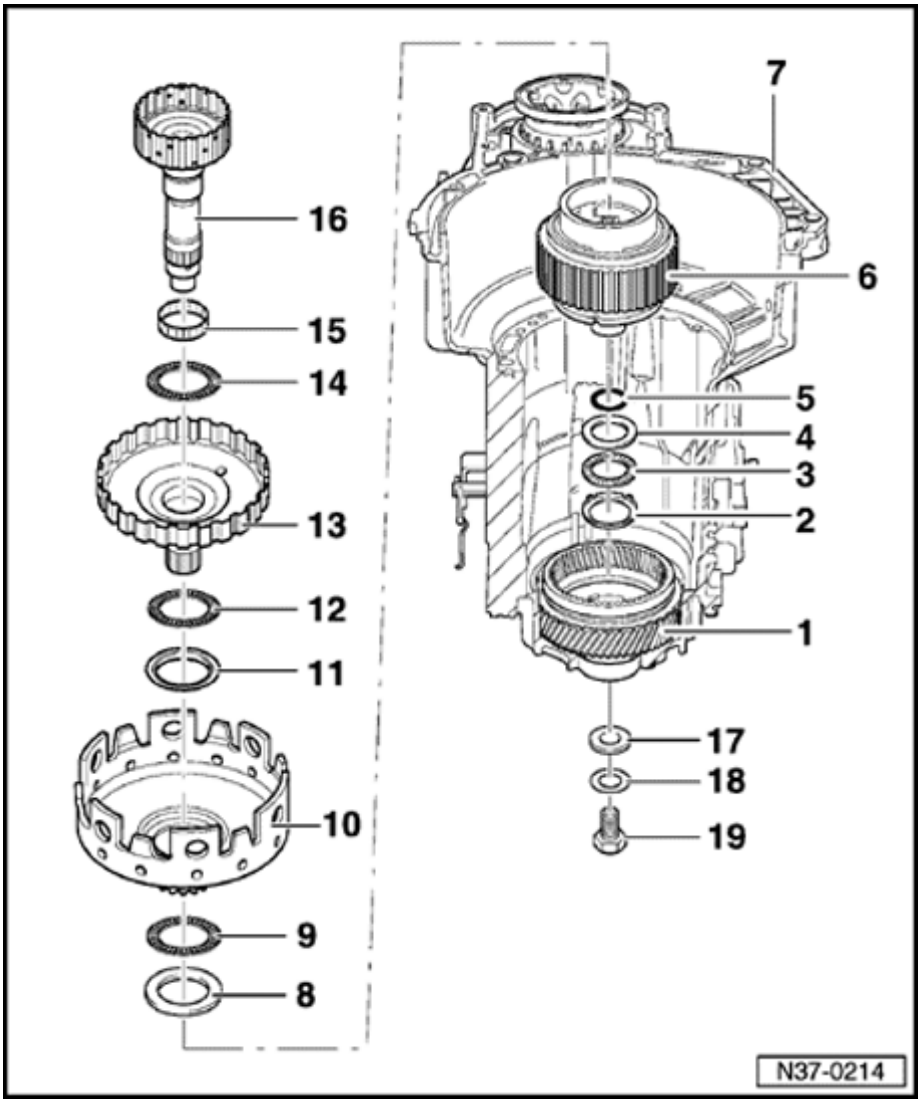

6 - Planet carrier

7 - Transmission housing

- With input gear and axial needle bearing
- Axial needle bearing remains in input gear
- If axial needle bearing is damaged, Removing and installing input gear, ⇒ Page 39-8

8 - Washer

9 - Axial needle bearing

10 - Large sun gear

11 - Washer

- Insert into large sun gear, Assembling planetary transmission, ⇒ Page 37-78

12 - Axial needle bearing

13 - Large drive shaft

14 - Axial needle bearing

15 - Needle bearing

16 - Small drive shaft

37-93

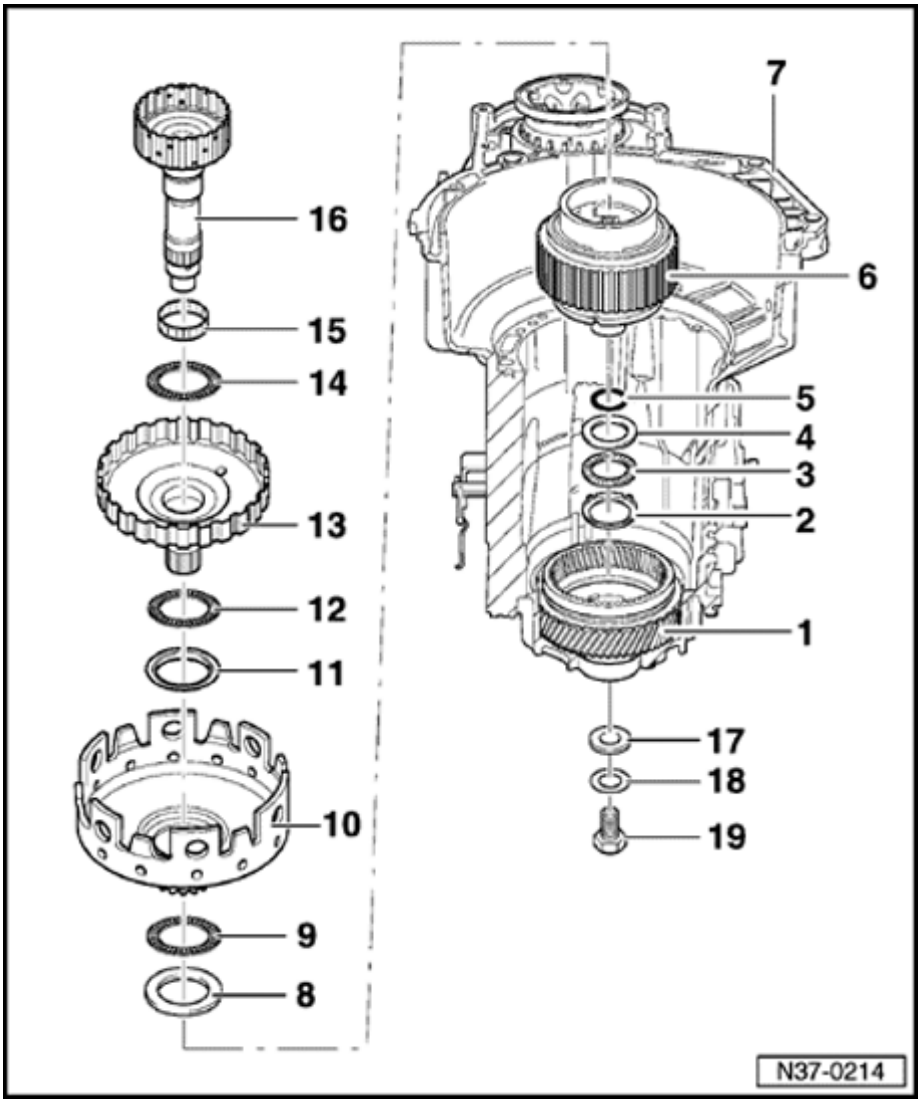

17 - Shim

- Do not install in planet carrier when adjusting

18 - Washer

19 - Small drive shaft bolt, 30 Nm (22 ft lb)

37-94

Determining shim -A-

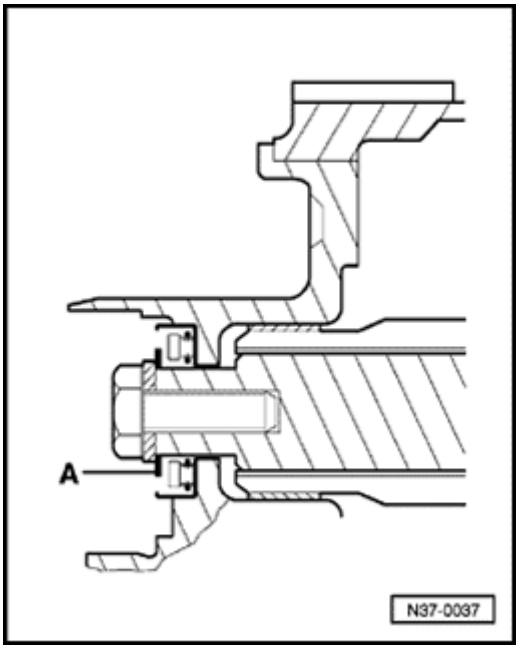

- Install all components (items 2 to 16) to adjust planet carrier into transmission housing ⇒ Page 37-91 .

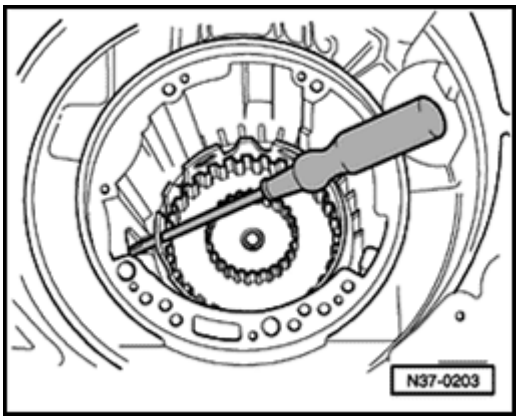

- Insert screwdriver through hole of large sun gear to loosen and tighten bolt for small drive shaft.

37-95

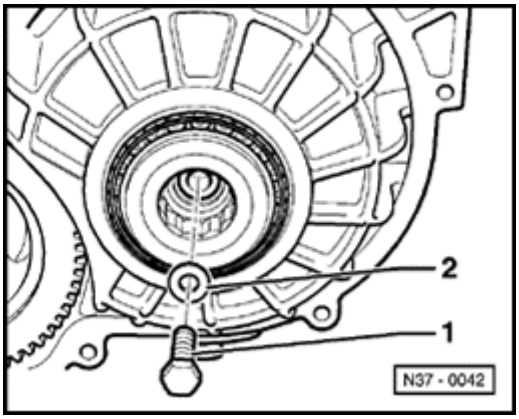

- Install small drive shaft bolt -1- with washer -2- but without shim. Tightening torque: 30 Nm (22 ft lb).

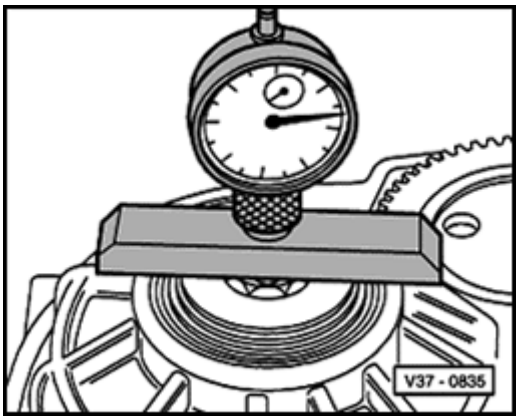

- Set up dial gauge so that top of gauge is positioned on bolt head center with 1 mm preload.
- Zero dial gauge.
- Move small drive shaft up and take reading.

Example: Reading 2 mm

- Specify thickness of shim according to table and determine Part No. from parts catalog.

Table of shims

Gauge reading (mm)	Shims (mm)
1.26 (1.35)	1.0
1.36 (1.45)	1.1
1.46 (1.55)	1.2
1.56 (1.65)	1.3
1.66 (1.75)	1.4
1.76 (1.85)	1.5
1.86 (1.95)	1.6
1.96 (2.05)	1.7
2.06 (2.15)	1.8
2.16 (2.25)	1.9
2.26 (2.35)	2.0
2.36 (2.45)	2.1
2.46 (2.55)	2.2
2.56 (2.65)	2.3
2.66 (2.75)	2.4
2.76 (2.85)	2.5
2.86 (2.95)	2.6
2.96 (3.05)	2.7
3.06 (3.15)	2.8
3.16 (3.25)	2.9

37-97

Example:

Measurement 2.00 mm -

Insert 1.7 mm thick shim.

- Remove small drive shaft bolt.

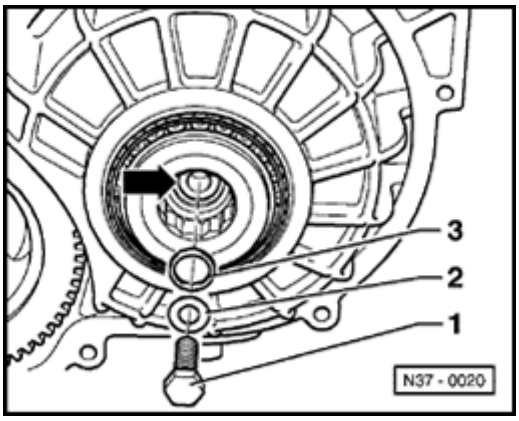

- Insert correct shim -3- on small drive shaft (arrow).
- Tighten small drive shaft bolt -1- with washer -2-. Tightening torque 30 Nm (22 ft lb).
- Perform planet carrier check measurement.

37-98

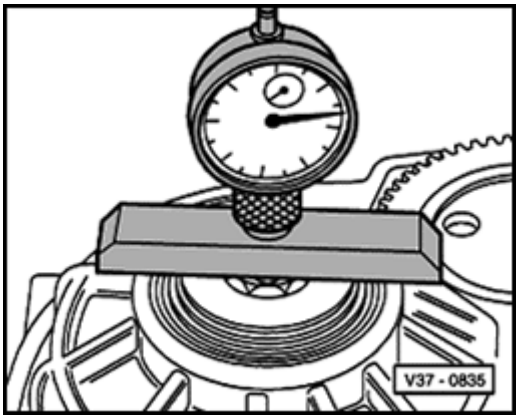

Planet carrier check measurement

- Insert dial gauge in VW 382/7 and place tip on bolt of small drive shaft.
- Move small drive shaft up and down and take reading of play on dial gauge.

Play:

min. 0.23 mm

max. 0.37 mm

Note:

If the planet carrier has been adjusted with reverse gear brake -B1- and free wheel removed then before installing planet carrier install reverse gear brake -B1-, Assembling planetary transmission, ⇒ *Page 37-78* .

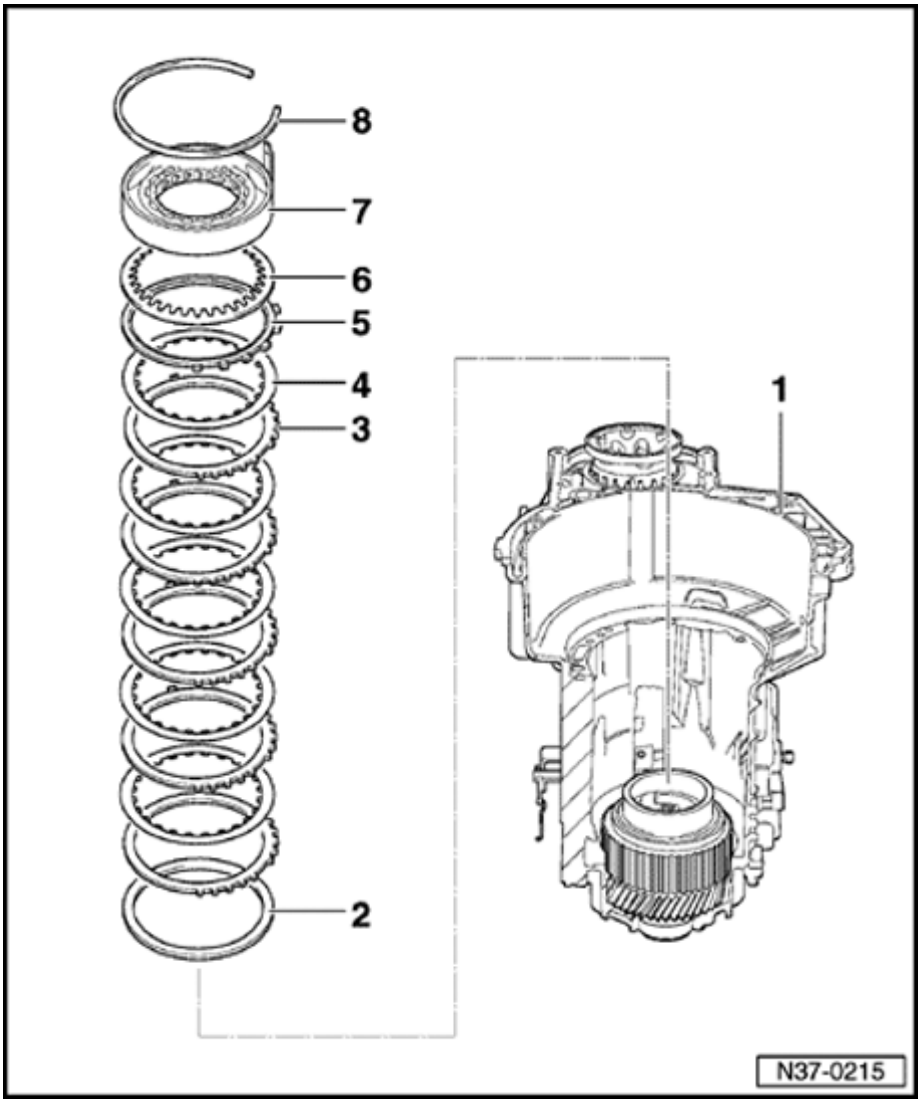

Reverse gear brake - B1-, adjusting

Overview of components to adjust reverse gear brake - B1-

1 - Transmission housing

- With input gear and planet carrier installed

2 - Shim

3 - Outer plate -B1-

- Quantity ⇒ Page 00-6

4 - Inner plate -B1-

- Quantity ⇒ Page 00-6

5 - Pressure plate

- Install with flat side facing plates
- Different thicknesses depending upon the number of inner plates installed

Transmission with 4 inner plates

- 13.5 mm

Transmission with 5 inner plates

- 10.5 mm

37-100

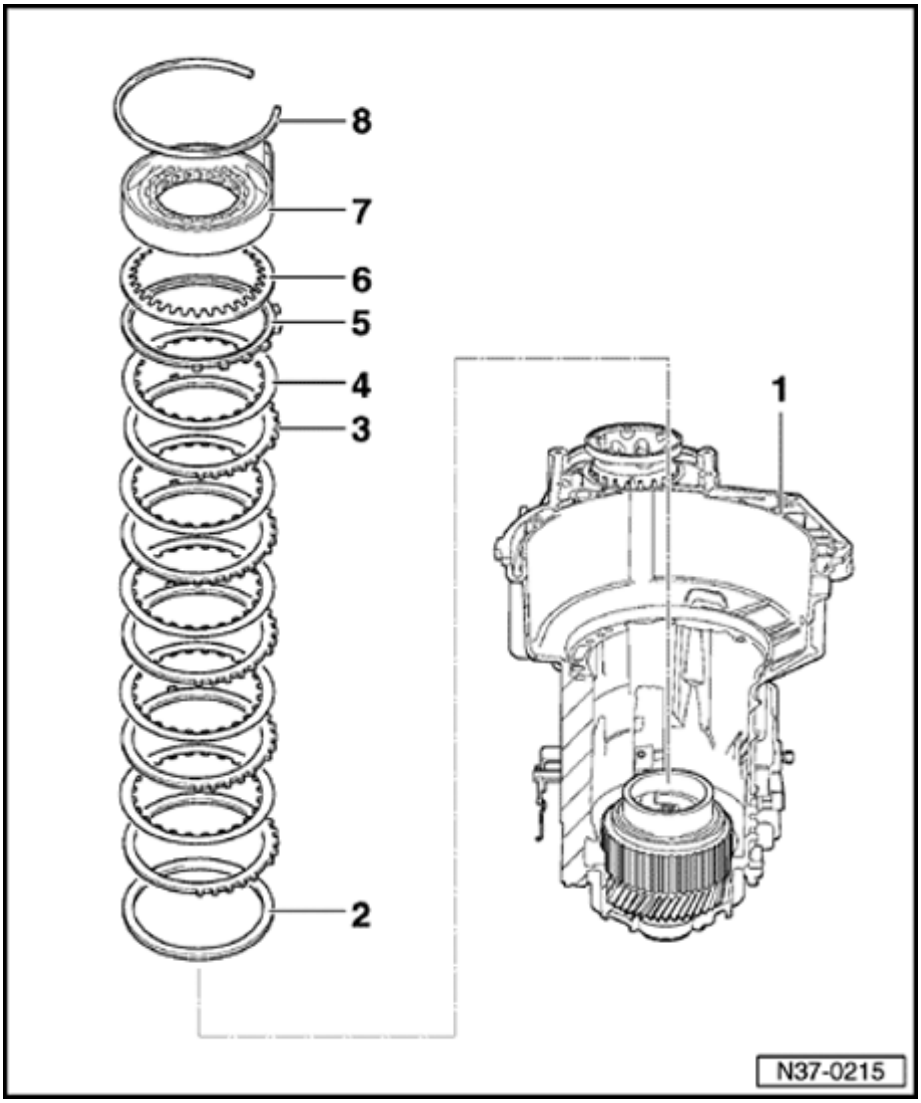

6 - Dished washer

- Convex side faces toward free wheel

7 - Free wheel with -B1- piston

Note:

Before removing or installing free wheel remove valve body and take out sealing plugs ⇒ Page 38-20 , also remove Transmission Vehicle Speed Sensor -G38- ⇒ Page 01-18 , Fig. 10.

8 - Circlip

37-101

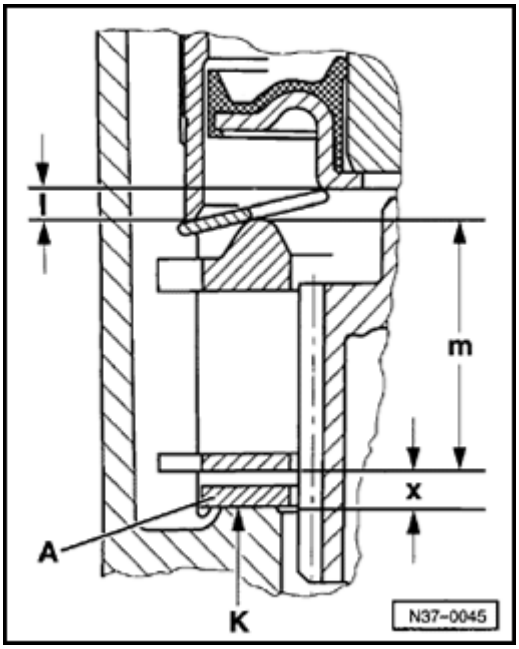

Determining shim -A- thickness

Shim thickness is determined by gap "x" and selected from table, ⇒ Page 37-104 .

x = K + I/2 - m

- A = Shim
- x = Gap
- I = Position of piston in free wheel
- m = Height of plate set including pressure plate
- K = Constant = 26.8 mm

  "K" is determined by installation height in transmission housing and is not adjustable.

37-102

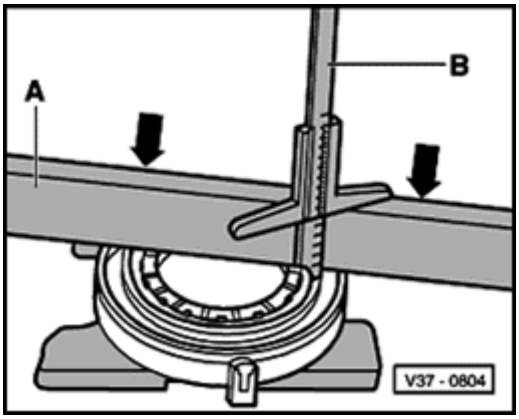

Calculating l :

- Press piston in direction of arrow as far as stop.
- Place straightedge "A" onto outer race of free wheel.
- Measure to inner edge of piston with depth gauge "B".

Example:

Reading	=	51.8 mm
- Straightedge	=	-48.2 mm
Calculated size l	=	3.6 mm

37-103

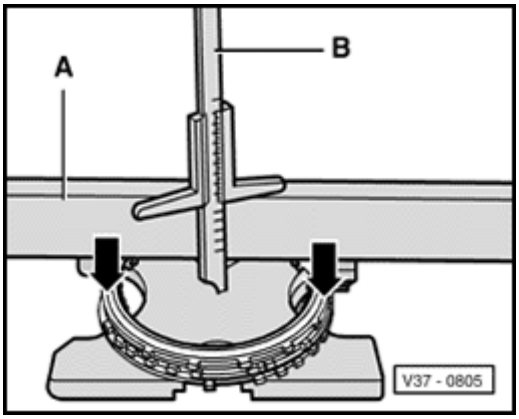

Calculating m :

- Place straightedge "A" on thrust plate.
- Compress set of plates including pressure plate in direction of arrow and measure the thickness of plate set with depth gauge"B".

Example:

Reading	=	73.5 mm
- Straightedge	=	-48.2 mm
Calculated size m	=	25.3 mm

x = K + (1 B 2) - m

x = 26.8 + (3.6 B 2) - 25.3

x = 26.8 + 1.8 -25.3

x = 3.3

- Determine size of shims according to table:

Table of shims

Gap "x" (mm)	Shims (mm)
2.36 ... 2.45	1.0
2.46 ... 2.55	1.1
2.56 ... 2.65	1.2
2.66 ... 2.75	1.3
2.76 ... 2.85	1.4
2.86 ... 2.95	1.5
2.96 ... 3.05	1.6
3.06 ... 3.15	1.7
3.16 ... 3.25	1.8
3.26 ... 3.35	1.9
3.36 ... 3.45	1.0 + 1.0
3.46 ... 3.55	1.0 + 1.1
3.56 ... 3.65	1.1 + 1.1
3.66 ... 3.75	1.1 + 1.2
3.76 ... 3.85	1.2 + 1.2
3.86 ... 3.95	1.2 + 1.3
3.96 ... 4.05	1.3 + 1.3
4.06 ... 4.15	1.3 + 1.4
4.16 ... 4.25	1.4 + 1.4

- Determine thickness of shims according to table and obtain Part No. from parts catalog.

- After determining shim for -B1- perform check measurement.

Reverse gear brake -B1- check measurement

- Install parts up to free wheel and secure with circlip, Assembling planetary transmission, ⇒ Page 37-78 .

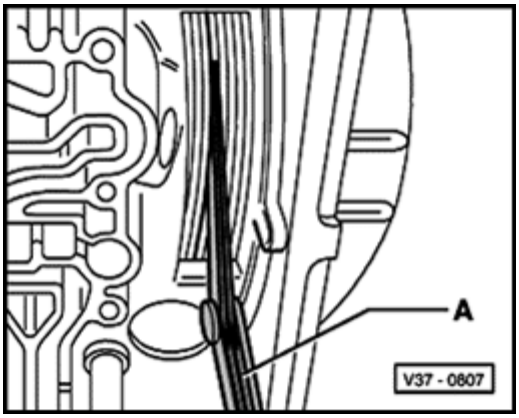

- Measure play between plates with feeler gauge "A".

Play:

min. 1.20 mm

max. 1.80 mm

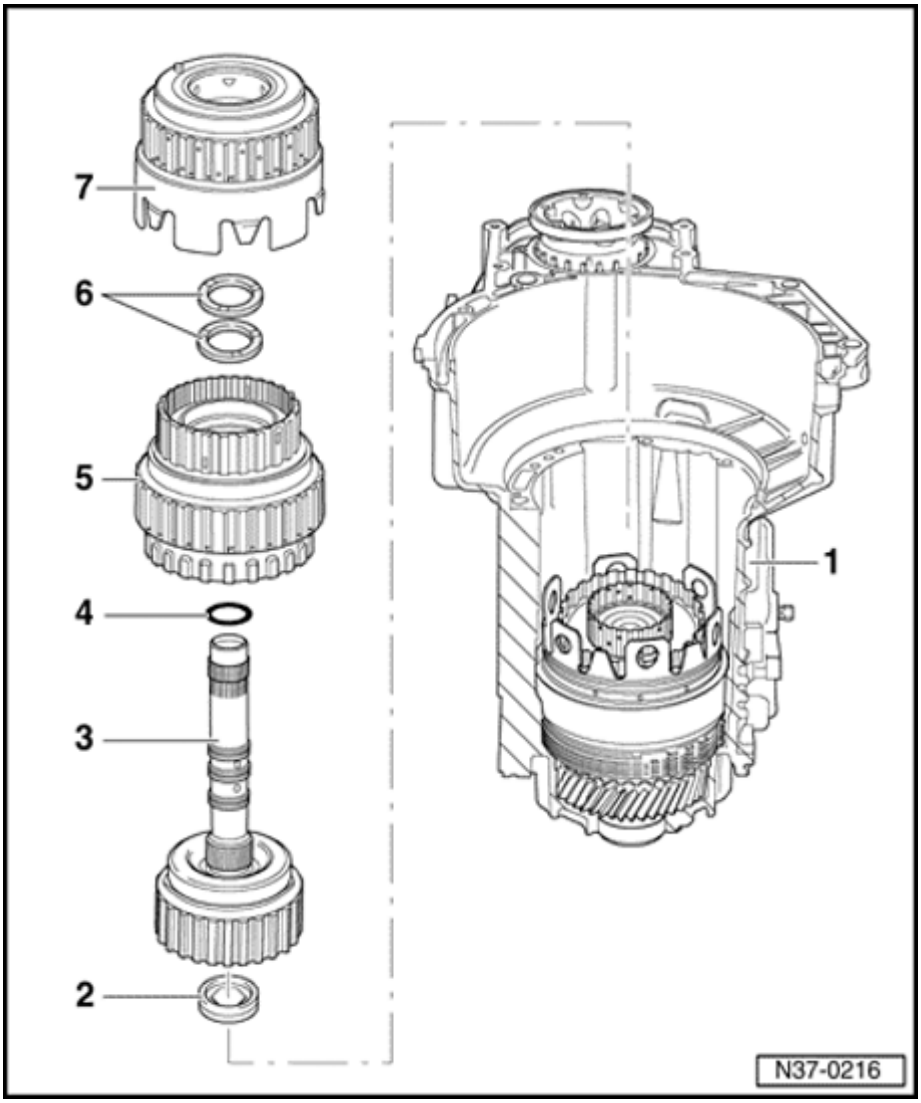

Clutch play between -K1- and -K2-, adjusting

- To adjust clutch play install components without shim (item 6) Assembling planetary transmission, ⇒ Page 37-78 .

1 - Transmission housing

- Planetary transmission installed up to small drive shaft, assembling planetary transmission, ⇒ Page 37-78

2 - Axial needle bearing with washer

- Axial needle bearing faces toward small input shaft
- Washer faces toward -K3-

3 - 4th gear clutch -K3- with pump shaft

4 - O-ring

5 - 1st to 3rd gear clutch -K1- with turbine shaft

37-107

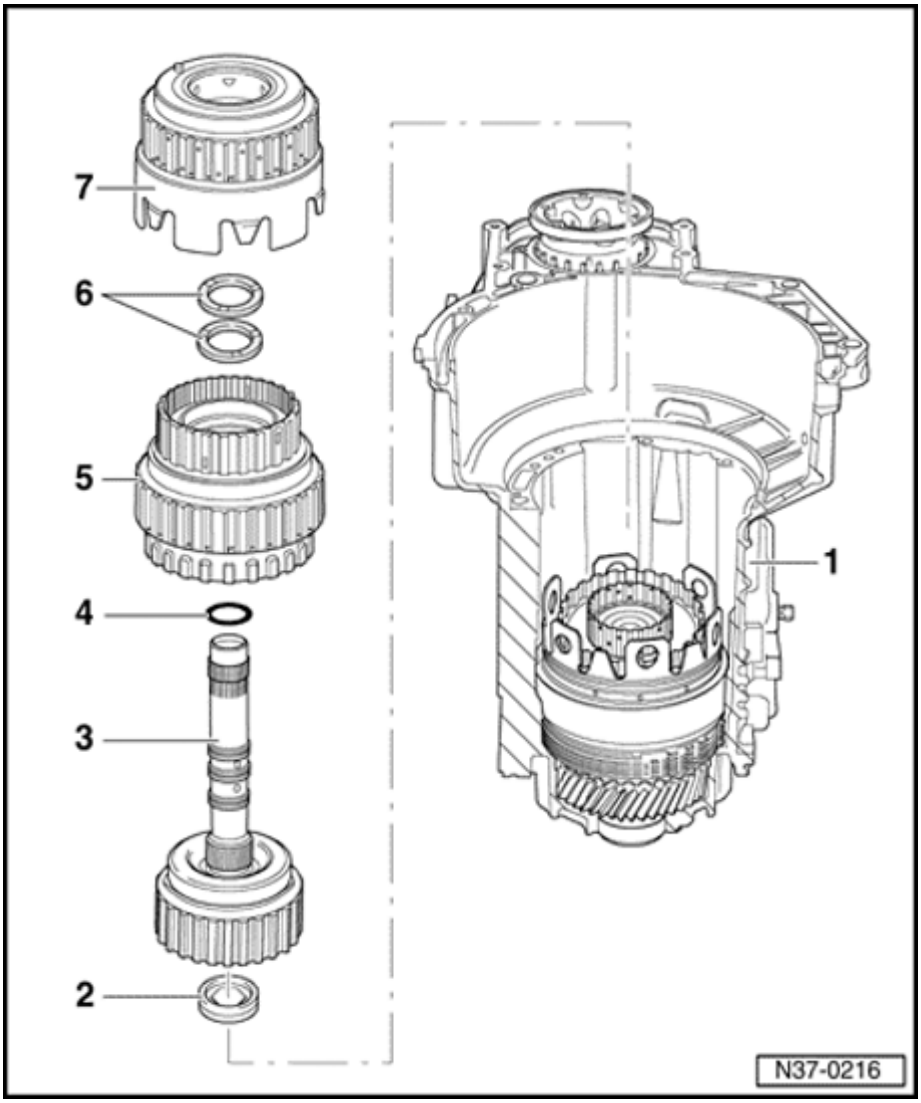

6 - Shim

- Do not install when adjusting clutch play
- 1 or 2 shims can be installed

7 - Reverse gear clutch - K2-

37-108

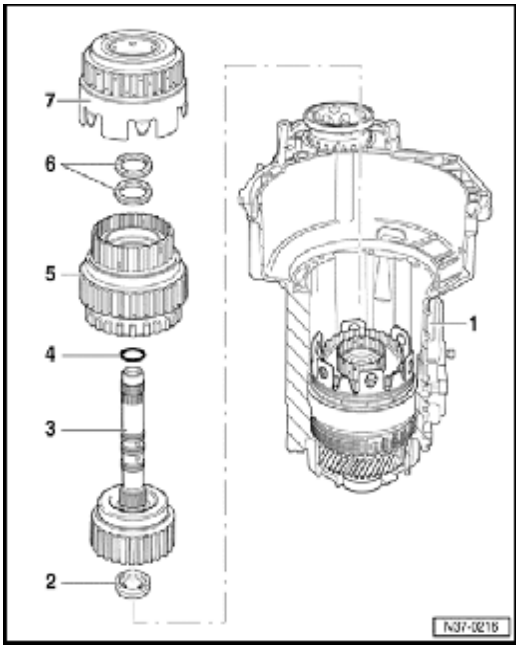

Determining shim -A-

A - Shim

1 - ATF pump

2 - Reverse gear clutch -K2-

3 - 1st to 3rd gear clutch -K1-

4 - 4th gear clutch -K3-

- Calculate thickness of shim. Determine gap "x" and calculate shim thickness.

Gap x = a - b

37-109

Calculating a :

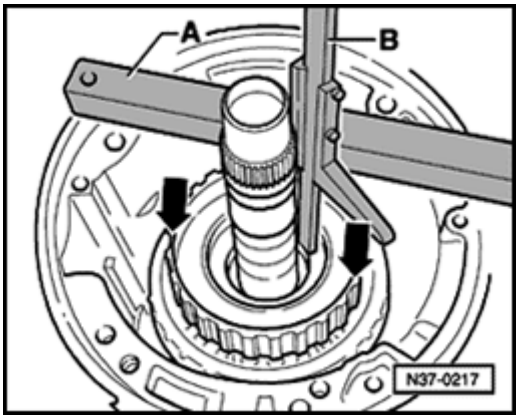

- Place straightedge "A" onto housing.
- Press -K1- down in direction of (arrow) and measure distance into -K1- with depth gauge "B".

Example:

Reading 1 = 88.5 mm

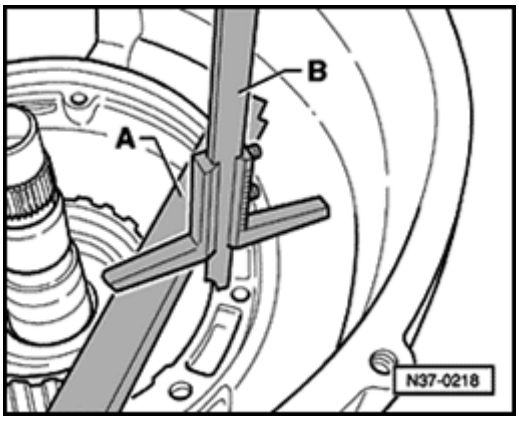

- Measure with depth gauge "B" to pump flange on housing.

Example:

Reading 2 = 34.3 mm

Reading	=	88.5 mm
- Reading 2	=	-34.3 mm
Calculated size a	=	54.2 mm

= Size measured from pump flange/housing into -K1-
.

37-110

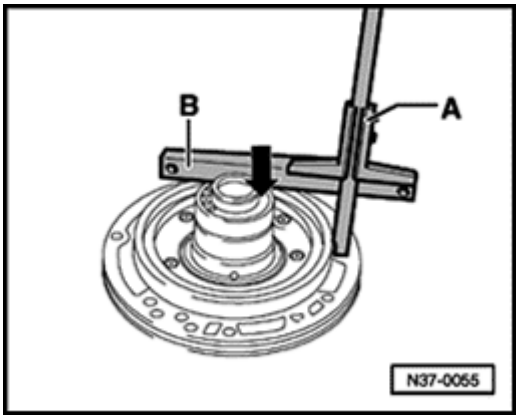

Calculating b :

- Place straightedge -B- onto stator support (arrow) and measure with depth gauge -A- to gasket of pump flange.

Example:

Reading	=	70.5 mm
- Straightedge	=	-19.5 mm
Calculated size b	=	51.0 mm

Gap x = a - b

= 54.2 mm - 51.0 mm = 3.2 mm

- Determine size of shim according to table:

Table of shims

Gap "x" (mm)	Shims (mm)
... 2.45	1.4
2.55 ... 3.09	1 + 1
3.10 ... 3.49	1.2 + 1.2
3.50 ... 3.89	1.4 + 1.4
3.90 ... 4.29	1.6 + 1.6
4.30 ... 4.69	1.8 + 1.8
4.70 ... 5.04	1.2 + 1.2 + 1.6
5.05 ... 5.25	1.2 + 1.2 + 1.8

- Determine thickness of shims according to table and determine Part No. from parts catalog.

- Perform clutch play check measurement after installing ATF pump.

37-112

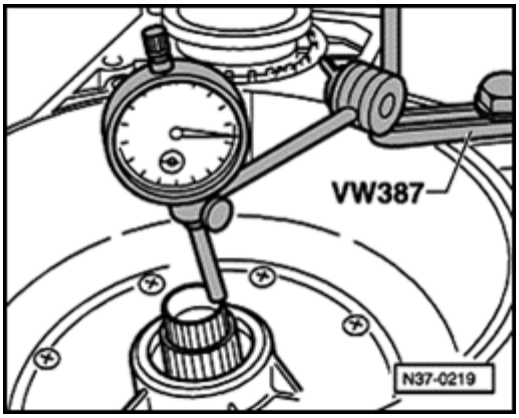

Check measurement (clutch play)

- The clutch play cannot be measured until the ATF pump has been installed.

- Attach dial gauge holder to transmission housing and place dial gauge on turbine shaft with a preload of 1 mm.

- Move turbine shaft up and down and read play on dial gauge.

Play:

min. 0.5 mm

max. 1.2 mm

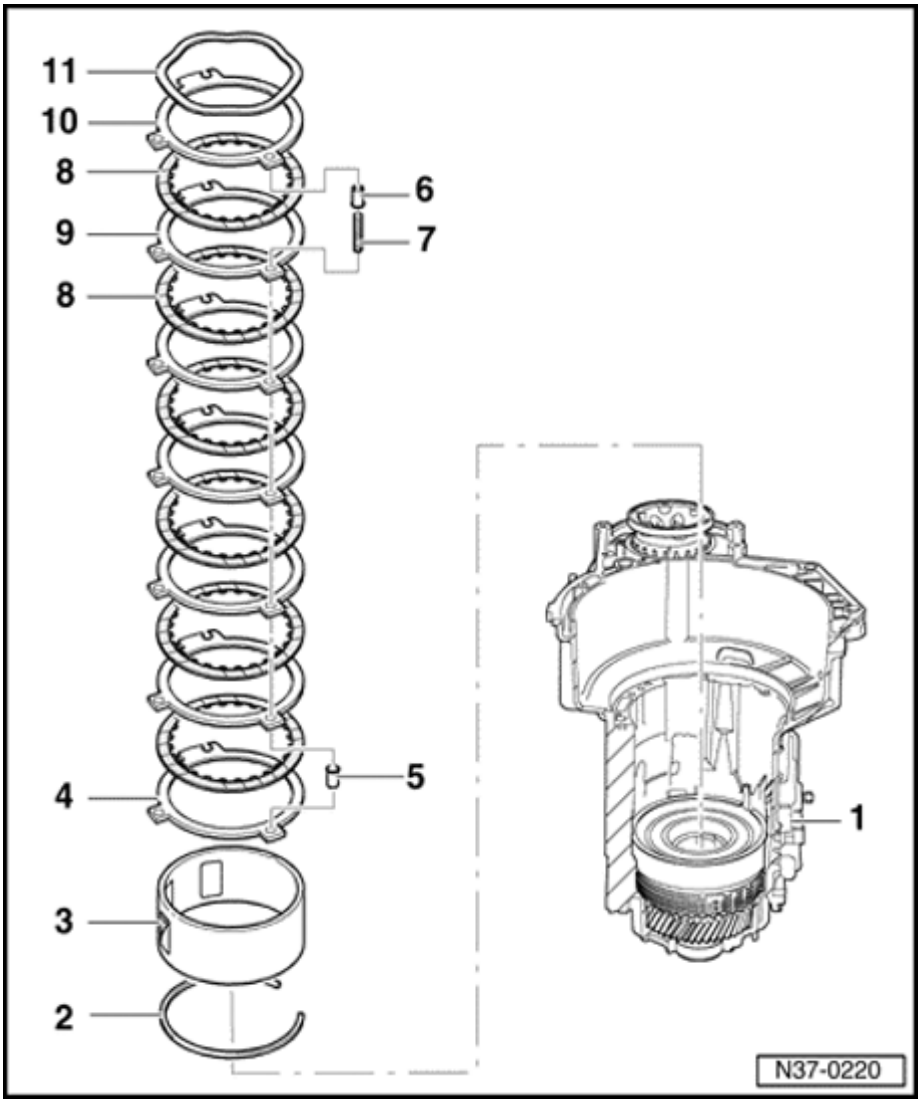

2nd and 4th gear brake -B2-, adjusting

- Install components to adjust 2nd and 4th gear brake -B2 without corrugated washer (item 11), without last outer plate (item 10) and without spring caps (item 6) Assembling planetary transmission, ⇒ Page 37-78 .

1 - Transmission housing

2 - Circlip

- For supporting tube

3 - Supporting tube -B2-

- Length of -B2- with

  5 inner plates 68.6 mm

  6 inner plates 64.9 mm

- Quantity inner plates -B2- ⇒ Page 00-6
- Insert so that notch locates on free wheel wedge

4 - Outer plate -B2-

- 3 mm thick

37-114

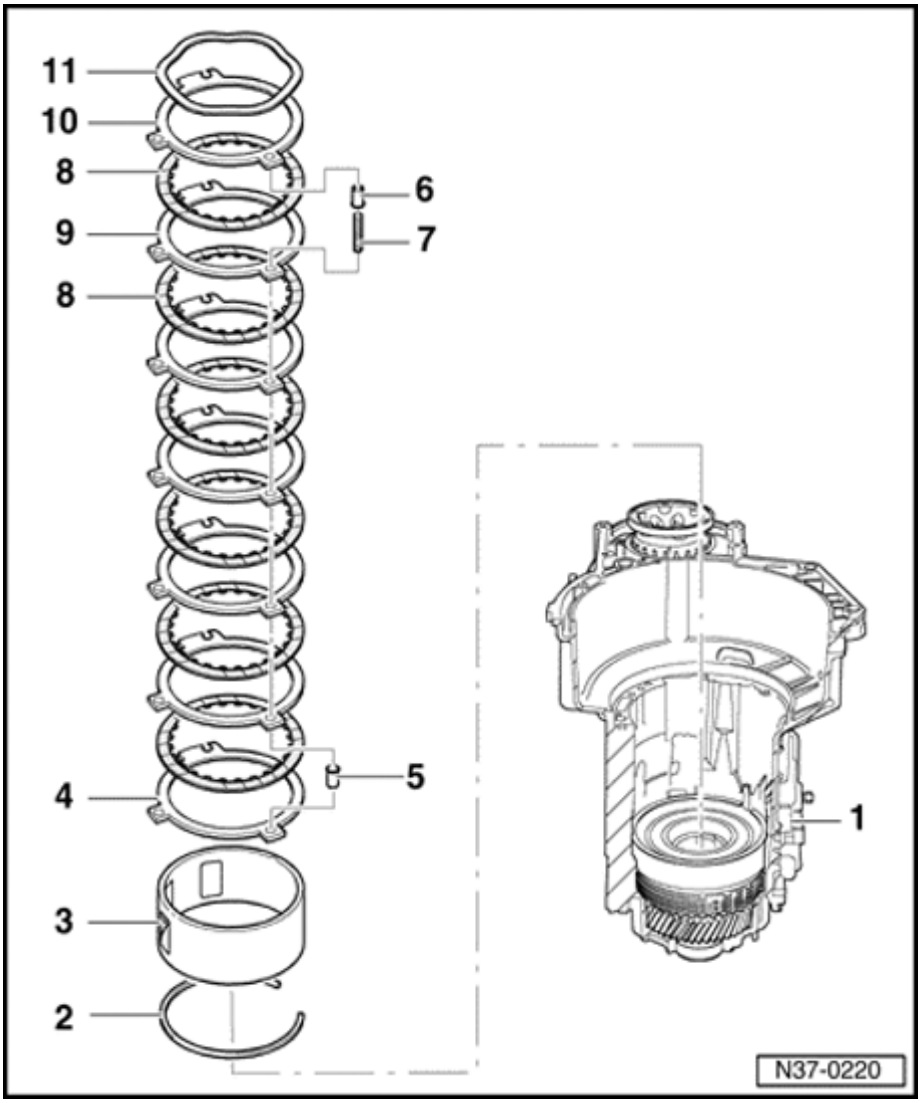

5 - Spring cap

- Install after installing first outer plate

6 - Spring cap

- Do not install when adjusting -B2-
- Install before installing last outer plate

7 - Spring

8 - Inner plate -B2-

- Quantity ⇒ Page 00-6

9 - Outer plate -B2-

- Always install 2 mm thick outer plates
- Quantity ⇒ Page 00-6

10 - Outer plate-B2-

- Do not install when adjusting -B2-
- 2 outer plates can be installed.

11 - Corrugated washer

- Do not install when adjusting -B2-

37-115

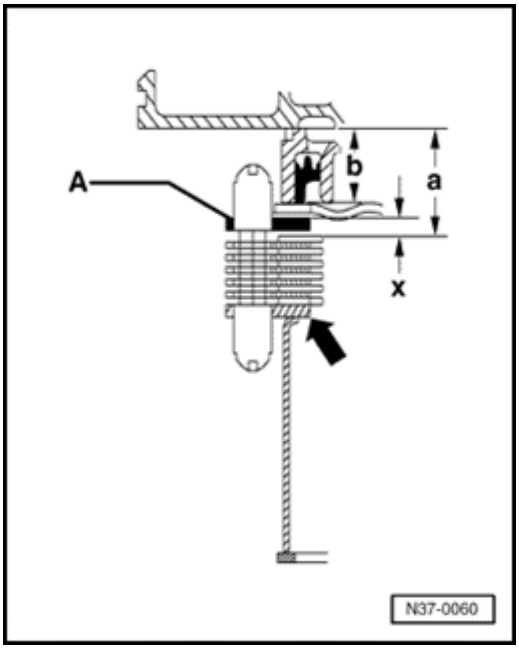

Calculating thickness of last outer plate -A-

The thickness of the outer plate is determined by gap "x" and is selected from table, ⇒ Page 37-117 .

Gap x = a - b - 3.2 mm

A - Outer plate

Note:

First outer plate (arrow) is always 3 mm thick.

37-116

Calculating a :

(Clutches installed, assembling planetary transmission, ⇒ Page 37-78)

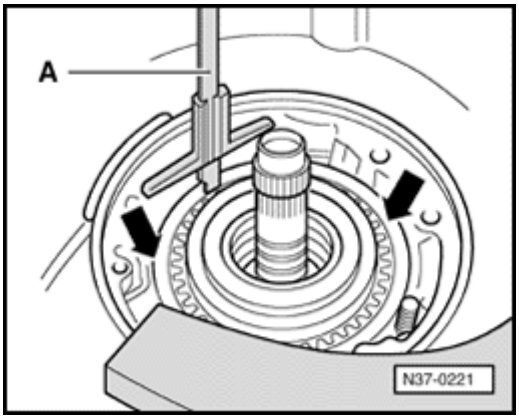

- Measure from pump flange/housing to last inner plate with depth gauge "A".

Example:

Reading for a	=	30.2 mm

Calculating b :

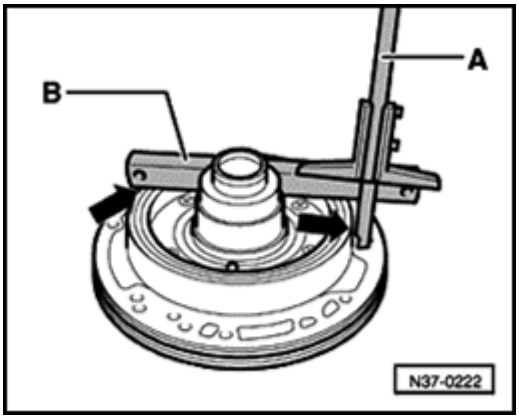

- Place straightedge "B" onto stator support (arrow) and measure with depth gauge "A" to gasket of pump flange.

Example:

Reading	=	40.1 mm
- Straightedge	=	-19.5 mm
Calculated size b	=	20.6 mm

Gap x = a - b - 3.6 mm

= 30.2 - 20.6 - 3.2 = 6.4 mm

- Determine thickness of outer plate according to table:

Table of plates

Gap "x" (mm)	Plate (mm)
4.25 ... 4.49	
4.50 ... 4.74	
4.75 ... 4.99	
5.00 ... 5.24	
5.25 ... 5.49	
5.50 ... 5.74	
5.75 ... 5.99	
6.00 ... 6.24	
6.25 ... 6.49	
6.50 ... 6.74	
6.75 ... 7.00	

- Determine thickness of outer plate according to table and determine Part No. from parts catalog.

  - Two outer plates can be installed.

37-118

Starter bushing removing and installing

Tools and other materials required

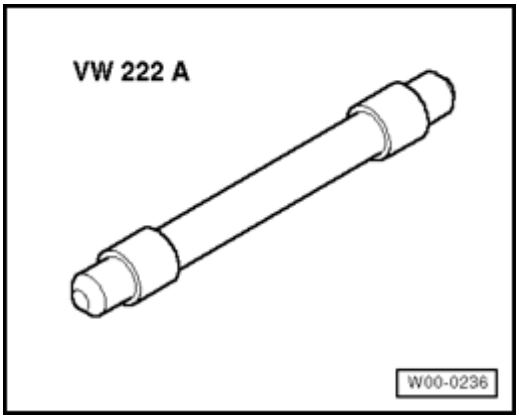

- VW 222 A mandrel

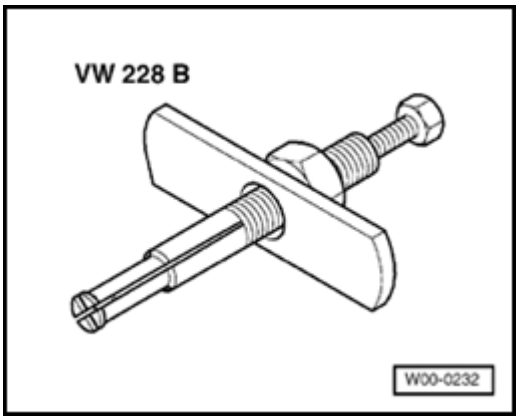

- VW 228 B extractor

37-119

Removing

- In the case of vehicles with coded radios, make a note of the code or ask what it is
- Disconnect battery Ground (GND) strap
- Remove starter.

⇒ *Repair Manual, Electrical Equipment, Repair Group 27 Removing and installing the starter*

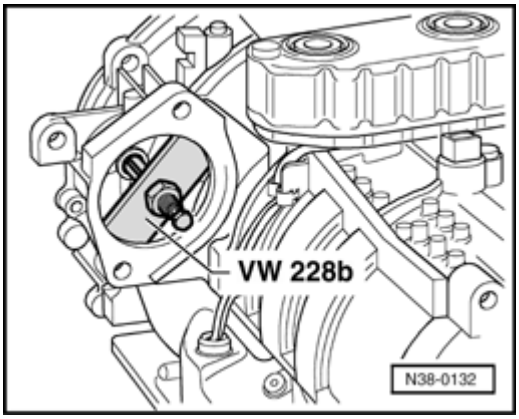

➤ Remove starter bush.

Installing

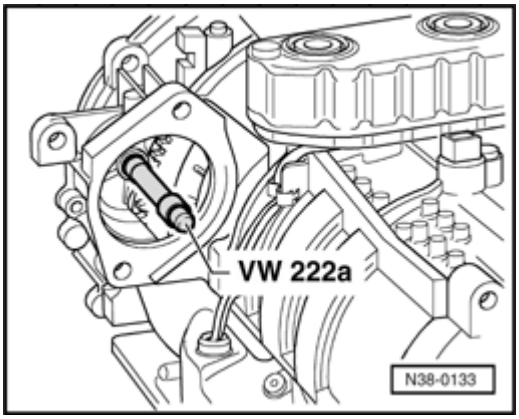

➤ Drive in starter bushing.

- Oil bearing bush before driving in
- Install starter

⇒ *Repair Manual, Electrical Equipment, Repair Group 27 Removing and installing the starter*

- Connect battery Ground (GND) strap.

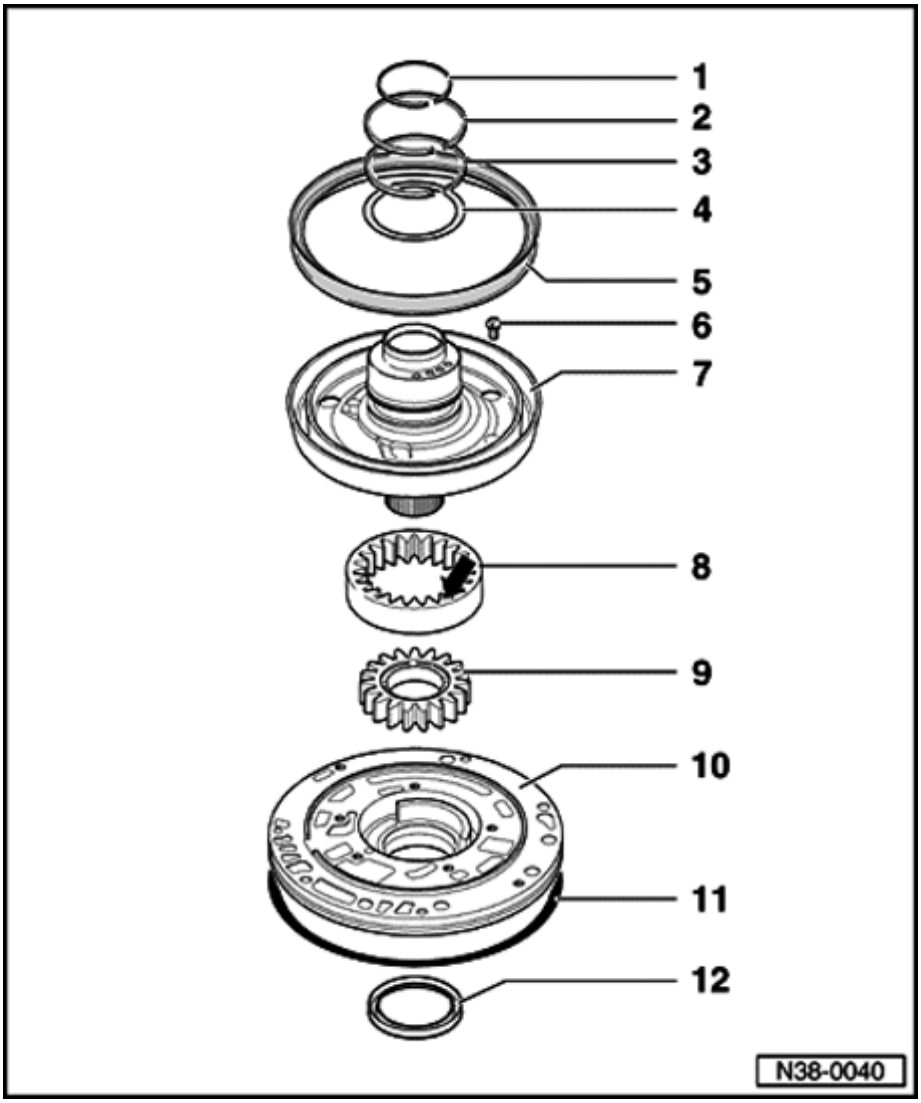

ATF pump, disassembling and assembling

1 - Piston ring

- Check that it is correctly located
- Installing ⇒ Fig. 2

2 - Piston ring

- Check that it is correctly located
- Installing ⇒ Fig. 2

3 - Piston ring

- Check that it is correctly located
- Installing ⇒ Fig. 2

4 - Thrust washer

5 - Piston

- Sealing lips are vulcanized to the piston
- Moisten sealing lips with ATF before installing
- Turn piston slightly when installing

38-2

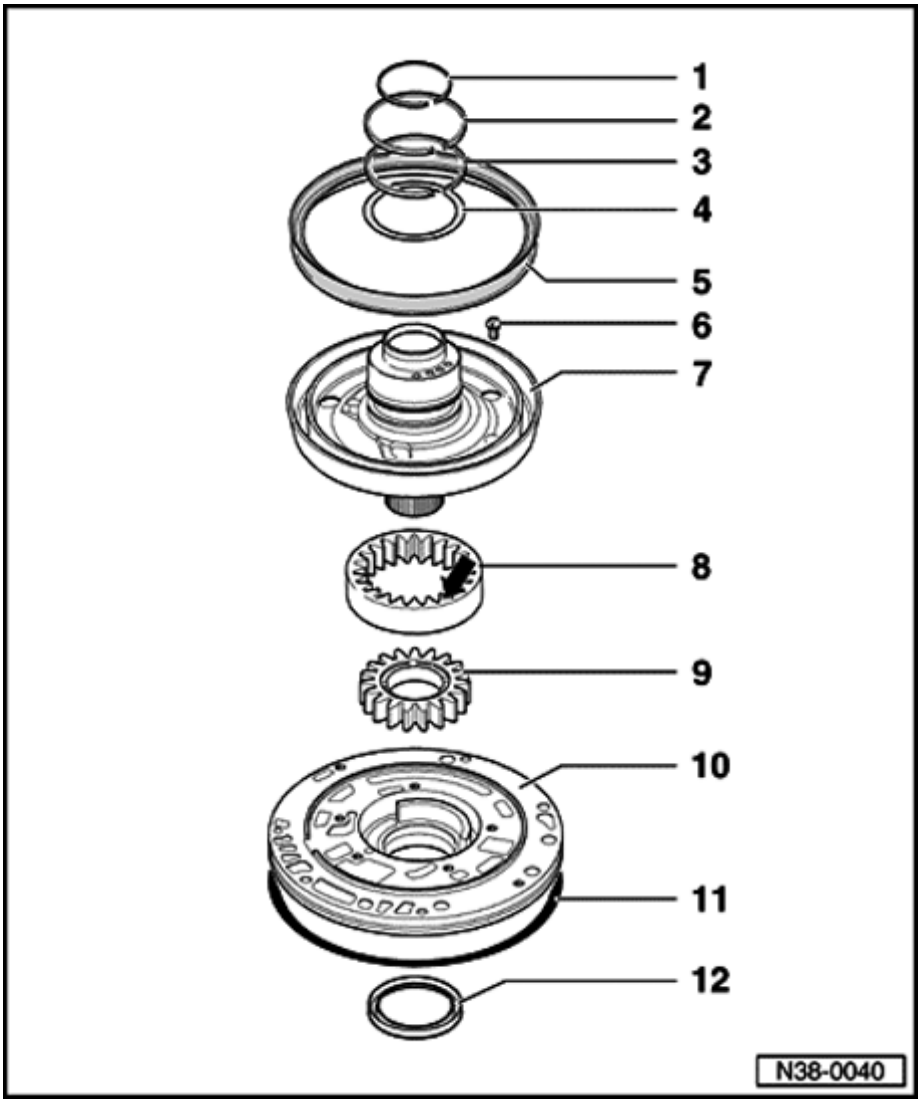

6 - Bolt

- Tightening torque: 10 Nm (7 ft lb) plus an additional $^{1}/_{8}$ turn (45°)

7 - Stator support

8 - Outer gear

- Manufacturer s marking (arrow) faces stator support
- If outer gear is incorrectly installed, the ATF pump may not operate freely in the installed position

9 - Inner gear

- Larger groove faces stator support

10 - Housing for ATF pump

11 - O-ring

- Always replace

12 - Torque converter oil seal

- Removing and installing ⇒ Page 32-3

38-3

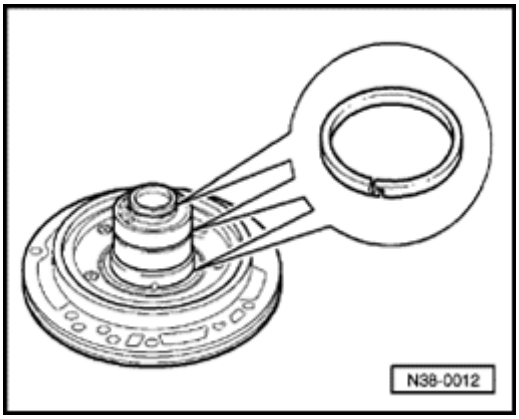

Fig. 1 Piston rings, checking correct location

- Ensure that ends of piston rings are hooked together.

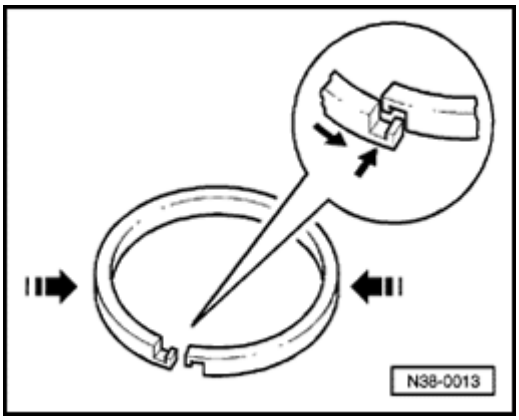

Fig. 2 Piston rings, installing and hooking ends together

- Place piston ring in groove.
- Press sides of ring in and guide ends over one another.

Note:

Do not twist piston ring out of groove on one side.

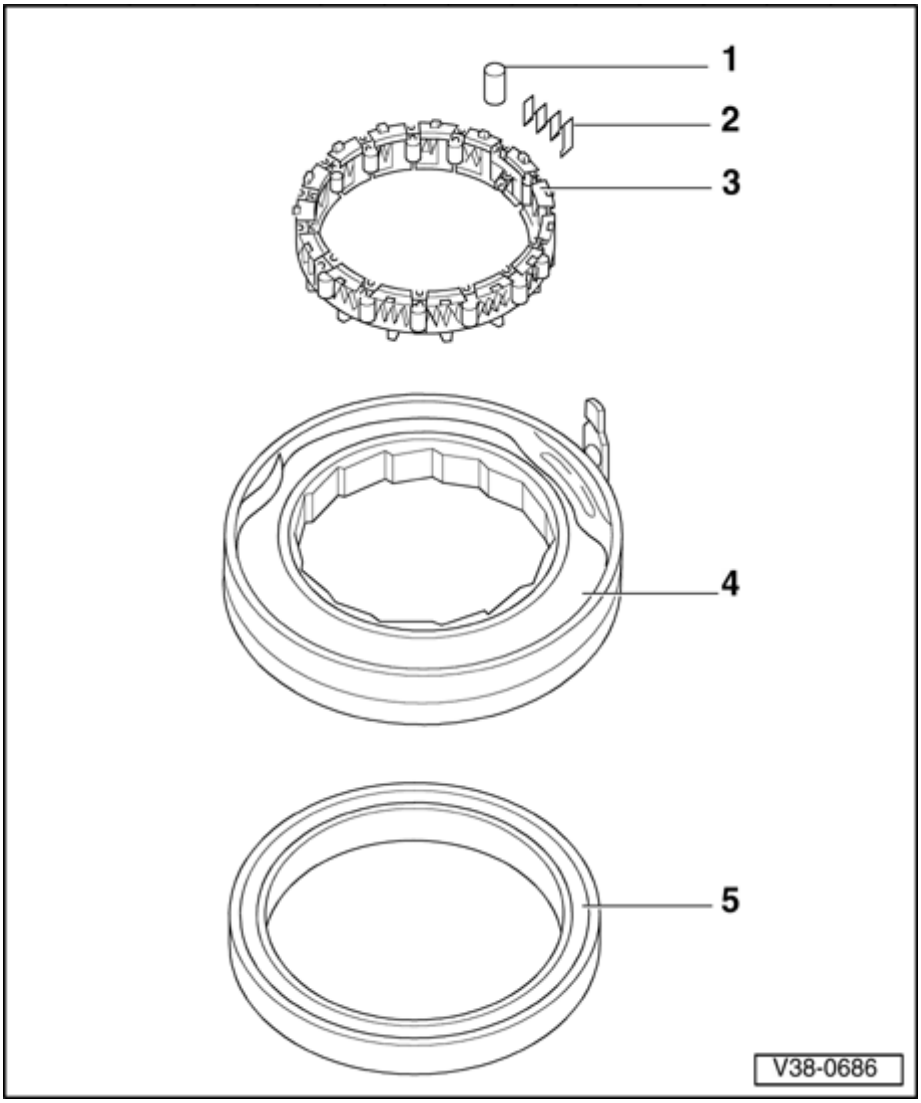

Free wheel with -B1- piston, disassembling and assembling

1 - Rollers

- Installing ⇒ Fig. 1

2 - Springs

- Installing ⇒ Fig. 1

3 - Cage

- Installing ⇒ Fig. 2
- Securing ⇒ Fig. 3

4 - Outer ring

5 - Piston

- Sealing lips are vulcanized to the piston
- Moisten sealing lips with ATF before installing
- Turn piston slightly when installing
- Installed position ⇒ Fig. 4

38-5

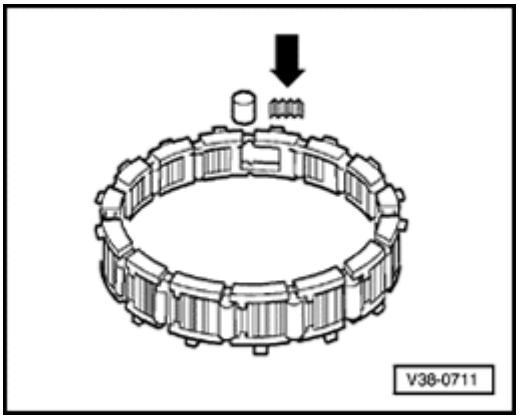

Fig. 1 Rollers and springs, installing

- Insert springs so that spring (arrow) engages in cage.

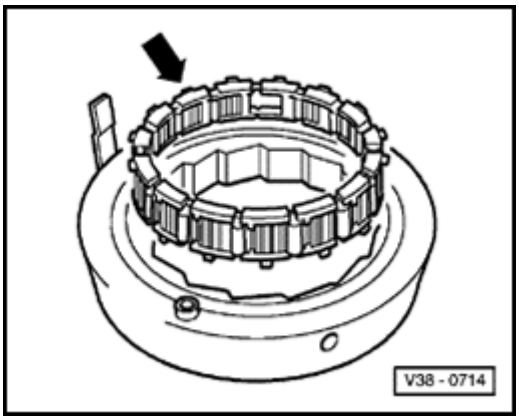

Fig. 2 Cage with springs and rollers, installing

- Install with large lugs (arrow) facing up.

38-6

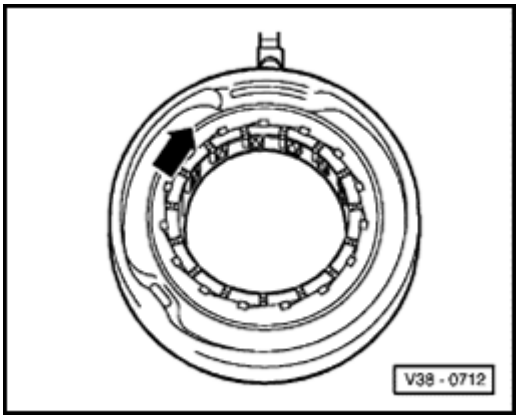

Fig. 3 Cage, securing

- Secure cage by turning in direction of (arrow) up to stop.

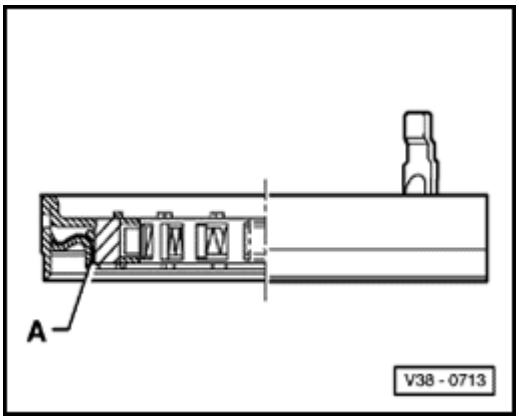

Fig. 4 Installed position of piston

- Install piston -A- as shown.

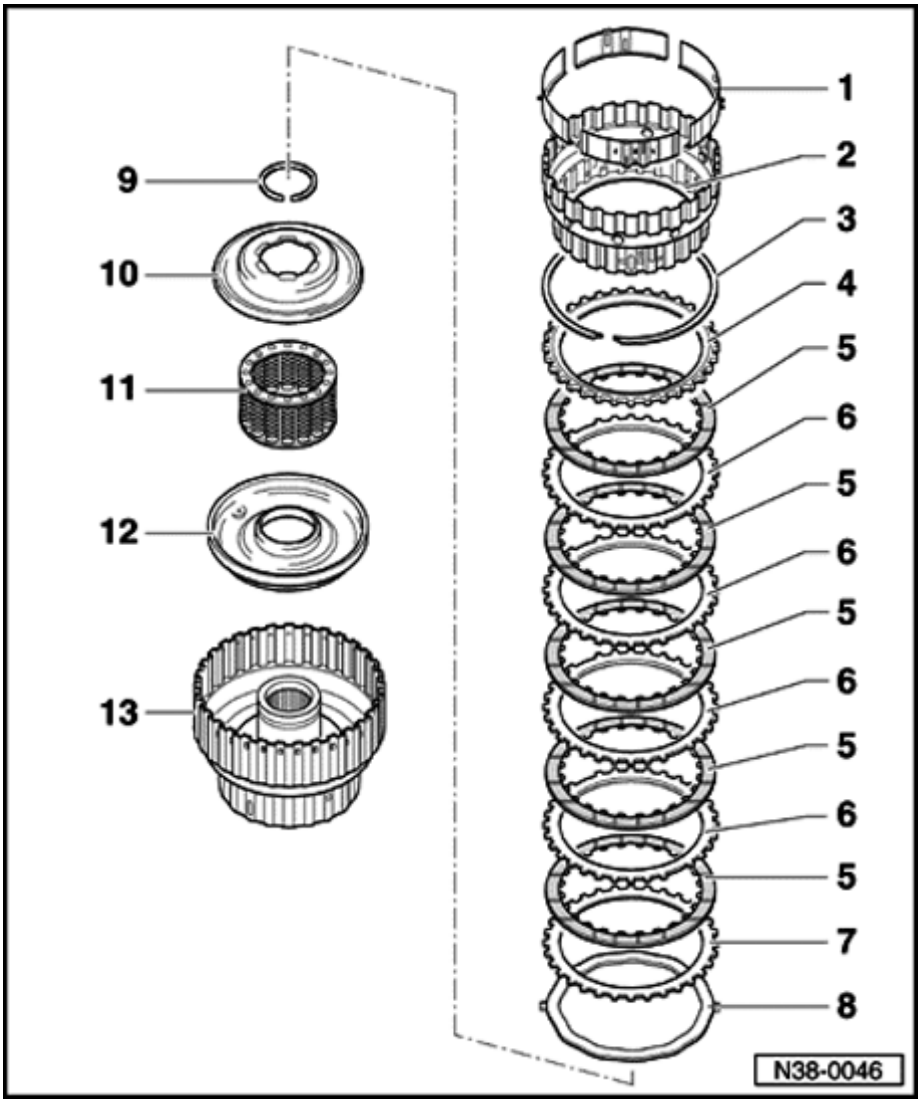

1st to 3rd gear clutch -K1-, disassembling and assembling

1 - Supporting ring

- 4-piece, unclip from inner plate carrier
- Installing ⇒ Fig. 2

2 - Inner plate carrier

- Inserting ⇒ Fig. 4
- Assembling ⇒ Fig. 2

3 - Circlip

- Different thicknesses
- Mark after removing and install in same position

4 - Thrust plate

- Smooth side faces inner plate
- Install together with inner plate carrier ⇒ Fig. 2

5 - Inner plate

- Quantity ⇒ Page 00-6
- Installing ⇒ Fig. 2

38-8

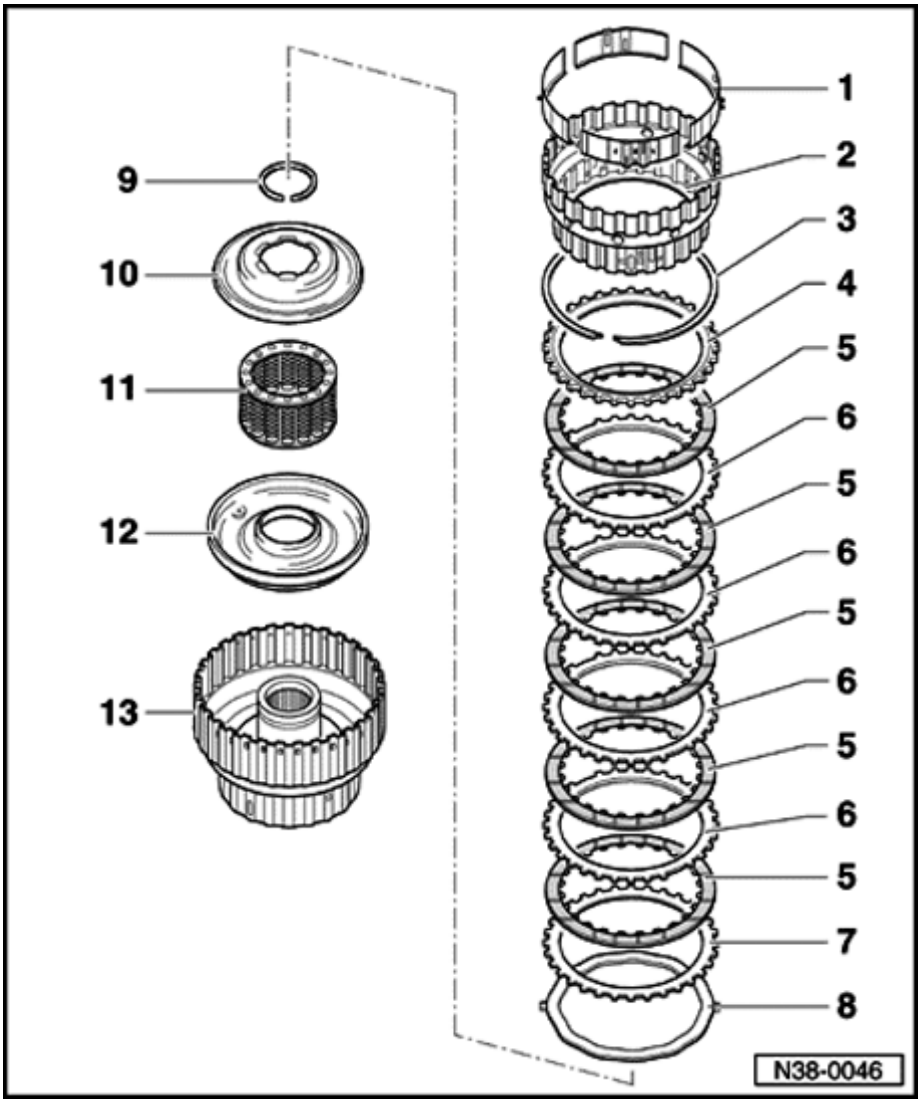

6 - Outer plate

- Quantity ⇒ Page 00-6
- Installing ⇒ Fig. 2
- Always 1.5 mm thick

7 - Outer plate

- Always 2 mm thick
- Installing ⇒ Fig. 2

8 - Corrugated washer

9 - Circlip

- Removing and installing ⇒ Fig. 1

10 - Piston cap

- Sealing lips are vulcanized to cap
- Moisten sealing lips with ATF before installing
- Turn cap slightly when installing

38-9

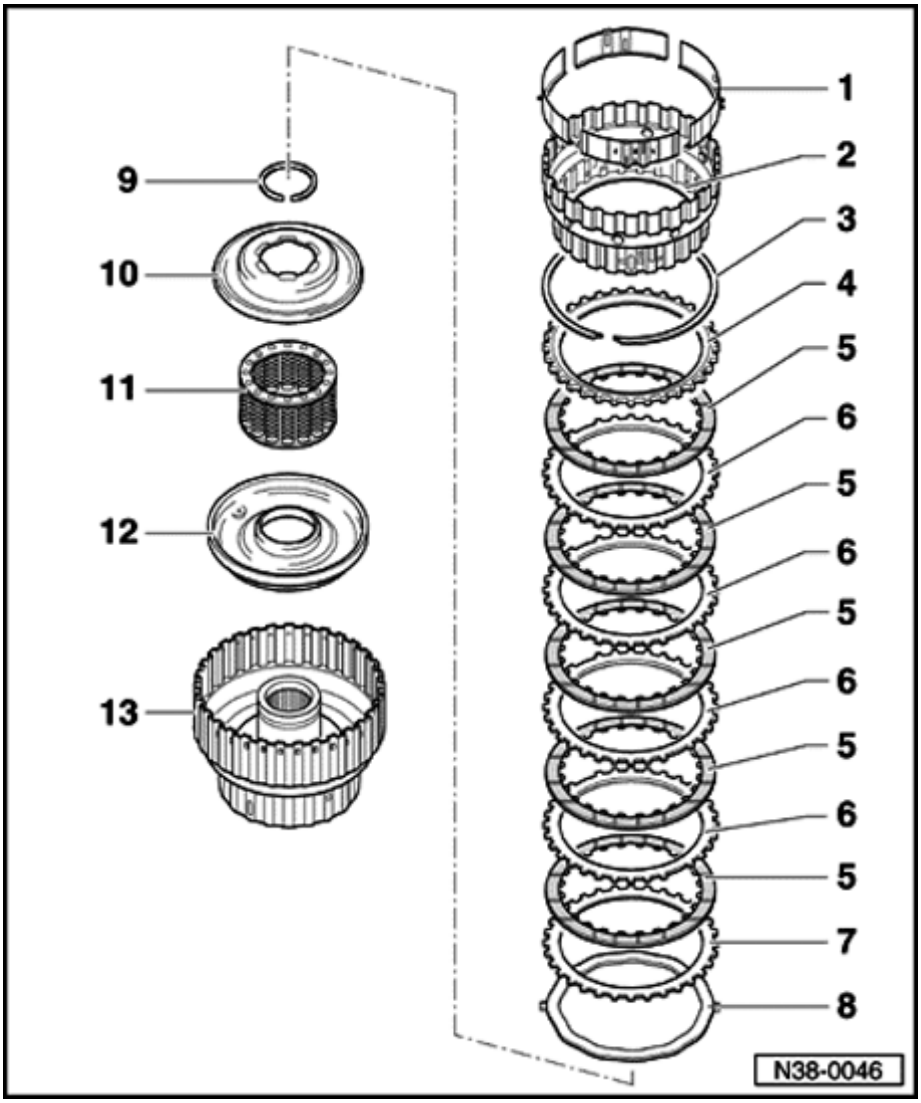

11 - Intermediate spring ring

- With spring supporting shell and compression springs

12 - Piston

- Sealing lips are vulcanized to piston
- Moisten sealing lips with ATF before installing
- Turn piston slightly when installing

13 - Clutch housing

- Before installing the inner plate carrier corrugated washer (item 8), install inner and outer plates in the clutch ⇒ Fig. 3

38-10

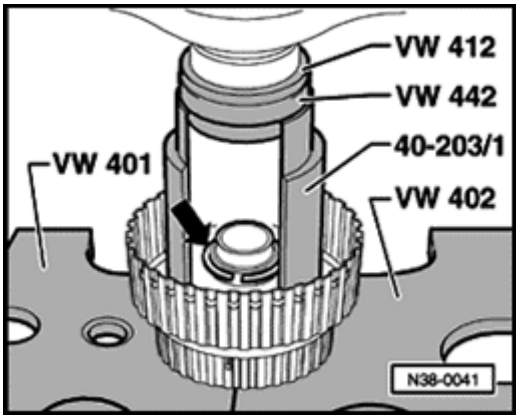

Fig. 1 Circlip, removing and installing

- Press piston cap with intermediate spring ring down far enough for circlip (arrow) to be inserted in groove.

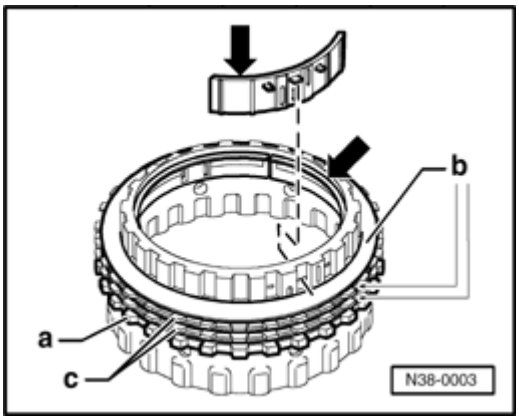

Fig. 2 Thrust plate and plates, installing on inner plate carrier

- Install thrust plate -a- with smooth side facing inner plate and stepped side toward inner plate carrier.
- Install 3 inner plates -b- and 2 outer plates -c-.
- Clip in supporting ring with step (arrow).

Notes:

Position locating lugs correctly.

Installing corrugated washer and further plates in clutch housing ⇒ Fig. 3 .

38-11

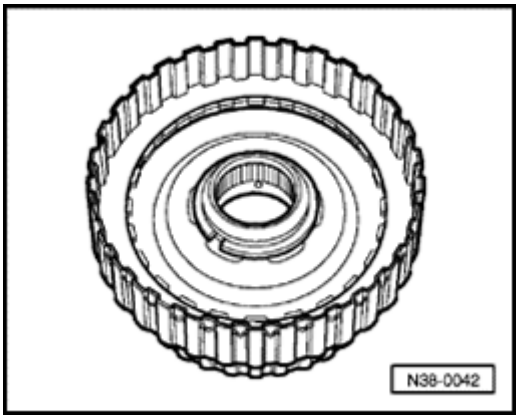

Fig. 3 Corrugated washer and inner and outer plates, installing in clutch housing

- Install corrugated washer.
- Install 2 mm thick outer plate.
- Install remaining inner and outer plates.

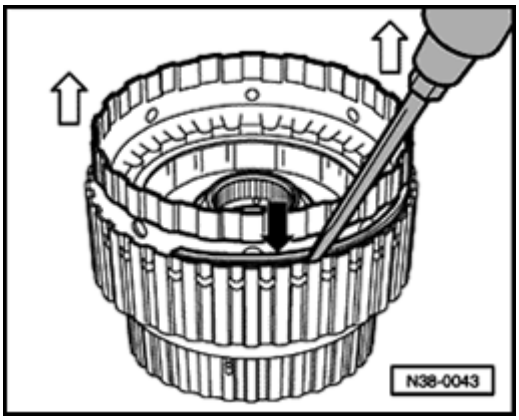

Fig. 4 Inner plate carrier and circlip (arrow), installing

- Lift inner plate carrier slightly to install circlip.

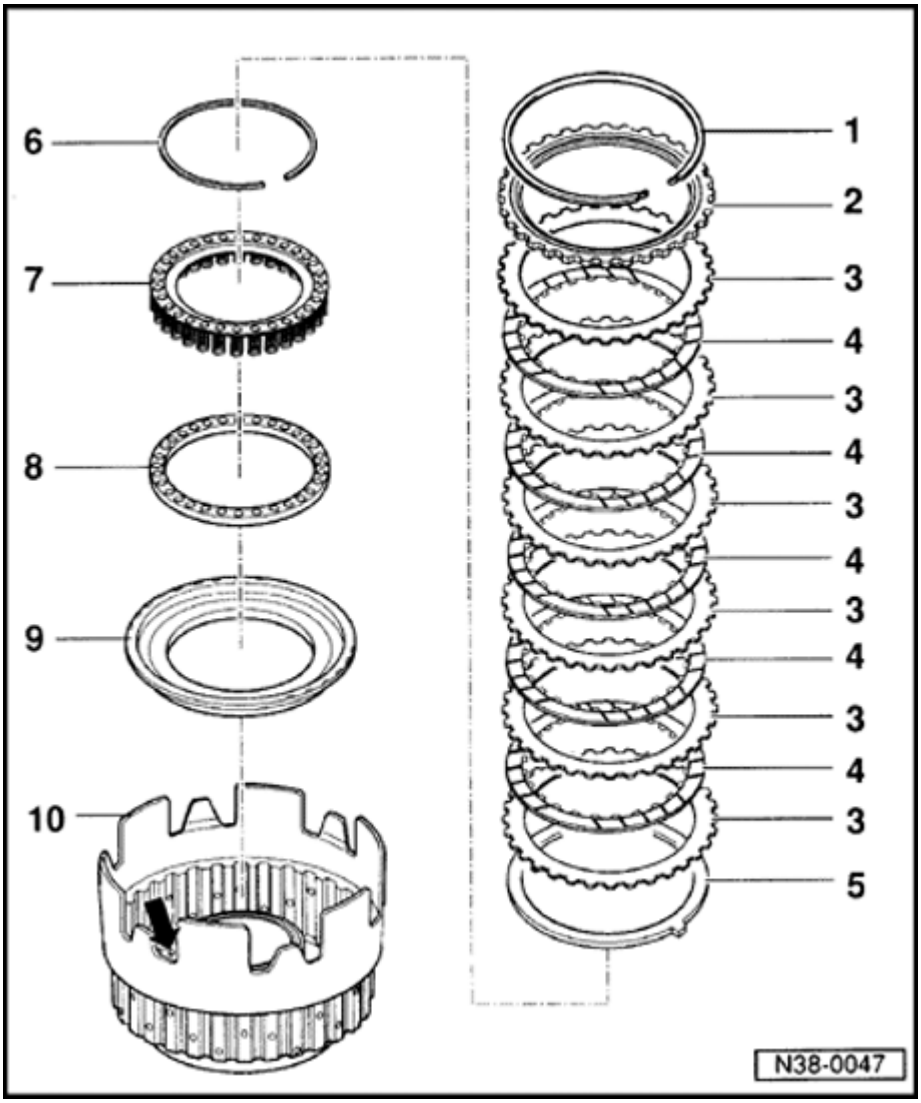

Reverse gear clutch -K2-, disassembling and assembling

Note:

When performing repairs to the clutch, ensure that the ball valve (arrow) is not damaged.

1 - Circlip

- Mark after removing and install in same position

2 - Thrust plate

- Smooth side facing inner plates
- Thickness with clutches of

4 inner plates 6.5 mm

5 inner plates 4.9 mm

3 - Outer plate

- Quantity ⇒ Page 00-6

38-13

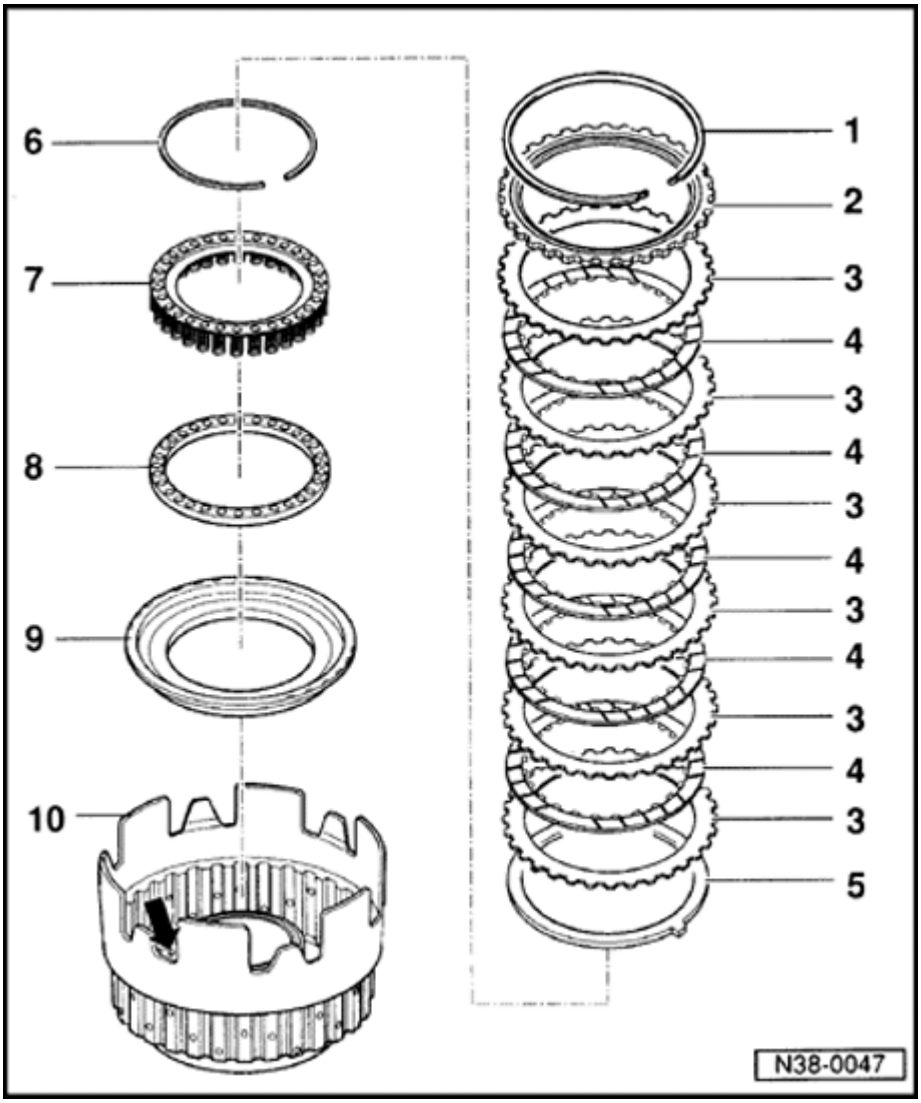

4 - Inner plate

- Quantity ⇒ Page 00-6

5 - Corrugated washer

6 - Circlip

- Removing and installing ⇒ Fig. 1
- Installation position ⇒ Fig. 2

7 - Spring supporting plate

- With springs
- Installation position ⇒ Fig. 2

8 - Spring supporting ring

9 - Piston

- Sealing lips are vulcanized to piston
- Moisten sealing lips with ATF before installing
- Turn piston slightly when installing

10 - Clutch housing

38-14

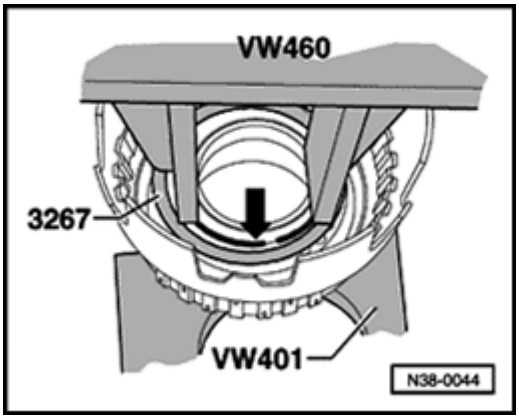

Fig. 1 Circlip (arrow), removing and installing

- Press spring supporting plate down with 3267 enough so that circlip can be removed and installed.

Note:

Do not damage clutch housing ball valve.

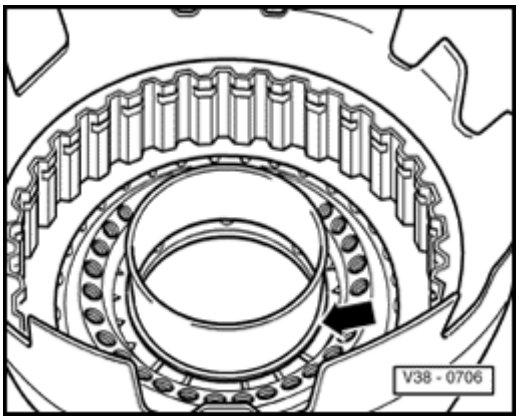

Fig. 2 Spring supporting plate/circlip, installation position

Circlip (arrow) must be seated in the groove of clutch housing. Spring supporting plate must be centered relative to hub.

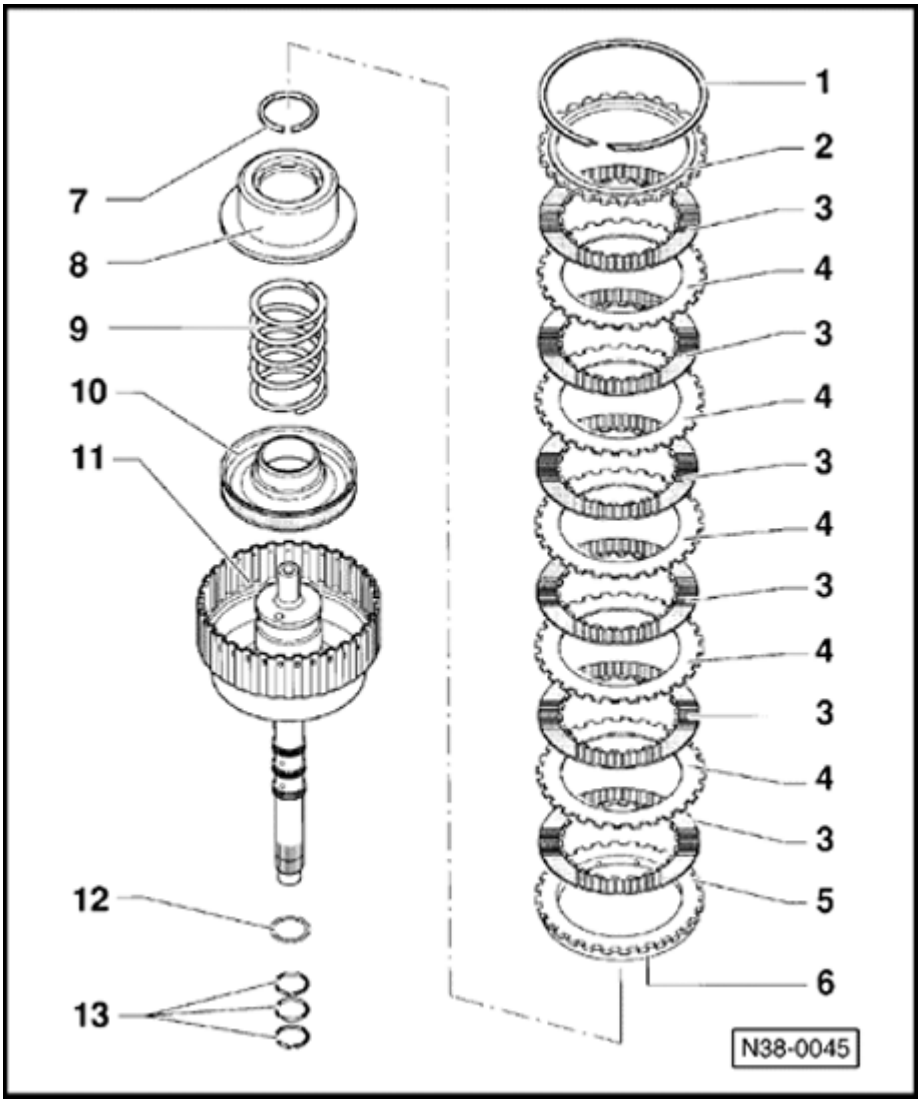

4th gear clutch -K3- with turbine shaft, disassembling and assembling

1 - Circlip

- Different thickness
- Mark after removing and install at same point

2 - Thrust plate

- Install with stepped side facing circlip

3 - Inner plate

- Quantity ⇒ Page 00-6

4 - Outer plate

- Quantity ⇒ Page 00-6

5 - Pressure plate

- Install with peened corrugated washer facing piston

6 - Corrugated washer

- Peened to pressure plate (item 5)

38-16

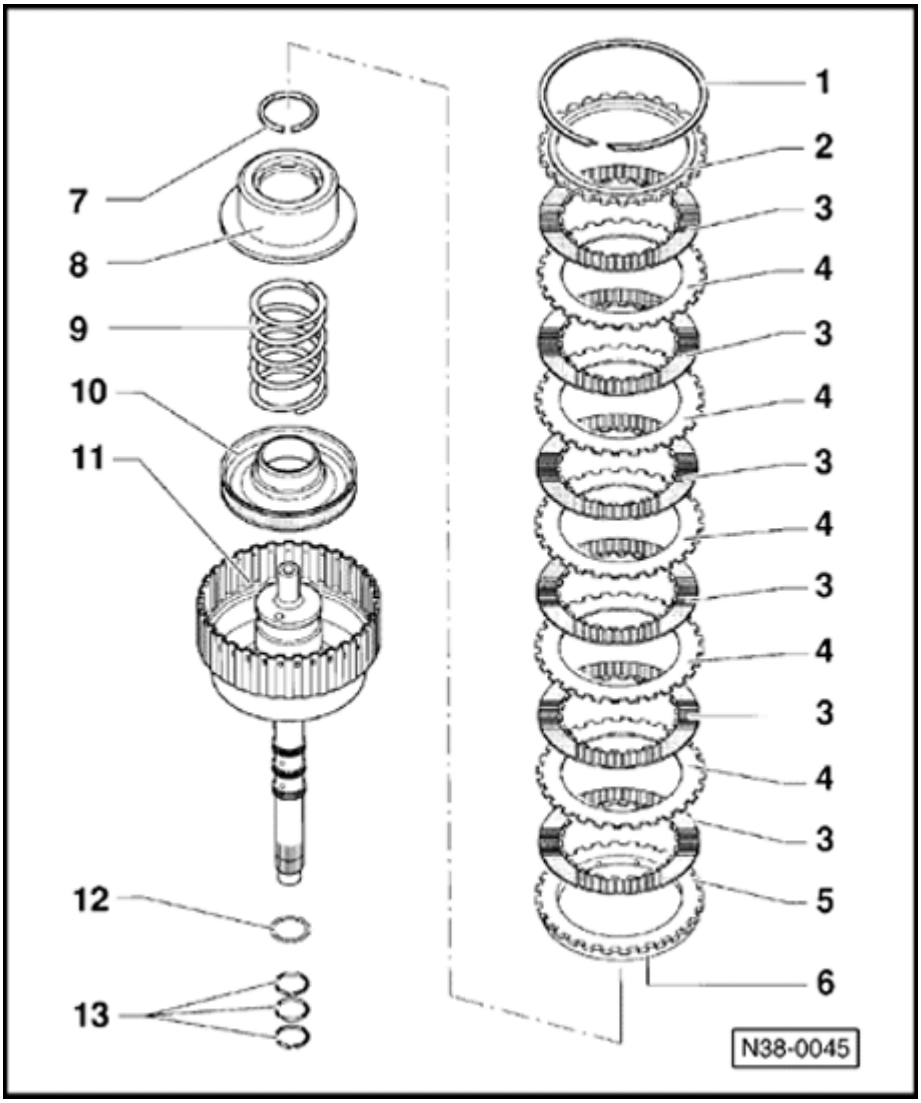

7 - Securing ring

- Removing and installing ⇒ Fig. 1

8 - Piston cap

- Sealing lips are vulcanized to piston cap
- Moisten with ATF before installing
- Turn piston cap slightly when installing
- When removing and installing press down and install securing ring (item 7)

9 - Spring

- Seat between piston and piston cap

10 - Piston

- Sealing lips are vulcanized to piston
- Moisten with ATF before installing
- Turn piston slightly when installing

38-17

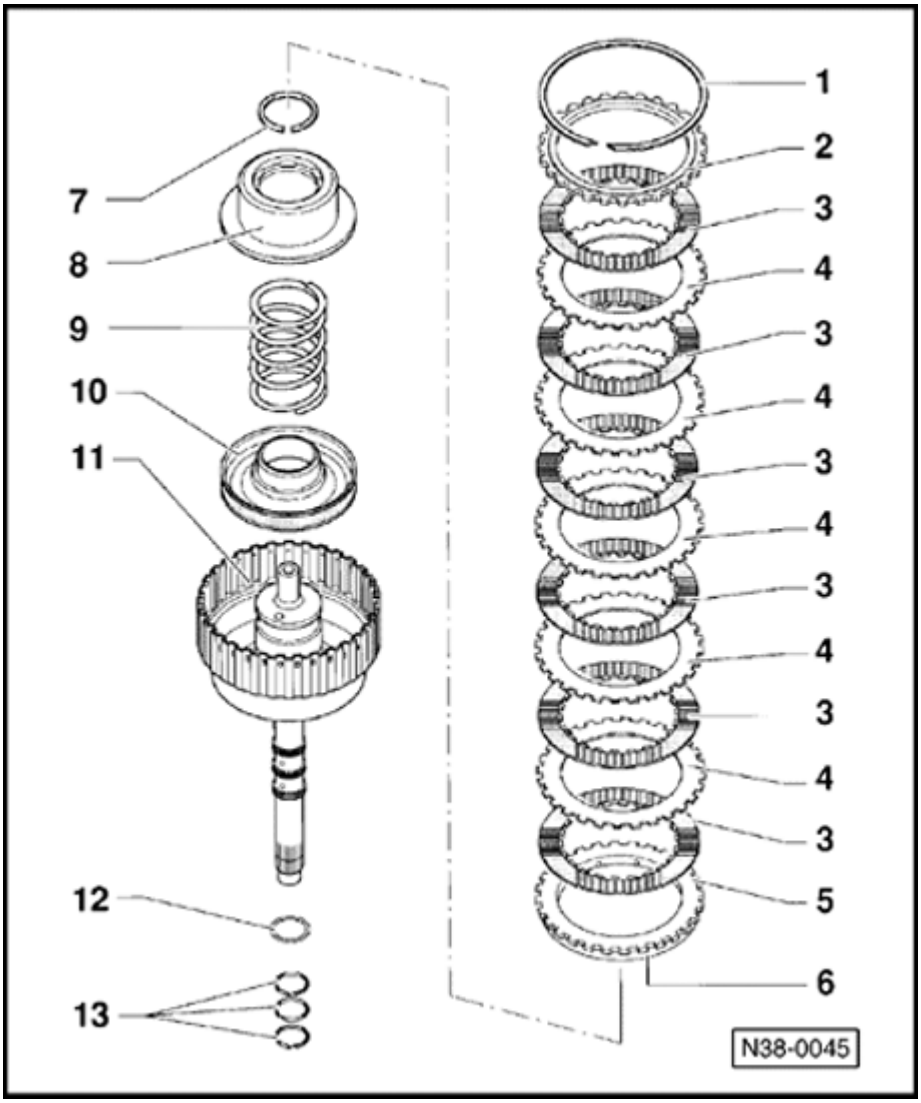

11 - Clutch housing with turbine shaft

- Height varies according to number of inner and outer plates

12 - O-ring

- Always replace
- Installing ⇒ Fig. 4

13 - Piston ring

- Check for correct location ⇒ Fig. 2
- Installing ⇒ Fig. 3

38-18

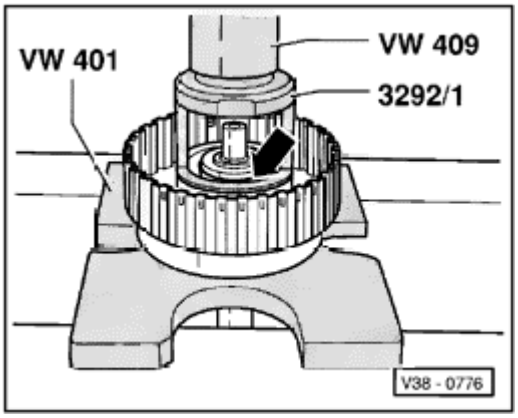

Fig. 1 Circlip (arrow), removing and installing

- Press down carefully on piston cap until circlip can be installed.

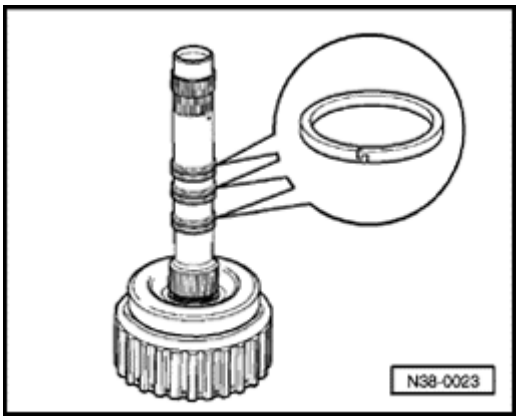

Fig. 2 Seating of piston rings, checking

A piston ring is installed on the pump shaft inside the clutch housing (arrow).

- Ensure that ends of piston rings are hooked together.

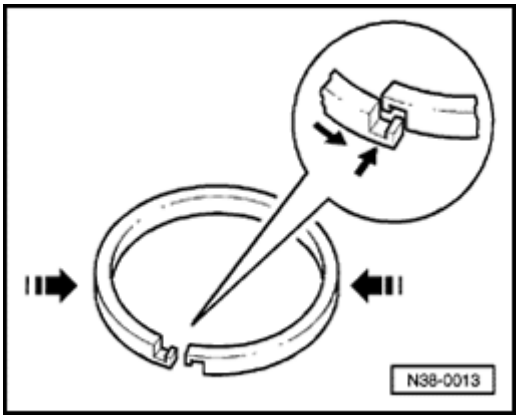

Fig. 3 Piston rings, installing and hooking ends together

- Place piston ring in groove.
- Press sides of ring in and guide ends over one another.

Note:

Do not twist piston ring out of groove on one side.

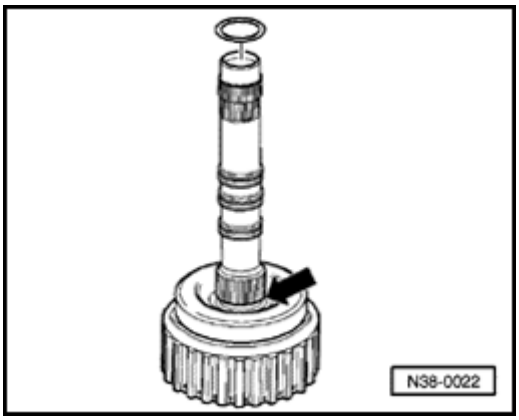

Fig. 4 O-ring, installing

- Insert O-ring in recess in turbine shaft (arrow).

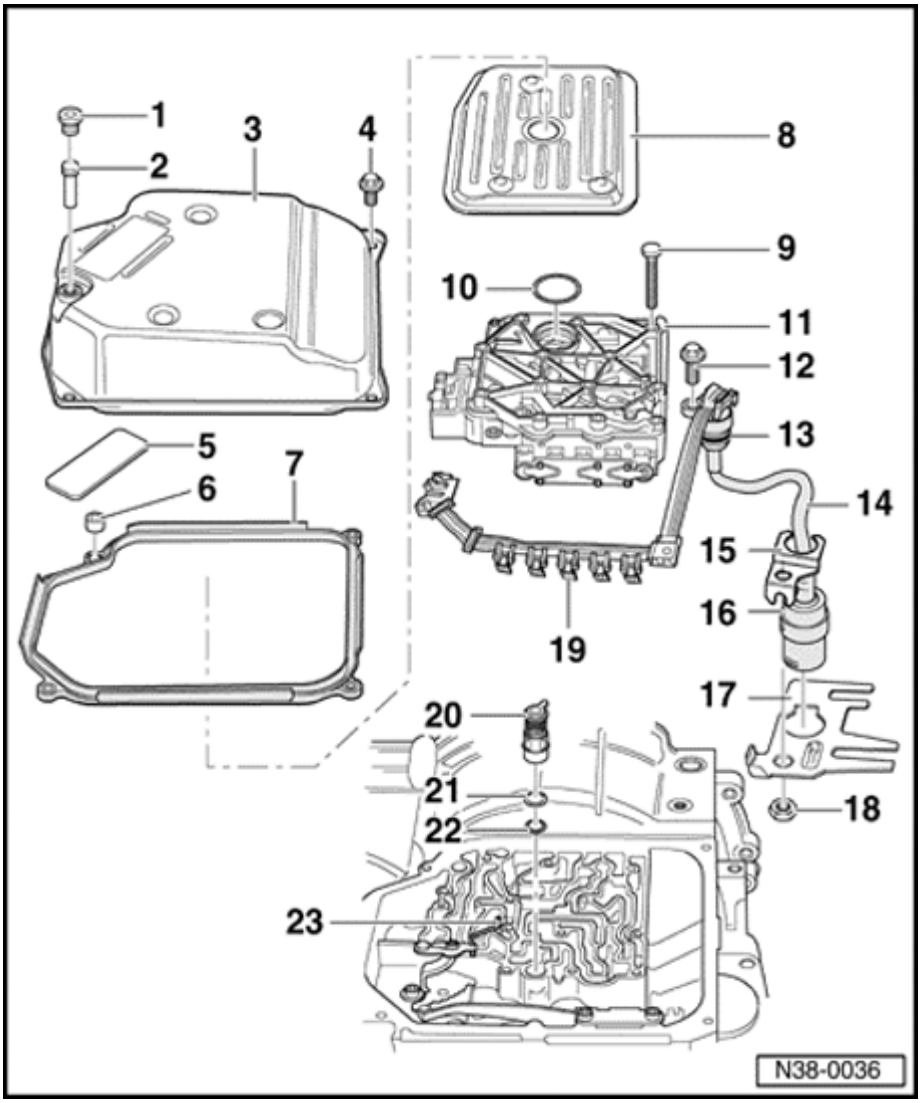

Valve body, removing and installing

CAUTION!

Do not run the engine or tow the vehicle with the oil pan removed or when there is no ATF in the transmission.

Note:

- *The valve body or the conductor strip can also be removed when the transmission is installed.*
- *The conductor strip can be removed individually. Remove the starter motor on vehicles with 6-cyl. engine to remove the conductor strip.*
- *After re-installing the oil pan, fill with ATF ⇒ Page 37-46 .*
- *Always replace a valve body which is fouled or faulty.*

1 - Plug

- Always replace seal ⇒ Fig. 2
- Checking ATF level and topping-up ⇒ Page 37-46

38-21

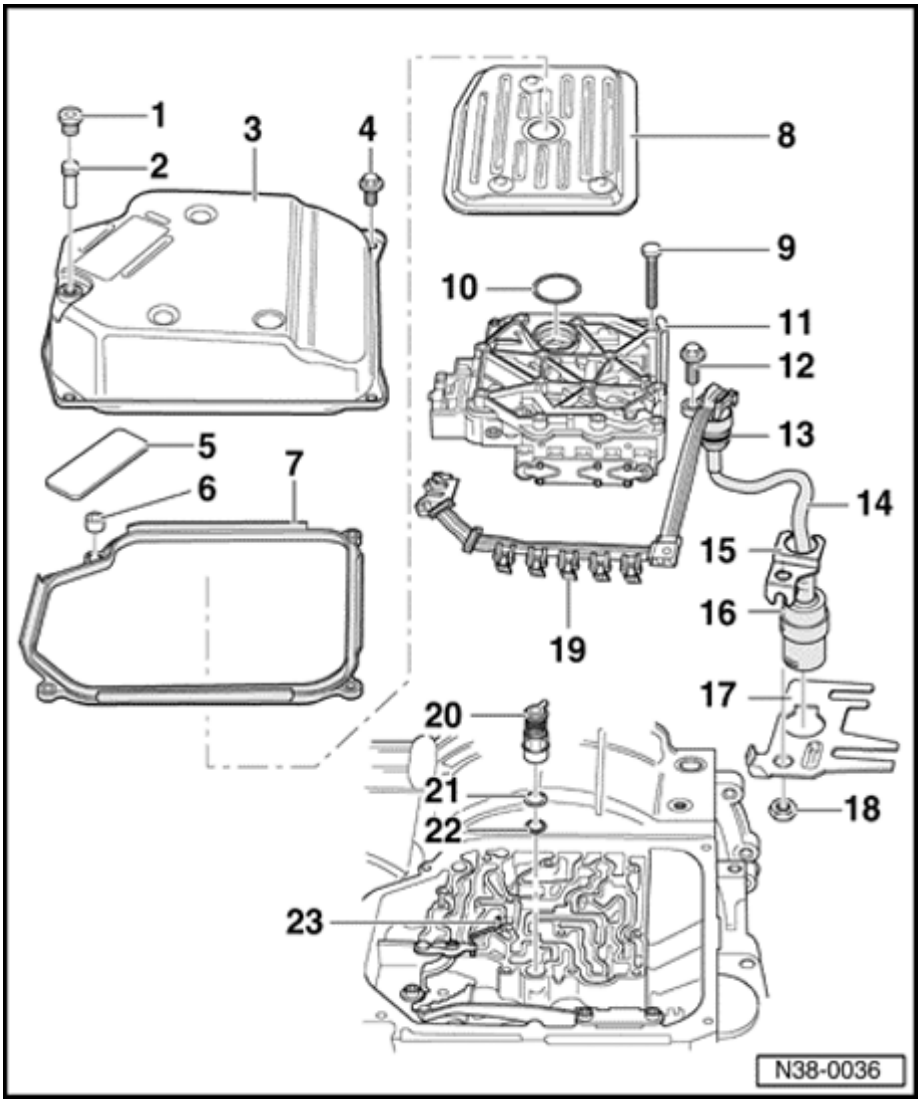

2 - Overflow tube

- Remove to drain ATF ⇒ Fig. 1
- Thread in to stop
- Checking ATF level and topping-up ⇒ Page 37-46

3 - Oil pan

4 - Bolt, 12 Nm (9 ft lb)

5 - Magnet

- Install in recess in oil pan

6 - Spacer bushing

- Press into gasket

7 - Gasket

- Always replace
- Press spacer bushings into gasket

8 - ATF screen

- Installing ⇒ Fig. 10

9 - Bolt, 5 Nm (44 in. lb)

10 - Gasket

- Always replace
- Install in valve body

38-22

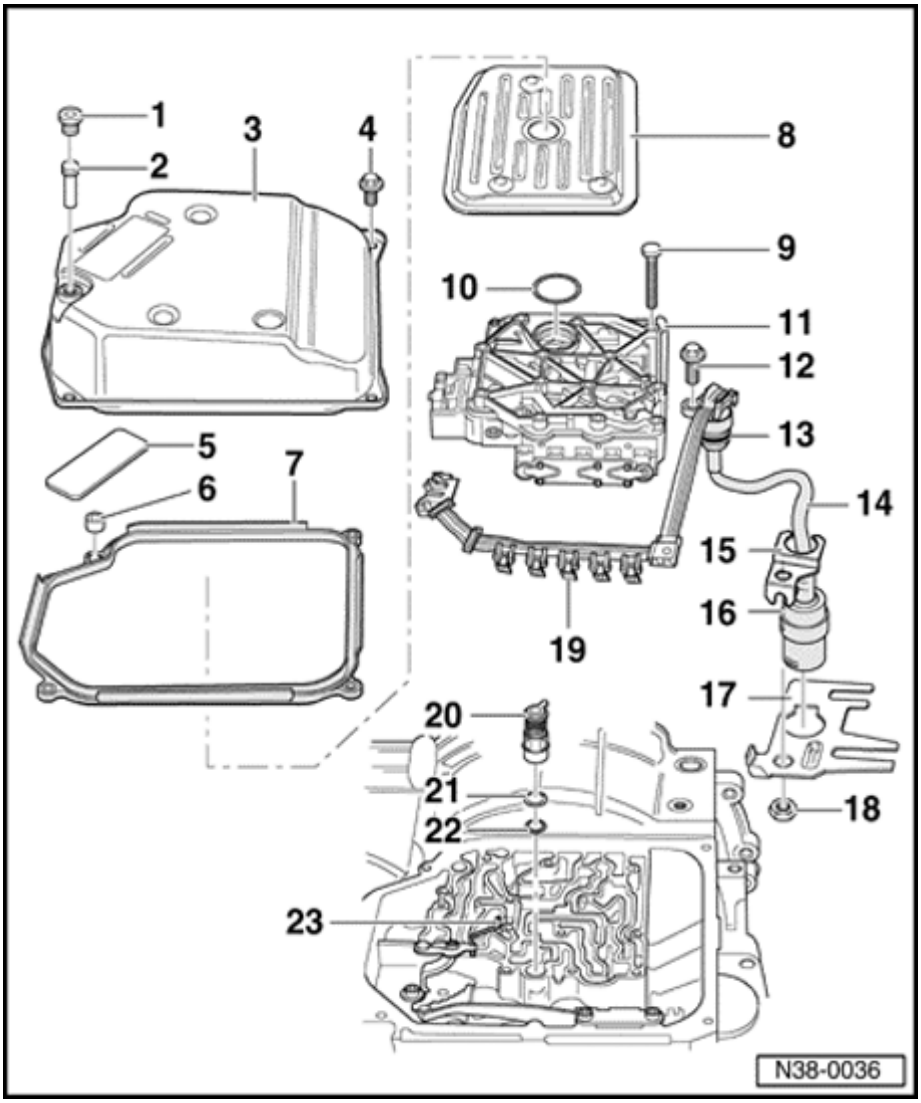

11 - Valve body

- Removing ⇒ Fig. 4
- Installing ⇒ Fig. 9
- Marking ⇒ Fig. 6
- Installing seal -item 10 -

12 - Bolt, 10 Nm (7 ft lb)

13 - O-ring

- For wiring transition piece
- Always replace

14 - Conductor strip

- With wiring transition piece and connector
- Can be removed and installed with transmission installed
- Remove solenoid valves with 3373 ⇒ Fig. 3

15 - Clip

16 - Wiring connector

- Attach to transmission housing

17 - Clip

- Insert lug of wiring connector in recess of clip

38-23

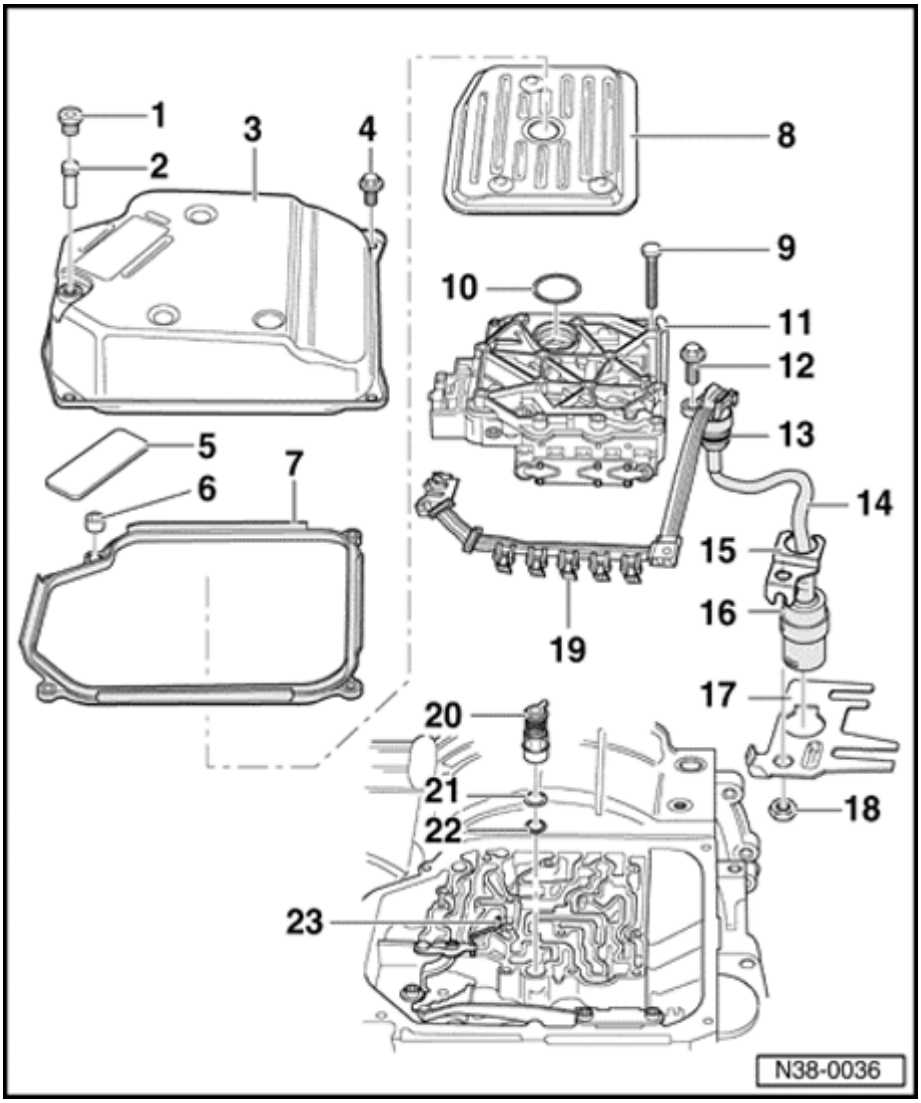

18 - Nut, 10 Nm (7 ft lb)

19 - Plug for solenoid valves

- Remove solenoid valves with 3373 ⇒ Fig. 3

20 - Sealing plug

- Take out before removing and installing free wheel
- Install so that lug is located in groove on housing ⇒ Fig. 5
- Place O-rings onto sealing plug

21 - O-ring

- Always replace

22 - O-ring

- Always replace

23 - Operating rod for manual selector valve

- Unhooking ⇒ Fig. 4
- Install with stepped side facing manual selector valve ⇒ Fig. 7
- Adjusting ⇒ Fig. 8

38-24

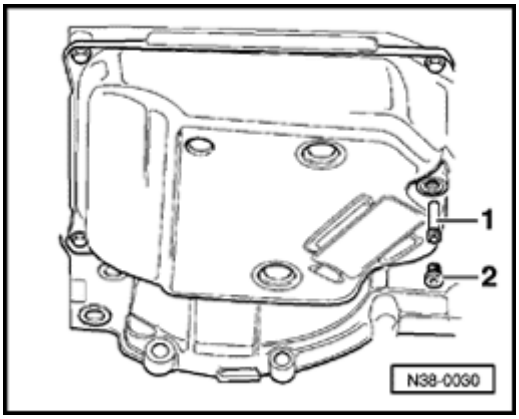

Fig. 1 ATF, draining

- Place container under transmission.
- Remove plug -2-.
- Remove overflow tube -1- and allow ATF to drain.
- Thread overflow tube in to stop.

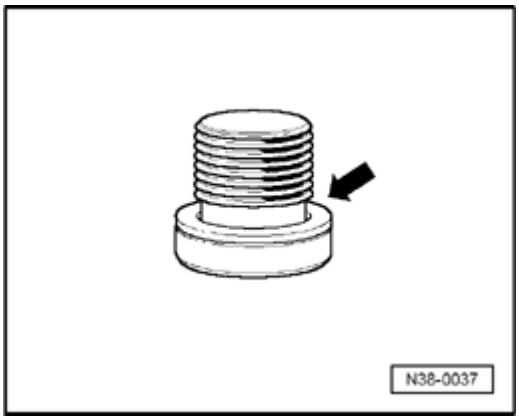

Fig. 2 Plug seal, replacing

- Cut open seal (arrow) with side cutters.
- After repairs install new seal to plug and thread in hand-tight to fill with ATF.
- Pour in 3 liters of ATF then check ATF level and top-up ⇒ Page 37-46 .

38-25

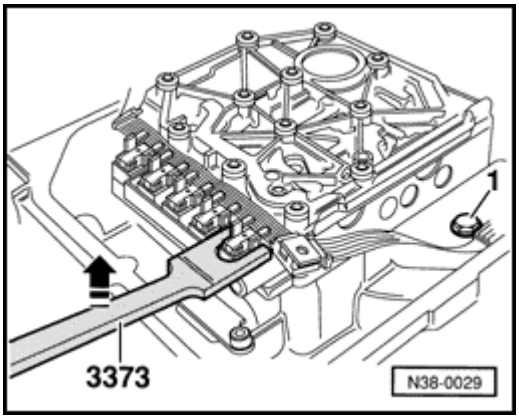

Fig. 3 Conductor strip, removing

- Place 3373 onto stop under solenoid valve plug.
- Pull plug off with 3373 in direction of (arrow).
- Remove bolt -1-.

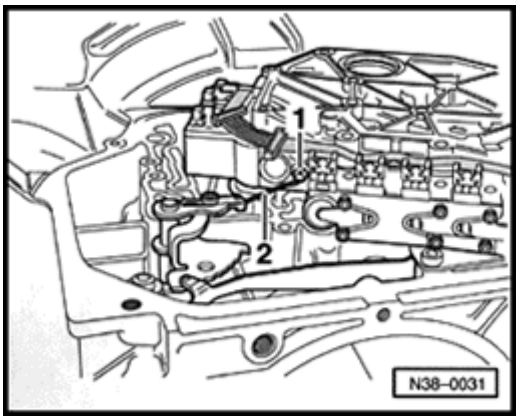

Fig. 4 Valve body, removing and unhooking operating rod

When removing the valve body the manual selector valve -1- remains in valve body.

- Pull manual selector valve out until it is just possible to unhook operating rod -2-.
- Secure manual selector valve so that it cannot fall out.

38-26

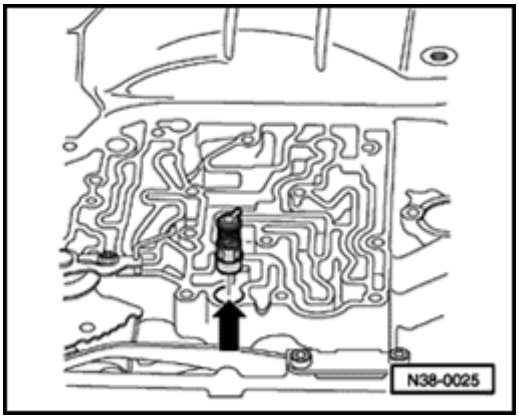

Fig. 5 Sealing plug, installing

Pull sealing plug out of housing before removing and installing free wheel or sealing plug and O-ring will be damaged.

- Install O-rings to sealing plug.
- Install sealing plug in hole in transmission housing (arrow).

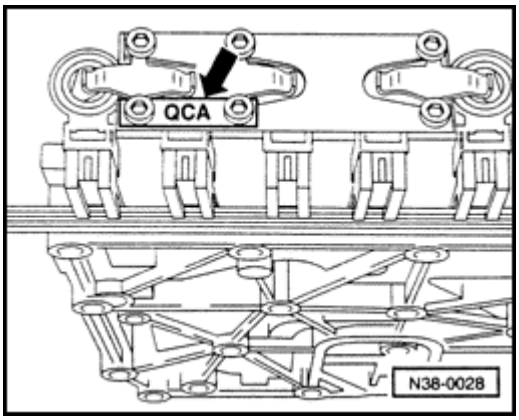

Fig. 6 Valve body, identification

Code letters are stamped on a metal tab. Metal tab must remain on valve body.

Allocation of valve bodies/transmissions ⇒ Page 00-6

38-27

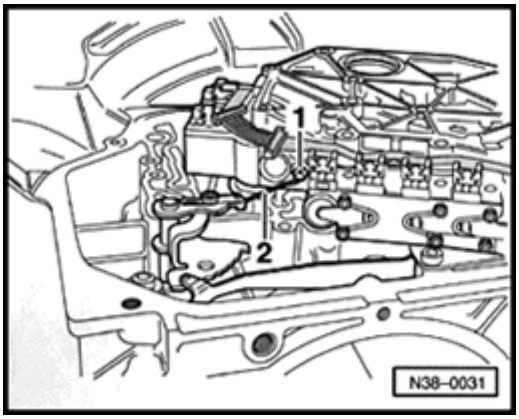

Fig. 7 Operating rod, unhooking from manual selector valve

- Turn manual selector valve -1- so that shoulder is to operating rod.
- Guide operating rod -2- with manual selector valve into valve body.

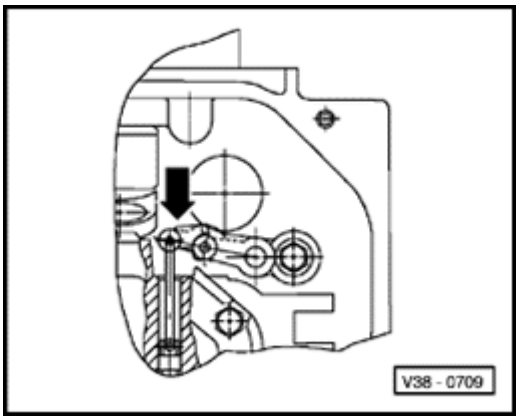

Fig. 8 Operating rod for manual selector valve, adjusting

- Move selector shaft to position "P".
- Push operating rod with manual selector valve into valve body up to stop (direction of arrow) and tighten bolt to 4 Nm (35 in. lb).

Note:

- *Manual selector valve must always be resting against the stop. Counter-hold in direction of (arrow) when tightening bolt.*
- *Always replace bolt and manual selector valve retaining clip.*

38-28

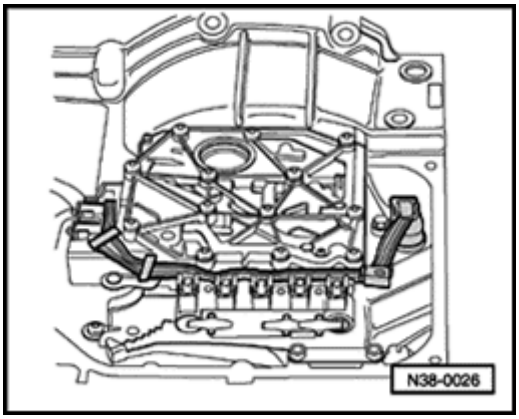

Fig. 9 Valve body, installing

- Route conductor strip as illustrated, when installing do not kink or twist.

Note:

When installing do not kink or twist the conductor strip.

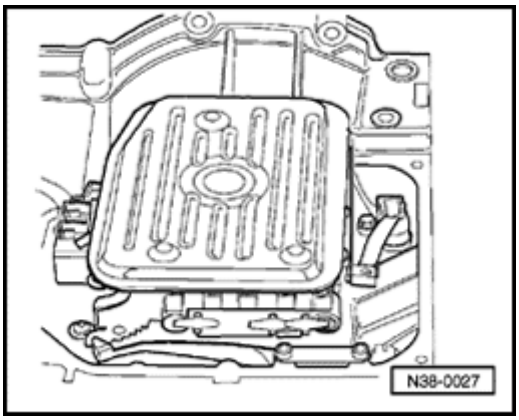

Fig. 10 ATF screen, installing

- Before installing ATF screen install seal in valve body.
- Firmly press ATF screen onto valve body.

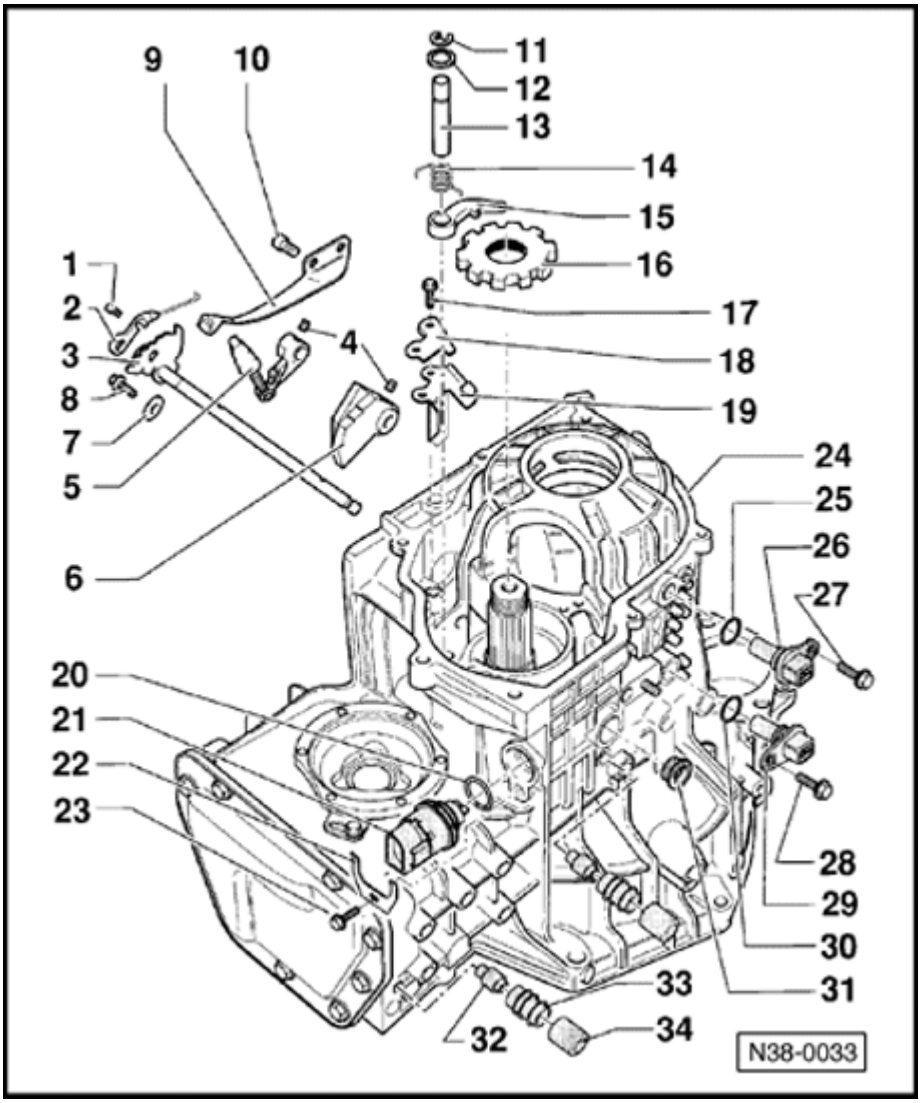

Parking lock, disassembling and assembling

Note:

- *Multi-function Transmission Range (TR) Switch -F125-, Transmission Vehicle Speed Sensor (VSS) -G38- and Vehicle Speed Sensor (VSS) -G68- can be tested in the vehicle with On Board Diagnostic (OBD) ⇒ Page 01-22*
- *The output gear must be removed to disassemble and assemble the parking lock, Removing and installing drive pinion, ⇒ Page 39-13 .*

1 - Bolt, 4 Nm (35 in. lb)

2 - Manual selector valve control

- Adjusting ⇒ Page 38-20 , Removing and installing valve body

3 - Selector shaft with selector segment

- Removing and installing ⇒ Fig. 2

38-30

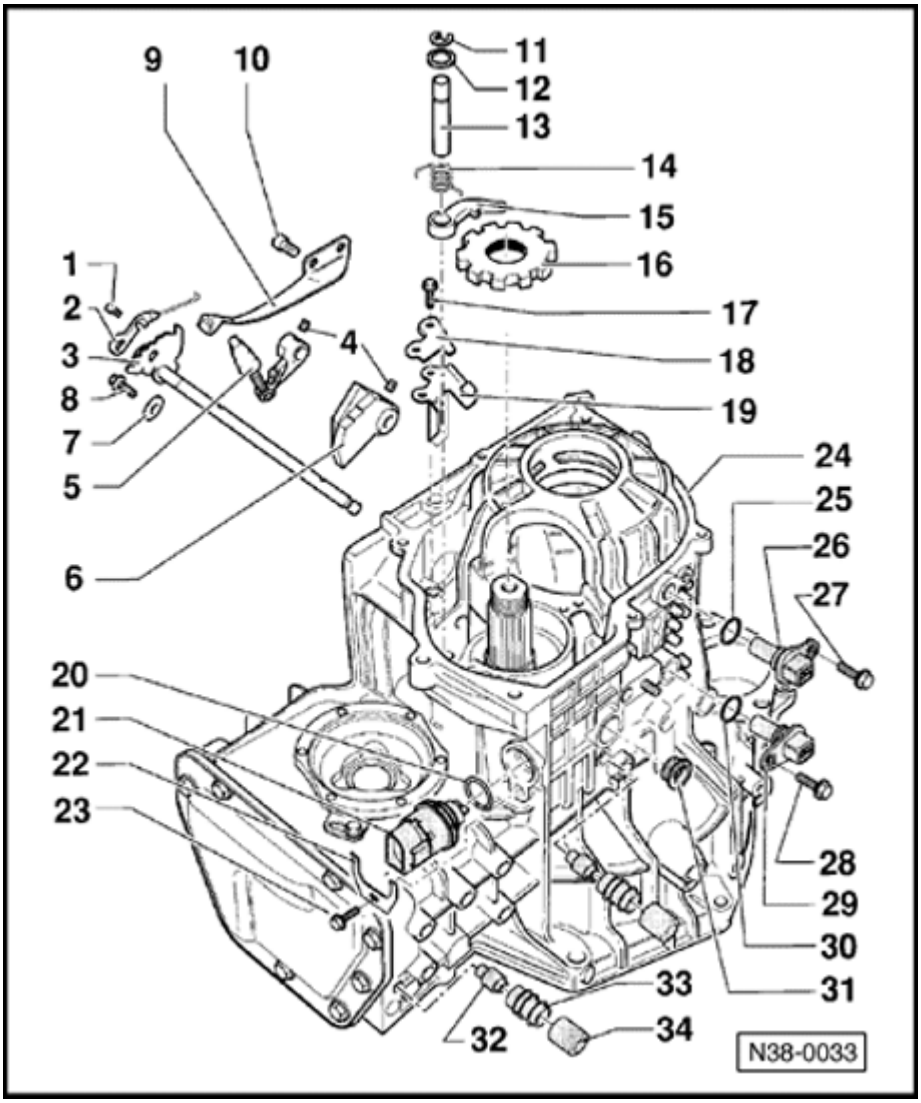

4 - Spring pin

- Driving out and in ⇒ Fig. 1

5 - Engaging lever

- Install together with selector shaft and detent segment

6 - Detent segment

- Install together with selector shaft and engaging lever

7 - Locking washer

8 - Bolt, 10 Nm (7 ft lb)

9 - Spring for selector segment

10 - Bolt, 10 Nm (7 ft lb)

11 - O-ring

- Always replace
- Only install on shafts with groove for circlip

12 - Washer

38-31

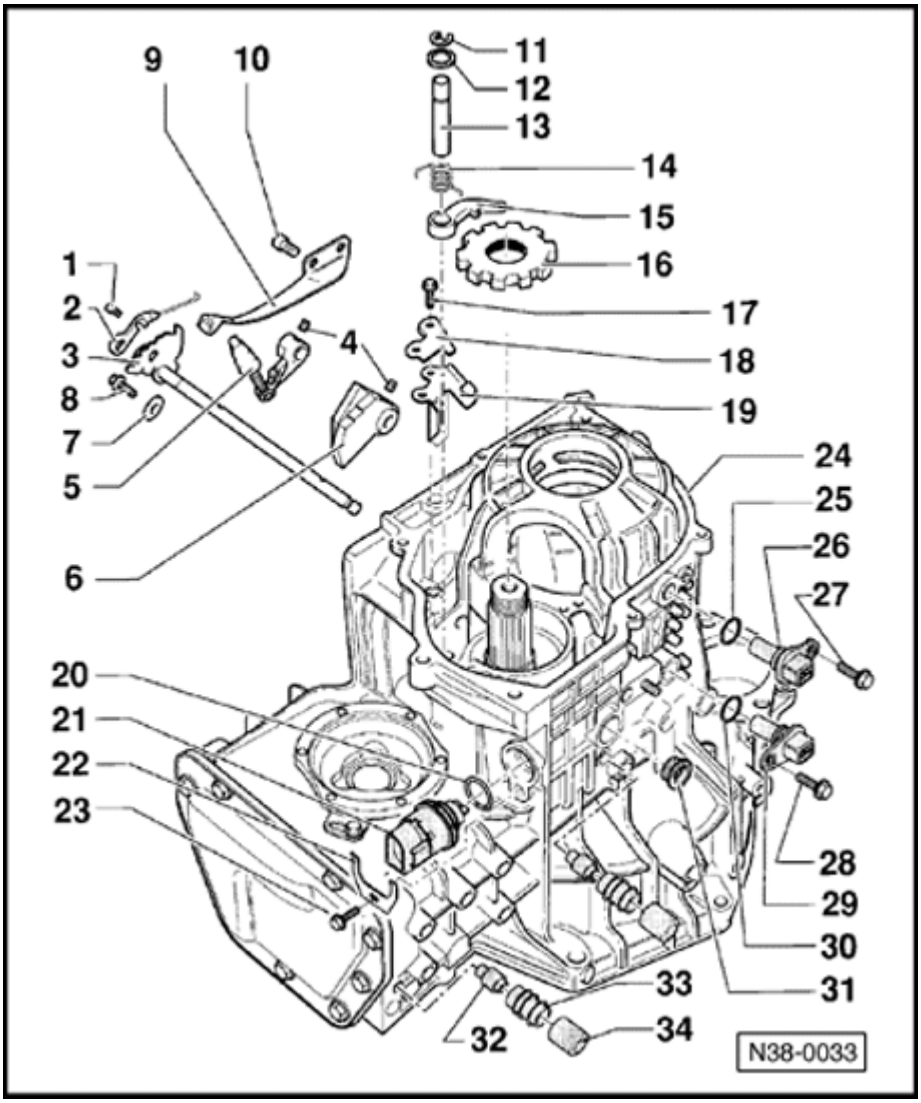

13 - Shaft for detent lever

- Is secured by circlip and bearing cap of drive pinion

14 - Return spring

- Inserting ⇒ Fig. 4

15 - Detent lever

- Installing with return spring ⇒ Fig. 4

16 - Parking lock gear

- Rounded side faces teeth of drive pinion

17 - Bolt, 14 Nm (10 ft lb)

18 - Supporting plate

- Installing ⇒ Fig. 3

19 - Guide plate

- Install before supporting plate ⇒ Fig. 3

38-32

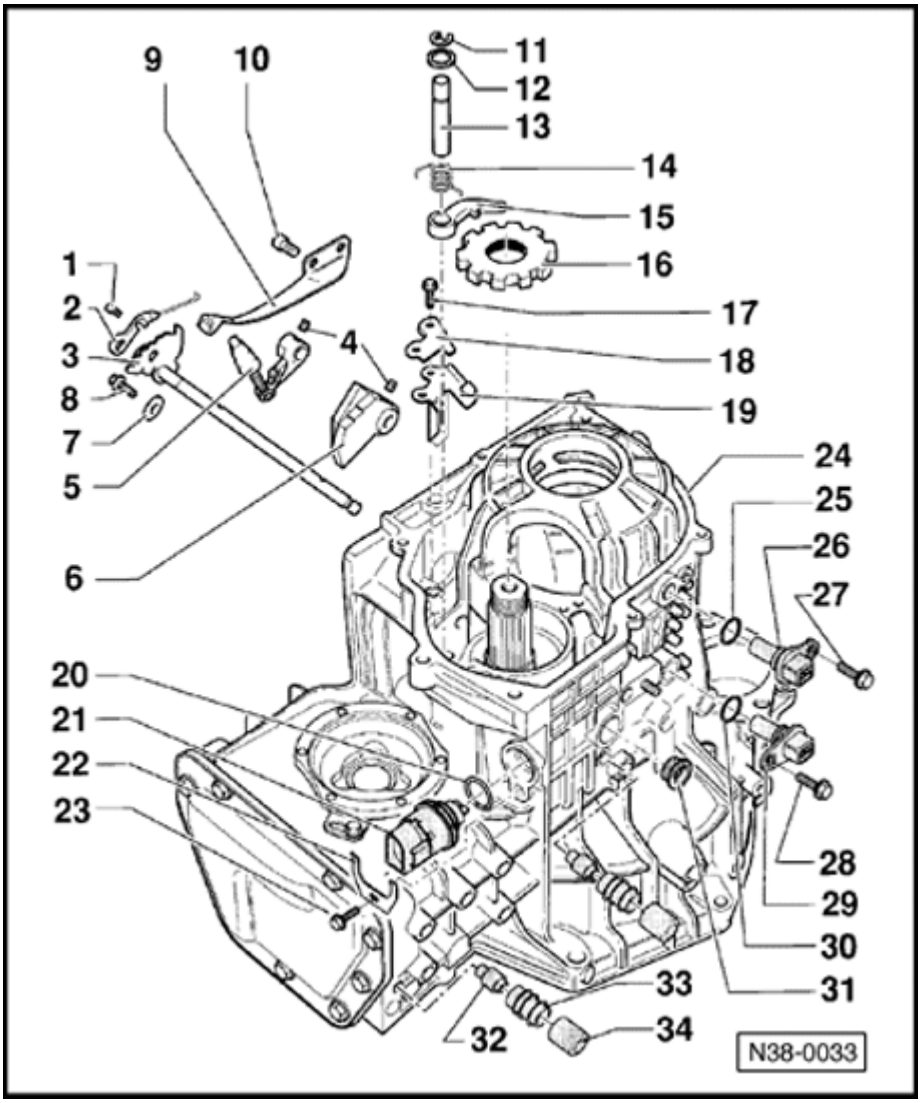

20 - O-ring

- Always replace

21 - Multi-function Transmission Range (TR) Switch -F125-

- Install so that 1 pin each is resting on a slope of detent segment
- Can be tested in vehicle by On Board Diagnostic (OBD) ⇒ Page 01-22

22 - Bracket

- For Multi-function TR Switch

23 - Bolt, 10 Nm (7 ft lb)

24 - Transmission housing

- It is not necessary to remove drive gear to disassemble parking lock

25 - O-ring

- Always replace

26 - Vehicle Speed Sensor (VSS) -G68-

- Can be tested in vehicle by On Board Diagnostic (OBD) ⇒ Page 01-22

38-33

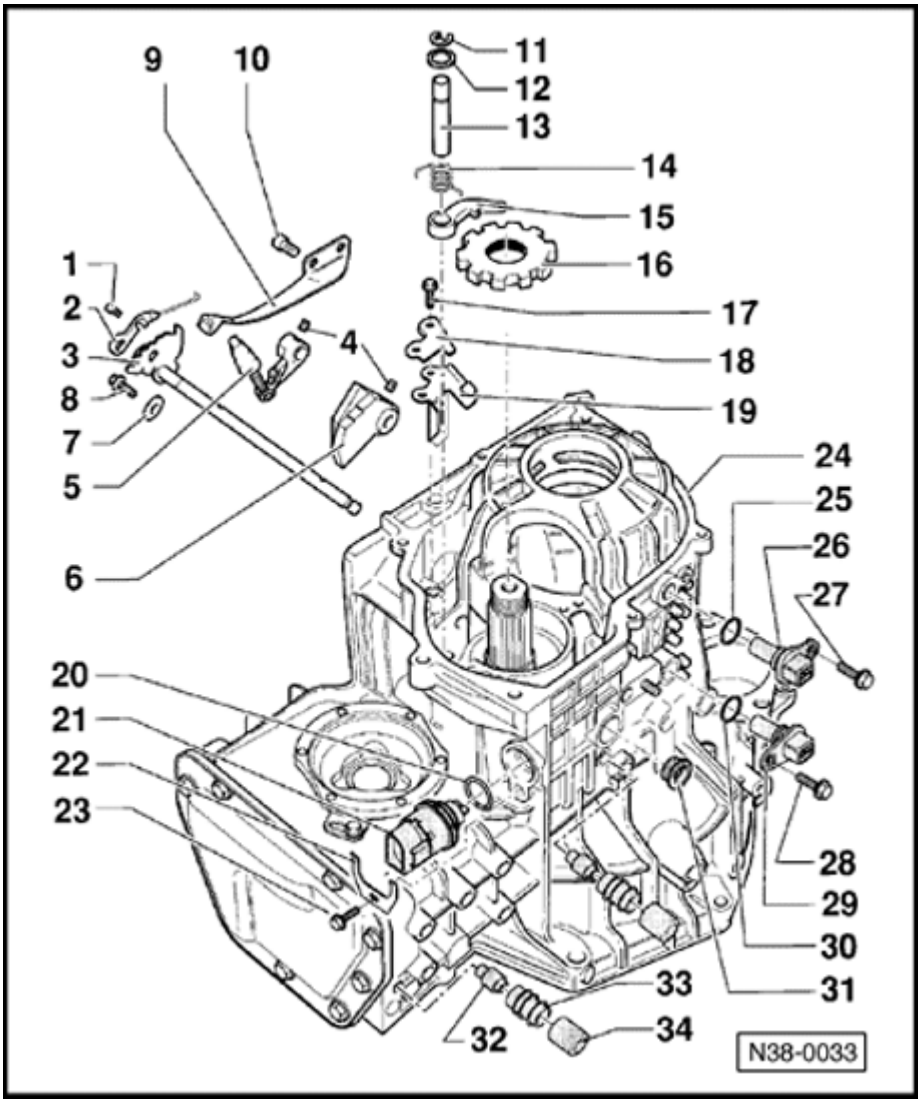

27 - Bolt, 10 Nm (7 ft lb)

28 - Bolt, 10 Nm (7 ft lb)

29 - Transmission Vehicle Speed Sensor (VSS) - G38-

- Can be tested in vehicle by On Board Diagnostic (OBD) ⇒ Page 01-22

30 - O-ring

- Always replace

31 - O-ring

- Pry out with screwdriver
- Drive in flush with VW 423

32 - Breather tube

- Remove using pliers
- Drive onto stop with drift VW 460/2

33 - Breather

34 - Breather cap

38-34

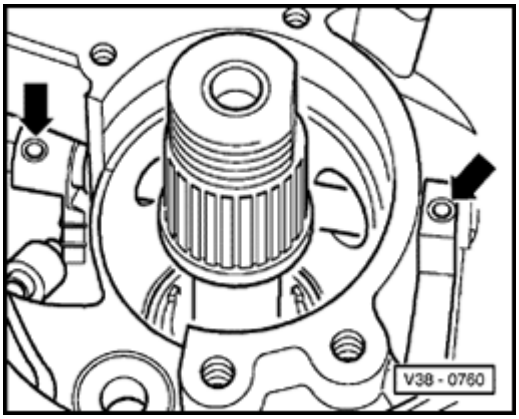

Fig. 1 Spring pin (arrow), driving out and in

Driving out

- Drive spring pin for engaging lever and spring pin for detent segment out only far enough to remove selector shaft.

Note:

Ensure that spring pin of engaging lever does not drop into planetary gearbox.

Driving in

- Drive in spring pins after installing selector shaft, engaging lever and detent segment.

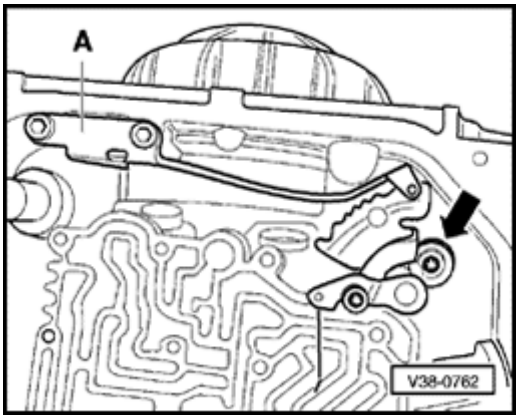

Fig. 2 Selector shaft with selector segments, removing and installing

With valve body installed do not damage the conductor strip.

- Remove selector segment spring -A-.
- Remove screw with washer (arrow).

The washer prevents selector shaft movement.

38-35

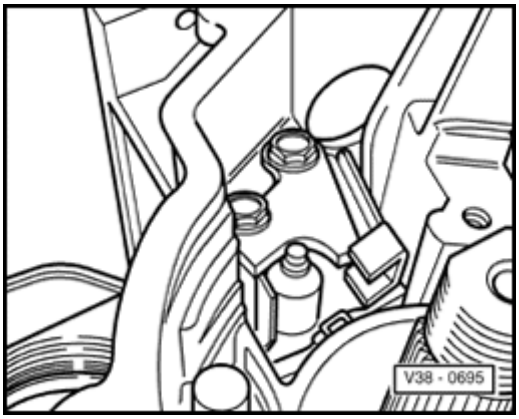

Fig. 3 Guide plate and supporting plate, installing

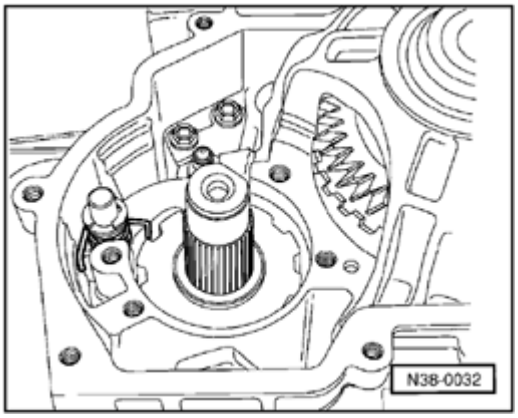

Fig. 4 Pawl with return spring, installing

Final drive oil level, checking

Oil level is checked with the transmission installed

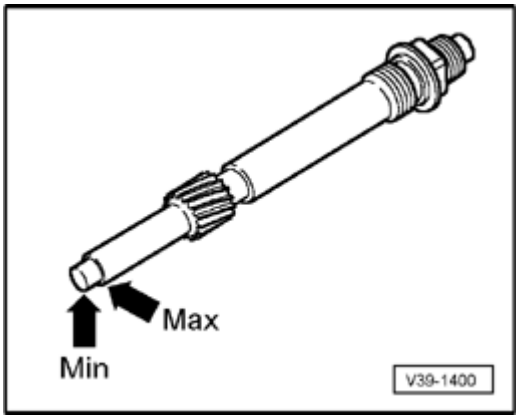

The difference between Min./Max. is 0.1 L. Excess oil can be removed using the V.A.G 1358A extraction system or EZ1 Fluid Evacuator.

Checking:

- Remove speedometer drive shaft and clean using a cloth.
- Install and remove speedometer drive shaft, check level and correct if necessary.

Note:

Final drive oil level must be between Min./Max. points of speedometer drive shaft

Specification and capacity of final drive ⇒ Page 00-10

39-2

Oil seal for drive flange, removing and installing

(Transmission installed)

- Disconnect drive shaft from drive flange.

When replacing right-hand oil seal:

- Remove balance weight.

- Lay drive shaft to one side and secure.

When replacing left-hand oil seal:

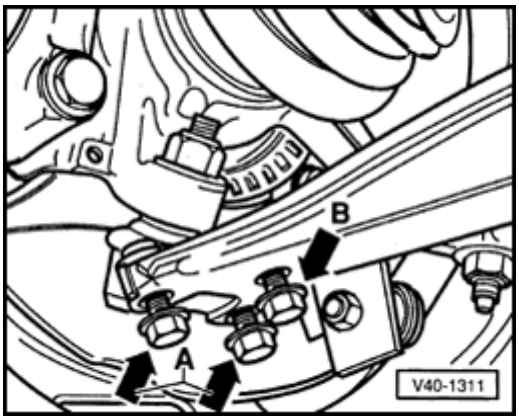

- Mark installation position of ball joint/control arm mounting bolts and:
  - Remove outer bolts (arrow A),
  - Loosen inner bolt (arrow B).
- Turn steering to right, full lock.
- Swing ball joint out and place left-hand drive shaft to one side.
- Pierce sealing cap in drive flange with a screwdriver and pry out.

39-3

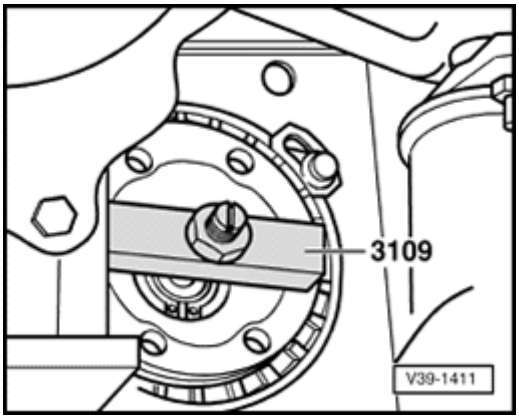

- Mount installation tool 3109 and remove circlip.

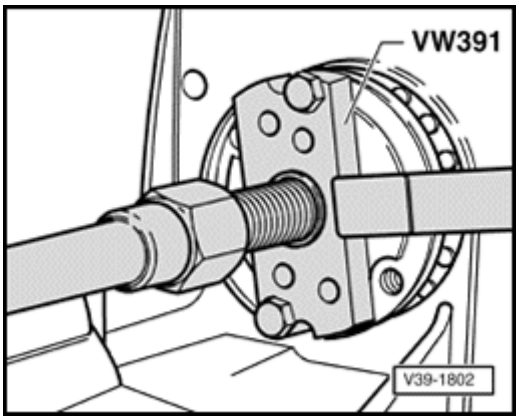

- Pull off drive flange with VW 391.

Note:

On vehicles with flange for Tripodic drive shaft the joint flange is removed with ukko 18-0 puller and two 8x35 mm bolts with 8 mm diameter washers.

- Pull out drive flange oil seal with VW 681.

39-4

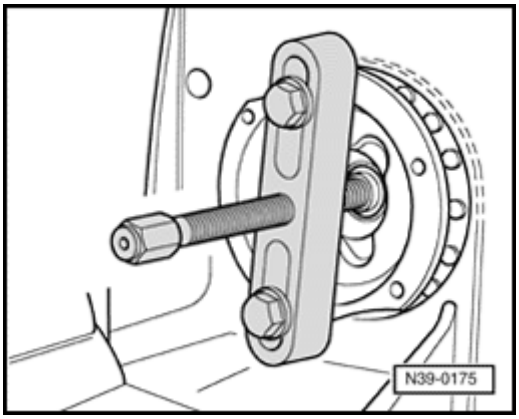

- Pull off drive flange for tripodic drive shaft.
- Bolt puller Kukko 18-0 using two 8x35 mm bolts and 8 mm diameter washers to flange.
- Pull out drive flange oil seal with VW681

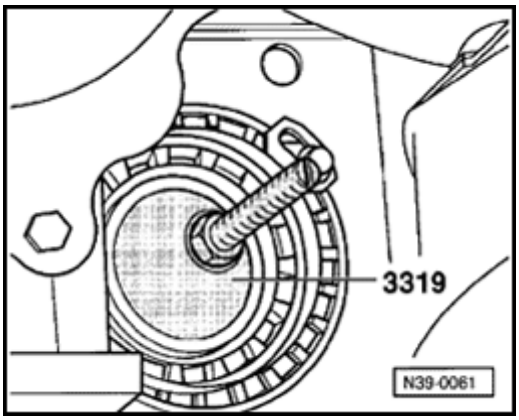

- Pull new oil seal in up to stop with press piece 3319, M10 threaded rod (approx. 80 mm or 3 1/4 in. long) and nut with washer.
- Fill space between seal and dust lip with multi-purpose grease.

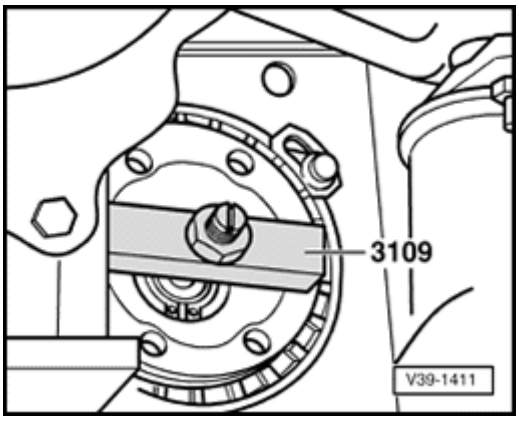

- Install drive flange, dished washer and circlip.

- Pull drive flange in.

Note:

Drive flange can also be pulled in with VW 391.

- Install circlip and seal drive flange with cover.
- Install drive shaft.
- Reconnect ball joint to control arm.
- With transmission installed, check final drive oil level ⇒ Page 39-1 .

Tightening torque:

Drive shaft to drive flange	45 Nm (33 ft lb)
Ball joint to control arm	35 Nm (26 ft lb)

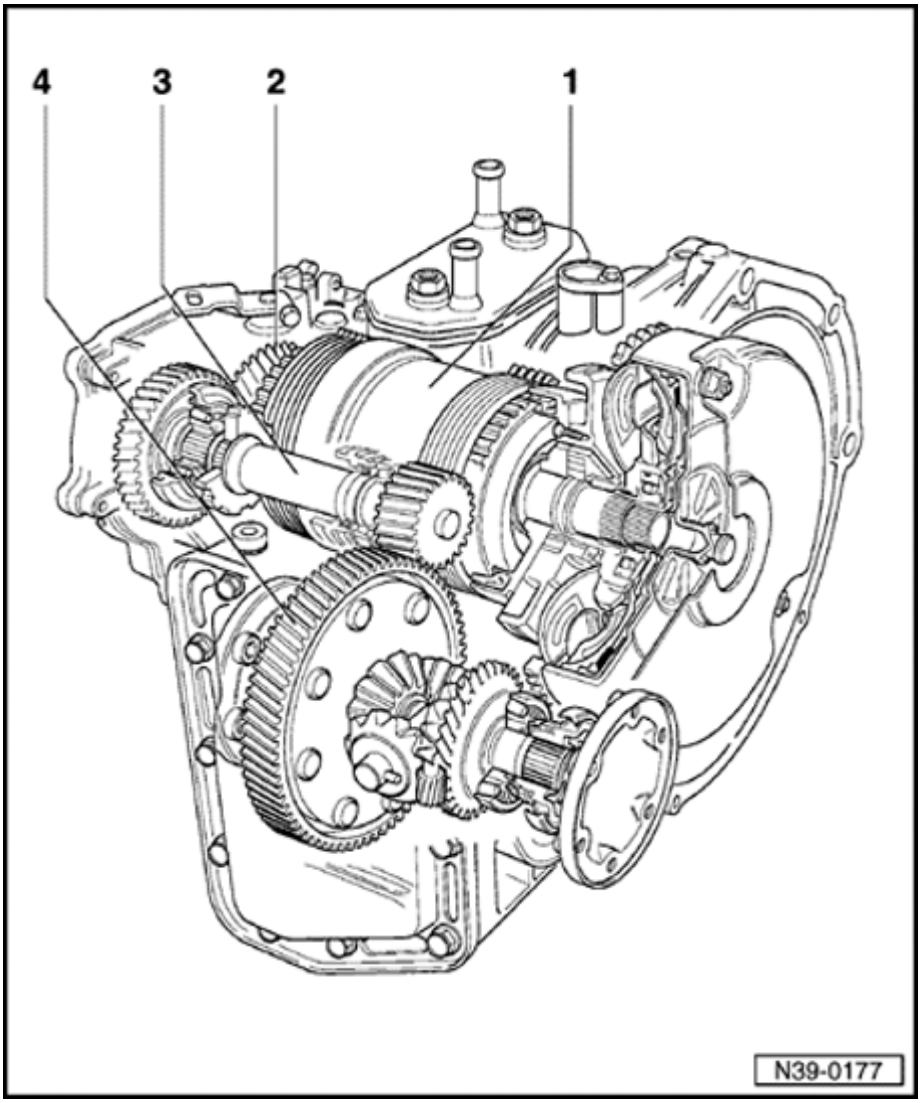

Final drive, disassembling and assembling

Repair overview

1 - Planetary gear

- Disassembling and assembling ⇒ Page 37-59

2 - Input gear

- Removing and installing ⇒ Page 39-8
- Adjusting ⇒ Page 39-46
- Adjusting final drive (overview) ⇒ Page 39-39

Note:

Repairs on the input gear can only be performed after the component parts of the planetary gear have been removed.

39-7

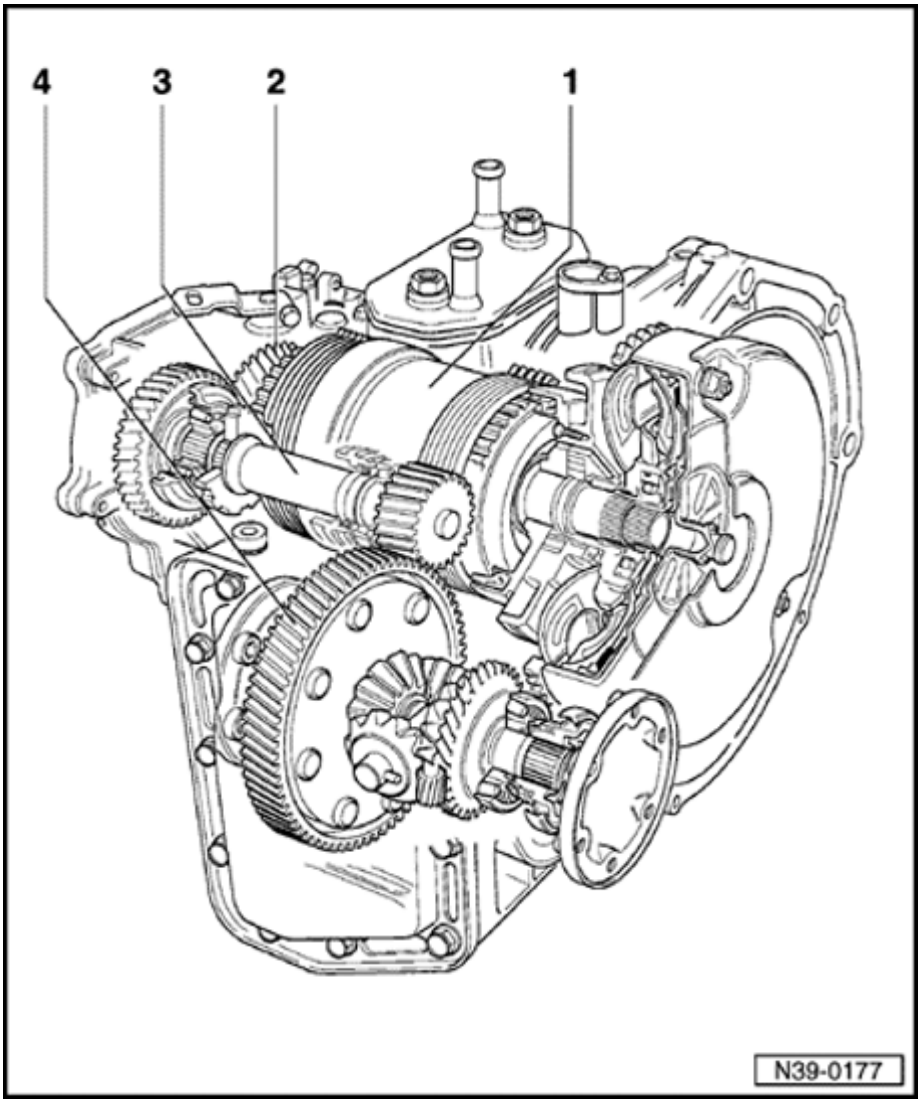

3 - Drive pinion

- Removing and installing ⇒ Page 39-13
- Adjusting ⇒ Page 39-42
- Adjusting final drive (overview) ⇒ Page 39-39

4 - Differential

- Removing and installing ⇒ Page 39-22
- Disassembling and assembling ⇒ Page 39-32
- Adjusting ⇒ Page 39-49
- Adjusting final drive (overview) ⇒ Page 39-39

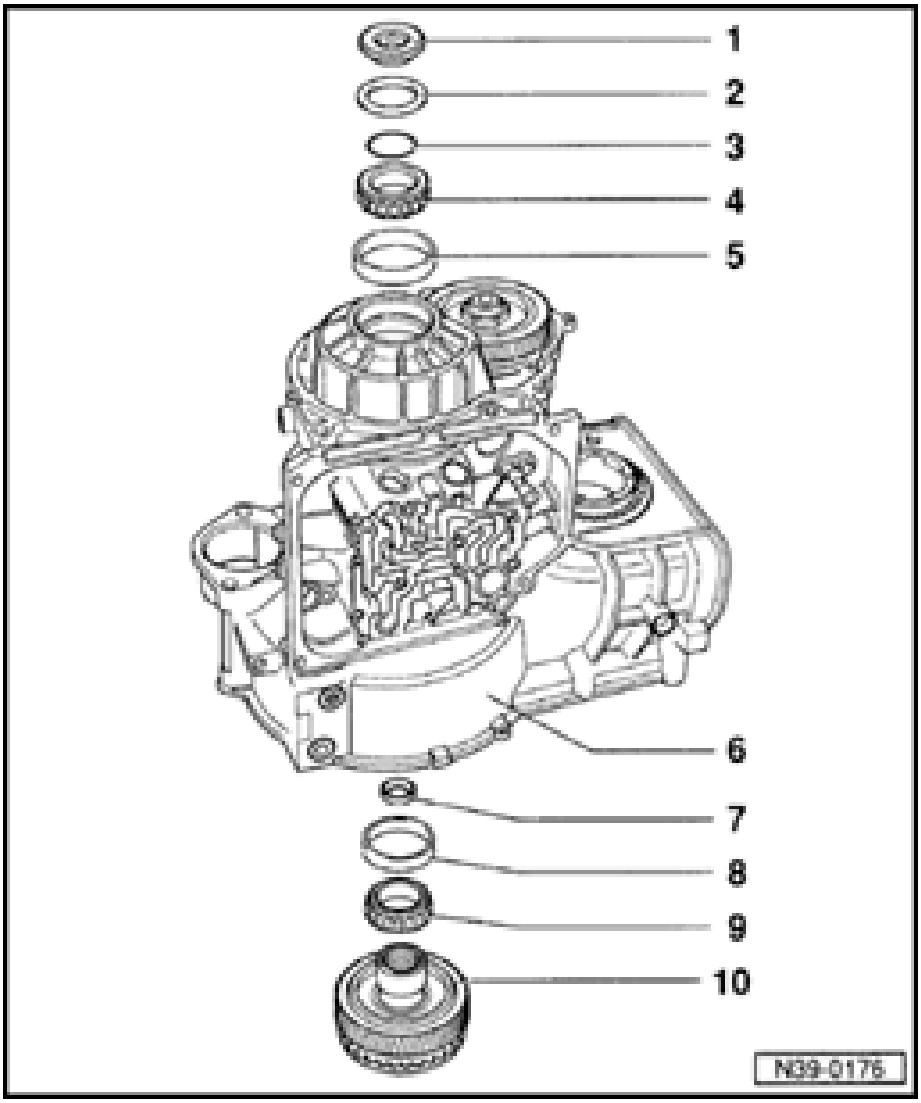

Input gear, removing and installing

Note:

Drive pinion and differential do not need to be removed.

1 - Socket-head fastener, 250 Nm (184 ft lb)

- Engage parking lock to remove and install
- Use 22 mm hex socket
- Before installing socket-head fastener insert axial needle bearing (item 7)

2 - Dished washer

- Curved side faces socket-head fastener

3 - Shim

- Determining thickness ⇒ Adjusting input gear, ⇒ Page 39-46

39-9

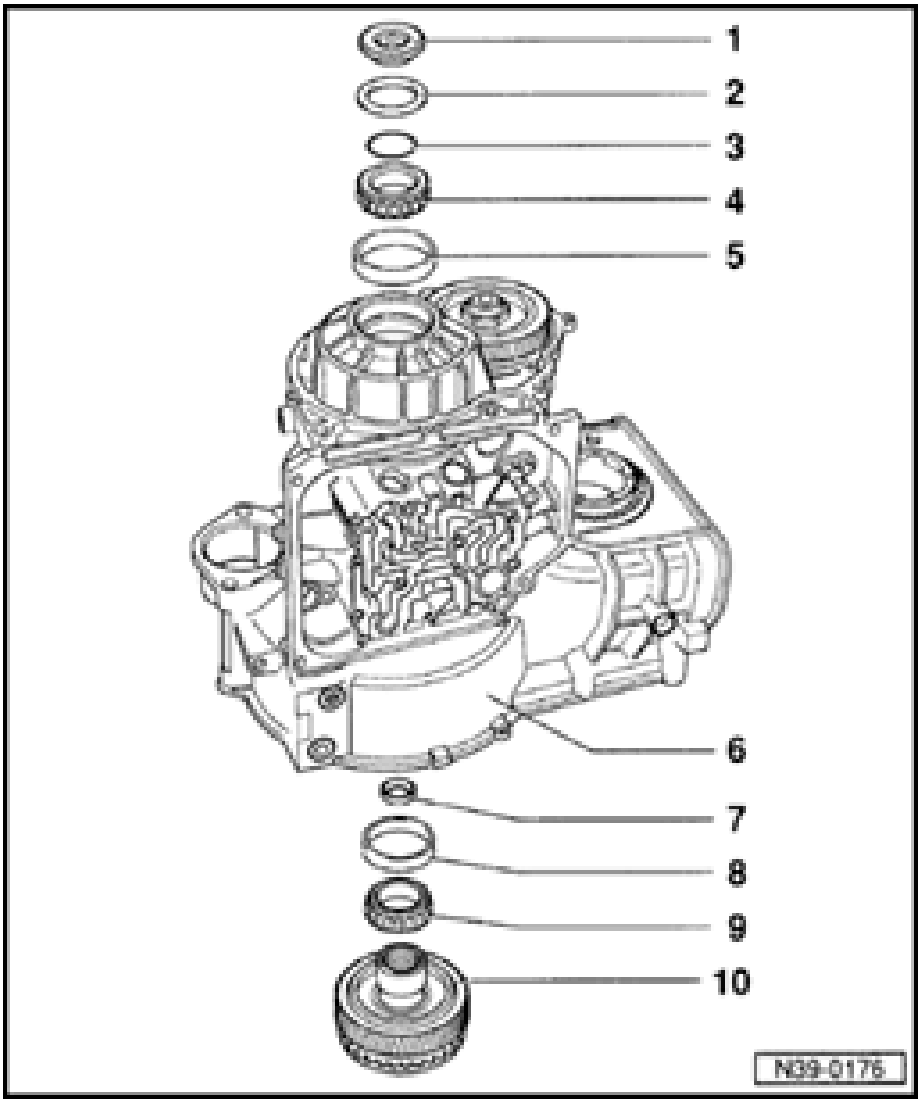

4 - Tapered roller bearing inner race

- After measuring thickness of shim, install on input gear with locking fluid AMV 185 101 A1 ⇒ Fig. 3

5 - Tapered roller bearing outer race

- Drive out with drift
- Drive in with 30-205
- Insert with locking fluid AMV 185 101 A1

6 - Transmission housing

7 - Axial needle bearing

- Install with flat side facing input gear
- Insert into input gear before installing socket-head fastener (item 1)

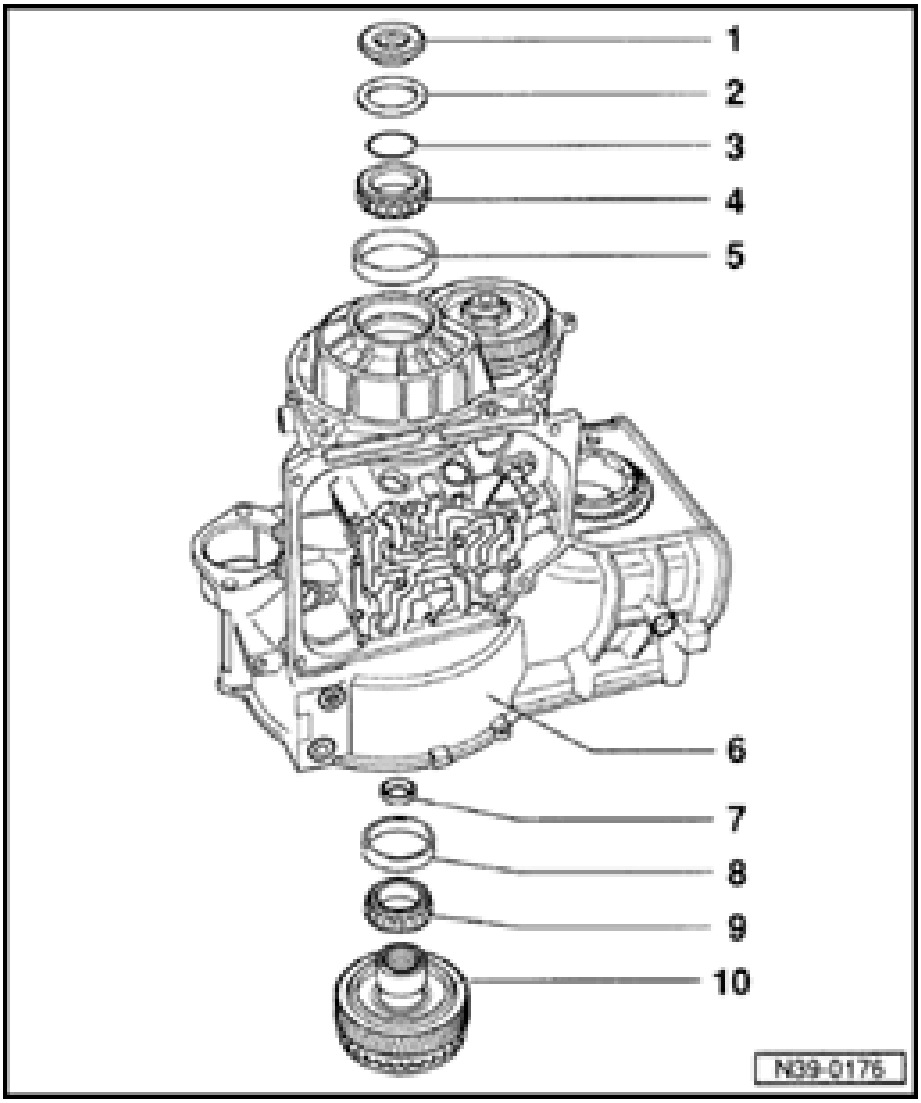

8 - Tapered roller bearing outer race

- Drive out with drift
- Drive in with 30-205 and appropriately long drift
- Insert with locking fluid AMV 185 101 A1

9 - Tapered roller bearing inner race

- Pulling off ⇒ Fig. 1
- Pressing on ⇒ Fig. 2
- Insert with locking fluid AMV 1 85 1 01 A1 ⇒ Fig. 3

10 - Input gear

- With impulse wheel for Vehicle Speed Sensor (VSS) -G68-
- Number of teeth ⇒ Page 00-6
- Adjusting ⇒ Page 39-46
- If signs of damage exist, always replace input gear and output gear together
- Removing ⇒ Fig. 4

Note:

If input gear is replaced, adjust planet carrier ⇒ Page 37-91 .

39-11

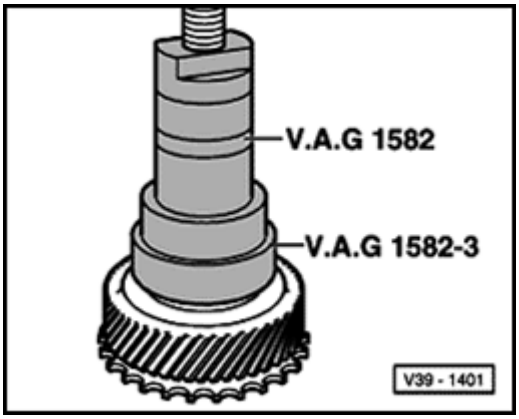

Fig. 1 Tapered roller bearing inner race, pulling off

- Place press piece on input gear.

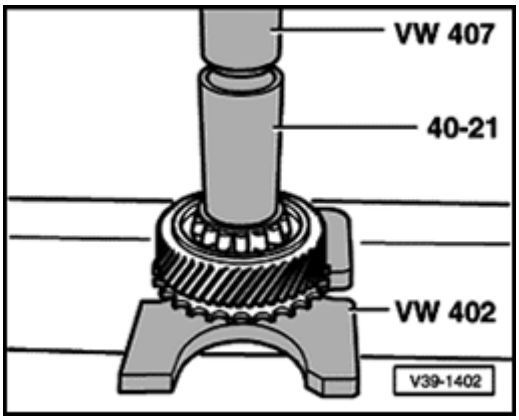

Fig. 2 Tapered roller bearing inner race, pressing on

Note:

A press piece must be placed below the hub of the input gear to avoid damaging the input gear.

39-12

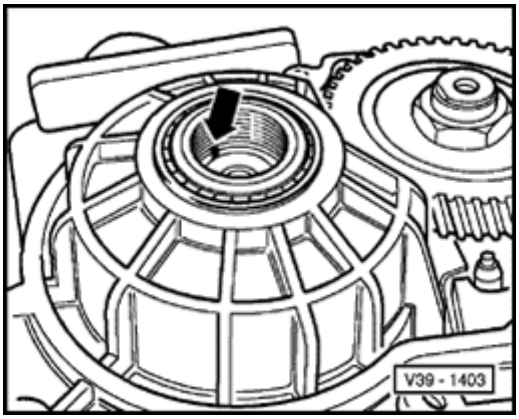

Fig. 3 Tapered roller bearing inner race, installing

- Install tapered roller bearing inner race with AMV 185 101 A1.

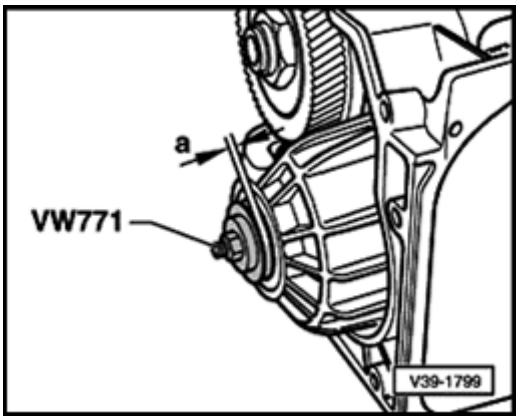

Fig. 4 Input gear, removing

- Install socket-head fastener without dished washer, shim and axial needle bearing far enough for a gap, size a = 3 mm, to exist between socket-head fastener and tapered roller bearing inner race.
- Drive out input gear with VW 771 as far as the stop of the tapered roller bearing inner race.
- Remove VW 771 and take out input gear.

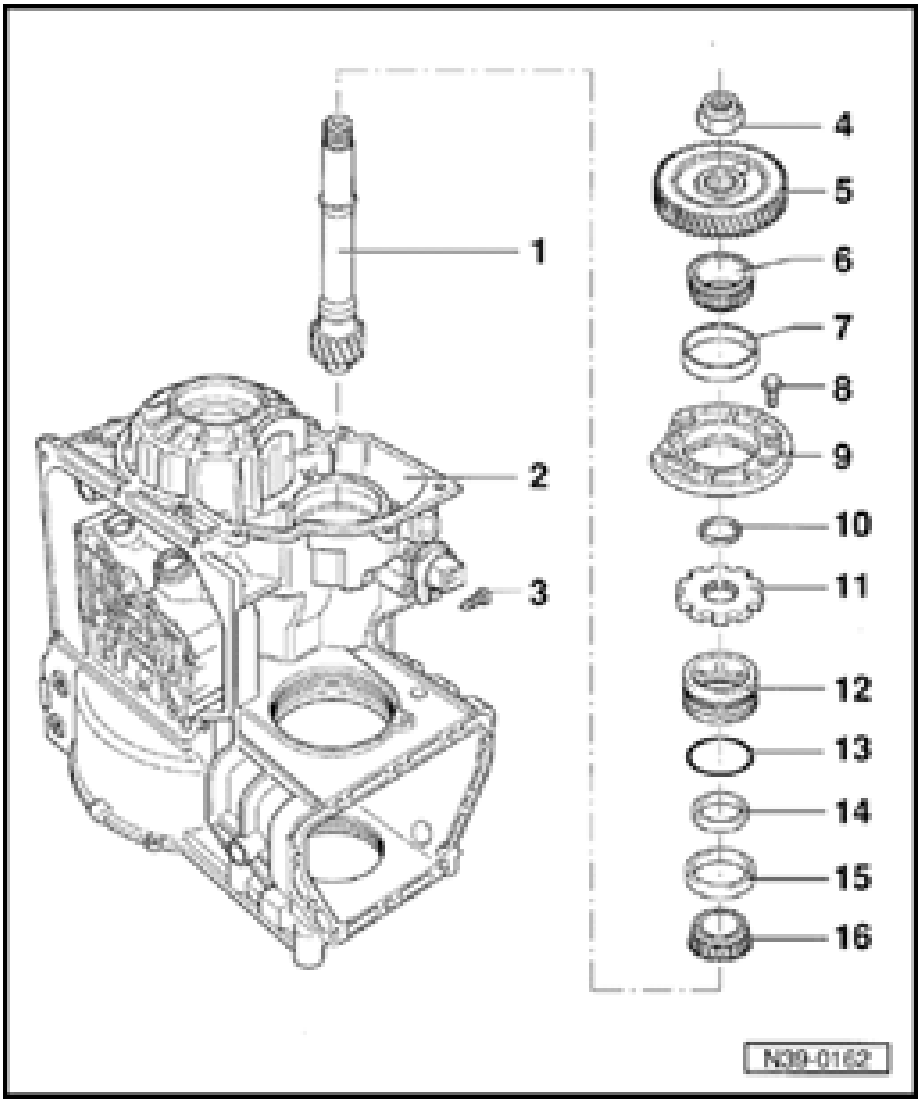

Drive pinion, removing and installing

To remove the drive pinion, the selector shaft must be removed after taking out the parking lock ⇒ Page 38-29, disassembling and assembling parking lock.

1 - Drive pinion

- Number of teeth ⇒ Page 00-6
- Adjusting ⇒ Page 39-42
- Removing ⇒ Fig. 8

2 - Transmission housing

3 - Screw, 12 Nm (9 ft lb)

- Remove screw before removing or installing bearing supporting ring -item 12 -.
- Install with sealing compound AKD 456 000 01

39-14

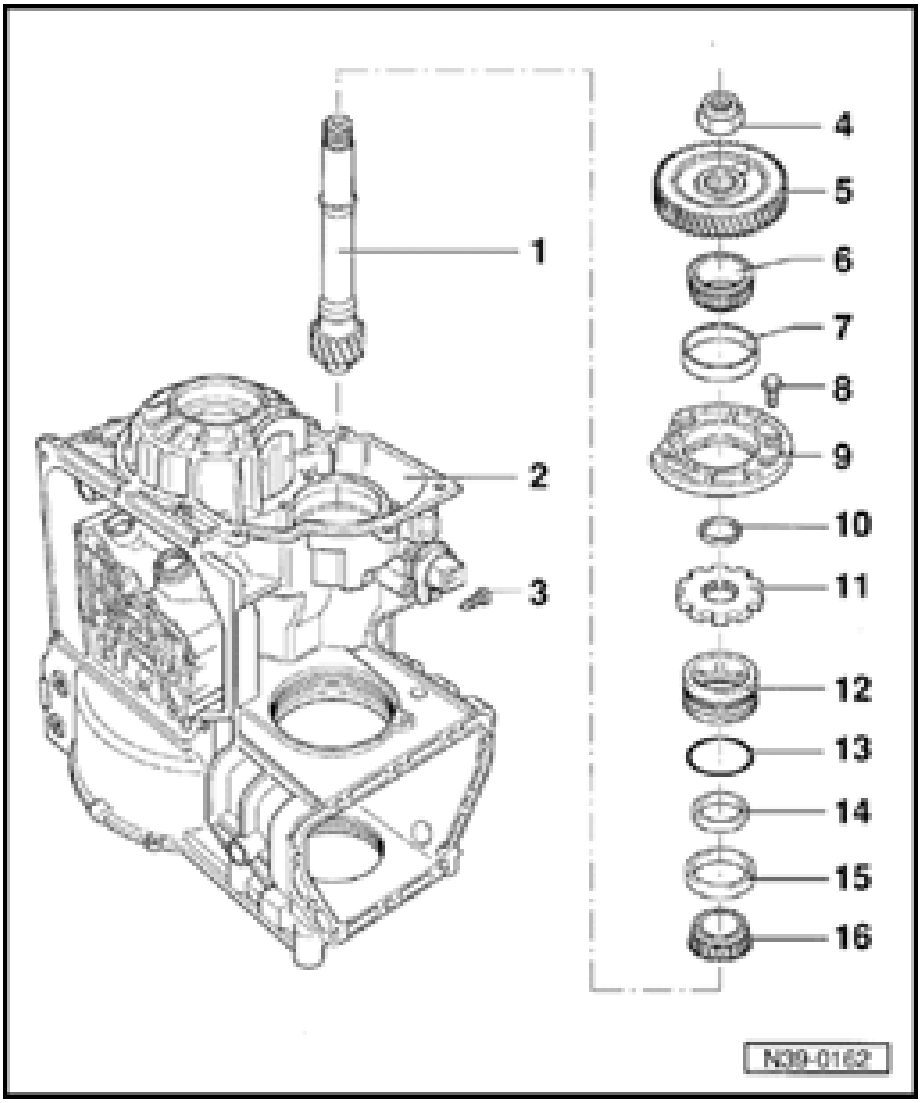

4 - Hex nut, 250 Nm (184 ft lb)

- Engage parking lock to remove or install
- Secure with drift

5 - Output gear

- Number of teeth ⇒ Page 00-6
- Pulling off ⇒ Fig. 1
- If signs of damage exist, always replace input gear and output gear together

6 - Tapered roller bearing inner race

- Pulling off ⇒ Fig. 2
- Pressing on ⇒ Fig. 3

7 - Tapered roller bearing outer race

- Drive out with drift
- Pressing in ⇒ Fig. 4

8 - Bolt, 25 Nm (18 ft lb)

9 - Bearing cap

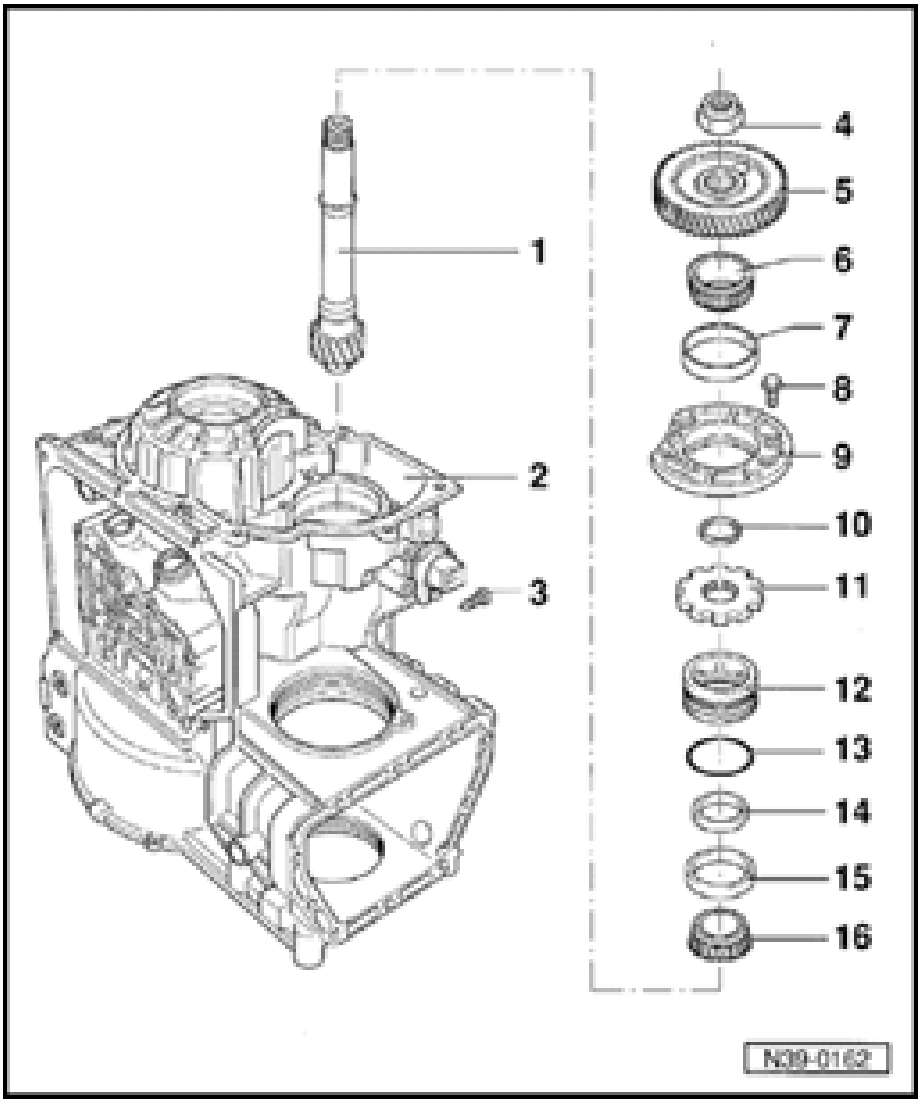

10 - Shim

- Determining thickness ⇒ Page 39-3 , Adjusting drive pinion

11 - Parking lock gear

- Rounded side faces teeth of drive pinion

12 - Bearing supporting ring, 200 Nm (148 ft lb)

- Remove screw -item 3 - before removing or installing bearing supporting ring.
- Removing or installing ⇒ Fig. 5
- Bearing supporting ring cannot be unscrewed until the selector shaft has been removed ⇒ Page 39-28 ,
- Disassembling and assembling parking lock
- Install bearing supporting ring carefully. Sealing lip and spring must not be damaged.
- Supporting ring with seal ⇒ Fig. 6

39-16

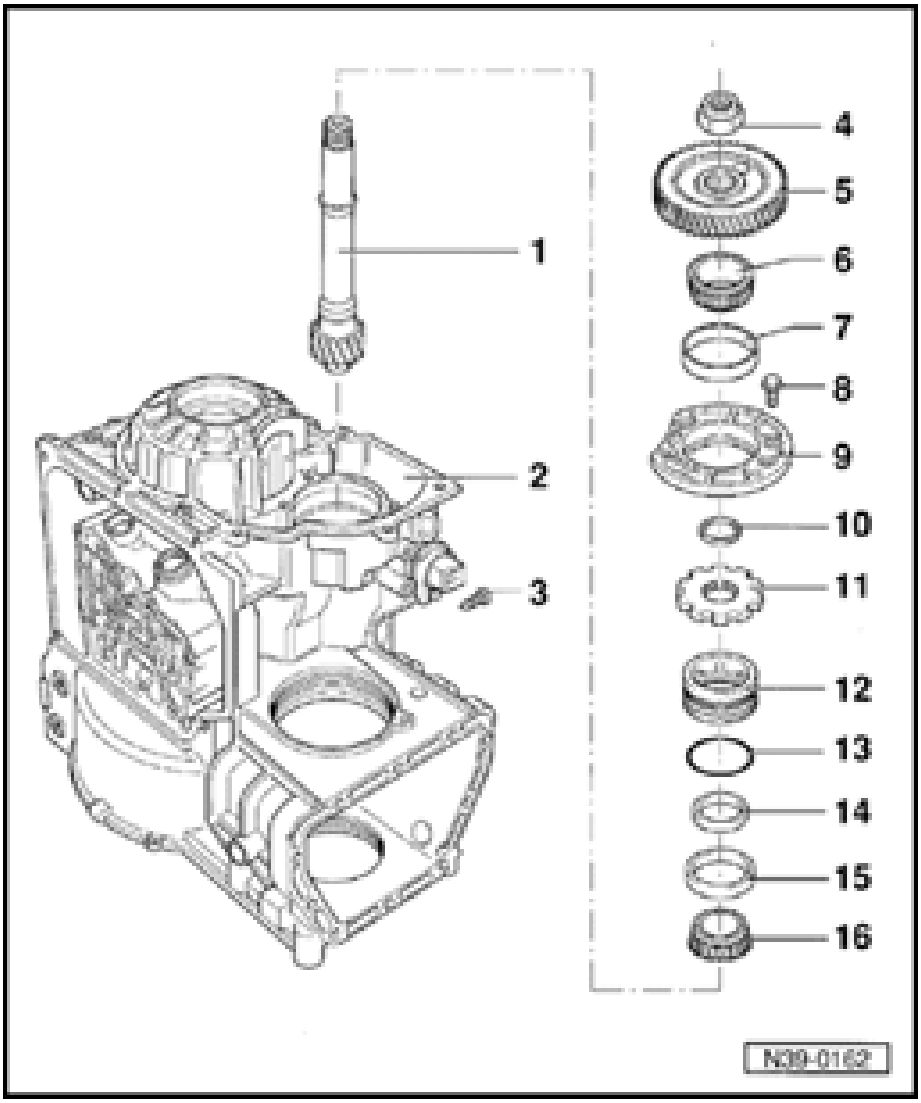

13 - O-ring

- Always replace
- Place onto bearing supporting ring -item 12 -

14 - Oil seal for drive pinion

- Remove with screwdriver
- Installation position ⇒ Fig. 6
- Driving in ⇒ Fig. 7

15 - Tapered roller bearing outer race

- Driving in ⇒ Fig. 9

16 - Tapered roller bearing inner race

- Drive off with drift
- Pressing on ⇒ Fig. 10

39-17

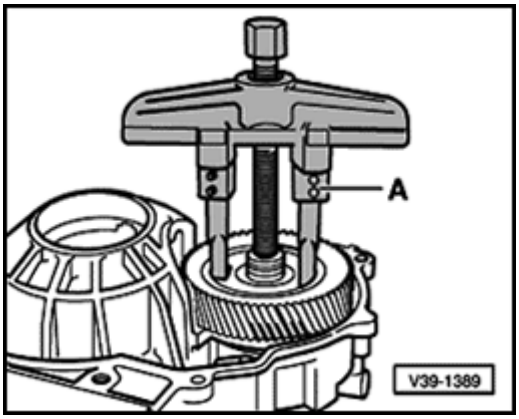

Fig. 1 Output gear, pulling off

A - Kukko 20-10 and Matra V 172 pulling hooks.

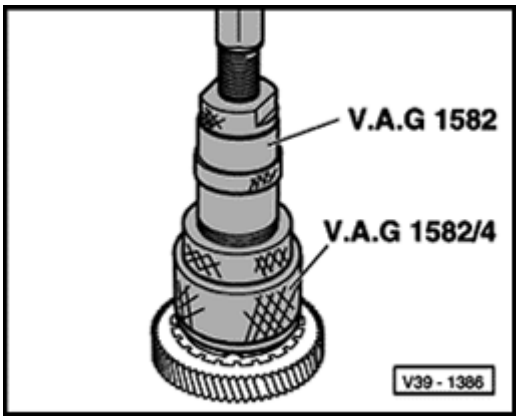

Fig. 2 Tapered roller bearing inner race, pulling off

- Place press piece onto collar of output gear.

39-18

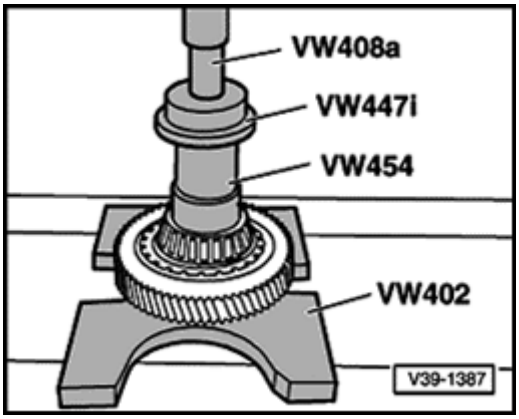

Fig. 3 Tapered roller bearing inner race, pressing on

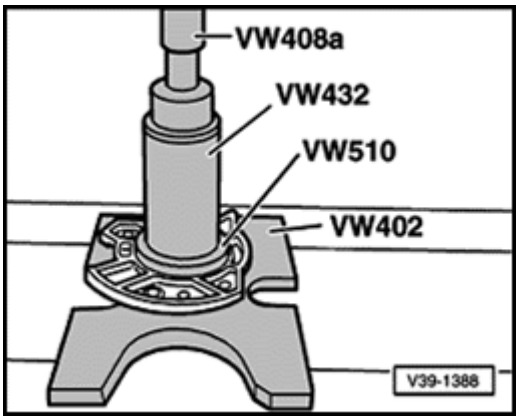

Fig. 4 Tapered roller bearing outer race, pressing in

39-19

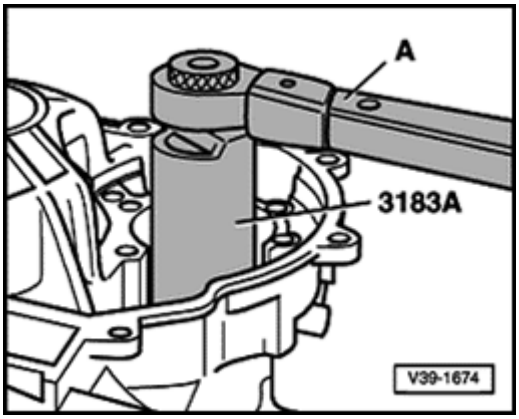

Fig. 5 Bearing supporting ring, removing and installing

Remove locking bolt.

A - Torque wrench

- Tighten bearing supporting ring to 200 Nm (148 ft lb) and secure with locking screw. Install screw with AKD 456 000 01 thread sealing compound.

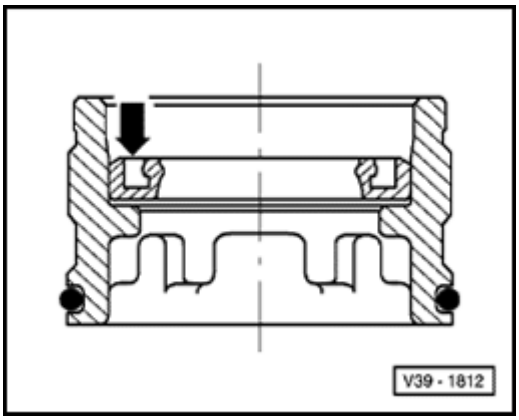

Fig. 6 Bearing supporting ring with seal for drive pinion

Installation position of seal:

Open side (arrow) faces towards tapered roller bearing outer race

39-20

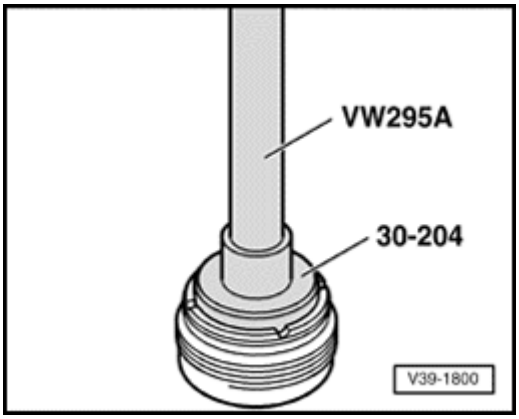

Fig. 7 Drive pinion oil seal, driving in

- Install oil seal so that sealing lip faces special tool 30-204.

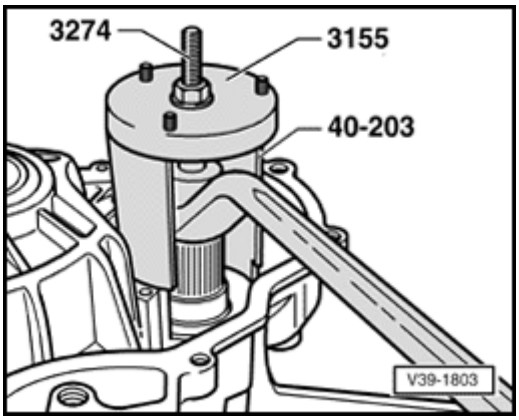

Fig. 8 Drive pinion, removing

39-21

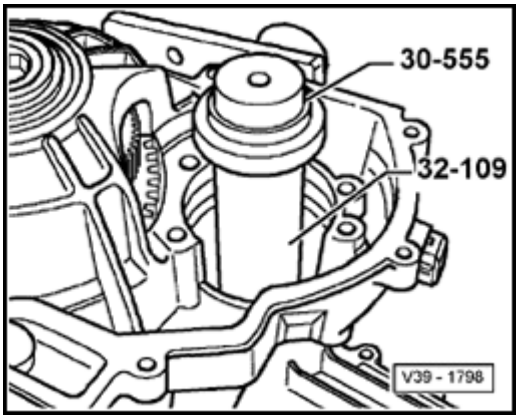

Fig. 9 Tapered roller bearing outer race, driving in

- Insert drive pinion with tapered roller bearing inner race, then drive in outer race.

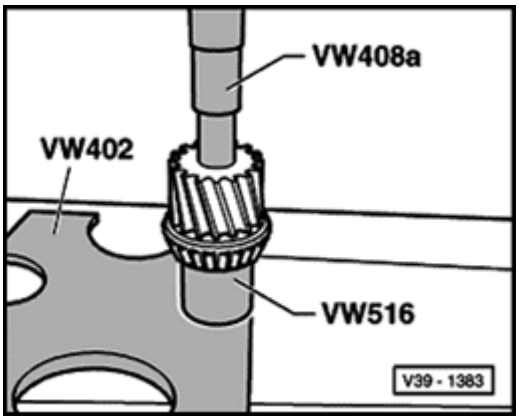

Fig. 10 Tapered roller bearing inner race, pressing on

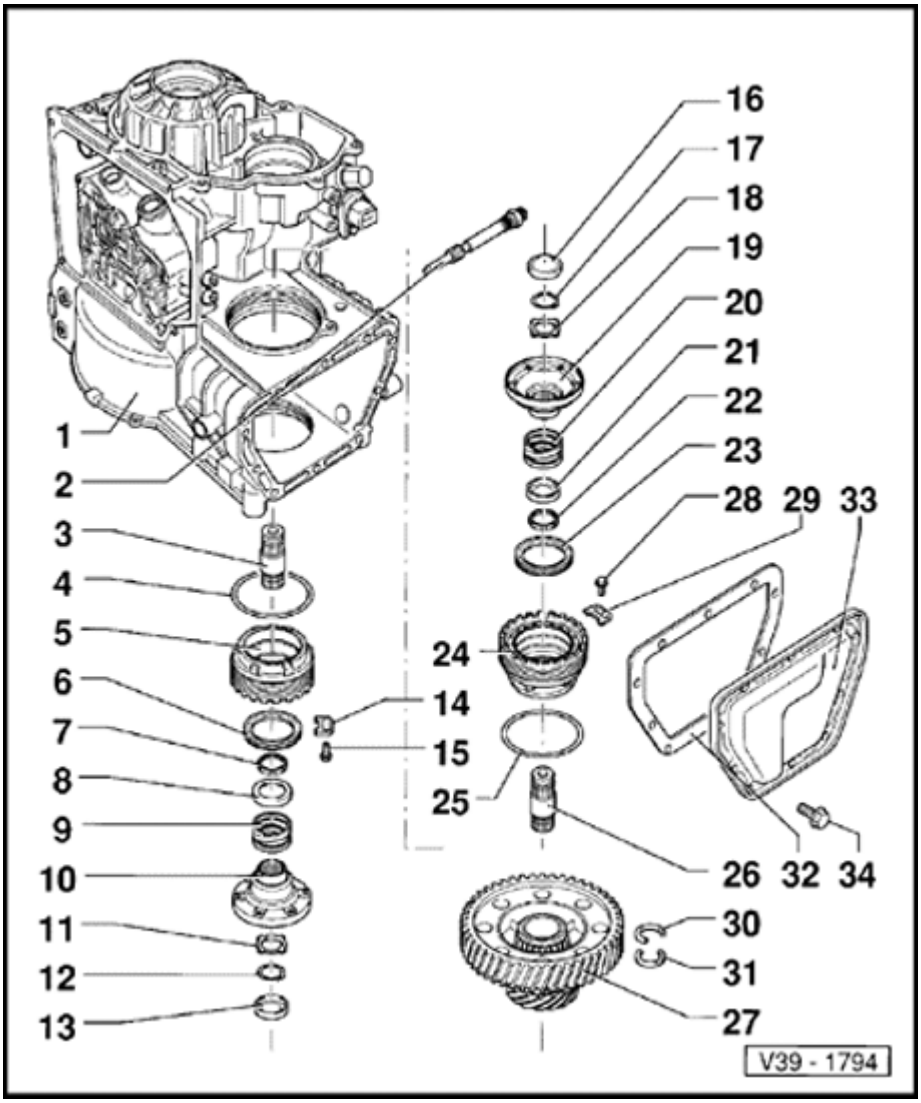

Differential, removing and installing

Note:

- *If tapered roller bearings are to be re-used, mark the adjusting ring ⇒ Fig. 2*
- *The drive pinion does not need to be removed for removing and installing the differential.*

1 - Transmission housing

2 - Speedometer drive

- With marking for oil level indication ⇒ Fig. 8

3 - Output shaft/drive flange

- Install thread facing drive flange
- Remove before taking out differential
- First adjust differential before installing

4 - O ring

- Always replace

39-23

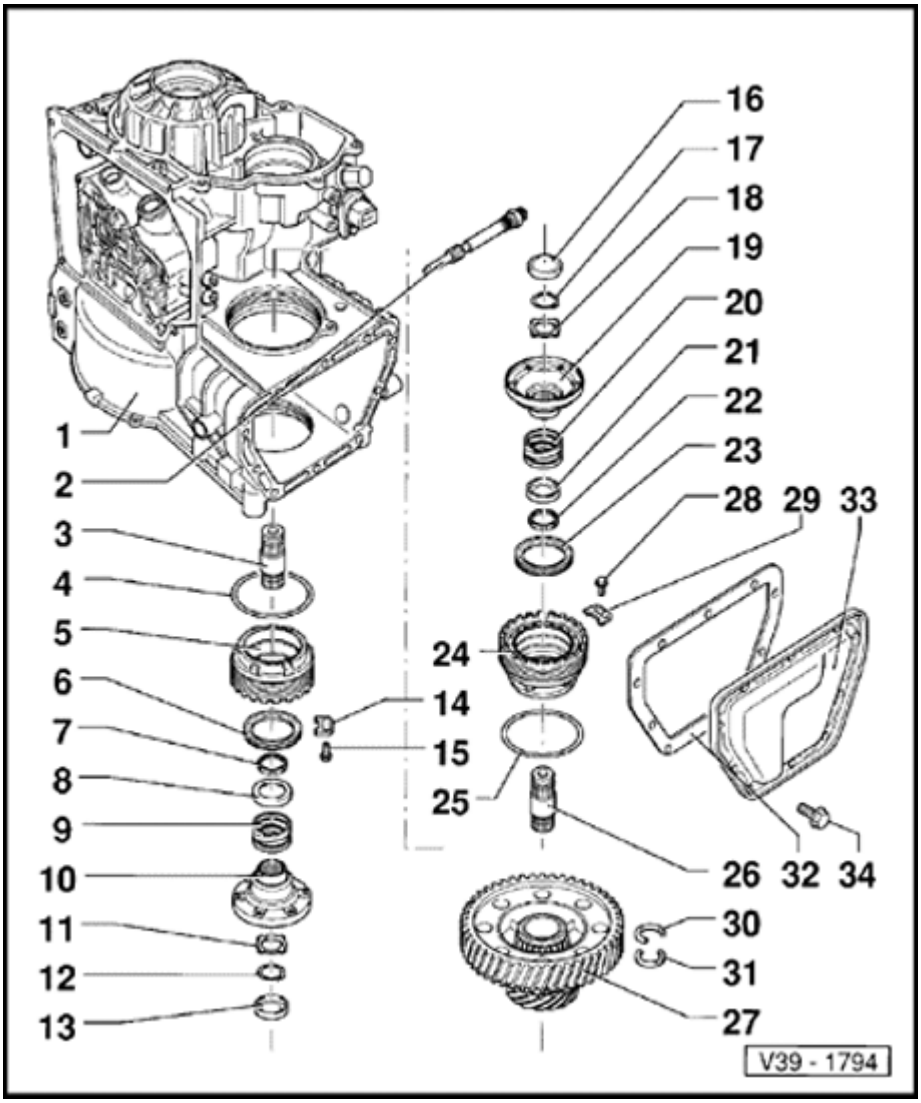

5 - Adjusting ring

- Removing ⇒ Fig. 3
- If used bearings are re-installed, mark installation position and line up bearings on marking again when installing ⇒ Fig. 2
- If new bearings are installed, pay attention to setting instructions, Adjusting differential, ⇒ Page 39-49

6 - Oil seal for drive flange

- Before installing, pack space between sealing lips with multi-purpose grease
- Can be replaced with transmission installed
- Remove with VW 681
- Driving in ⇒ Fig. 1

7 - Tapered ring

- Shoulder faces thrust washer

8 - Thrust washer

- Place over compression spring

9 - Compression spring

39-24

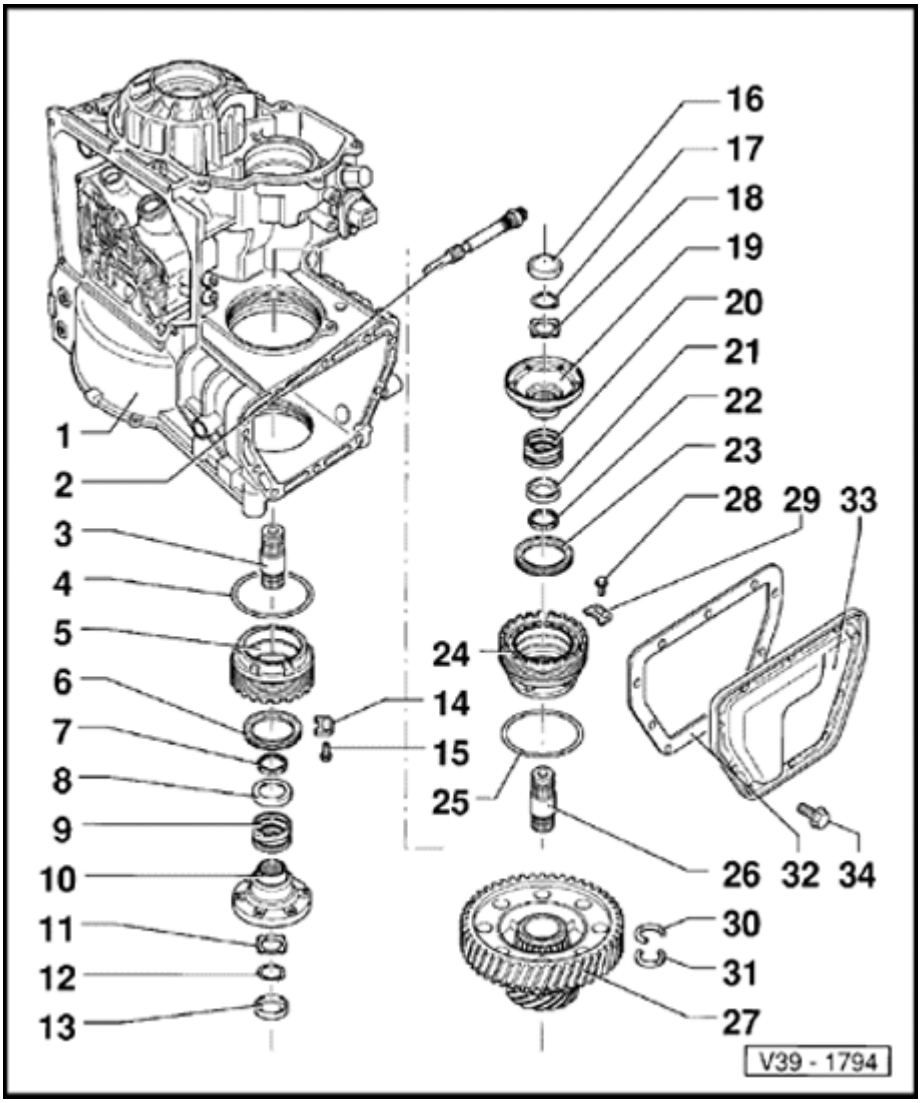

10 - Drive flange

- Install with tapered ring, thrust washer and compression spring
- Remove before taking out inner circlip on bevel gear
- Removing and installing ⇒ Fig. 4

11 - Dished washer

12 - Circlip

13 - Cover

14 - Locking element

15 - Screw, 12 Nm (9 ft lb)

16 - Cover

17 - Circlip

18 - Dished washer

39-25

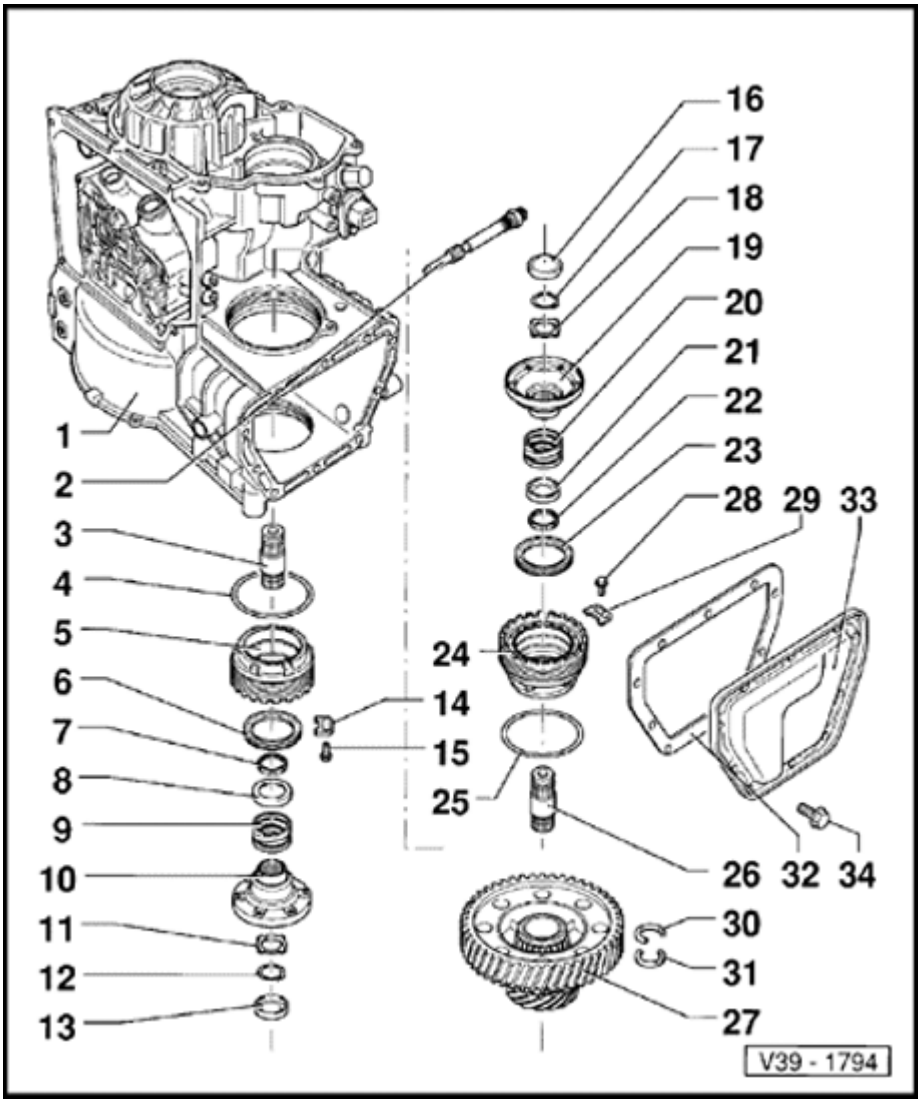

19 - Drive flange

- Install with tapered ring, thrust washer and compression spring
- Remove before taking out inner circlip on bevel gear
- Removing and installing ⇒ Fig. 4
- Removing and installing drive flange for tripodic drive shaft ⇒ Fig. 5

20 - Compression spring

21 - Thrust washer

- Place over compression spring

22 - Tapered ring

- Shoulder faces thrust washer

23 - Oil seal for drive flange

- Before installing, pack space between sealing lips with multi-purpose grease
- Can be replaced with transmission installed ⇒ Page 39-2
- Remove with VW 681
- Driving in ⇒ Fig. 1

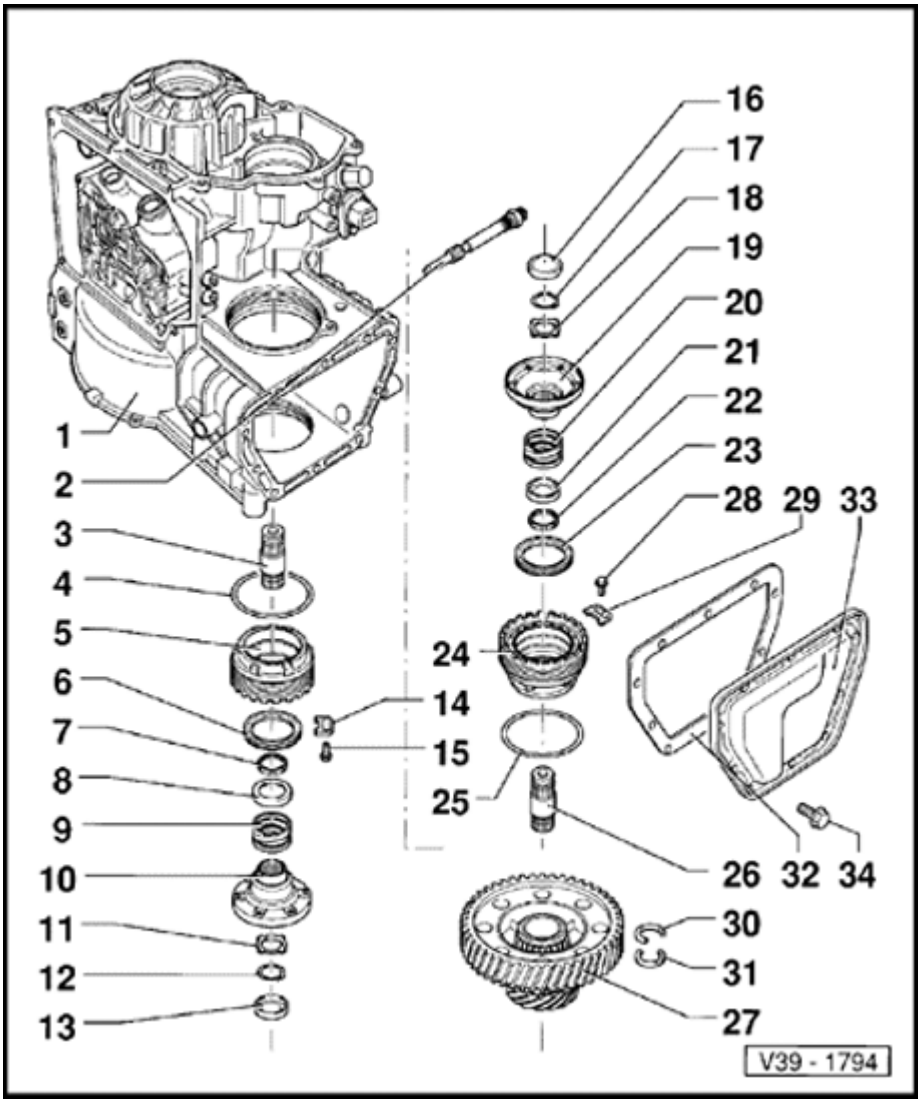

24 - Bearing body, 150 Nm (111 ft lb)

- When installing new bearing, pay attention to setting instructions, Adjusting differential, ⇒ Page 39-49
- Remove with 3155
- Installing ⇒ Fig. 6

25 - O-ring

- Always replace

26 - Output shaft/drive flange

- Install thread facing drive flange
- Before removing, take out differential
- First adjust differential before installing

27 - Differential

- Disassembling and assembling ⇒ Page 39-32
- Before removing differential, take out bearing body, adjusting ring and output shafts

28 - Screw, 12 Nm (9 ft lb)

29 - Locking element

39-27

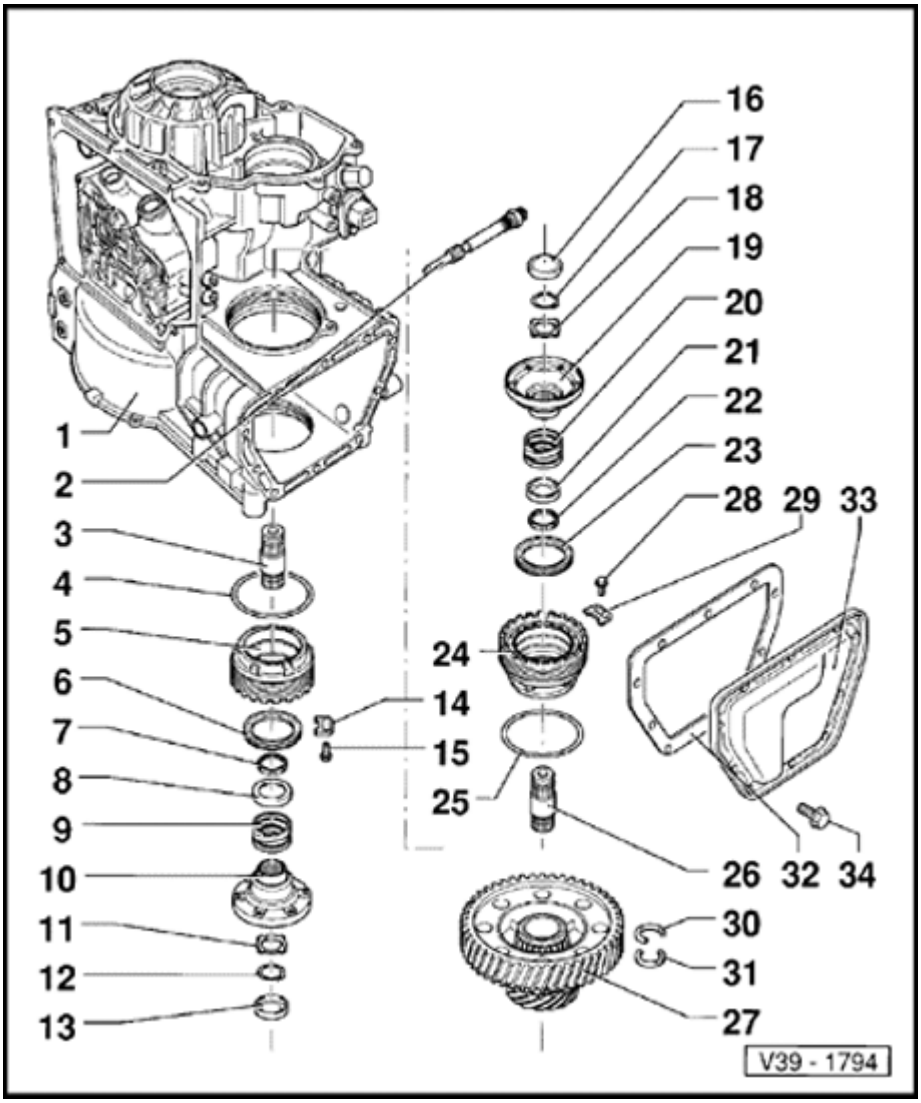

30 - Circlip

- First remove drive flange before removing circlip
- Removing and installing ⇒ Fig. 7

31 - Circlip

- First remove drive flange before removing circlip
- Removing and installing ⇒ Fig. 7

32 - Seal

- Always replace

33 - Cover

- For differential

34 - Screw, 28 Nm (21 ft lb)

- Install with thread locking fluid AMV 185 101 A1

Note:

After adjusting tapered roller bearings, secure bearing body and adjusting ring.

39-28

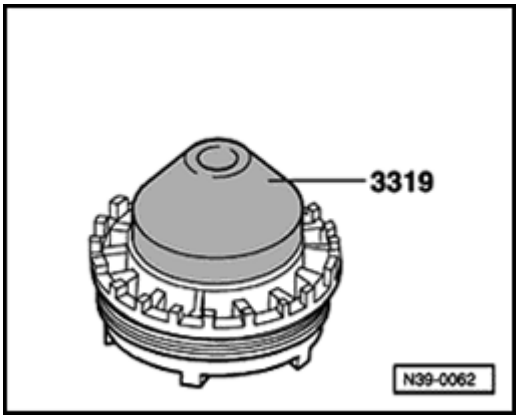

Fig. 1 Drive flange oil seal, driving in up to stop

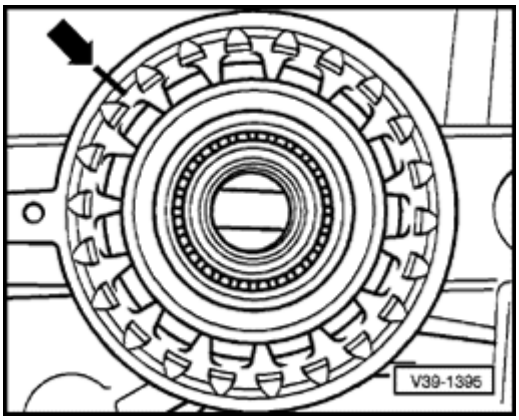

Fig. 2 Adjusting ring, marking

- If used bearings are re-installed, mark installation position (arrow) and line up on marking when installing.

39-29

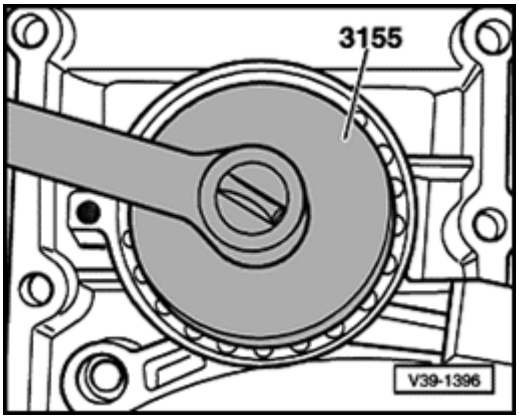

Fig. 3 Adjusting ring, removing

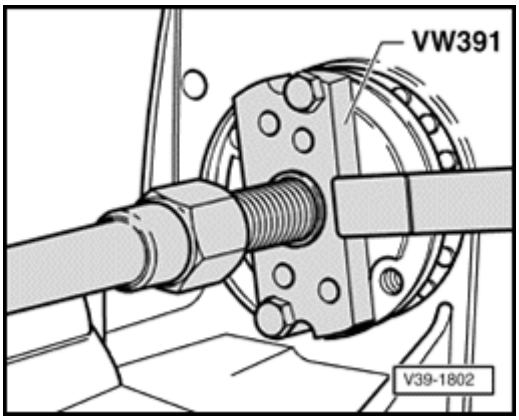

Fig. 4 Drive flange, removing and installing

Note:

Drive flange can also be removed with VW 391.

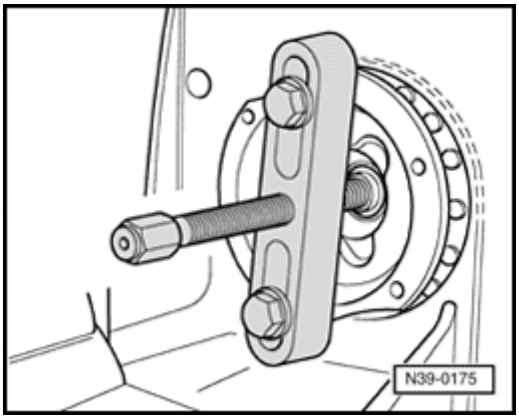

Fig. 5 Drive flange for tripodic drive shaft, removing and installing

- Bolt puller Kukko 18-0 using two 8x35 mm bolts and 8 mm diameter washers to flange to remove
- Install flange with 3109

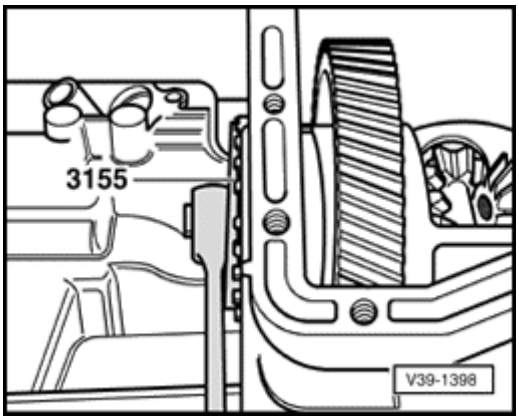

Fig. 6 Differential, installing

- Screw in bearing body up to stop and tighten to 150 Nm (111 ft lb).

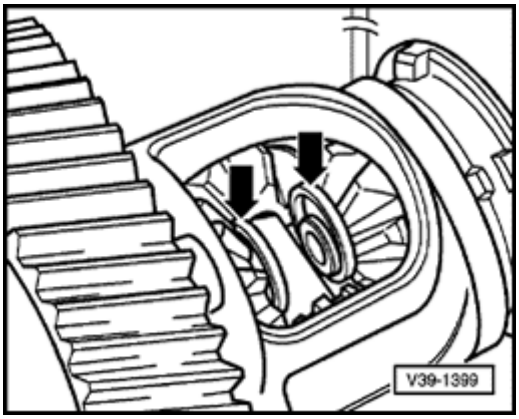

Fig. 7 Circlip (arrow), installing

- Remove circlip with two screwdrivers.

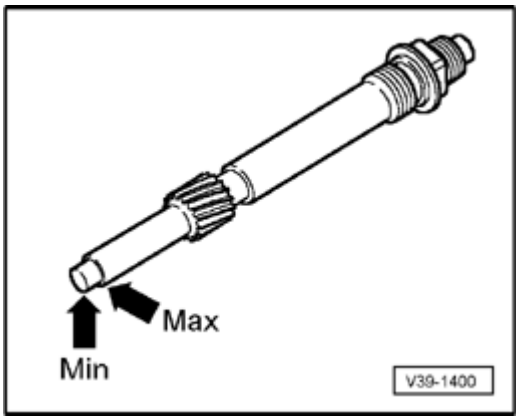

Fig. 8 Speedometer drive

- With transmission installed, check gear oil in final drive ⇒ Page 39-1 .

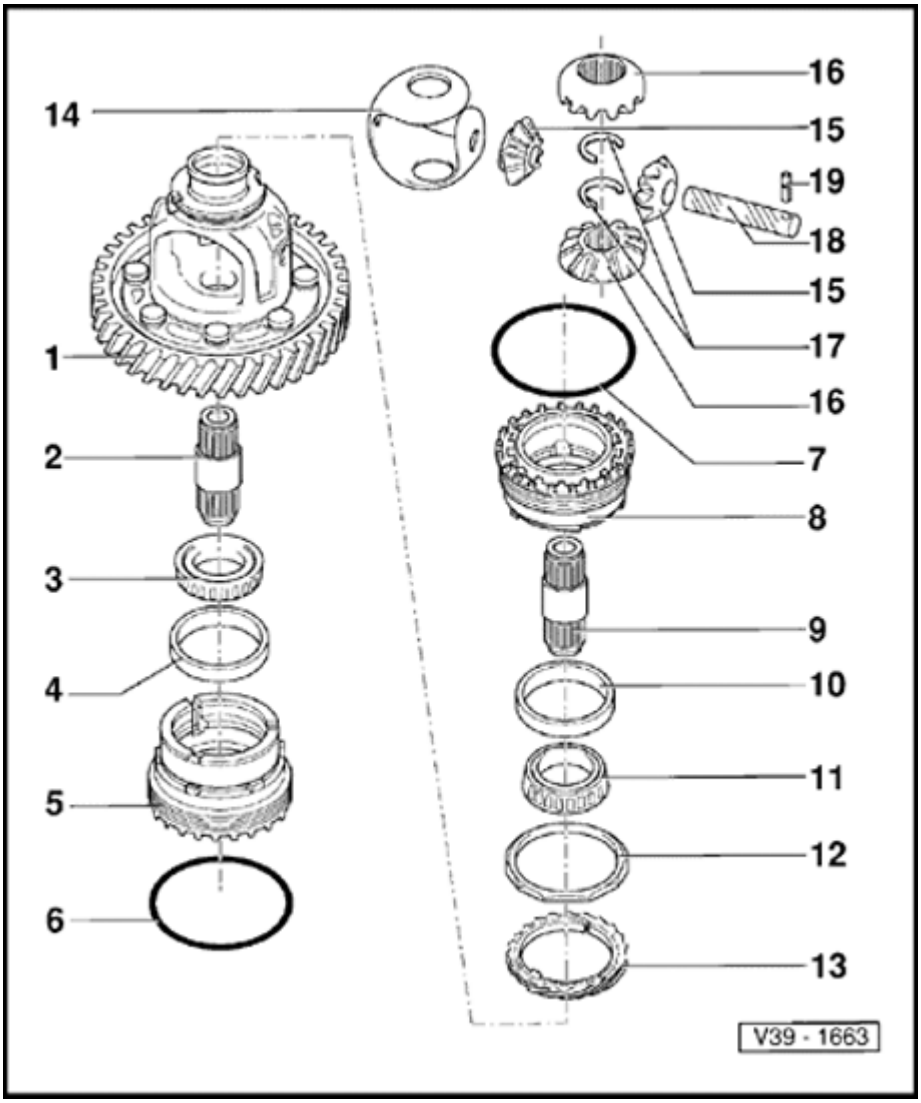

Differential, disassembling and assembling

Note:

- *Heat tapered roller bearing inner race to 100° C before pressing on.*
- *Heat adjusting ring for tapered roller bearing to 100° C before pressing in tapered roller bearing outer race.*

1 - Differential housing with riveted gear for final drive

- Final drive gear is riveted onto differential housing and then machined
- If the differential or final drive gear is damaged, replace the differential housing along with the riveted final drive gear
- Number of teeth on final drive gear ⇒ Page 00-6

39-33

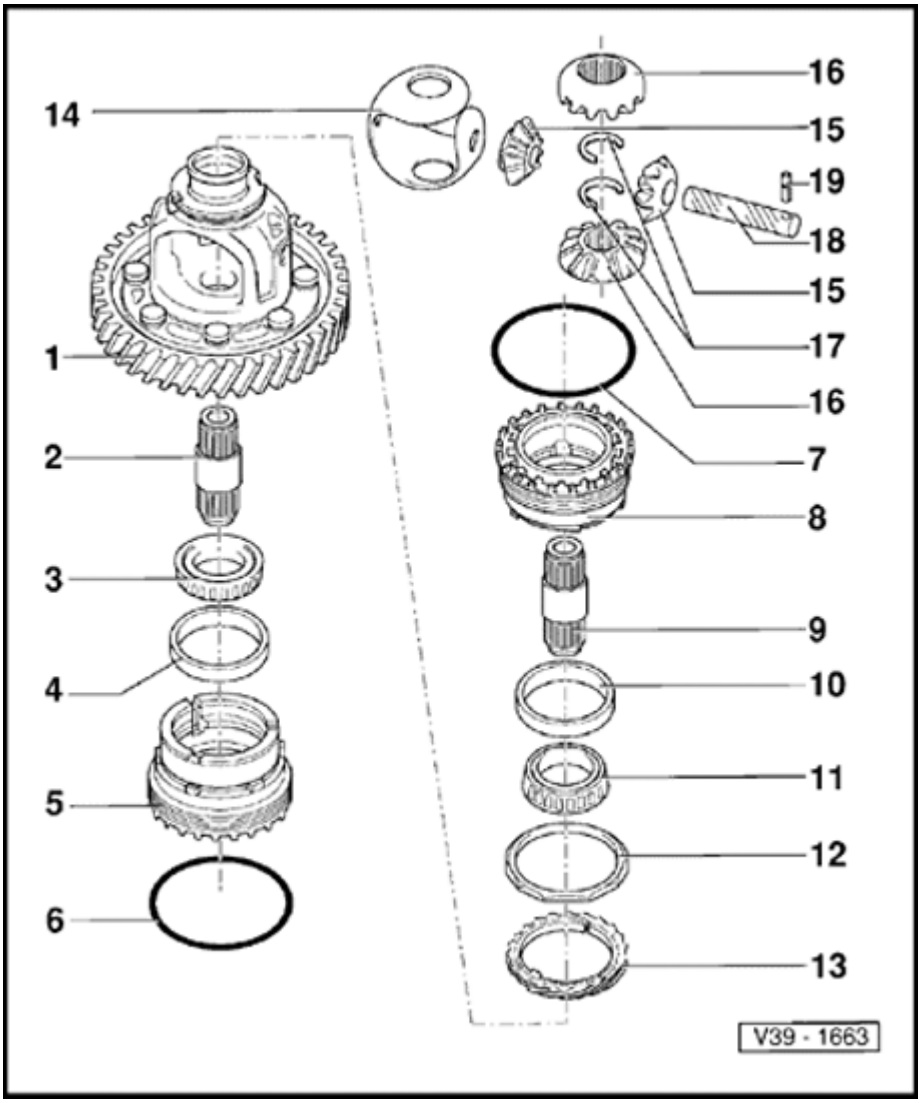

2 - Output shaft/drive flange

- Removing and installing

3 - Tapered roller bearing inner race

- Pulling off ⇒ Fig. 1
- Pressing on ⇒ Fig. 2

4 - Tapered roller bearing outer race

- Remove and install only when adjusting ring heated
- Drive out with a drift
- Pressing in ⇒ Fig. 4

5 - Bearing body for tapered roller bearing

- Removing and installing differential, ⇒ Page 39-22

6 - O-ring

- Always replace

7 - O-ring

- Always replace

8 - Adjusting ring for tapered roller bearing

- Removing and installing differential, ⇒ Page 39-22

39-34

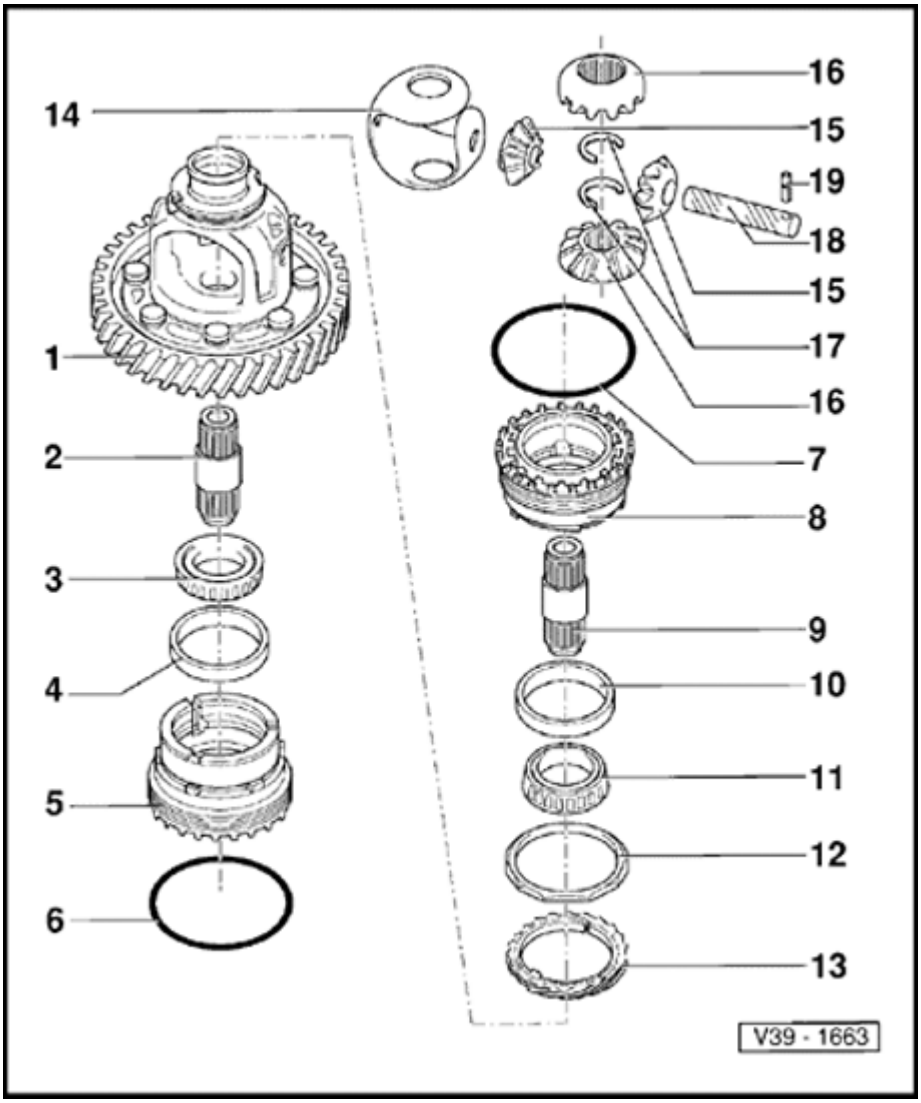

9 - Output shaft/drive flange

- Removing and installing
- Removing and installing differential, ⇒ Page 39-22

10 - Tapered roller bearing outer race

- Remove and install only when adjusting ring heated
- Drive out with a drift
- Pressing in ⇒ Fig. 4

11 - Tapered roller bearing inner race

- Pulling off ⇒ Fig. 1
- Pressing on ⇒ Fig. 2

12 - Speedometer drive bushing

- Drive off together with speedometer drive gear -item 13 -
- Drive on with drift

13 - Speedometer drive gear

- Drive out with a drift
- Install together with drive bushing -item 12 -

14 - One-piece thrust washer

- Place into differential housing before installing bevel gears

39-35

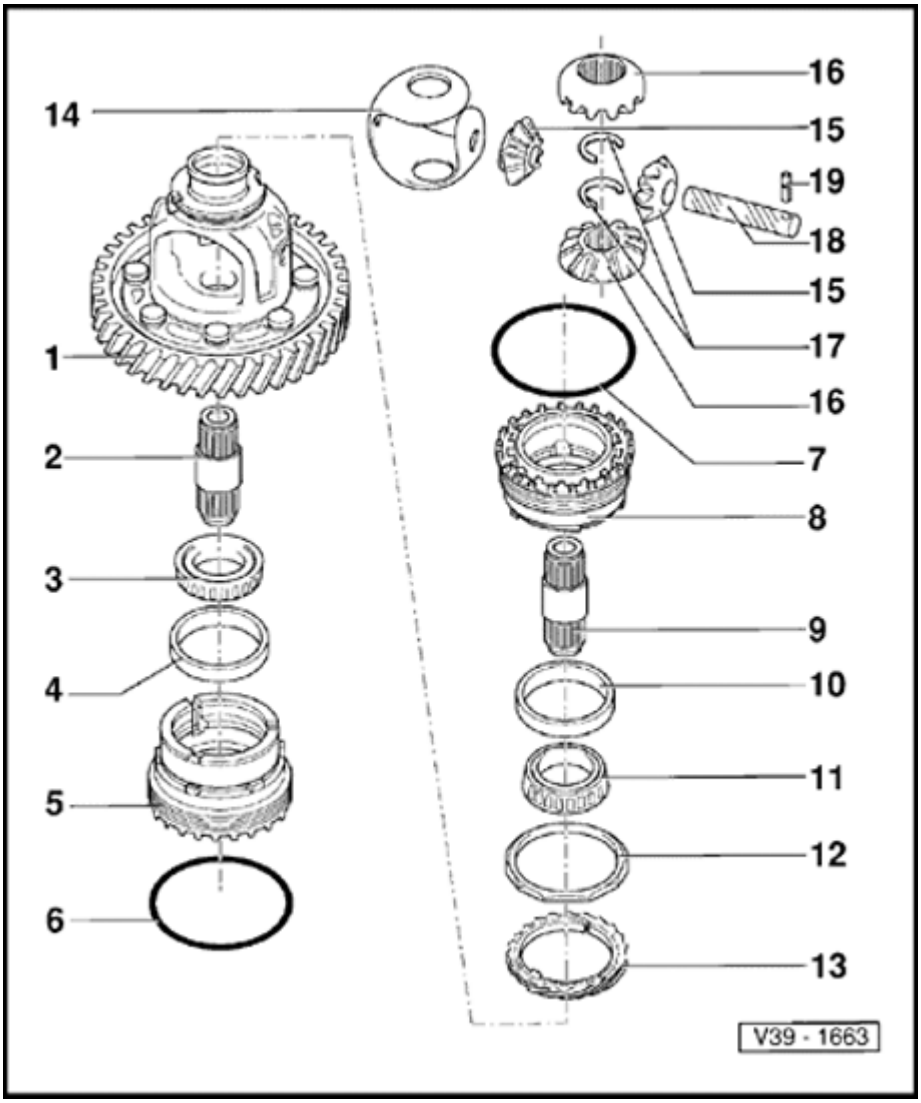

15 - Small bevel gears

- Installing ⇒ Fig. 3

16 - Large bevel gears

- Installing ⇒ Fig. 3

17 - Circlip

CAUTION!

Do not remove circlip until after removing drive flange as compression spring is pre-tensioned.

18 - Shaft for bevel gears

- Drive out with a drift
- When driving in, do not damage one-piece thrust washer

19 - Spring pin

- For securing shaft for bevel gears

IMG SRC="../icons

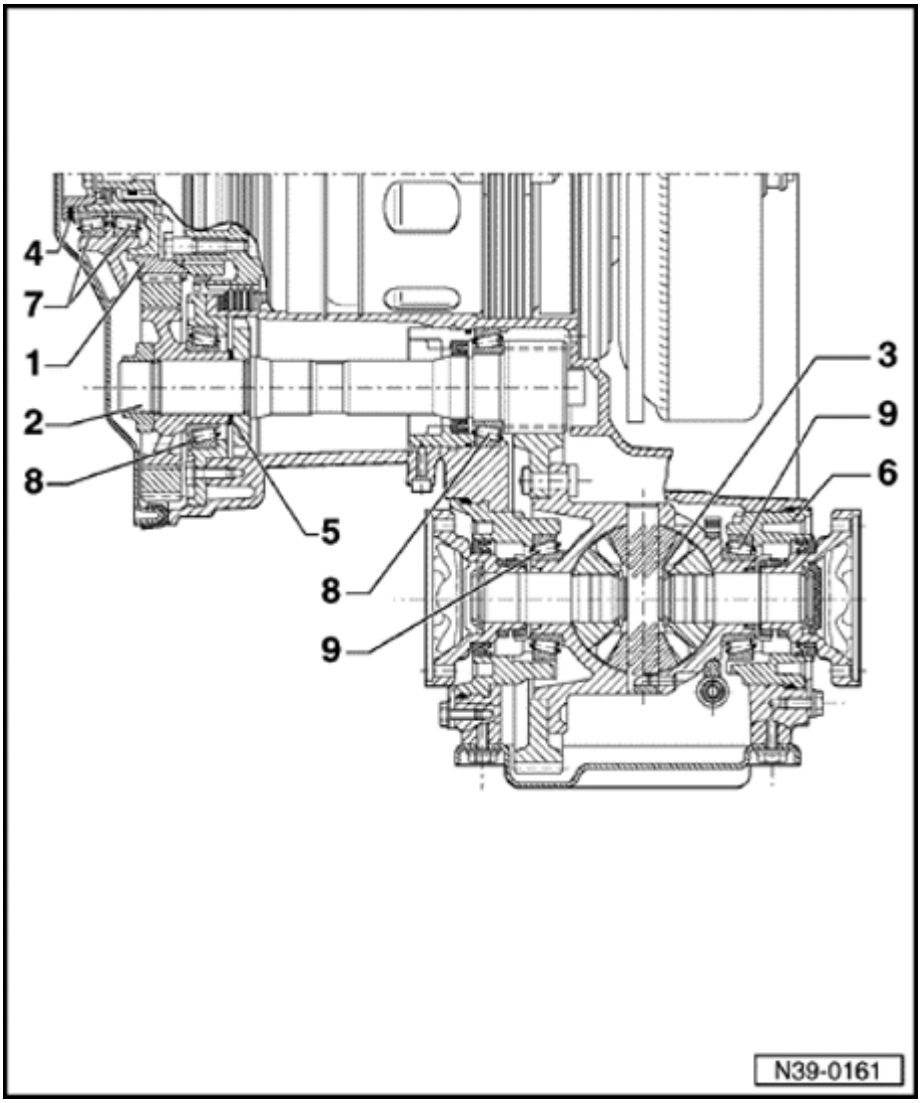

Final drive, adjusting

Adjustment overview

1 - Input gear

- Adjusting ⇒ Page 39-46

2 - Drive pinion

- Adjusting ⇒ Page 39-42

3 - Differential

- Adjusting ⇒ Page 39-49

4 - Shim for input gear

- Determine thickness from table ⇒ Page 39-44
- Determine part number from parts catalog

5 - Shim for drive pinion

- Determine thickness from table ⇒ Page 39-44
- Determine part number from parts catalog

39-40

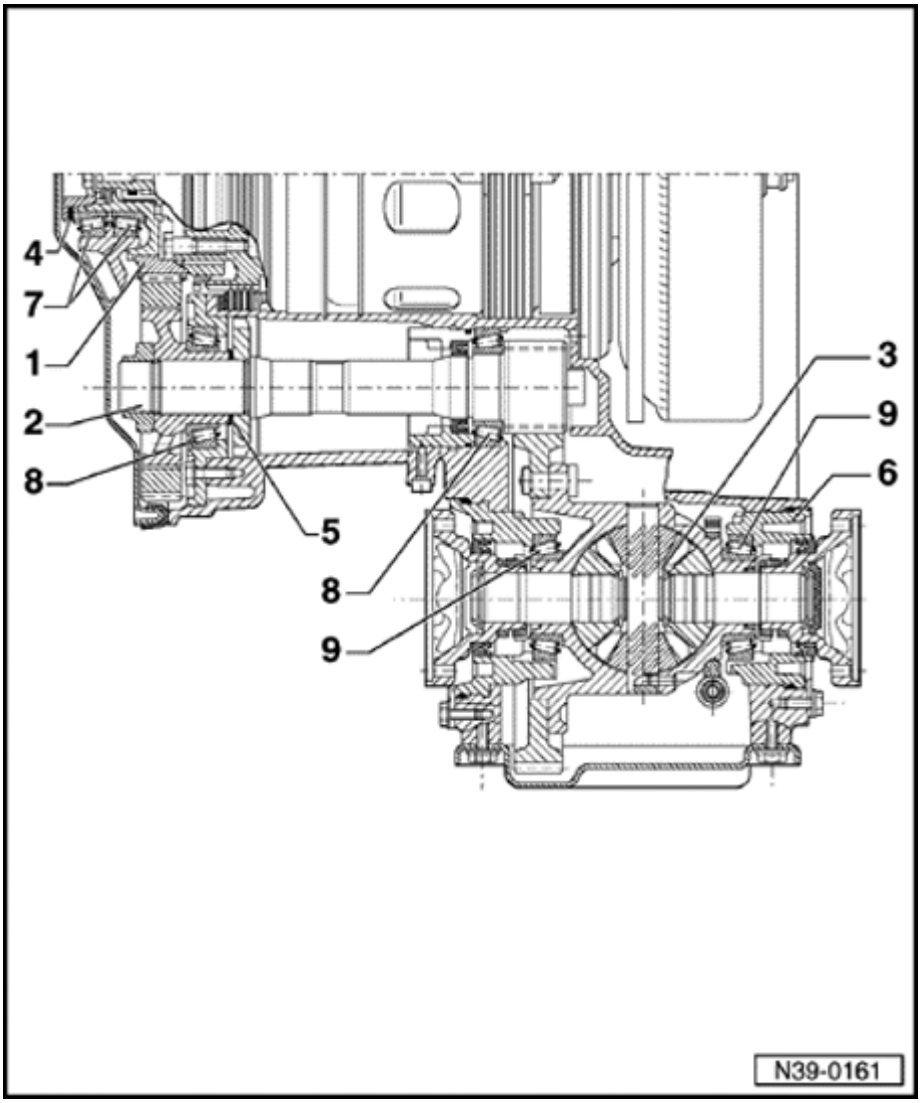

6 - Shim for differential

7 - Tapered roller bearings for input gear

- Always replace together
- Measure friction torque via pinion shaft. Friction torque of new tapered roller bearings must be 180 - 220 Ncm (16 - 20 in. lb) greater than friction torque of pinion shaft

8 - Tapered roller bearings for drive pinion

- Always replace together
- Re-determine shim when replacing tapered roller bearings

9 - Tapered roller bearings for differential

- Always replace together
- Measure friction torque via drive pinion. Friction torque of new tapered roller bearings must be 60 - 80 Ncm (5 - 7 in. lb) greater than friction torque of drive pinion

Volkswagen Passat

Official Factory Repair Manual

1995, 1996, 1997
Gasoline, Turbo Diesel, TDI
4-cylinder and VR6, including wagon

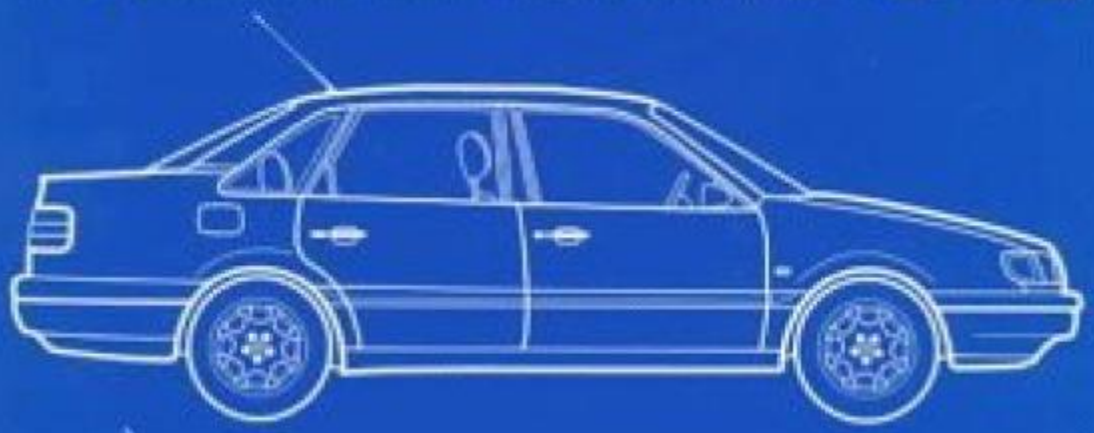

Robert Bentley

PASSAT '95 - '97

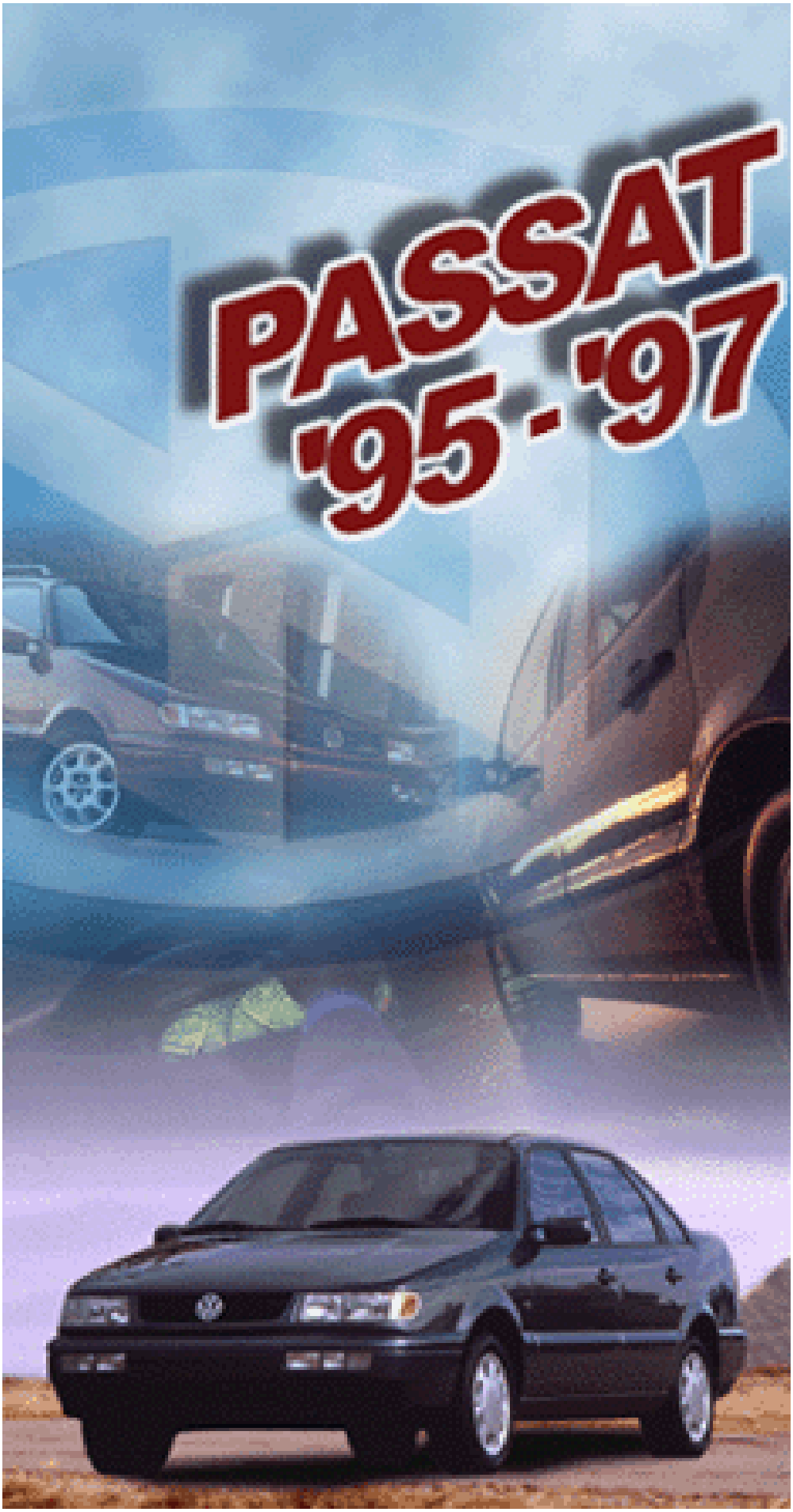

4 Spd. Automatic Transmission 096

00 - General, Technical data

Transmission identification

Code letters, model/engine applications, ratios, equipment

Capacities

Repair instructions

01 - On Board Diagnostic (OBD)

On Board Diagnostic (OBD), general information
Technical data
On Board Diagnostic (OBD) program - Guide
Electronic component locations

On Board Diagnostic (OBD) program
VAG 1551 Scan Tool (ST), connecting and selecting functions
List of selectable functions
Diagnostic Trouble Code (DTC) Memory, checking
Diagnostic Trouble Code (DTC) table
Diagnostic Trouble Code (DTC) Memory, erasing
Basic setting, initiating
Reading measured value block

Transmission electrical testing
Electrical testing on Transmission Control Module (TCM) with 38-pin connector
Test table
Electrical testing on Transmission Control Module (TCM) with 68-pin connector
Test table

32 - Torque converter

Torque converter
Torque converter, identifying
Torque converter, draining
Torque converter oil seal, removing and installing

37 - Automatic Transmission - Controls, Housing

Shift mechanism, servicing

Shift mechanism, checking
Selector lever cable, checking and adjusting
Ignition lock, checking
Shift mechanism, disassembling and assembling
Selector lever, disassembling and assembling
Locking cable, removing and installing
Locking cable, adjusting

Transmission, checking
Shift points, checking
Stall speed, checking
Main pressure, checking

Transmission, removing and installing

ATF level
ATF level, checking
ATF, topping up

Gear selector elements

Transmission, disassembling and assembling
ATF cooler and ATF filler tube, removing and installing
Planetary gearbox disassembly and assembly, overview
I - ATF pump to support tube, removing and installing
II - Reverse gear clutch -K2- to large sun gear, removing and installing
III - Free wheel and reverse gear brake -B1-, removing and installing
IV - Planet carrier and input gear, removing and installing
Planetary gearbox, disassembling and assembling
Planetary gearbox adjustments, overview
Planet carrier, adjusting
Reverse gear brake -B1-, adjusting
Clutch play between -K1- and -K2-, adjusting
2nd and 4th gear brake -B2-, adjusting

38 - Automatic Transmission - Gears, Hydraulic controls

ATF pump, disassembling and assembling

Free wheel with -B1- piston, disassembling and assembling

1st to 3rd gear clutch -K1- with turbine shaft, disassembling and assembling

Reverse gear clutch -K2-, disassembling and assembling

4th gear clutch -K3- with pump shaft, disassembling and assembling

Valve body, removing and installing
Valve body conductor strip with transmission fluid temperature sensor, removing and installing

Parking lock, disassembling and assembling

39 - Final drive, Differential

Oil in final drive, checking

Drive flange oil seal, removing and installing

Final drive, disassembling and assembling
Repair overview
Input gear, removing and installing
Drive pinion, removing and installing
Differential, removing and installing
Differential, disassembling and assembling

Final drive, adjusting
Adjustment overview
Adjustments to be completed after replacing individual components
Drive pinion, adjusting
Input gear, adjusting
Differential, adjusting

Transmission identification

The 4-speed automatic transmission 096 is installed in the Passat beginning in the 1995 model year.

It may be installed in combination with either a 4-cylinder or a 6-cylinder engine. Applications ⇒ page 00-3 .

The transmission is identified by type (096), code letters and date of manufacture.

Location on transmission

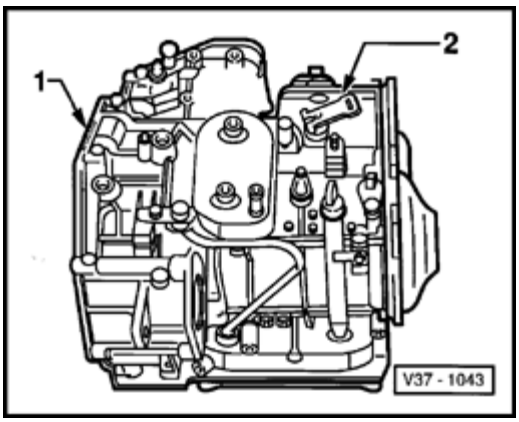

- Code letters (arrow -1-)

  Automatic transmission 096 (-arrow 2-)

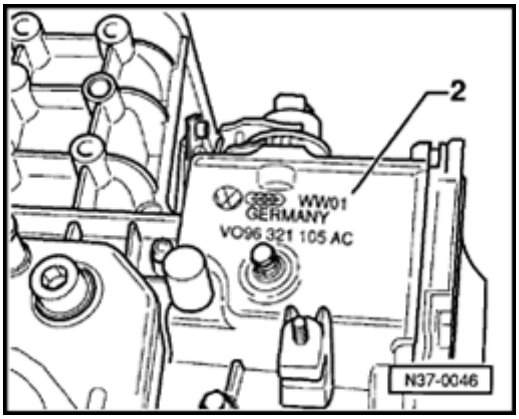

- Automatic transmission 096 (-2-)

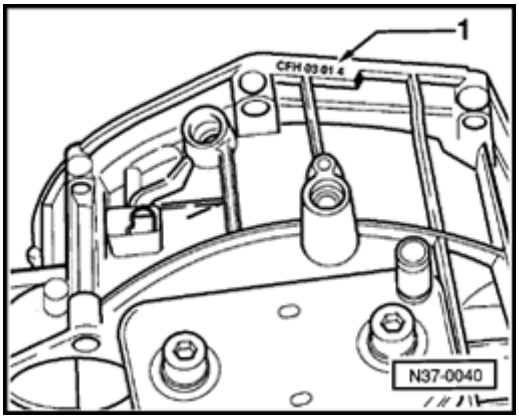

Transmission code letters and date of manufacture (arrow -1-)

Example:	CFF	03	01	4
	I	I	I	I
	I	I	I	I
	Transmission code letters	Day	Month	Year
		Date (e.g. 3 Jan.,1994)		

The code letters of the transmission are also listed on the vehicle data plates.

Code letters, model/engine applications, ratios, equipment

Automatic transmission		**096**					
Transmission	Code letters	**CFF**		**CNK**			
	Manufactured from: to:	01.93		08.93			
Torque converter	Code letters	**CCR**		**ACA**			
Valve body	Code letters	**BA**		**BA**			
	Manufactured from: to:	10.93		10.93			
Number of plates		Inner	Outer	Inner	Outer	Inner	Outer
	Clutch -K1-	5	5	5	5		
	Clutch -K2-	5	5	5	5		
	Clutch -K3-	6	5	5	4		
	Brake -B1-	5	5	5	5		
	Brake -B2-	6	7	6	7		
Application	Model	Passat 1995 ➤		Passat 1995 ➤			
	Engine	2.8 liter - 128 kW (172 hp)		2.0 ltr. - 85 kW (115 hp)			

Transmission	Code letters		CFF	CNK	
Ratios	1st gear		2.714 :1	2.714 :1	
	2nd gear		1.441 :1	1.441 :1	
	3rd gear		1.000 :1	1.000 :1	
	4th gear		0.743 :1	0.743 :1	
	Reverse gear		2.884 :1	2.884 :1	
Intermediate drive	No. of teeth	Input gear	62	62	
		Output gear	61	61	
	Ratio		0.984	0.984	
Final drive	No. of teeth	Drive pinion	20	18	
		Final drive gear	74	76	
	Ratio		3.700 :1	4.222 :1	
Drive shaft	Flange diameter - mm		100	star-shape	
ATF cooler	Equipment		Pressure-side 6-row	Pressure-side 6-row	

Capacities

Planetary gearbox

Capacities	Planetary gearbox	Automatic transmission
Initial filling	5.6 liters (5.9 US qt.)	096
Oil change	approx. 3.0 liters (3.2 US qt.)	
Lubricant	ATF Dexron	

Final drive

Capacities	Final drive	Automatic transmission
Initial filling	0.75 liter (0.79 US qt.)	096
Oil change	Filled for life No change	
Lubricant	Gear oil SAE75 W90 (synthetic oil)	

Note:

Gear oil SAE 75 W90 (synthetic oil) is available as follows:

- *0.5 liter container - Part No. G 052 145 A1*
- *1.0 liter container - Part No. G 052 145 A2*

Repair instructions

The maximum possible care and cleanliness and proper tools are essential to ensure satisfactory and successful transmission repairs. The usual basic safety precautions also naturally apply when carrying out vehicle repairs.

A number of generally applicable instructions for individual repair operations, which are otherwise mentioned at various points in the Repair Manual, are summarized here. They apply to this Repair Manual.

Transmission

When an automatic transmission is replaced, the ATF in the planetary transmission (⇒ page 37-43) and the gear oil in the final drive (⇒ page 39-1) is to be checked and topped up as necessary. ATF and oil capacities and specifications ⇒ page 00-5 .

- *When installing the transmission, make sure that the dowel sleeves for engine/transmission alignment are installed correctly.*

Gaskets, oil seals

- *Always install new O-rings.*

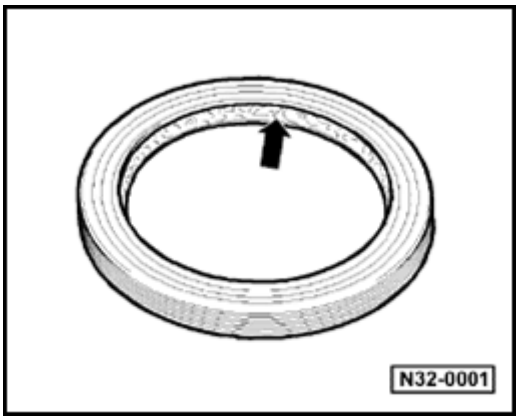

- *Radial shaft seals: Pack space between sealing lips (arrow) with grease before installing.*
- *After installing, check gear oil level or ATF level and adjust to correct level if necessary.*

Locking elements

- *Do not overstretch circlips replace if necessary.*
- *Circlips must be properly seated in the grooves.*

Nuts, bolts

- *Nuts and bolts for attaching covers and housings must be loosened and tightened evenly, in an alternating pattern.*
- *Do not distort particularly sensitive parts, e.g. valve body, and loosen or tighten diagonally in stages.*
- *Tightening torques listed apply to unoiled nuts and bolts.*
- *Threads of bolts that are secured by locking fluid are to be cleaned with a wire brush. Then insert bolts with AMV 185 100 A1.*
- *Always replace self-locking nuts.*

Bearings

- *Install needle bearings with the inscribed side (thicker sheet metal) facing the drift.*
- *Lubricate all bearings in transmission with gear oil before installing. Oil with special care for measuring friction torque.*
- *Heat the inner races of tapered roller bearings to approx. 100° C (212° F) before installing.*
- *Do not interchange the inner or outer races between bearings of the same size.*

- *When tapered roller bearings are mounted on a shaft, always replace them together and use bearings from the same manufacturer.*

Shims

- *Measure shims at several points with a micrometer. Different tolerances in shims of the same nominal size make it possible to obtain the exact shim thickness required.*

- *Check for signs of burrs and damage. Only install shims that are in perfect condition.*

Inner plates

- *Place new inner plates in ATF fluid for 15 minutes before installing.*

Valve body

- *Replace the valve body if any of the selector elements is scorched.*

Clutches

- *Clutches 1, 2 and 3 should initially be dismantled only for cleaning. If parts are malfunctioning, replace clutch.*

- *Clutch applications are determined by the transmission code letters.*

On Board Diagnostic (OBD) program

- *Before carrying out any automatic transmission repairs, first determine the cause of the malfunction as precisely as possible with the aid of the On Board Diagnostic capability of the Transmission Control Module ⇒ Repair Group 01.*

On Board Diagnostic (OBD), general information

Function

The 096 automatic transmission is controlled electro-hydraulically. "On Board Diagnostic" capability refers specifically to the electrical and electronic controls.

The Transmission Control Module (TCM) -J217- receives input signals from components that effect gear selection, and sends output signals to solenoid valves that control gear selection in the valve body.

The TCM -J217- is equipped with Diagnostic Trouble Code (DTC) Memory so that, in the event of an electrical/electronic component malfunction or an open circuit, the cause of the malfunction can be determined quickly.

Malfunctions in the monitored sensors or components are stored in DTC Memory along with an indication of the type of malfunction

Malfunctions that occur only occasionally are defined as "sporadic" malfunctions and are coded as such.

The Transmission Control Module (TCM) -J217- analyzes the information and distinguishes different types of malfunctions. Those that do not reoccur within 5 to 20 km (3 to 12 miles) or 6 to 24 minutes are stored as sporadic malfunctions.

Electrical malfunctions that affect vehicle performance can be identified using the VAG 1551 Scan Tool (ST). The On Board Diagnostic (OBD) capabilities can only be fully exploited using operating mode 1 ("Rapid data transfer").

Functions of the VAG 1551 Scan Tool (ST) ⇒ List of selectable functions, page 01-24 .

Safety functions of the Transmission Control Module (TCM)

If critical malfunctions occur while driving, the transmission will continue to operate in an emergency running mode. If a malfunction occurs while the selector lever is in position "D," "3" or "2," the 3rd gear emergency running mode is activated.

If a malfunction occurs while the selector lever is in position "1," "P," "N" or "R" the emergency running mode for that stage is activated.

If the engine is started again in the emergency running mode and the malfunction occurs when the selector lever is in position "D", "3" or "2" then 3rd gear is activated hydraulically, until the malfunction is repaired.

If there are malfunctions that result in emergency running, the transmission remains in the emergency running mode until the ignition is switched off.

Malfunctions that may activate emergency running mode:

Open circuit in wiring, short-circuit, malfunctions in electrical or hydraulic components.

Transmission Control Module (TCM) recognition of malfunctions

If a malfunction exists for a certain time, it is stored as a static malfunction. A malfunction that is recognized but does not occur again within a certain time or distance is stored as a "sporadic malfunction."

Malfunctions that are stored in DTC Memory as sporadic malfunctions will be displayed as such when retrieved by the VAG 1551 Scan Tool (ST). In such cases, the letters "SP" appear on the right side of the Scan Tool display. If the printer is switched on, "sporadic DTC" is printed out after the malfunction is addressed.

Malfunctions that are stored in DTC Memory as sporadic malfunctions are automatically erased after 1,000 km (600 miles) or 20 hours.

Technical data

Memory	
♦ Permanent memory ♦ Volatile memory	yes no
Data output	
♦ Rapid data transfer ♦ Blink-code output	yes no
Output Diagnostic Test Mode (DTM)	no
Basic setting	yes
Transmission Control Module (TCM) coding	no
Reading measured value block ((VAG 1551 function 08)	yes
Component locations	⇒ page 01-7

01-5

On Board Diagnostic (OBD) program - Guide

Troubleshooting Automatic Transmission with VAG 1551 Scan Tool (ST)

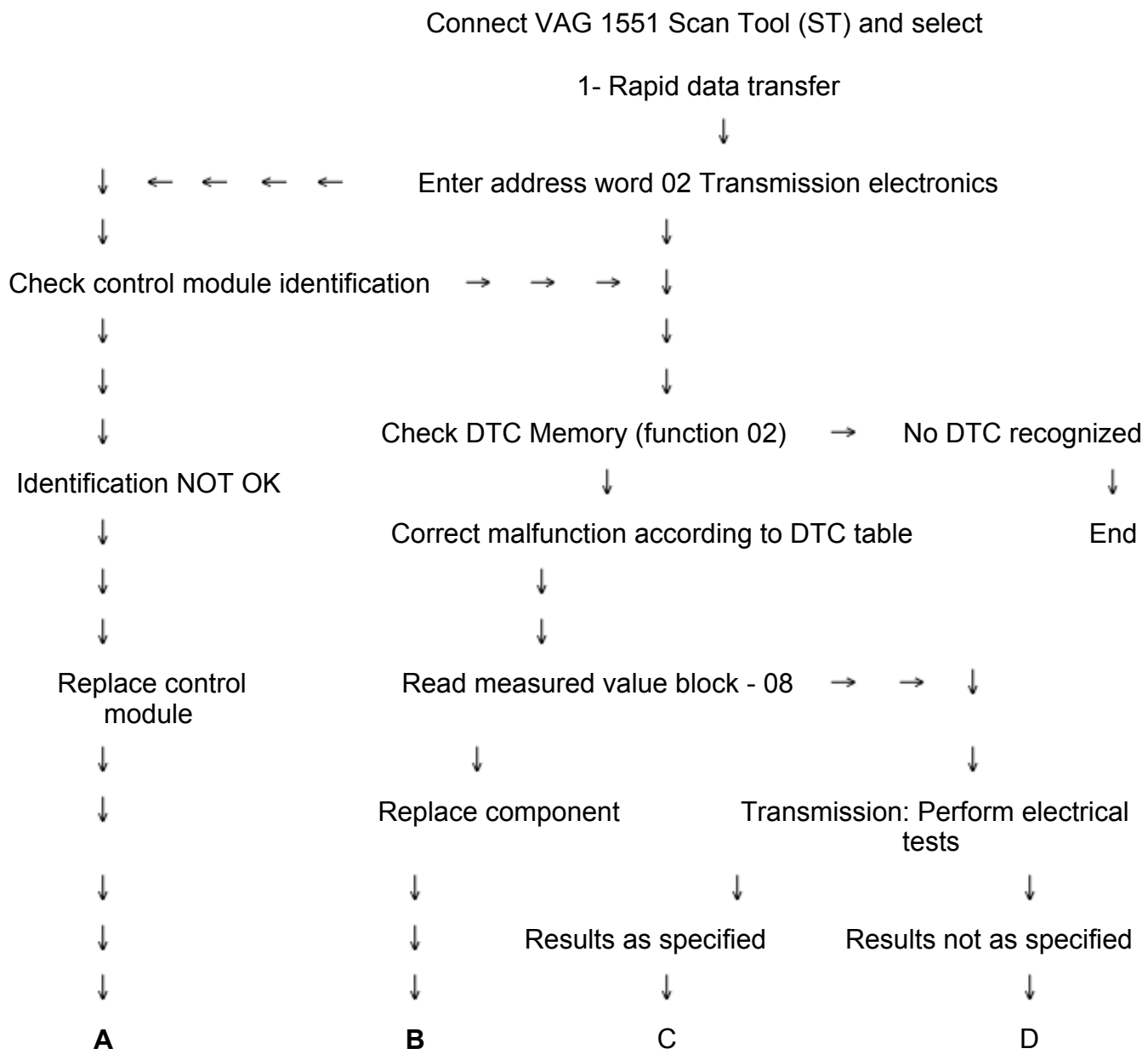

01-6

A B **C** D

↓ ↓ ↓ ↓

↓ ↓ ↓ Check wiring according to wiring diagrams →
Electrical Wiring Diagrams, Troubleshooting and Component Locations binder

↓ ↓ ↓

↓ ↓ ↓

↓ ↓ ↓ ↓

→ → → → → Check DTC Memory (function 02) ← Replace component
and
Erase DTC Memory (function 05)

↓

↓

Initiate basic setting (function 04)

↓

↓

Carry out road test
and

Check DTC Memory again (function 02)

↓

↓

If No DTC recognized! is indicated on display

the On Board Diagnostic program has been completed

01-7

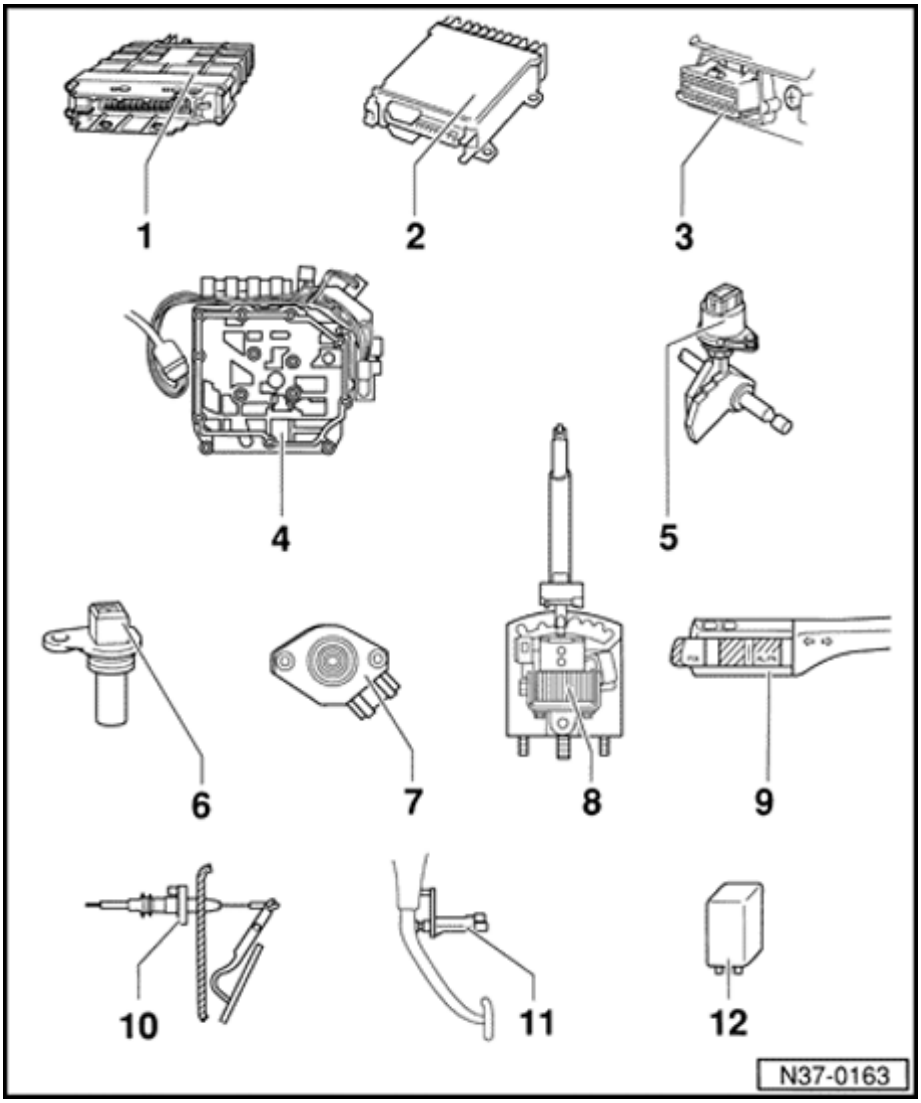

Electronic component locations

Note:

If the Engine Control Module (ECM) or Transmission Control Module (TCM) -J217- is replaced, the system must be brought to basic setting ⇒ Basic setting, initiating, page 01-39 .

1 - Transmission Control Module (TCM) - 217-

- Location, removing and installing ⇒ Fig. 1
- Removing (with 68-pin connector) ⇒ Fig. 2
- Installing (with 68-pin connector) ⇒ Fig. 3
- Checked by On Board Diagnostic (OBD) program ⇒ VAG 1551 Scan Tool (ST), connecting and selecting functions, page 01-20

2 - Engine Control Module (ECM)

- Location ⇒ Fig. 13
- Removing and installing:

⇒ Repair Manual, Fuel Injection & Ignition, Repair Group 24

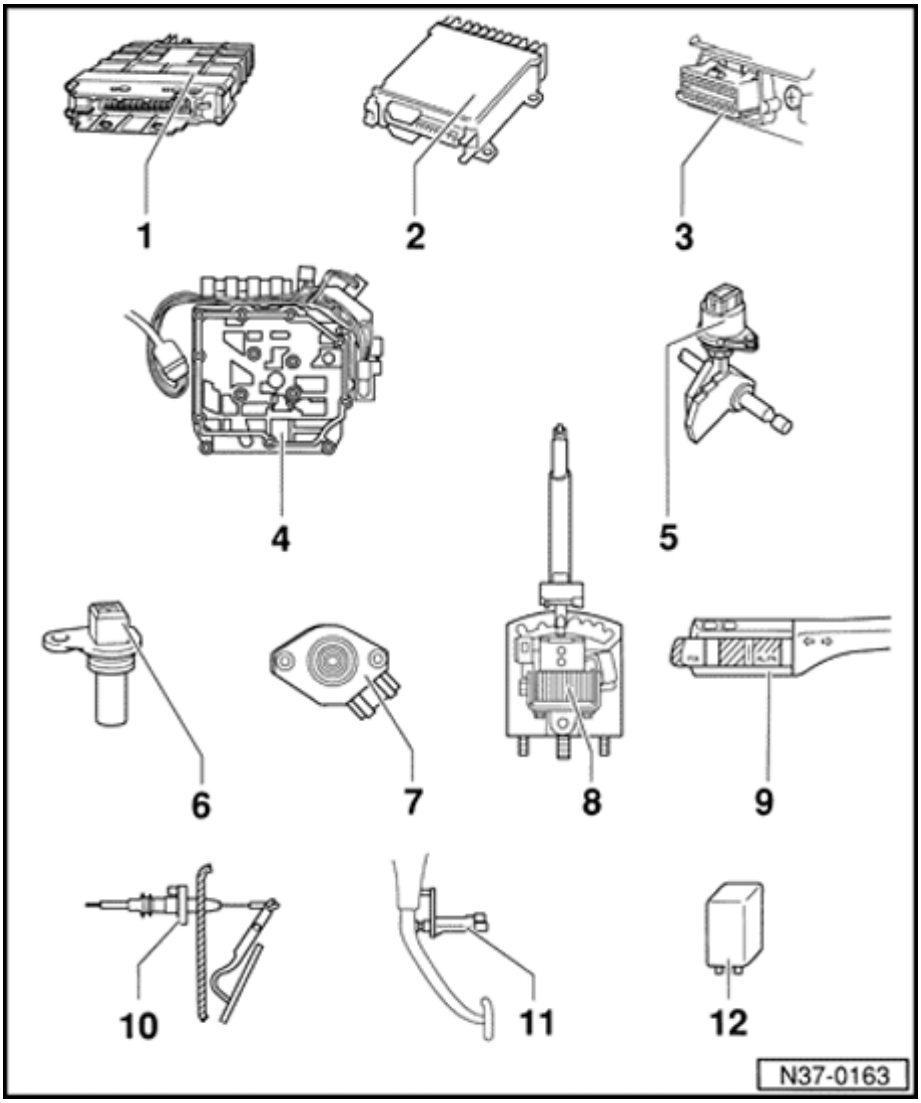

3 - Data Link Connector (DLC)

- Location: right-hand side of instrument cluster ⇒ page 01-20

4 - Valve body

- Location ⇒ Fig. 4
- Removing/installing ⇒ page 38-22
- The Solenoid Valves -N88-, -N89-, -N90-, -N91-, -N92-, -N93-, -N94- and the Transmission Fluid Temperature Sensor -G93- are attached to the valve body
- Components checked by On Board Diagnostic (OBD) program

01-9

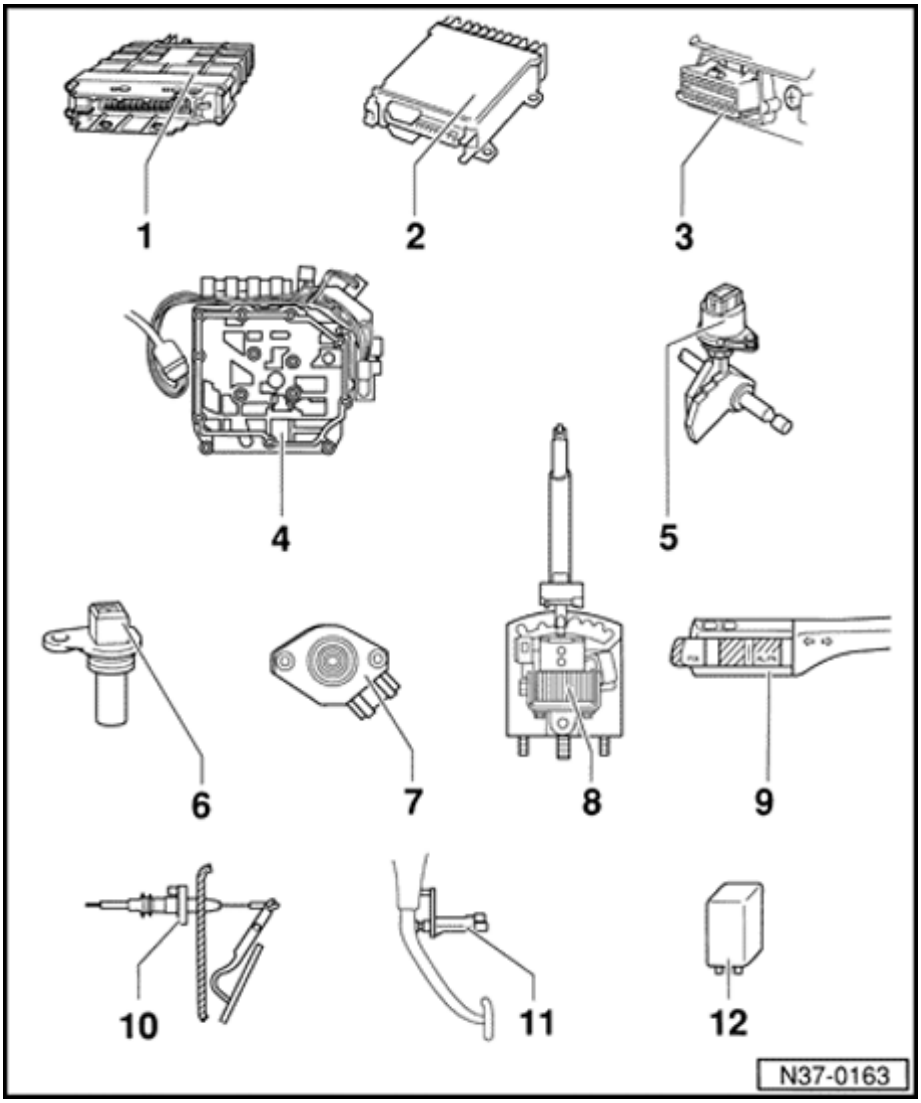

5 - Multi-Function Transmission Range (TR) Switch -F125-

- Location, removing and installing ⇒ Fig. 5
- Checked by On Board Diagnostic (OBD) program

6 - Vehicle Speed Sensor (VSS) -G68-

- Location, removing and installing ⇒ Fig. 6
- Checked by On Board Diagnostic (OBD) program

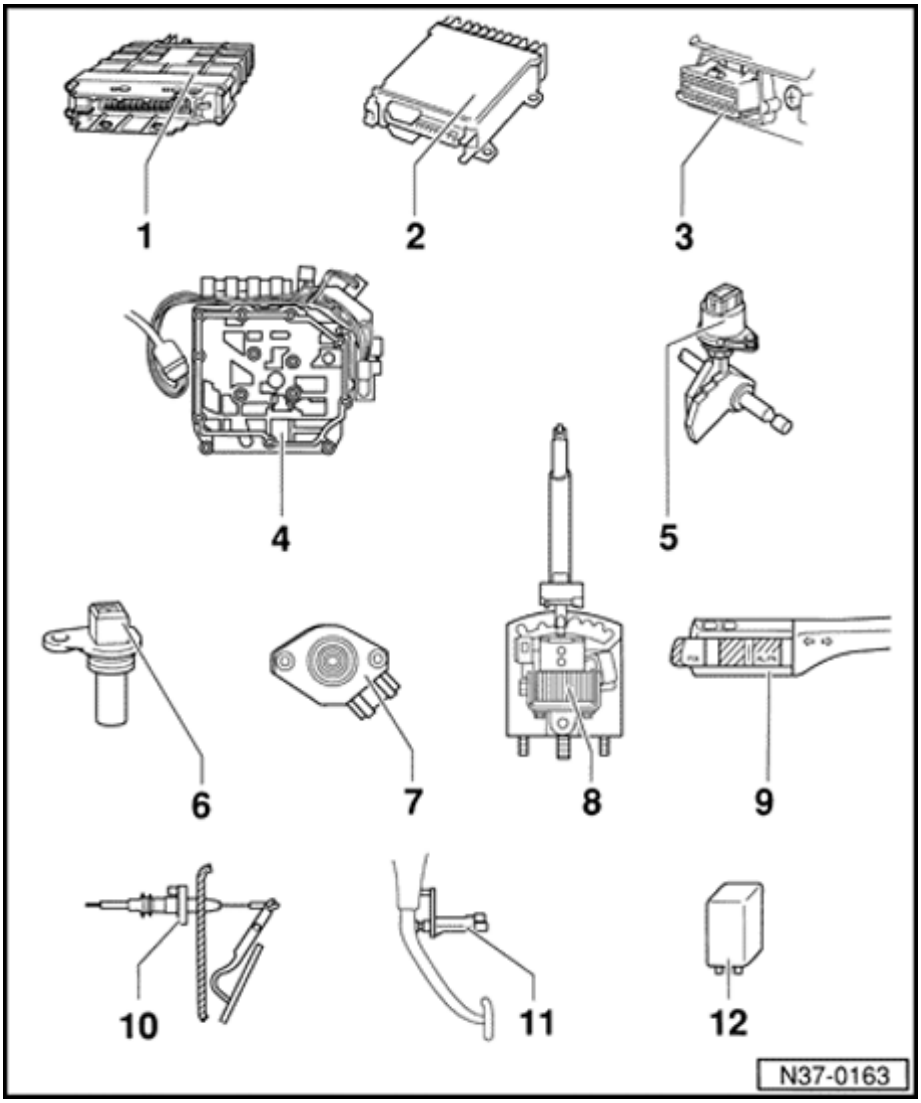

7 - Throttle Position (TP) Sensor -G69-

- Location ⇒ Fig. 7
- Removing and installing:

⇒ *Repair Manual, Fuel Injection & Ignition, Repair Group 24*

- Various types according to engine version
- Signal checked by On Board Diagnostic (OBD) program
- Vehicles from 01.93 with 2.8 liter 6-cylinder engine:TP Sensor signal is directed to Transmission Control Module (TCM) via Engine Control Module (ECM);Signal can only be checked by reading measured value block ⇒ page 01-40 ; If a malfunction is indicated then also carry out On Board Diagnostic (OBD) checks of Engine Control Module (ECM)

⇒ *Repair Group 01 for relevant engine code*

- After repairs initiate basic settings ⇒ Basic setting, initiating, page 01-39

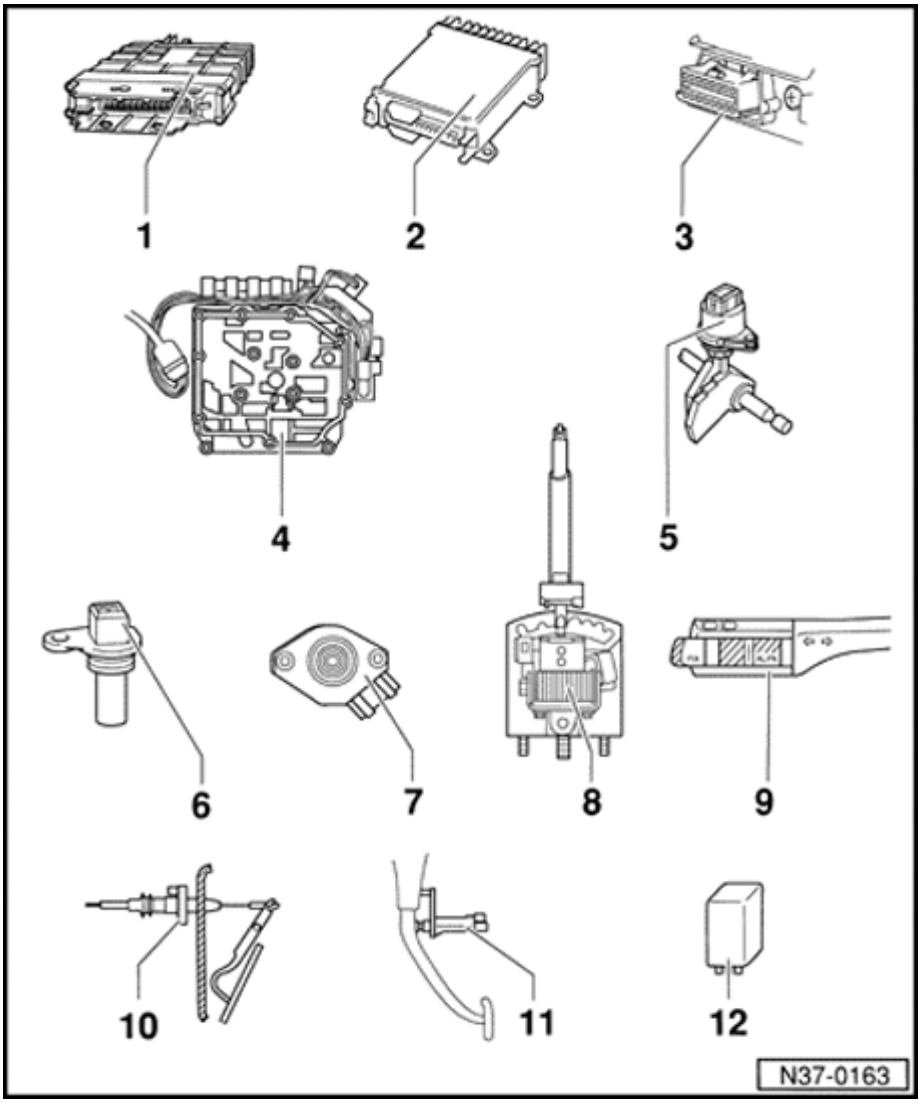

8 - Shiftlock Solenoid - N110-

- Location ⇒ Fig. 8
- Removing and installing ⇒ page 37-1
- Can be checked electrically ⇒ page 01-59 and by reading measured value block ⇒ page 01-40

9 - Cruise Control Switch - E45-

- Location ⇒ Fig. 9
- Removing and installing:

⇒ *Repair Manual, Electrical Equipment, Repair Group 94*

- Can be checked by reading measured value block ⇒ page 01-40

10 - Kick Down Switch -F8-

- Location ⇒ Fig. 10
- Removing and installing: remove and install Accelerator Pedal cable, then adjust afterward
- Accelerator Pedal cable, adjusting:

⇒ *Repair Manual, General, Engine, Repair Group 20*

- Can be checked electrically ⇒ page 01-59 and via reading measured value block ⇒ page 01-40

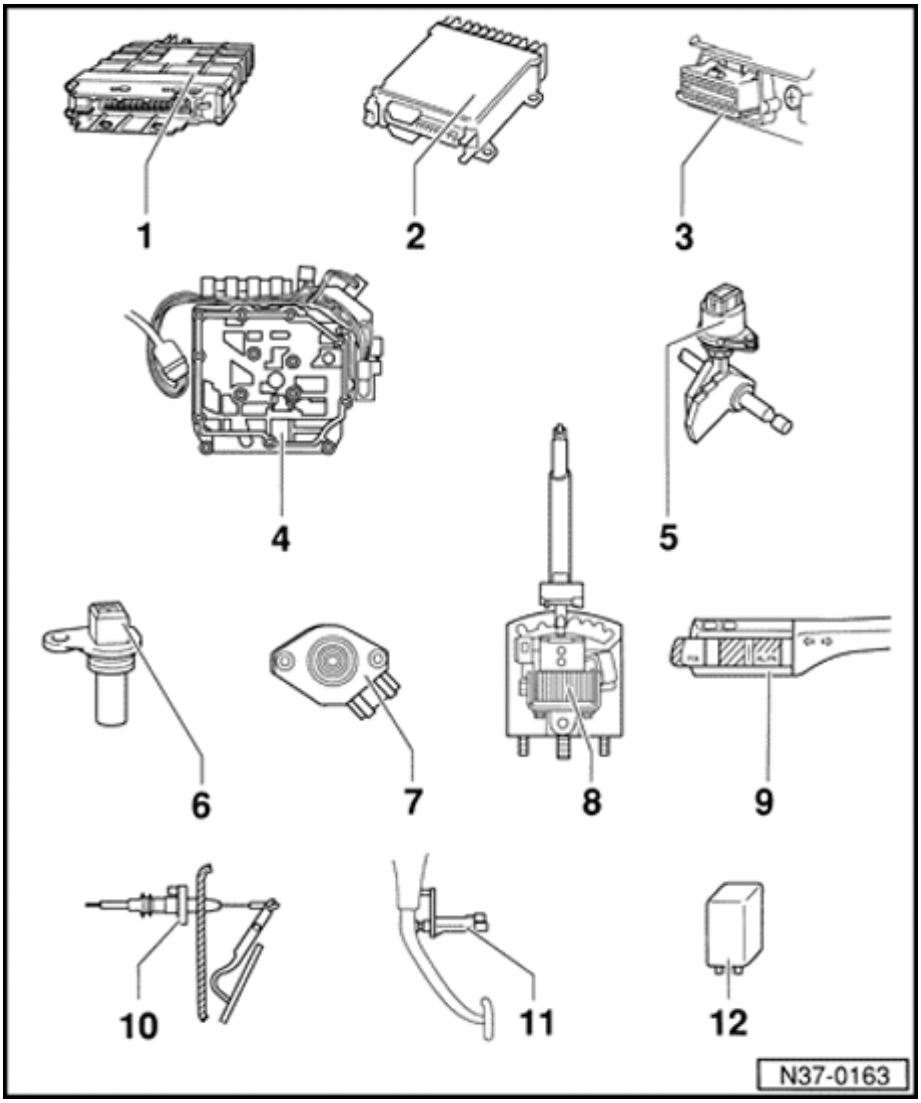

11 - Brake Light Switch -F-

- Location ⇒ Fig. 11
- Removing and installing

⇒ *Repair Manual, Suspension, Wheels, Brakes, Steering, Repair Group 47*

- Can be checked electrically ⇒ page 01-59 and via reading measured value block ⇒ page 01-40

12 - Park/Neutral Position (PNP) Relay - 226-

- Location ⇒ Fig. 12

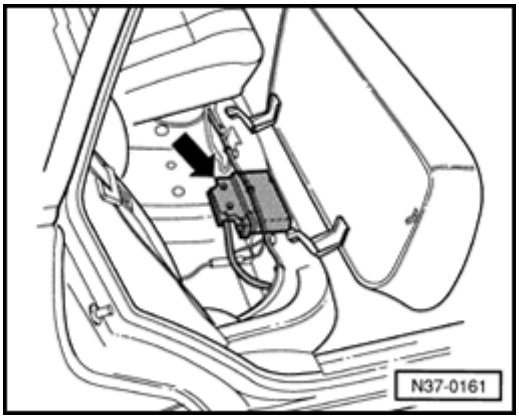

Fig. 1 Transmission Control Module (TCM) - 217-

Location: From 01.93 the Transmission Control Module (TCM) is located under the rear seat.

Transmission Control Module - 217- (TCM), removing and installing

(TCM with 38-pin connector)

- Fold up rear seat.
- Release multi-pin connector lock by pressing off clip, then disconnect multi-pin connector.
- Remove TCM.
- Install in reverse order of removal.

01-14

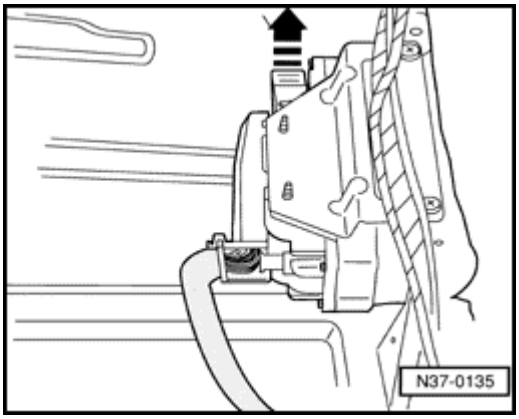

Fig. 2 Transmission Control Module - 217- (TCM) with 68-pin connector, removing

- Release multi-pin connector lock, then disconnect multi-pin connector.
- Remove TCM.

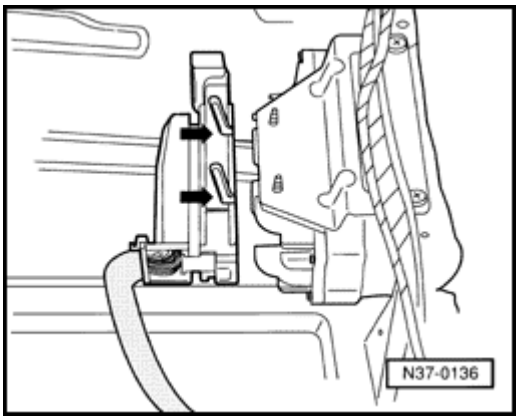

Fig. 3 Transmission Control Module - 217- (TCM) with 68-pin connector, installing

- Place multi-pin connector in position on control module locating pins (arrows), then lock multi-pin connector.

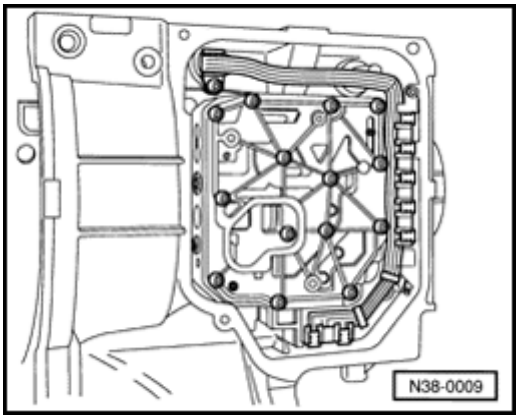

Fig. 4 Valve body

Location: The valve body is located inside the transmission, mounted above the ATF oil pan.

Solenoid Valves -N88-, -N89-, -N90-, -N91-, -N92-, -N93-, -N94- and Transmission Fluid Temperature Sensor -G93- are attached to the valve body.

Removing and installing valve body

⇒ page 38-22

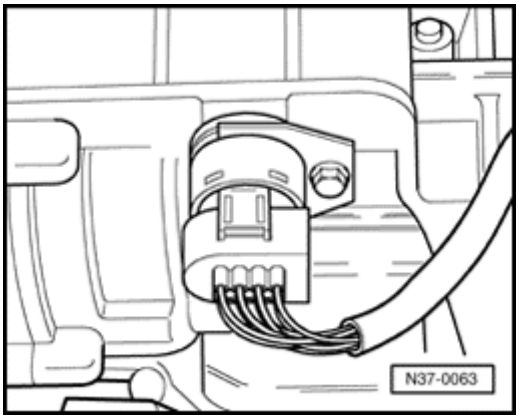

Fig. 5 Multi-function Transmission Range (TR) Switch -F125-

Location: The Multi-function Transmission Range (TR) Switch is located on rear of the transmission.

Removing and installing Multi-function TR Switch

- Disconnect harness connector from Multi-function Transmission Range (TR) Switch.
- Remove bolt and retainer, then remove switch.
- Replace seal.
- Install in reverse order of removal.
  - Retainer bolt tightening torque: 10 Nm (7 ft lb)

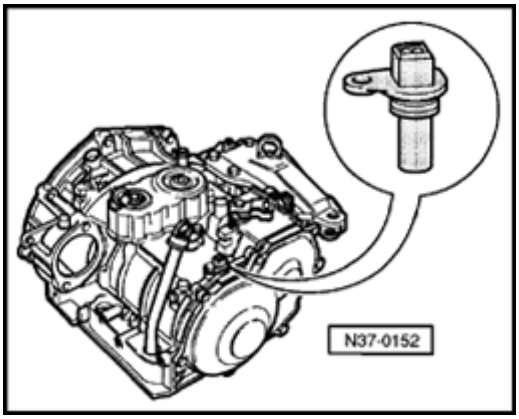

Fig. 6 Vehicle Speed Sensor (VSS) -G68-

Location: The Vehicle Speed Sensor (VSS) is located on top of the transmission.

Removing and installing Vehicle Speed Sensor

- Disconnect harness connector from sensor.
- Remove retaining bolt and pull out sensor.
- Install in reverse order of removal.
  - ♦ Retainer bolt tightening torque: 10 Nm (7 ft lb)

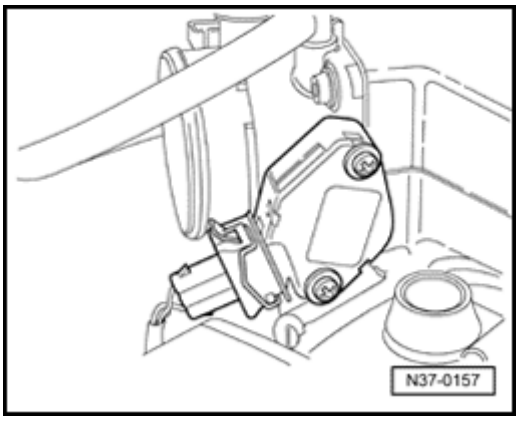

Fig. 7 Throttle Position (TP) Sensor -G69-

Location: The Throttle Position (TP) Sensor is located on the throttle valve housing (engine). Component design may vary depending on the engine application.

Removing and installing Throttle Position (TP) Sensor

Removal and installation are described in the appropriate fuel injection and ignition booklet. Check engine code.

⇒ *Repair Manual, Fuel Injection & Ignition, Repair Group 24*

01-17

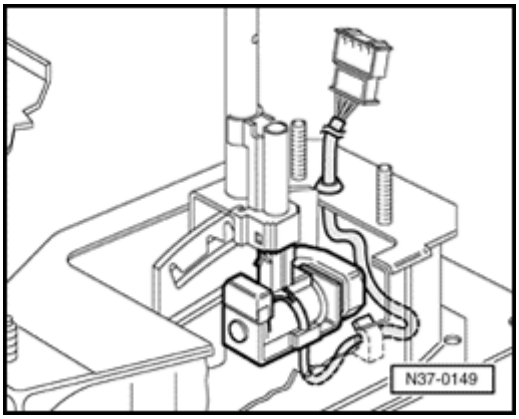

Fig. 8 Shiftlock Solenoid -N110-

Location: The Shiftlock Solenoid is located on the gear selector lever.

Removing and installing Shiftlock Solenoid

⇒ page 37-1

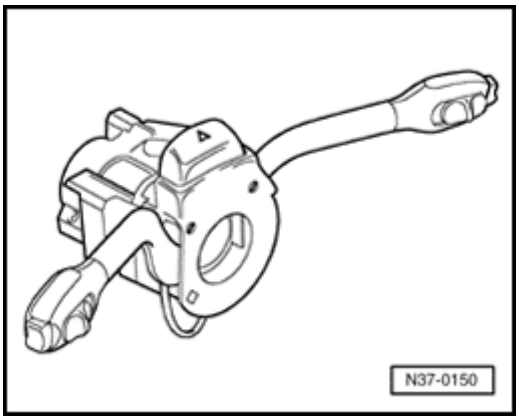

Fig. 9 Cruise Control Switch -E45-

Location: The Cruise Control Switch is located on the steering column switch.

Removing and installing Cruise Control Switch

⇒ *Repair Manual, Electrical Equipment, Repair Group 94*

-

01-18

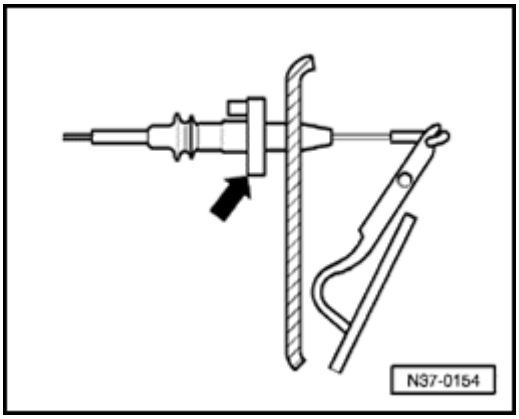

Fig. 10 Kickdown Switch -F8-

Location: The Kickdown Switch (arrow) is integrated with the Accelerator Pedal cable and is located on the bulkhead in the engine compartment.

Removing and installing Kickdown Switch

- Disconnect Accelerator Pedal cable to remove and install Kickdown Switch, then reinstall cable and adjust.

⇒ *Repair Manual, General, Engine, Repair Group 20*

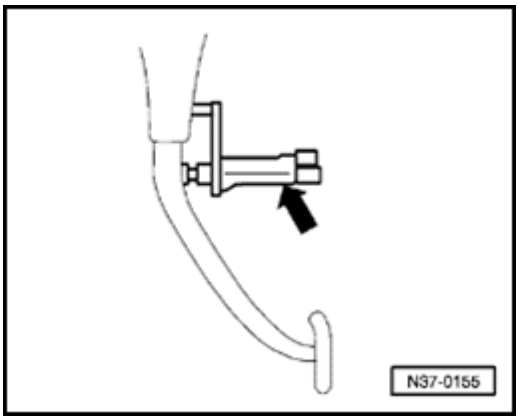

Fig. 11 Brake Light Switch -F-

Location: The Brake Light Switch (arrow) is located on the pedal cluster.

Removing and installing Brake Light Switch

⇒ *Repair Manual, Suspension, Wheels, Brakes, Steering, Repair Group 47*

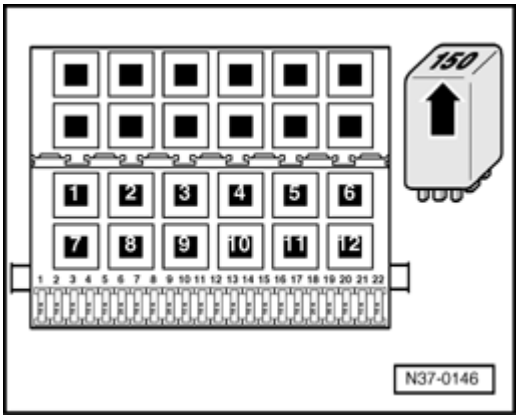

Fig. 12 Park/Neutral Position (PNP) Relay - 226-

Location: The PNP Relay is located on the auxiliary relay panel under the instrument panel, left side.

- Marked with number "150" (arrow)

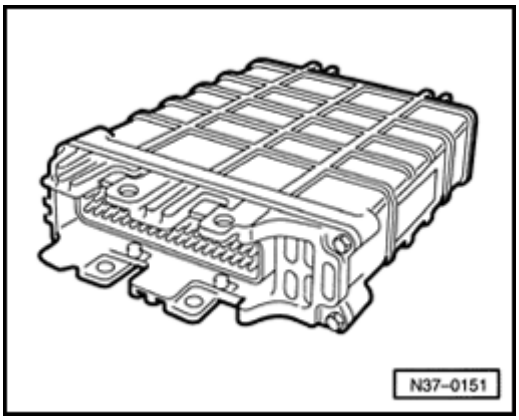

Fig. 13 Engine Control Module (ECM)

Location: The Engine Control Module (ECM) is located in the heating/ventilation intake plenum chamber, right side.

Removing and installing ECM

⇒ *Repair Manual, Fuel Injection & Ignition, Repair Group 24*

On Board Diagnostic (OBD) program

VAG 1551 Scan Tool (ST), connecting and selecting functions

Test conditions:

- Battery Positive Voltage (B+) OK
- Fuses 14 (S14) and 21 (S21) OK
- Transmission Ground (GND) connections OK:
  - Check Ground connections for corrosion and poor contact; repair if necessary.
    - ♦ Ground (GND) connection on left next to relay panel
  - Check Battery Ground (GND) strap and Ground (GND) strap between Battery and transmission.
- Selector lever in position "P" and handbrake applied.

- Remove Data Link Connector (DLC) cover on right side of instrument cluster.

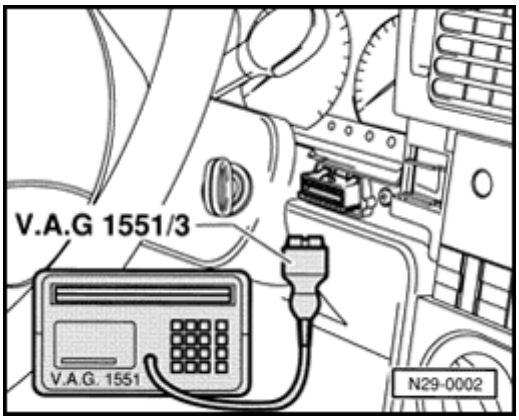

- With ignition switched OFF, connect VAG 1551 Scan Tool (ST) with VAG 1551/3 adapter cable.

01-21

VAG - ON BOARD DIAGNOSTIC HELP

1 - Rapid data transfer 1)

2 - Blink code output 1)

Indicated on display:

1) Operating modes -1- and -2- are displayed alternately

Notes:

- *Additional operating instructions can be printed out by pressing the HELP button on the VAG 1551 Scan Tool.*
- *The → button is used to advance the Scan Tool program sequence.*
- *An automatic check (bottons -00-) can be carried out in the Rapid data transfer operating mode. Then all vehicle control units will be interrogated automatically.*

⇒ *VAG 1551 Scan Tool (ST) operating instructions.*

- Switch ignition ON.
- Switch printer on with the PRINT button (indicator lamp in button lights up).
- Press button -1- for "Rapid data transfer" operating mode.

Rapid data transfer HELP

Enter address word

Indicated on display:

- Press buttons -0- and -2- (enter address word 02 for "Transmission Electronics").

01-22

Rapid data transfer

02 Transmission electronics

Indicated on display:

- Press -Q- button to confirm input.

096927731AD AG4 Gearbox 096 1283

Coding 00000 WSC 131071

Indicated on display:

The Transmission Control Module (TCM) identification, TCM coding and VAG 1551 Scan Tool dealership number are displayed.

Transmission Control Module (TCM) identification

Depending upon version (program level), the Transmission Control Module (TCM) can indicate an identification number different from that shown in the example. Control Module applications ⇒ Parts catalog microfiche.

- 096 927 731 AD: Part number
- AG4 Gearbox 096: 4-speed automatic transmission 096
- 1283: EPROM (Program level)
- Coding 00000: Not required at present
- WSC 131071: Dealership number of the VAG 1551 Scan Tool (ST) with which the most recent coding was carried out (example).

01-23

Control module does not answer! HELP

Indicated on display:

- A list of possible malfunction causes can be printed out by pressing the HELP button.
- After eliminating possible causes of malfunctions, again enter the address word 02 for "Transmission Electronics" and press -Q- to confirm.

If "Control module does not answer!" appears again:

Control module does not answer! HELP

Indicated on display:

Check Battery Positive Voltage (B+) supply to Transmission Control Module (TCM):

- Perform electrical test step 1 ⇒ page 01-59 .
- Check wiring connections to Data Link Connector (DLC) sockets.

⇒ *Electrical Wiring Diagrams, Troubleshooting and Component Locations binder.*

⇒ Diagnostic Trouble Code (DTC) table under DTC 65535 for control module malfunctioning, page 01-26 .

- Press → button.

Rapid data transfer HELP

Select function

Indicated on display:

- After pressing the HELP button, a list of the possible functions is printed out.

01-24

List of selectable functions

Function		Page
01 -	Check Transmission Control Module version ⇒ On Board Diagnostic (OBD) program	⇒ Page 01-20
02 -	Check DTC Memory	⇒ Page 01-25
04 -	Initiate basic setting	⇒ Page 01-39
05 -	Erase DTC Memory	⇒ Page 01-37
06 -	End output	
08 -	Read measured value block	⇒ Page 01-40

Further functions, which can be printed out by pressing the HELP button, need not be considered.

- After checking and completing a function, the VAG 1551 Scan Tool (ST) returns to the following start condition:

Rapid data transfer **HELP**

Select function

Indicated on display:

01-25

Diagnostic Trouble Code (DTC) Memory, checking

- Connect VAG 1551 Scan Tool and enter address word 02 for "Transmission Electronics" and advance until "Select function XX" appears in display ⇒ from page 01-20 .

Rapid data transfer **HELP**
Select function

Indicated on display:

- Press buttons -0- and -2-. ("Check DTC Memory").

Rapid data transfer
02 - Check DTC Memory

Indicated on display:

- Press -Q- button to confirm input.

DTC recognized!

The number of stored Diagnostic Trouble Codes (DTC) or "No DTC recognized" appears in the display.

Stored malfunctions are displayed in turn and printed out.

- Press → button.

After the last malfunction has been displayed and printed out, the malfunctions should be corrected as described in the Diagnostic Trouble Code (DTC) table ⇒ page 01-26 .

- Press → button.

Rapid data transfer **HELP**
Select function

Indicated on display:

Note:

After checking DTC Memory and correcting malfunctions:

- Erase DTC memory ⇒ page 01-37 .

01-26

Diagnostic Trouble Code (DTC) table

Note:

- *Malfunctions are recognized by the Transmission Control Module (TCM) -J217-, displayed by the VAG 1551 ScanTool (ST) and printed (with the printer switched ON) when the Diagnostic Trouble Code (DTC) Memory is checked.*

- *All the possible malfunctions that are recognized by the TCM -J217-, and displayed and printed by the VAG 1551 ScanTool (ST) are listed below, grouped according to the Diagnostic Trouble Code (DTC) number.*

- *If malfunction occurs only occasionally, or if the DTC Memory was not erased after making repairs to correct the malfunctions, these malfunctions will be displayed as sporadic DTC for a stipulated period of time ⇒ Transmission Control Module recognition of malfunctions, page 01-3 .*

- *If component malfunctions are detected when checking Diagnostic Trouble Code (DTC) Memory, also test the wiring to the components for short circuits and open circuits according to the wiring diagram ⇒ Electrical Wiring Diagrams, Troubleshooting and Component Locations binder.*

- *The DTCs are printed out in the Rapid data transfer mode only when the VAG 1551 Scan Tool printer is switched ON. Example: Diagnostic Trouble Code (5-digit) 65535*

VAG 1551 print-out	Possible cause of malfunction	Repairing malfunction
No DTC recognized!	If "No DTC recognized" appears after making repairs, the On Board Diagnostic program has been completed. In the event that the automatic transmission does not operate properly despite carrying out the On Board Diagnostic program, make repairs according to the Repair Manual.	

01-27

VAG 1551 print-out	Possible cause of malfunction	Repairing malfunction
00258 Solenoid Valve 1 -N88- Open circuit[1)] Short to Ground (GND)[1)]	Open circuit or short to Ground (GND) Solenoid Valve 1 -N88- malfunctioning	- Check wiring and connections according to wiring diagram [2)] - Read measured value block ⇒ page 01-40 ; display group number 04 - Carry out electrical tests ⇒ from page 01-59
00260 Solenoid Valve 2 -N89- Open circuit[1)] Short to Ground (GND)[1)]	Open circuit or short to Ground (GND) Solenoid Valve 2 -N89- malfunctioning	- Check wiring and connections according to wiring diagram [2)] - Read measured value block ⇒ page 01-40 ; display group number 04 - Carry out electrical tests ⇒ from page 01-59
00262 Solenoid Valve 3 -N90- Open circuit[1)] Short to Ground (GND)[1)]	Open circuit or short to Ground (GND) Solenoid Valve 3 -N90- malfunctioning	- Check wiring and connections according to wiring diagram [2)] - Read measured value block ⇒ page 01-40 ; display group number 04 - Carry out electrical tests ⇒ from page 01-59

[1)] One of these displays appears in addition to the relevant component.

[2)] First check connections for contact corrosion or water contamination and replace if necessary. When the display indicates solenoid malfunctions, especially check the 10-pin harness connector at the transmission between the valve body conductor strip and the wiring harness.

VAG 1551 print-out	Possible cause of malfunction	Repairing malfunction
00264 Solenoid Valve 4 -N91- Open circuit[1)] Short to Ground (GND)[1)]	Open circuit or short to Ground (GND) Solenoid Valve 4 -N91- malfunctioning	- Check wiring and connections according to wiring diagram [2)] - Read measured value block ⇒ page 01-40 ; display group number 04 - Carry out electrical tests ⇒ from page 01-59
00266 Solenoid Valve 5 -N92- Open circuit[1)] Short to Ground (GND)[1)]	Open circuit or short to Ground (GND) Solenoid Valve 5 -N92- malfunctioning	- Check wiring and connections according to wiring diagram [2)] - Read measured value block ⇒ page 01-40 ; display group number 04 - Carry out electrical tests ⇒ from page 01-59
00268 Solenoid Valve 6 -N93- Open circuit[1)] Short to Ground (GND)[1)]	Open circuit or short to Ground (GND) Solenoid Valve 6 -N93- malfunctioning	- Check wiring and connections according to wiring diagram [2)] - Read measured value block ⇒ page 01-40 ; display group number 02 - Carry out electrical tests ⇒ from page 01-59

[1)] One of these displays appears in addition to the relevant component.

[2)] First check connections for contact corrosion or water contamination and replace if necessary. When the display indicates solenoid malfunctions, especially check the 10-pin harness connector at the transmission between the valve body conductor strip and the wiring harness.

01-29

VAG 1551 print-out	Possible cause of malfunction	Repairing malfunction
00270 Solenoid Valve 7 -N94- Open circuit[1)] Short to Ground (GND)[1)]	Open circuit or short to Ground (GND) Solenoid Valve 7 -N94- malfunctioning	- Check wiring and connections according to wiring diagram [2)] - Read measured value block ⇒ page 01-40 ; display group number 04 - Carry out electrical tests ⇒ from page 01-59
00281 Vehicle Speed Sensor -G68-	Open circuit in wiring Vehicle Speed Sensor (VSS) -G68- malfunctioning	- Check wiring and connections according to wiring diagram [2)] - Read measured value block ⇒ page 01-40 ; display group number 02 - Carry out electrical tests ⇒ from page 01-59 - Replace Vehicle Speed Sensor (VSS) -G68- ⇒ page 01-16 , ⇒ 32
No signal	Input gear, impulse wheel loose	- Replace input gear ⇒ page 39-8

[1)] One of these displays appears in addition to the relevant component.

[2)] First check connections for contact corrosion or water contamination and replace if necessary. When the display indicates solenoid malfunctions, especially check the 10-pin harness connector at the transmission between the valve body conductor strip and the wiring harness.

VAG 1551 print-out	Possible cause of malfunction	Repairing malfunction
00293 Multi-Function TR Switch -F125- Undefined switch condition	Open circuit in wiring Multi-Function Transmission Range (TR) Switch -F125- malfunctioning	- Check wiring and connections according to wiring diagram [3)] - Read measured value block ⇒ page 01-40 ; display group number 01 - Carry out electrical tests ⇒ from page 01-59 - Replace Multi-Function TR Switch -F125- ⇒ page 01-15 , ⇒ 31
00300 Transm. Fluid Temperature Sensor -G93- [1)] No malfunction identified	Open circuit in wiring Transmission Fluid Temperature Sensor -G93- malfunctioning	- Check wiring and connections according to wiring diagram [2)] - Read measured value block ⇒ page 01-40 ; display group number 05 - Carry out electrical tests ⇒ from page 01-59

[1)] A malfunctioning Transmission Fluid Temperature Sensor is indicated.

[2)] First check connections for contact corrosion or water contamination and replace if necessary. When the display indicates solenoid malfunctions, especially check the 10-pin harness connector at the transmission between the valve body conductor strip and the wiring harness.

[3)] First check connections for contact corrosion or water contamination and replace if necessary.

VAG 1551 print-out	Possible cause of malfunction	Repairing malfunction
00518	Open or short circuit	- If DTC 00638 is also displayed, then repair this first - Check wiring and connections according to wiring diagram
Throttle Position Sensor -G69-	Throttle Position (TP) Sensor -G69- malfunctioning	- Read measured value block ⇒ page 01-40 ; display group numbers 01 and 03 - Carry out electrical tests ⇒ from page 01-59 - Replace Throttle Position (TP) Sensor -G69- ⇒ *Repair Manual, 2.0 Liter General, Engine or 1.8 Liter General, Engine or 2.8 Liter VR6 General, Engine, Repair Group 24* - Bring system to basic settings ⇒ page 01-39
Signal outside tolerances	On vehicles with 6-cylinder engine from 01.93: Motronic Engine Control Module (ECM) malfunctioning (signal from the Throttle Position (TP) Sensor -G69- is routed to Transmission Control Module (TCM) -J217- via ECM)	- Vehicles with 6-cylinder engine: Replace Motronic Engine Control Module (ECM) -J220- ⇒ *Repair Manual, 2.8 Liter VR6 Fuel Injection & Ignition, Repair Group 24* - Bring system to basic settings ⇒ page 01-39

VAG 1551 print-out	Possible cause of malfunction	Repairing malfunction
00529 RPM information missing	Open circuit in wiring	- Check wiring and connections according to wiring diagram - Read measured value block ⇒ page 01-40 ; display group number 03 - Check Engine Control Module ⇒ *Repair Manual, Fuel Injection & Ignition, Repair Group 01 for relevant engine code*
00532 Supply Voltage (B+)	Battery malfunctioning Insufficient system voltage	- Test Battery Positive Voltage (B+) ⇒ Repair Manual, Electrical Equipment, Repair Group 27 - Read measured value block ⇒ page 01-40 ; display group number 02 - Test voltage supply to Transmission Control Module -J217- - Carry out electrical tests ⇒ page 01-59

VAG 1551 print-out	Possible cause of malfunction	Repairing malfunction
00545 Engine/trans. electrical connection Open circuit[1)] Short to Ground (GND)[1)]	Open circuit or short to Ground (GND) No connection between Engine Control Module (ECM) and Transmission Control Module (TCM)	- Check wiring and connections according to wiring diagram - Read measured value block ⇒ page 01-40 ; display group number 05 - Check Engine Control Module ⇒ *Repair Manual, Fuel Injection & Ignition, Repair Group 01 for relevant engine code* - Bring system to basic settings ⇒ page 01-39
00596 Short circuit between solenoid valve lines	10-pin connector between valve body conductor strip and wiring loom Conductor strip to valve body defective	- Check wiring and connections according to wiring diagram - Carry out electrical tests ⇒ from page 01-59 - Replace valve body ⇒ page 38-22

[1)] One of these displays appears in addition to the relevant component.

VAG 1551 print-out	Possible cause of malfunction	Repairing malfunction
00638 Engine/trans. electrical connection 2 No signal	Open circuit or short to Ground (GND) No connection between Engine Control Module (ECM) and Transmission Control Module (TCM)	- Check wiring and connections according to wiring diagram - Read measured value block ⇒ page 01-40 ; display group number 05 - Check Engine Control Module, replace if necessary ⇒ *Repair Manual, Fuel Injection & Ignition, Repair Group 01 for relevant engine code* - Bring system to basic settings ⇒ page 01-39
00641 Transmission fluid temperature Signal too large	Transmission becomes too hot, max. 148 ° C (298 ° F). If ATF temperature is too high, transmission shifts down into next lower gear. Trailer load of vehicle too high ATF level not correct	- Check ATF level ⇒ page 37-43 - Read measured value block ⇒ page 01-40 ; display group number 05; read transmission fluid temperature

VAG 1551 print-out	Possible cause of malfunction	Repairing malfunction
00652 Transmission range controller Incorrect signal	Electrical/hydraulic malfunction Clutch or valve body defective	- Read measured value block ⇒ page 01-40 ; display group number 04 and determine gear in which malfunction occurs
00660 Kickdown Sw./Throttle Position Sensor Incorrect signal	Open circuit in wiring	- Check wiring and connections according to wiring diagram
	Throttle Position (TP) Sensor -G69- malfunctioning	- Carry out repairs for Throttle Position (TP) Sensor -G69- described under Repairing malfunction, DTC 00518
	Kick Down Switch -F8- malfunctioning	- Read measured value block ⇒ page 01-40 ; display group number 01 - Carry out electrical tests ⇒ from page 01-59 - Adjust Accelerator Pedal cable or replace if necessary ⇒ *Repair Manual, 2.0 Liter, 1.8 Liter or 2.8 Liter VR6 Fuel Injection & Ignition, Repair Group 24*

VAG 1551 print-out	Possible cause of malfunction	Repairing malfunction
65535 Control Module malfunctioning	Transmission Control Module (TCM) -J217- malfunctioning	- Replace Transmission Control Module (TCM) -J217- ⇒ page 01-7 - Bring system into basic settings ⇒ page 01-39

Note:

The Transmission Control Module (TCM) -J217- should NOT be replaced and brought into the basic setting (⇒ page 01-39) until the cause of the malfunction has been determined and the following malfunctions have been corrected:

- *Mechanical malfunctions*
- *Hydraulic malfunctions*
- *All affected electrical components and cable connections*

01-37

Diagnostic Trouble Code (DTC) Memory, erasing

Requirement:

- DTC Memory checked ⇒ page 01-25

After DTC Memory has been checked:

Rapid data transfer **HELP**
Select function

Indicated on display:

- Press buttons -0- and -5- (to select function 05, "Erase DTC Memory").

Rapid data transfer
05 Erase DTC Memory

Indicated on display:

- Press -Q- button to confirm input.

Attention!
DTC Memory is not interrogated.

Indicated on display:

Note:

If the ignition was switched OFF, between checking and erasing the DTC Memory for example, then the DTC Memory will not be erased.

- Adhere strictly to the sequence of operations, i.e. always check DTC Memory first before attempting to erase.

01-38

Rapid data transfer **DTC Memory is erased**	→	Indicated on display: (DTC Memory will be erased approx. 5 seconds after the message is displayed.) DTC Memory is now erased. ***Note:*** *Wait about 1 minute before checking DTC Memory again.*
System cannot be interrogated!	→	Indicated on display:
1 DTC recognized **00811 3333** **System cannot be interrogated**	→	Print-out with printer switched on: Transmission Control Module (TCM) -J217- given too little time to recognize malfunctions. - Wait about 1 minute before checking DTC Memory again. - After checking and erasing DTC Memory, carry out a test drive and checking DTC Memory again. When the DTC Memory is interrogated, the following message should be displayed: "No DTC recognized"

01-39

Basic setting, initiating

Note:

The basic setting should be initiated after performing the following repairs:

- *Replacing engine*
- *Replacing Engine Control Module (ECM)*
- *Replacing or altering throttle valve*
- *Adjusting throttle valve (setting idle speed).*
- *Replacing Throttle Position (TP) Sensor -G69-*
- *Altering setting of Throttle Position (TP) Sensor -G69- (e.g. when adjusting Closed Throttle Position Switch)*
- *Replacing Transmission Control Module (TCM) -J217-*

- Connect VAG 1551 Scan Tool (ST), enter address word 02 for "Transmission Electronics," and advance Scan Tool program until "Select function XX" appears in the display ⇒ page 01-20 .

Rapid data transfer **HELP**

Select function

Indicated on display:

- Press buttons -0- and -4- (to select function 04 "Basic setting").

Note:

Accelerator Pedal must remain in Closed Throttle Position.

01-40

Rapid data transfer **04 Basic setting**		⮜	Indicated on display: - Press -Q- button to confirm input.
Basic setting **Input display group number**	**HELP**	⮜	Indicated on display: - Press button -0- twice (to input display group 00). - Press -Q- button to confirm input.
System in basic setting	→	⮜	Indicated on display: ♦ System is now in basic setting. - Depress Accelerator Pedal as far as kickdown and hold in this position for 3 seconds. - Press → button.
Rapid data transfer **Select function**	**HELP**	⮜	Indicated on display: **Reading measured value block** - Connect VAG 1551 Scan Tool (ST), enter address word 02 for "Transmission Electronics" and advance Scan Tool program until "Select function XX" is indicated on display ⇒ from page 01-20 .
Rapid data transfer **Select function**	**HELP**	⮜	Indicated on display: Press buttons -0- and -8- (to select function 08 "Read measuring value block")

01-41

Rapid data transfer

08 - Read measuring value block

Indicated on display:

- Press -Q- button to confirm input.

Read measuring value block

Input display group number

Indicated on display:

- Enter display group number ⇒ List of selectable display groups, page 01-42 .
- Press -Q- button to confirm input.

Reading measured value block 1 →

→ **1** → **2** → **3** → **4**

Indicated on display:

There are always 4 display fields in the measured value block (displayed in physical units if necessary).

Key to interpreting individual values in display fields 1 through 4 ⇒ Test table, page 01-44 .

01-42

Reading measured value block 5 →

45 ° C 0011011 0 900 rpm

List of selectable display groups

Display group No. 01

Display group No. 02

Display group No. 03

Display group No. 04

Display group No. 05

Display group No.	Display field	Designation
01	1	Selector lever position
	2	Throttle Position (TP) Sensor voltage
	3	Accelerator Pedal value
	4	Switch positions
02	1	Actual Solenoid Valve 6 -N93- voltage
	2	Specified Solenoid Valve 6 -N93- voltage
	3	Battery Positive Voltage (B+)
	4	Voltage at Vehicle Speed Sensor (VSS) -G68-
03	1	Vehicle speed
	2	Engine speed
	3	Gear selected
	4	Accelerator Pedal value
04	1	Solenoid valves
	2	Gear selected

	3	Selector lever position
	4	Vehicle speed
05	1	Transmission fluid (ATF) temperature
	2	Switch output
	3	Gear to select
	4	Engine speed

.

01-43

Reading measured value block 4 →

1001 00 0 P 0 km/h

Notes:

- *If the printer is switched ON, the current display is printed out on the log.*
- *If the values in all the display fields are as specified:*

- Press button → .

Rapid data transfer **HELP**

Select function

Indicated on display:

Test table

Display Group No.	Display field	Designation	Test conditions		Specified display on VAG 1551	Repairing malfunction
01	1	Selector lever position - Multi-Function Transmission Range (TR) Switch -F125-	Stationary	P	P	- Check Multi-Function Transmission Range (TR) Switch -F125-: Carry out electrical tests ⇒ from page 01-59
			Selector	R	R	
			lever	N	N	
			in:	D	D	
				3	3	
				2	2	
cont d				1	1	

Display Group No.	Display field	Designation	Test conditions		Specified display on VAG 1551	Repairing malfunction
01	2	Voltage of Throttle Position (TP) Sensor - G69-	Stationary	Idling - min. Idling - max.	0.156 V 0.8 V 1)	When accelerating from idle to Wide Open Throttle, voltage value increases constantly - Vehicles from 01.93 with 6-cylinder engine: carry out On Board Diagnostic (OBD) program for Engine Control Module (ECM) - Check Throttle Position (TP) Sensor -G69-: Carry out electrical tests ⇒ from page 01-59 - Adjusting or replacing Throttle Position (TP) Sensor -G69-: ⇒ *Repair Manual, 1.8 Liter Fuel Injection & Ignition, 2.0 Liter Fuel Injection & Ignition or 2.8 Liter VR6 Fuel Injection &Ignition, Repair Group 24* - Bring system into basic settings ⇒ page 01-39
				Wide Open Throttle - min. - max.	3.5 V 4.680 V	

cont d					

[1] Engine with Mono-Motronic: Engine Coolant Temperature (ECT) min. 80 ° C (176 ° F).

01-46

Display Group No.	Display field	Designation	Test conditions		Specified display on VAG 1551	Repairing malfunction
01	3	Accelerator Pedal value	Stationary	Idling [1]	0-1%	When accelerating from idle to Wide Open Throttle, percent (%) value increases constantly
				Wide Open Throttle	99-100%	- Bring system into basic settings ⇒ page 01-39
	4	Switch positions				
		Brake Light Switch -F- Display 1	Brake	Operated	1	- Check Brake Light Switch -F-: Carry out electrical tests ⇒ from page 01-59
				Not operated	0	
		Traction control system 2		Activated	1	Not applicable for vehicles covered by this manual
				Not activated	0	
		Electronic program switch 3		"S" selected	1	Electronic program switch is integrated in control unit and activates the "E" or "S" program automatically
cont d	cont d			"E" selected	0	

[1] Engine with Mono-Motronic: Engine Coolant Temperature (ECT) min. 80 ° C (176 ° F).

01-47

Display Group No.	Display field	Designation		Test conditions		Specified display on VAG 1551	Repairing malfunction
01	4	Kick Down Switch -F8-	Display 4		Operated	1	- Check Kick Down Switch -F8-: Carry out electrical tests ⇒ from page 01-59
					Not operated	0	
		Multi-FunctionTrans-mission Range (TR) Switch -F125-	5	Selector lever in:	R, N, D, 3, 2	1	- Check Multi-Function Transmission Range (TR) Switch -F125-: Carry out electrical tests ⇒ from page 01-59
					P, 1	0	
			6	Selector lever in:	P, R, 2, 1	1	
					N, D, 3	0	
			7	Selector lever in:	P, R, N, D	1	
					3, 2, 1	0	
			8	Selector lever in:	P, R, N,	1	
					D, 3, 2, 1	0	

01-48

Display Group No.	Display field	Designation	Test conditions		Specified display on VAG 1551	Repairing malfunction
02	1	Actual current of Solenoid Valve 6 -N93-	Stationary	Wide Open Throttle	0.0 A	- Check Solenoid Valve -N93-: Carry out electrical tests ⇒ from page 01-59
				Idling - max.	1.1 A	
	2	Specified current of Solenoid Valve 6 -N93-	Stationary	Wide Open Throttle	0.0 A	
				Idle - max.	1.1 A	
	3	Battery Positive Voltage (B+)	Stationary	min.	10.8 V	- Check Battery, replace if necessary - Check voltage supply to Transmission Control Module -J217-: Carry out electrical tests ⇒ from page 01-59 - Replace Transmission Control Module -J217- ⇒ page 01-7 - Bring system into basic settings ⇒ page 01-39
				max.	16.0 V	
	4	Vehicle Speed Sensor -G68-	Stationary	min.	2.20 V	- Check Vehicle Speed Sensor -G68-: Carry out electrical tests ⇒ from page 01-59
				max.	2.52 V	

01-49

Display Group No.	Display field	Designation	Test conditions		Specified display on VAG 1551	Repairing malfunction
03	1	Vehicle speed	Driving [1]		km/h	Speedometer reading and VAG 1551 Scan Tool (ST) display may differ slightly
	2	Engine Speed (RPM)	With engine running		RPM	- Tune engine if necessary ⇒ *Repair Manual, 2.0 Liter Fuel Injection & Ignition, 1.8 Liter Fuel Injection & Ignition or 2.8 Liter VR6 Fuel Injection & Ignition, Repair Group 24*
	3	Gear selected	Driving[1]	Neutral	0	- Check Solenoid Valves: Carry out electrical tests ⇒ from page 01-59
				Reverse	R	
				1 hydraulic	1	
				2 hydraulic	2	
				3 hydraulic	3H	
cont d				4 mechanical	4	

[1] While driving with drive gear selected a second technician is needed for reading the specified values

01-50

Display Group No.	Display field	Designation	Test conditions		Specified display on VAG 1551	Repairing malfunction
03	4	Accelerator Pedal value	Driving [1]	Idle	0-1%	When accelerating from idle to Wide Open Throttle, percent (%) value increases constantly - Bring system into basic settings ⇒ Page 01-39
				Wide Open Throttle	99-100%	

[1] While driving with drive gear selected a second technician is needed for reading the specified values

01-51

Reading measured value block, display group 04 - Checking Solenoid Valves while driving

- *The Solenoid Valves can be checked while driving with the Read measuring value block function (08), display group number 04.*
- *The table shows how the Solenoid Valves -N88-, -N89-, -N90- and -N91- are controlled in each selector lever position. The Solenoid Valves control the switching valves to the relevant gears.*
- *The Solenoid Valves -N92- and -N94- are supplementary valves that affect gear selection changes and are only controlled during gear changes. They are displayed in positions 5 and 6.*
- *VAG 1551 Scan Tool display field 1 is made up of 6 characters (0000 00) and is read as follows:*

Display on VAG 1551 Scan Tool (ST)	**Display field 1:**					
	Display 1	Display 2	Display 3	Display 4	Display 5	Display 6
	-N88-	-N89-	-N90-	-N91-	-N92-	-N94-

- *Non-activated Solenoid Valves are displayed by a 0*
- *Activated Solenoid Valves are displayed by a 1*

Display Group No.	Display field	Designation	Test conditions Selector lever in:		Specified display on VAG 1551	Repairing malfunction if not to specification
04	1	Solenoid Valve activation indicated by VAG 1551 display: -N88- position 1 -N89- position 2 -N90- position 3 -N91- position 4 -N92- position 5 -N94- position 6		**P**	1 0 0 1 00	Solenoid Valves are selected according to driving conditions. - Check Solenoid Valves ⇒ electrical tests, from page 01-59
				R[1)]	0 0 0 0 00	
				N	1 0 0 1 00	
			D[1)]	1	0 0 0 1 00	
				2	0 1 0 1 00	
				3H	0 0 0 0 00	
				4	1 1 1 1 00	
			3[1)]	1	0 0 0 1 00	
				2	0 1 0 1 00	
				3H	0 0 0 0 00	
			2[1)]	1	0 0 0 1 00	
				2	0 1 0 1 00	

			1[1)] 1	0 0 0 1 00	

[1)] While driving with drive gear selected a second technician is needed for reading the specified values.

Display Group No.	Display field	Designation	Test conditions		Specified display on VAG 1551	Repairing malfunction
04	2	Gear selected	Driving [1]	Neutral	0	- Check Solenoid Valves ⇒ electrical tests, from page 01-59
				Reverse	R	
				1 hydraulic	1	
				2 hydraulic	2	
				3 hydraulic	3H	
cont d				4 mechanical	4	

[1] While driving with drive gear selected a second technician is needed for reading the specified values

Display Group No.	Display field	Designation	Test conditions		Specified display on VAG 1551	Repairing malfunction
04	3	Selector lever position	Driving [1]	P	P	- Check Multi-Function Transmission Range (TR) Switch -F125- ⇒ electrical tests, from page 01-59
				R	R	
				N	N	
				D	D	
				3	3	
				2	2	
				1	1	
	4	Vehicle speed	Speed at which vehicle is driven [1]		km/h	The Speedometer reading and VAG 1551 Scan Tool (ST) display may differ slightly

[1] While driving with drive gear selected a second technician is needed for reading the specified values

01-55

Display Group No.	Display field	Designation	Test conditions	Specified display on VAG 1551	Repairing malfunction
05	1	Transmission fluid (ATF) temperature is checked at approx. 50-70 ° C	Stationary with engine running. Exact temperature is displayed from approx. 40 ° C	° C	- Check Transmission Fluid Temperature Sensor -G93- ⇒ electrical tests, from page 01-59
	2	Selector outputs	Driving [1)] Engine management		- Check wiring according to wiring diagram - Replace Engine Control Module (ECM) ⇒ *Repair Manual, 2.0 Liter Fuel Injection & Ignition, 1.8 Liter Fuel Injection & Ignition or 2.8 Liter VR6 Fuel Injection & Ignition, Repair Group 24* - Replace Transmission Control Module (TCM) -J217- ⇒ page 01-7 - Bring system into basic settings ⇒ page 01-39
		Display 1	is switched on	1	
			is switched off	0	
		2	switched on	1	
cont d	cont d		switched off	0	

1) While driving with drive gear selected a second technician is needed for reading the specified values

01-56

Display Group No.	Display field	Designation	Test conditions	Specified display on VAG 1551	Repairing malfunction
05	2	Selector outputs	Shiftlock Solenoid -N110-		- Check wiring according to wiring diagram - Check Shiftlock Solenoid -N110- ⇒ electrical tests, from page 01-59
		Display 3	is switched on	1	
			is switched off	0	
		4	switched on	1	
			switched off	0	
		5	Cruise control switched on	1	- Check wiring according to wiring diagram - Check cruise control ⇒ *Electrical Wiring Diagrams, Troubleshooting and Component Locations binder*
cont d	cont d		switched off	0	

01-57

Display Group No.	Display field	Designation	Test conditions	Specified display on VAG 1551	Repairing malfunction
05	2	Display 6	Air conditioner was switched off	1	- Check routing of wiring according to wiring diagram
			was not switched off	0	- Check air conditioner ⇒ *Repair Manual, Heating and Air Conditioning, Repair Group 87*
		7	Park/Neutral signal Selector lever in:		- Check routing of wiring according to wiring diagram
			P, N	1	
cont d			1, 2, 3, D	0	

Display Group No.	Display field	Designation	Test conditions		Specified display on VAG 1551	Repairing malfunction
05	3	Gear to select	Driving [1]	Neutral	0	- Check Solenoid Valves: Carry out electrical tests ⇒ from page 01-59
				Reverse	R	
				1 hydraulic	1	- If no gearshifts are completed, a clutch or brake may be malfunctioning
				2 hydraulic	2	
				3 hydraulic	3H	- Replace Transmission Control Module (TCM) -J217- ⇒ page 01-7
				4 mechanical	4	
	4	Engine Speed (RPM)	Driving [1] with engine running		RPM	- Tune engine if necessary ⇒ *Repair Manual, 2.0 Liter Fuel Injection & Ignition, 1.8 Liter Fuel Injection & Ignition or 2.8 Liter VR6 Fuel Injection & Ignition, Repair Group 24*

[1] While driving with drive gear selected a second technician is needed for reading the specified values

Transmission electrical testing

Test requirements:

- Battery Positive Voltage (B+) OK
- Fuses 14 (S14) and 21 (S21) OK
- Transmission Ground (GND) connections OK:
  - ♦ Ground (GND) connection located on left next to relay panel
  - Check Ground connections for corrosion and poor contact; repair if necessary.
  - Check Battery Ground (GND) strap as well as Ground (GND) strap between Battery and transmission.

CAUTION!

To avoid damaging the electronic components, select the appropriate function and measurement range on the test equipment before connecting the test leads.

01-60

Note:

- *Use the hand multimeter (Fluke 83, VAG 1526 or equivalent)for testing.*
- *Use auxiliary cables from the VAG 1594 adapter kit, and the test box as specified, for connecting test equipment.*
- *The specified values are valid for ambient temperatures ranging from 0-40° C (32-104° F).*
- *If the measured values differ from the specified values, determine the cause by using the wiring diagrams.*
- *If the measured values differ only slightly from the specified values, clean the sockets and connectors of the test equipment and test leads, then repeat the test. Before replacing a particular component, test the wiring and connections and, particularly if specified values are below 10 ohms (10Ω), repeat the resistance measurement.*

Electrical testing on Transmission Control Module with 38-pin connector ⇒ page 01-61

Electrical testing on Transmission Control Module with 68-pin connector ⇒ page 01-73

01-61

Electrical testing on Transmission Control Module (TCM) with 38-pin connector

The Transmission Control Module (TCM) -J217- is located under the rear seat.

Wiring from the 38-pin TCM connector can be checked according to the wiring diagram using the VAG 1598 test box.

- Switch ignition OFF.

- Disconnect multi-pin connector from Transmission Control Module (TCM) -J217-.

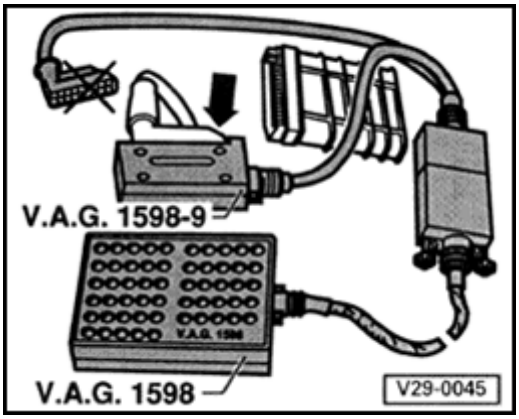

- Connect VAG 1598 test box to multi-pin connector using VAG 1598/9 adapter.

Resistance measurements:

- ♦ VAG 1598/9 adapter disconnected from TCM

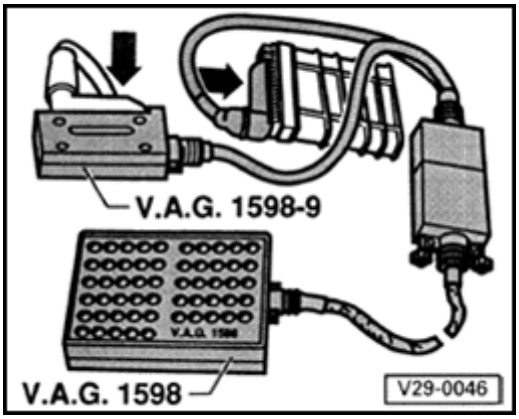

Voltage measurements:

- ♦ VAG 1598/9 adapter connected to TCM (arrows)

01-62

Terminal assignment for 38-pin Transmission Control Module (TCM) - 217- connector(also sockets on VAG 1598 test box)

1- Ground (GND) (terminal 31)

2- Solenoid Valve 4 -N91-

3- Solenoid Valve 3 -N90-

4- Not assigned

5- Park/Nueltral signal

6- On Board Diagnostic K-wire

7- Not assigned

8- Kickdown for air conditioner

9- Throttle Position (TP) Sensor -G69-

10- Throttle Position (TP) Sensor -G69-[1)]

11- Not assigned

12- Selector lever display -or- not assigned

13- Vehicle Speed Sensor (VSS) -G68- screening

14- Not assigned

15- Multi-Function Transmission Range (TR) Switch -F125-

16- Multi-Function Transmission Range (TR) Switch -F125

17- Kick Down Switch -F8-

18- Battery Positive Voltage (B+) supply for Solenoid Valves

20- Shiftlock Solenoid -N110-

21- Solenoid Valve 7 -N94-

22- Solenoid Valve 1 -N88-

23- Solenoid Valve 2 -N89-

24- Solenoid Valve 5 -N92-

25- Solenoid Valve 6 -N93-

26- Brake Light Switch -F- signal voltage

27- Engine = TD-(RPM) signal

28- Engine = Ignition timing influence

29- Throttle Position (TP) Sensor -G69- Ground (GND)[1)]

30- Transmission fluid (ATF) temperature

31- Not assigned

32- Vehicle Speed Sensor (VSS) -G68-

33- Vehicle Speed Sensor (VSS) -G68-

34- Multi-Function Transmission Range (TR) Switch -F125-

35- Multi-Function Transmission Range (TR) Switch -F125

36- Not assigned

37- Idle Switch

19- Battery Positive Voltage (B+) (terminal 15)

38- Cruise Control system

[1)] Voltage supply (contacts 10 and 29) not assigned on vehicles with 6-cylinder engine; Throttle Position (TP) Sensor signal (terminal 9) is routed to the Transmission Control Module (TCM) via the Motronic Engine Control Module (ECM).

01-63

List of test steps (TCM with 38-pin connector)

Note:

Only carry out test steps listed in Diagnostic Trouble Code (DTC) table, or referred to while reading measured value block.

Component checked		Component checked	
Battery Positive Voltage (B+) supply from Transmission Control Module (TCM) -J217-	- Carry out test step 1	Solenoid Valve 5 -N92-	- Carry out test step 10
Throttle Position (TP) Sensor -G69-	- Carry out test step 2	Solenoid Valve 6 -N93-	- Carry out test step 11
Shiftlock Solenoid -N110-	- Carry out test step 3	Solenoid Valve 7 -N94-	- Carry out test step 12
Brake Light Switch -F-	- Carry out test step 4	Kick Down Switch -F8-	- Carry out test step 14
Multi-Function Transmission Range (TR) Switch -F125-	- Carry out test step 5	Vehicle Speed Sensor -G68-	- Carry out test step 15
Solenoid Valve 1 -N88-	- Carry out test step 6	Transmission Fluid Temperature Sensor -G93-	- Carry out test step 16
Solenoid Valve 2 -N89-	- Carry out test step 7		
Solenoid Valve 3 -N90-	- Carry out test step 8		
Solenoid Valve 4 -N91-	- Carry out test step 9		

01-64

Test table

Switch to voltage measuring range 20 V					
Test step	**VAG 1598 sockets**	**Test of**	• Test conditions - Additional operations	**Specified value**	**Repairing malfunction**
1	19 + 1	Supply voltage from Transmission Control Module (TCM) -J217-	• Ignition switched ON	approx. Battery Positive Voltage (B+)	- Check wiring according to wiring diagram - Check wiring from pin 1 to Ground (GND) - Check wiring from pin19 to terminal 15 central electrics

01-65

Switch to voltage measuring range 20 V					
Test step	**VAG 1598 sockets**	**Test of**	• Test conditions - Additional operations	**Specified value**	**Repairing malfunction**
2	10 + 29	Throttle Position (TP) Sensor -G69- [1]	• Ignition switched ON - Disconnect connector from Throttle Position (TP) Sensor	4.6 to 5 V	- Check routing of wiring according to wiring diagram - Replace Transmission Control Module (TCM) -J217- ⇒ page 01-7 - Bring system into basic setting ⇒ page 01-39
	9 + 29		• Ignition switched ON		When accelerating from idle to full throttle, voltage level increases constantly - Check Throttle Position (TP) Sensor, replace if necessary ⇒ *Repair Manual, 2.0 Liter Fuel Injection & Ignition or 1.8 Liter Fuel Injection & Ignition,Repair Group 24* - Bring system into basic setting ⇒ page 01-39
			Idling - min.	0.156 V	
			Idling - max.	0.8 V	
			Wide Open Throttle - min.	3.5 V	
			- max.	4.68 V	

[1] Engine with Mono-Motronic: Engine Coolant Temperature (ECT) min. 80 ° C (176 ° F).

Not checked on vehicles with 6-cylinder engine; Signal from TP Sensor -G69- is directed to TCM via ECM and can only be measured by the "Reading measured value block" function using the VAG 1551 Scan Tool ⇒ page 01-40

01-66

Switch to voltage measuring range 20 V					
Test step	**VAG 1598 sockets**	**Test of**	• Test conditions - Additional operations	**Specified value**	**Repairing malfunction**
3	19 + 20	Shiftlock Solenoid -N110-	• Ignition switched ON • Selector lever in position P or N	approx. Battery Positive Voltage (B+)	- Check wiring according to wiring diagram - Replace Transmission Control Module (TCM) -J217- ⇒ page 01-7 - Bring system into basic setting ⇒ page 01-39
			• With brake operated	0 V	- Carry out test step 4; if necessary replace Transmission Control Module (TCM) -J217- ⇒ page 01-7 - Bring system into basic setting ⇒ page 01-39
4	26 + 1	Brake Light Switch -F-	• Ignition switched ON • Brake pedal not depressed	0 V	- Check wiring according to wiring diagram - Replace Brake Light Switch -F-
			- Brake pedal depressed	approx. Battery Positive Voltage (B+)	

01-67

Switch to voltage measuring range 20 V					
Test step	**VAG 1598 sockets**	**Test of**	• Test conditions - Additional operations	**Specified value**	**Repairing malfunction**
5	34 + 1	Multi-Function Transmission Range (TR) Switch -F125-	• Ignition switched ON - Selector lever positions R, N, D, 3 and 2	4.5 to 5 V	- Check wiring according to wiring diagram - Check Multi-Function TR Switch -F125- for contact corrosion and replace if necessary - Replace Multi-Function TR Switch -F125- ⇒ page 01-15 , Fig. 5
			- Selector lever positions P and 1	0 to 0.8 V	
	15 + 1		- Selector lever positions P, R 2 and 1	4.5 to 5 V	
			- Selector lever positions N, D and 3	0 to 0.8 V	
	35 + 1		- Selector lever positions P, R, N and D	4.5 to 5 V	
			- Selector lever positions 3, 2 and 1	0 to 0.8 V	
	16 + 1		- Selector lever positions P, R, and N	approx. Battery Positive Voltage (B+)	

			- Selector lever positions D, 3, 2 and 1	0 to 0.8 V	

01-68

Switch to resistance measuring range 200 Ω					
Test step	**VAG 1598 sockets**	**Test of**	• Test conditions - Additional operations	**Specified value**	**Repairing malfunction**
6	22 + 18	Solenoid Valve 1 - N88-	• Ignition switched OFF	55 to 65 Ω	- Check routing of wiring according to wiring diagram
	22 + 1		• Transmission Control Module (TCM) -J217- disconnected	infinite Ω 1)	- Replace valve body ⇒ page 38-22
7	23 + 18	Solenoid Valve 2 - N89-	• Ignition switched OFF	55 to 65 Ω	- Check routing of wiring according to wiring diagram
	23 + 1		• TCM -J217- disconnected	infinite Ω 1)	- Replace valve body ⇒ page 38-22
8	3 + 18	Solenoid Valve 3 - N90-	• Ignition switched OFF	55 to 65 Ω	- Check routing of wiring according to wiring diagram
	3 + 1		• TCM -J217- disconnected	infinite Ω 1)	- Replace valve body ⇒ page 38-22
9	2 + 18	Solenoid Valve 4 - N91-	• Ignition switched OFF	55 to 65 Ω	- Check routing of wiring according to wiring diagram
	2 + 1		• TCM -J217- disconnected	infinite Ω 1)	- Replace valve body ⇒ page 38-22

1) Switch multimeter to largest Ω (Ohms) range

01-69

Switch to resistance measuring range 200 Ω					
Test step	**VAG 1598 sockets**	**Test of**	• Test conditions - Additional operations	**Specified value**	**Repairing malfunction**
10	24 + 18	Solenoid Valve 5 - N92-	• Ignition switched OFF	55 to 65 Ω	- Check routing of wiring according to wiring diagram - Replace valve body ⇒ page 38-22
	24 + 1		• Transmission Control Module (TCM) -J217- disconnected	infinite Ω 1)	
11	25 + 18	Solenoid Valve 6 - N93-	• Ignition switched OFF	4.5 to 6.5 Ω	- Check routing of wiring according to wiring diagram - Replace valve body ⇒ page 38-22
	25 + 1		• TCM -J217- disconnected	infinite Ω 1)	
12	21 + 18	Solenoid Valve 7 - N94-	• Ignition switched OFF	55 to 65 Ω	- Check routing of wiring according to wiring diagram - Replace valve body ⇒ page 38-22
	21+ 1		• TCM -J217- disconnected	infinite Ω 1)	

1) Switch multimeter to largest Ω (Ohms) range

01-70

Switch to resistance measuring range 200 Ω					
Test step	**VAG 1598 sockets**	**Test of**	• Test conditions - Additional operations	**Specified value**	**Repairing malfunction**
13	19 + 20	Shiftlock Solenoid -N110-	• Ignition switched OFF • TCM -J217- disconnected	14 to 25 Ω	- Check routing of wiring according to wiring diagram - Replace Shiftlock Solenoid -N110- ⇒ Selector mechanism, servicing, page 37-1
14	1 + 17	Kick Down Switch -F8-	• Ignition switched OFF • Transmission Control Module (TCM) -J217- disconnected • Accelerator Pedal NOT depressed	infinite Ω 1)	- Check routing of wiring according to wiring diagram - Adjust Accelerator Pedal cable, or replace ⇒ *Repair Manual, 2.0 Liter General, Engine, 1.8 Liter General, Engine or 2.8 Liter VR6 General, Engine, Repair Group 20*
			- Depress Accelerator Pedal pressed down as far as kickdown	less than 1.5 Ω	

1) Switch multimeter to largest Ω (Ohms) range

01-71

Switch to resistance measuring range 20 K Ω					
Test step	**VAG 1598 sockets**	**Test of**	• Test conditions - Additional operations	**Specified value**	**Repairing malfunction**
15	32 + 33	Vehicle Speed Sensor (VSS) -G68-	• Ignition switched OFF • Transmission Control Module (TCM) -J217- disconnected min. max.	 0.8 KΩ 0.9 KΩ	- Check wiring according to wiring diagram - Replace Vehicle Speed Sensor (VSS) -G68- ⇒ page 01-16 , Fig. 6

01-72

Switch to resistance measuring range 2 MΩ					
Test step	**VAG 1598 sockets**	**Test of**	• Test conditions - Additional operations	**Specified value**	**Repairing malfunction**
16	30 + 18	Transmission Fluid Temperature Sensor -G93- (ATF)	• Ignition switched OFF • Transmission Control Module (TCM) -J217- disconnected • Transmission fluid (ATF) temperature: approx. 20 °C (68 °F)	0.247 MΩ	- Check wiring according to wiring diagram - Replace valve body ⇒ page 38-22
			- Switch to 200 KΩ measuring range		
			• Transmission fluid (ATF) temperature: approx. 60 °C (140 °F)	48.8 KΩ	
			approx. 120 °C (248 °F)	7.4 KΩ	

01-73

Electrical testing on Transmission Control Module (TCM) with 68-pin connector

Test requirements, Cautions, notes

⇒ page 01-59

The Transmission Control Module (TCM) -J217- is located under the rear seat.

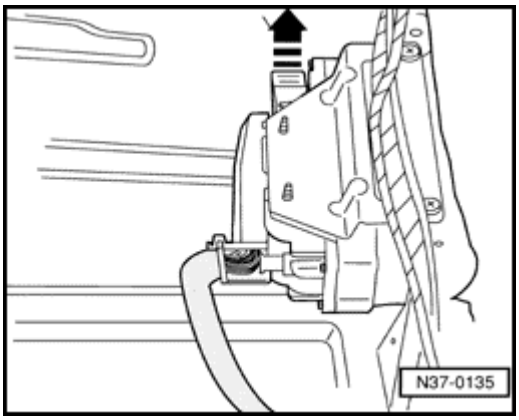

- Switch ignition off, release multi-pin connector lock in direction of -arrow-, then disconnect from control module.

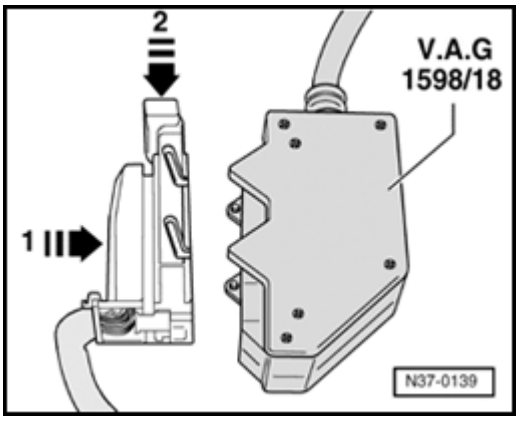

- Connect VAG 1598/18 test box to multi-pin connector -1- and lock, moving in direction of -arrow-.

Wiring to and from the 68-pin TCM connector can be checked according to the wiring diagram using the VAG 1598/18 test box.

01-74

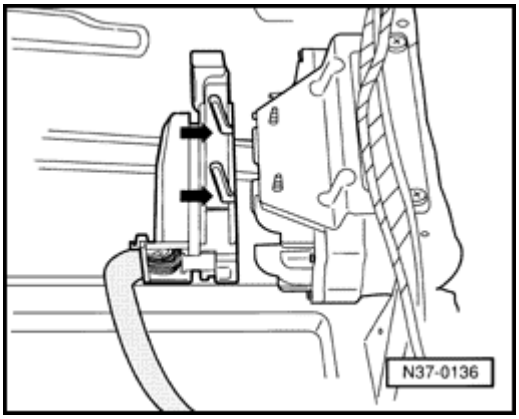

After electrical checks:

- Re-connect multi-pin connector to TCM and lock.

Note:

When re-connecting, make sure that the guides (arrows) are engaged with the TCM pins.

01-75

Terminal assignment for 68-pin Transmission Control Module (TCM) - 217- connector(also sockets on VAG 1598/18 test box)

1- Ground (GND) (terminal 31)

2- Not assigned

3- Not assigned

4- Not assigned

5- Throttle Position (TP) Sensor -G69- [1)]

6- Transmission Fluid Temperature Sensor -G93-

7- Not assigned

8- Not assigned

9- Solenoid Valve 3 -N90-

10- Solenoid Valve 7 -N94-

11- Park/Neutral Position (PNP) signal

12- Kickdown for air conditioner

13- Ignition timing influence

14- Not assigned

15- Brake Light Switch -F- (signal voltage)

16- Kick Down Switch -F8-

17- Not assigned

18- Multi-function Transmission Range (TR) Switch -F125-

19- Engine TD-signal (RPM)

20- Vehicle Speed Sensor -G68-

21- Not assigned

22- Solenoid Valve 6 -N93- (supply voltage)

23- Battery Positive Voltage (B+) (terminal 15)

24- On Board Diagnostic (OBD) K-wire

25- Not assigned

26- Not assigned

27- Not assigned

28- Throttle Position Sensor -G69- Ground (GND)[1)]

29- Shiftlock Solenoid -N110-

30- Not assigned

31- Not assigned

32- Not assigned

33- Not assigned

34- Not assigned

35- Not assigned

36- On Board Diagnostic (OBD) L-wire

[1)] Signal contacts (5 and [28)] and regulated voltage supply contact ([50)] not assigned on vehicles with 6-cylinder engine; Load signal (contact [41)] is directed to Transmission Control Module (TCM) via Motronic Engine Control Module (ECM) and can only be checked using the "Reading measured value block" function of the VAG 1551 Scan Tool (ST) ⇒ page 01-40 .

37- Not assigned	53- Not assigned
38- Not assigned	54- Solenoid Valve 2 -N89-
39- Not assigned (by VW)	55- Solenoid Valve 1 -N88-
40- Multi-function Transmission Range (TR) Switch -F125-	56- Solenoid Valve 5 -N92-
41- Load signal from Motronic Engine Control Module (ECM)	57- Selector lever display
42- Diesel engine RPM sensor (screening)	58- Solenoid Valve 6 -N93-
43- Vehicle Speed Sensor -G68- (screening)	59- Not assigned
44- Not assigned	60- Cruise control system (input, terminal15)
45- Not assigned	61- Cruise control system (output)
46- Not assigned	62- Multi-function Transmission Range (TR) Switch -F125-
47- Solenoid Valve 4 -N91-	63- Multi-function Transmission Range (TR) Switch -F125-
48- Not assigned	64- Engine Speed (RPM) Sensor -G28-
49- Not assigned	65- Vehicle Speed Sensor -G68- (Diesel engine)
50- Throttle Position (TP) Sensor -G69- (5 volts) [1]	66- Not assigned
51- Not assigned	67- Solenoid Valves voltage supply
52- Not assigned	68- Not assigned

[1] Signal contacts (5 and [28]) and regulated voltage supply contact ([50]) not assigned on vehicles with 6-cylinder engine; Load signal (contact [41]) is directed to Transmission Control Module (TCM) via Motronic Engine Control Module (ECM) and can only be checked using the "Reading measured value block" function of the VAG 1551 Scan Tool (ST) ⇒ page 01-40 .

01-77

List of test steps (TCM with 68-pin connector)

Note:

Only carry out test steps as listed in Diagnostic Trouble Code (DTC) table, or referred to while reading measured value block.

Component checked		Component checked	
Battery Positive Voltage (B+) supply from Transmission Control Module (TCM) -J217-	- Carry out test step 1	Solenoid Valve 5 -N92-	- Carry out test step 10
Shiftlock Solenoid -N110-	- Carry out test steps 2 and 13	Solenoid Valve 6 -N93-	- Carry out test step 11
Brake Light Switch -F-	- Carry out test step 3	Solenoid Valve 7 -N94-	- Carry out test step 12
Throttle Position (TP) Sensor -G69-	- Carry out test step 4	Kick Down Switch -F8-	- Carry out test step 14
Multi-Function Transmission Range (TR) Switch -F125-	- Carry out test step 5	Vehicle Speed Sensor -G68-	- Carry out test step 15
Solenoid Valve 1 -N88-	- Carry out test step 6	Transmission Fluid Temperature Sensor -G93-	- Carry out test step 16
Solenoid Valve 2 -N89-	- Carry out test step 7		
Solenoid Valve 3 -N90-	- Carry out test step 8		
Solenoid Valve 4 -N91-	- Carry out test step 9		

01-78

Test table

Switch to voltage measuring range 20 V					
Test step	**VAG 1598/18 sockets**	**Test of**	• Test conditions - Additional operations	**Specified value**	**Repairing malfunction**
1	23 + 1	Supply voltage from Transmission Control Module (TCM) -J217-	• Ignition switched ON	approx. Battery Positive Voltage (B+)	- Check wiring according to wiring diagram - Check wiring from pin 1 to Ground (GND) - Check wiring from pin 23 to terminal 15 central electrics
2	29 + 15	Shiftlock Solenoid -N110-	• Ignition switched ON • Brake pedal NOT depressed	approx. Battery Positive Voltage (B+)	- Check wiring according to wiring diagram - Replace Shiftlock Solenoid -N110- ⇒ Shift mechanism, servicing, page 37-1
			- Depress brake pedal	0.2 V	
3	15 + 1	Brake Light Switch -F-	• Ignition switched ON • Brake pedal NOT depressed	0 V	- Check wiring according to wiring diagram - Replace Brake Light Switch -F- ⇒ *Repair Manual, Suspension, Wheels, Brakes, Steering, Repair Group 47*
			- Depress brake pedal	approx. Battery	

				Positive Voltage (B+)	

Switch to resistance measuring range 20 KΩ					
Test step	**VAG 1598/18 sockets**	**Test of**	• Test conditions - Additional operations	**Specified value**	**Repairing malfunction**
4	5 + 28	Throttle Position (TP) Sensor -G69- [1)]	• Ignition switched OFF		- Check wiring according to wiring diagram When accelerating from idle to Wide Open Throttle, resistance measurement will constantly change - Adjust Throttle Position (TP) Sensor, and replace if necessary ⇒ *Repair Manual, 2.0 Liter Fuel Injection & Ignition or 1.8 Liter Fuel Injection & Ignition, Repair Group 24* - Bring system into basic setting ⇒ page 01-39
			Accelerator Pedal position:		
			Idling		
			- min.	0.7 KΩ	
			- max.	1.8 KΩ	
			Wide Open Throttle		
			- min.	2.1 KΩ	
			- max.	3.9 KΩ	
	5 + 50	Throttle Position (TP) Sensor -G69- [1)]	Accelerator Pedal position:		
			Idling		

			- min.	2.1 KΩ	
			- max.	3.9 KΩ	
			Wide Open Throttle		
			- min.	0.7 KΩ	
			- max.	1.8 KΩ	

1) Engine with Mono Motronic: Engine Coolant Temperature (ECT) min. 80 ° C (176 ° F).

Not checked on vehicles with 6-cylinder engine; Signal from TP Sensor -G69- is directed to TCM via ECM and can only be measured using the "Reading measured value block" function of the VAG 1551 Scan Tool ⇒ page 01-40

01-80

Switch to resistance measuring range 200 Ω					
Test step	**VAG 1598/18 sockets**	**Test of**	• Test conditions - Additional operations	**Specified value**	**Repairing malfunction**
5	63 + 1	Multi-Function Transmission Range (TR) Switch -F125-	- Selector lever positions R, N, D, 3 and 2	infinite Ω 1)	- Check wiring according to wiring diagram - Check connector on Multi-Function TR Switch -F125- for corrosion and replace if necessary - Replace Multi-Function TR Switch -F125- ⇒ page 01-15 , ⇒ 31
			- Selector lever positions P and 1	0.8 to 1 Ω	
	40 + 1		- Selector lever positions P, R, 2 and 1	infinite Ω 1)	
			- Selector lever positions N, D and 3	0.8 to 1 Ω	
	62 + 1		- Selector lever positions P, R, N and D	infinite Ω 1)	
			- Selector lever positions 3, 2 and 1	0.8 to 1 Ω	
	18 + 1		- Switch to voltage measuring range 20 V		
			- Selector lever positions P, R, and N	approx. Battery Positive Voltage (B+)	

			- Selector lever positions D, 3, 2 and 1	0 V	

1) Switch multimeter to largest Ω (ohms) range

01-81

Switch to resistance measuring range 200 Ω					
Test step	**VAG 1598/18 sockets**	**Test of**	• Test conditions - Additional operations	**Specified value**	**Repairing malfunction**
6	55 + 67	Solenoid Valve 1 -N88-	• Ignition switched OFF	55 to 65 Ω	- Check routing of wiring according to wiring diagram - Replace valve body ⇒ page 38-22
	55 + 1			infinite Ω [1]	
7	54 + 67	Solenoid Valve 2 -N89-	• Ignition switched OFF	55 to 65 Ω	- Check routing of wiring according to wiring diagram - Replace valve body ⇒ page 38-22
	54 + 1			infinite Ω [1]	
8	9 + 67	Solenoid Valve 3 -N90-	• Ignition switched OFF	55 to 65 Ω	- Check routing of wiring according to wiring diagram - Replace valve body ⇒ page 38-22
	9 + 1			infinite Ω [1]	
9	47 + 67	Solenoid Valve 4 -N91-	• Ignition switched OFF	55 to 65 Ω	- Check routing of wiring according to wiring diagram - Replace valve body ⇒ page 38-22
	47 + 1			infinite Ω [1]	

[1] Switch multimeter to largest Ω (ohms) range

01-82

Switch to resistance measuring range 200 Ω					
Test step	**VAG 1598/18 sockets**	**Test of**	• Test conditions - Additional operations	**Specified value**	**Repairing malfunction**
10	56 + 67	Solenoid Valve 5 -N92-	• Ignition switched OFF	55 to 65 Ω	- Check routing of wiring according to wiring diagram - Replace valve body ⇒ page 38-22
	56 + 1			infinite Ω [1]	
11	58 + 22	Solenoid Valve 6 -N93-	• Ignition switched OFF	4.5 to 6.5 Ω	- Check routing of wiring according to wiring diagram - Replace valve body ⇒ page 38-22
	58 + 1 22 + 1			infinite Ω [1]	
12	10 + 67	Solenoid Valve 7 -N94-	• Ignition switched OFF	55 to 65 Ω	- Check routing of wiring according to wiring diagram - Replace valve body ⇒ page 38-22
	10 + 1			infinite Ω [1]	
13	23 + 29	Shiftlock Solenoid -N110-	• Ignition switched OFF	14 to 25 Ω	- Check routing of wiring according to wiring diagram - Replace Shiftlock Solenoid -N110- ⇒ Shift mechanism, servicing, page 37-1

[1] Switch multimeter to largest Ω (ohms) range

01-83

Switch to resistance measuring range 200 Ω					
Test step	**VAG 1598/18 sockets**	**Test of**	• Test conditions - Additional operations	**Specified value**	**Repairing malfunction**
14	1 + 16	Kick Down Switch -F8-	• Ignition switched OFF • Accelerator Pedal NOT depressed	infinite Ω [1]	- Check routing of wiring according to wiring diagram - Adjust Accelerator Pedal cable, or replace ⇒ *Repair Manual, 2.0 Liter General, Engine, 1.8 Liter General, Engine or 2.8 Liter VR6 General, Engine, Repair Group 20*
			- Depress Accelerator Pedal as far as kickdown	less than 1.5 Ω	

[1] Switch multimeter to largest Ω (ohms) range

Switch to resistance measuring range 20 KΩ					
Test step	**VAG 1598/18 sockets**	**Test of**	• Test conditions - Additional operations	**Specified value**	**Repairing malfunction**
15	20 + 65	Vehicle Speed Sensor (VSS) -G68-	• Ignition switched OFF		- Check wiring according to wiring diagram - Replace Vehicle Speed Sensor (VSS) -G68- ⇒ page 01-16 , ⇒ 32
			min.	0.8 KΩ	
			max.	0.9 KΩ	

01-84

Switch to resistance measuring range 2 MΩ					
Test step	**VAG 1598/18 sockets**	**Test of**	• Test conditions - Additional operations	**Specified value**	**Repairing malfunction**
16	6 + 67	Transmission Fluid Temperature Sensor - G93- (ATF)	• Ignition switched OFF • Transmission fluid (ATF) temperature approx. 20 °C (68 °F)	0.247 MΩ	- Check wiring according to wiring diagram - Replace valve body ⇒ page 38-22
			- Switch to 200 KΩ measuring range		
			approx. 60 °C (140 °F)	48.8 KΩ	
			approx. 120 °C (248 °F)	7.4 KΩ	

Torque converter

The ATF pump is driven via the torque converter.

When installing the torque converter, make sure that both drive pins engage in the recesses in the ATF pump inner wheel.

Torque converter, identifying

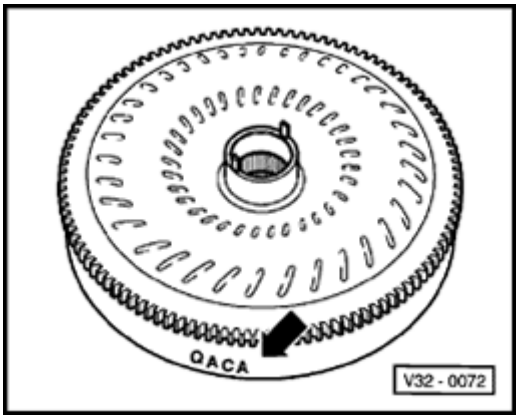

- There are various torque converters. They are identified by code letters -arrow-.

  Transmission/torque converter applications ⇒ tables starting page 00-3

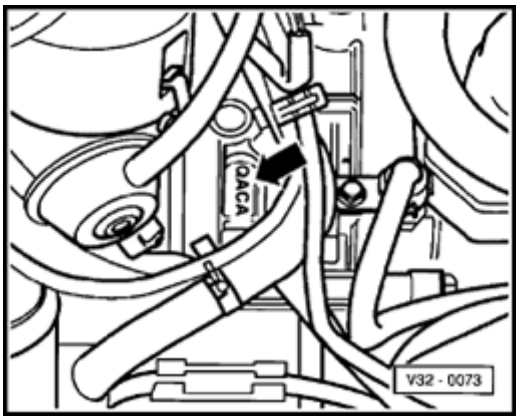

- **Torque converter code letters**

  (Transmission installed)

32-3

Torque converter, draining

If the torque converter has become contaminated by particles resulting from wear or abrasion, or when carrying out a major overhaul of the transmission, drain the torque converter as follows:

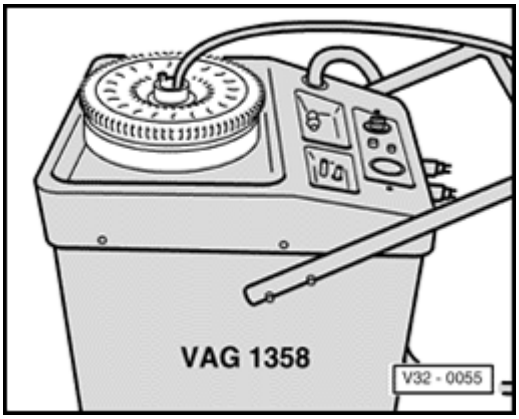

- Extract automatic transmission fluid (ATF) from torque converter using VAG 1358A with VAG 1358 A/1 probe, or EZ1 fluid evacuator.

32-4

Torque converter oil seal, removing and installing

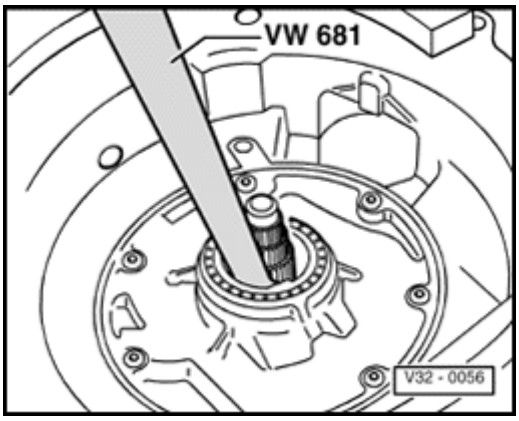

Removing torque converter oil seal

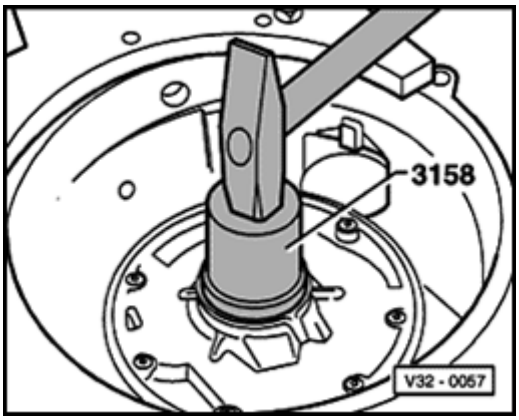

Installing torque converter oil seal

- Drive in seal until flush.

Shift mechanism, servicing

CAUTION!

Before working on the engine when it is running, move the transmission selector lever into the P position and apply the parking brake.

Shift mechanism, checking

Selector lever in P position ignition switched ON

- Brake pedal not depressed:

  Selector lever is locked and cannot be shifted out of "P" position. Shiftlock Solenoid -N110- blocks selector lever.

- Brake pedal depressed:

  Shiftlock Solenoid -N110- releases selector lever. It is now possible to shift into a driving gear.

37-2

Selector lever in N position and ignition switched ON:

- Brake pedal not depressed:

  Selector lever is locked and cannot be shifted out of "N" position. Shiftlock Solenoid -N110- blocks selector lever.

- Brake pedal depressed:

  Shiftlock Solenoid -N110- releases selector lever. It is possible to shift into a driving gear.

Note:

- *The starter must not be able to operate with the selector lever in positions 1, 2, 3, D and R.*

- *When travelling at speeds above 5 km/h (3 mph) and shifting into selector lever position N the Shiftlock Solenoid -N110- must not engage and block the selector lever. The selector lever can be shifted into a driving gear.*

- *When travelling at speeds below 5 km/h (3 mph) (almost stopped) and shifting into selector lever position N , the Shiftlock Solenoid -N110- must not engage until after approx. 1 second. The selector lever cannot be shifted out of the N position until the brake pedal is depressed.*

37-3

Selector lever cable, checking and adjusting

Checking

- Remove selector lever cable combi-bolt from lever/selector shaft.

- Move selector lever from "P" to "1."

  - Shift mechanism and selector lever cable must move freely. If necessary replace selector lever cable or service shift mechanism.

Always replace selector lever locking washer at transmission lever after dismantling.

Adjusting

- Selector lever in "P" position

- Loosen selector lever cable combi-bolt on selector shaft lever.

- Bring selector shaft lever into position "P" on transmission. Locking lever must engage in park lock wheel, both front wheels locked.

- In this position tighten selector shaft lever combi-bolt.

  - Tightening torque: 25 Nm (18 ft lb)

Ignition lock, checking

- Shift selector lever to "P" position and turn ignition key to end ("OFF") position.

  - It must only be possible to remove ignition key with selector lever in "P" position.

- Remove ignition key. Selector lever cannot be shifted out of "P" position.

37-5

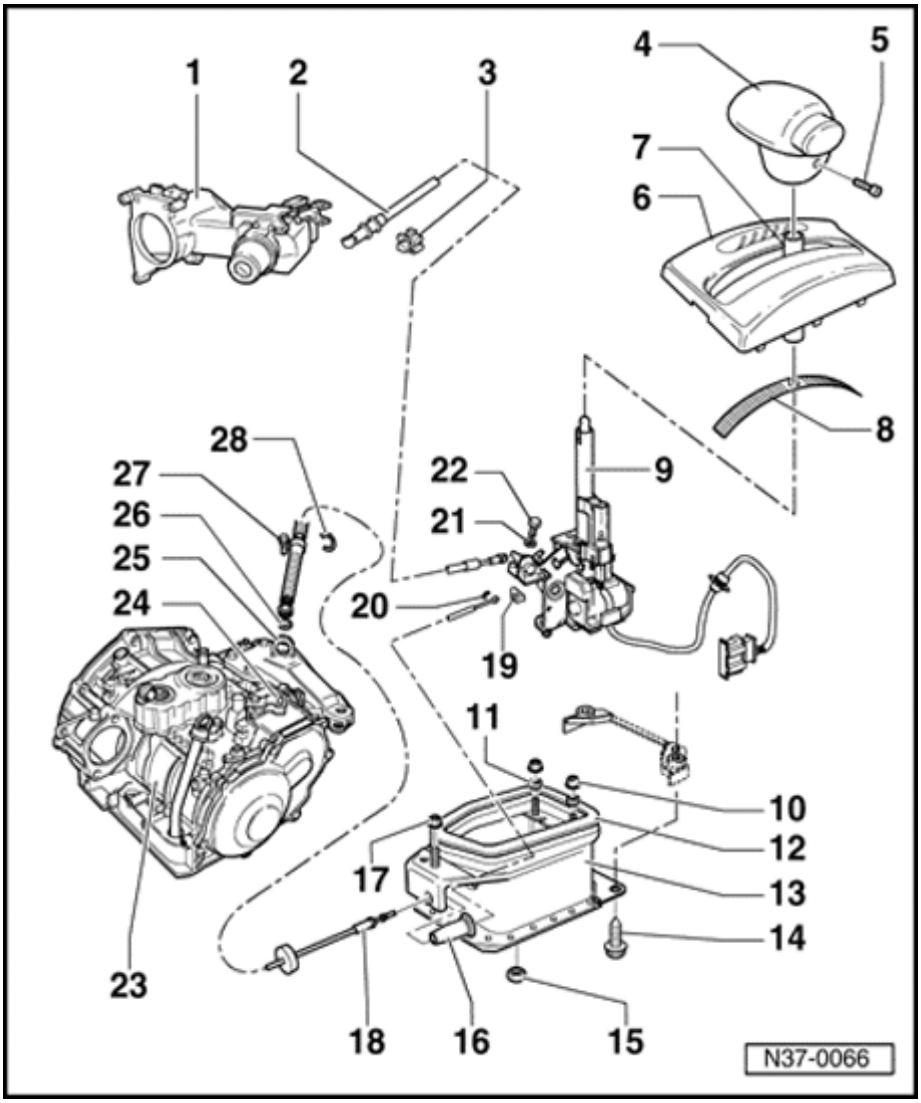

Shift mechanism, disassembling and assembling

1 - Ignition/Starter Switch -D-

2 - Locking cable

- Must not be kinked
- Adjusting ⇒ page 37-25
- Removing and installing ⇒ page 37-21

3 - Clip

- For securing locking cable
- Always replace

4 - Selector lever handle

5 - Set screw

- Tightening torque: 1.5 Nm (13 in lb)

6 - Cover

- With selector indicator

7 - Protective sleeve

- For selector lever

8 - Cover strip

- Insert in cover - 6 -

37-6

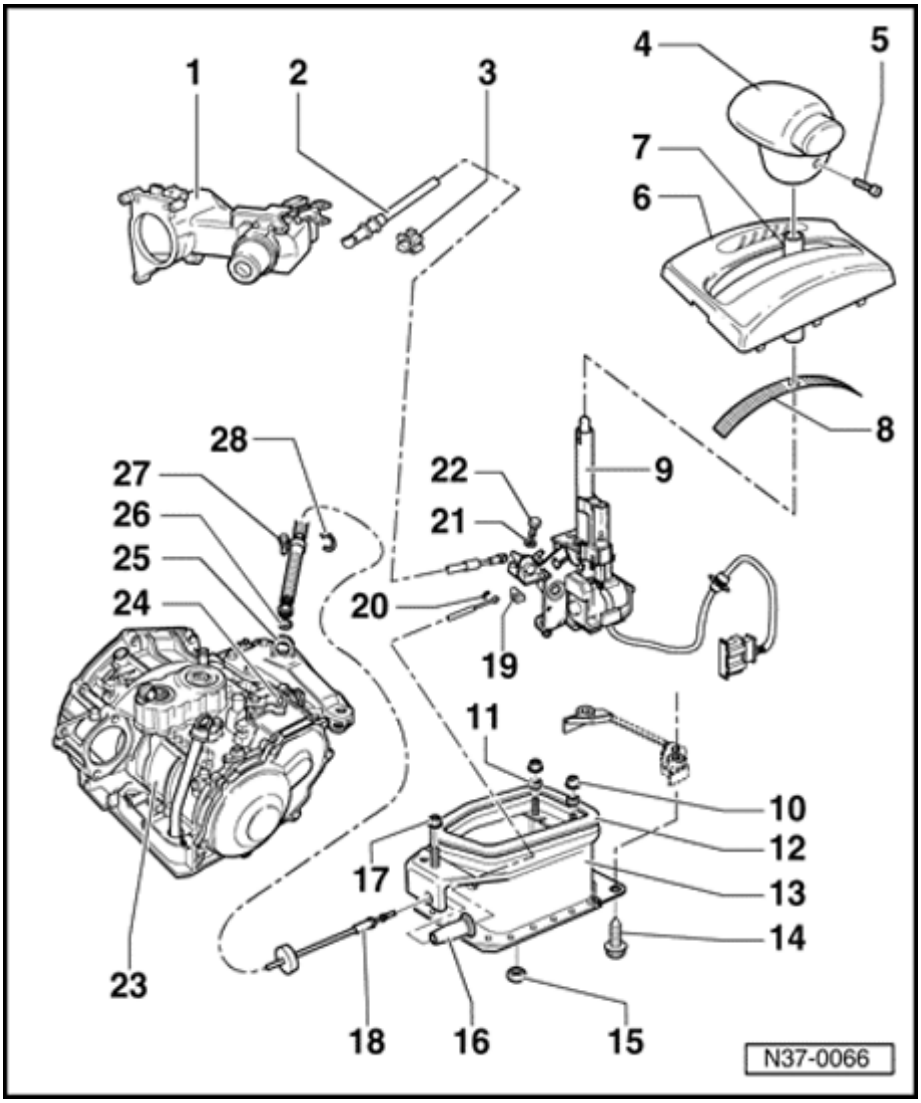

9 - Selector lever

- Disassembling and assembling ⇒ page 37-13
- To remove selector lever, lower protective plate is removed and front protective plate is removed and pushed forward
- When installing selector lever, insert locking cable anchor in notch of selector lever housing
- Securing wiring harness to selector lever housing (Shiftlock Solenoid with single wiring harness) ⇒ Fig. 2

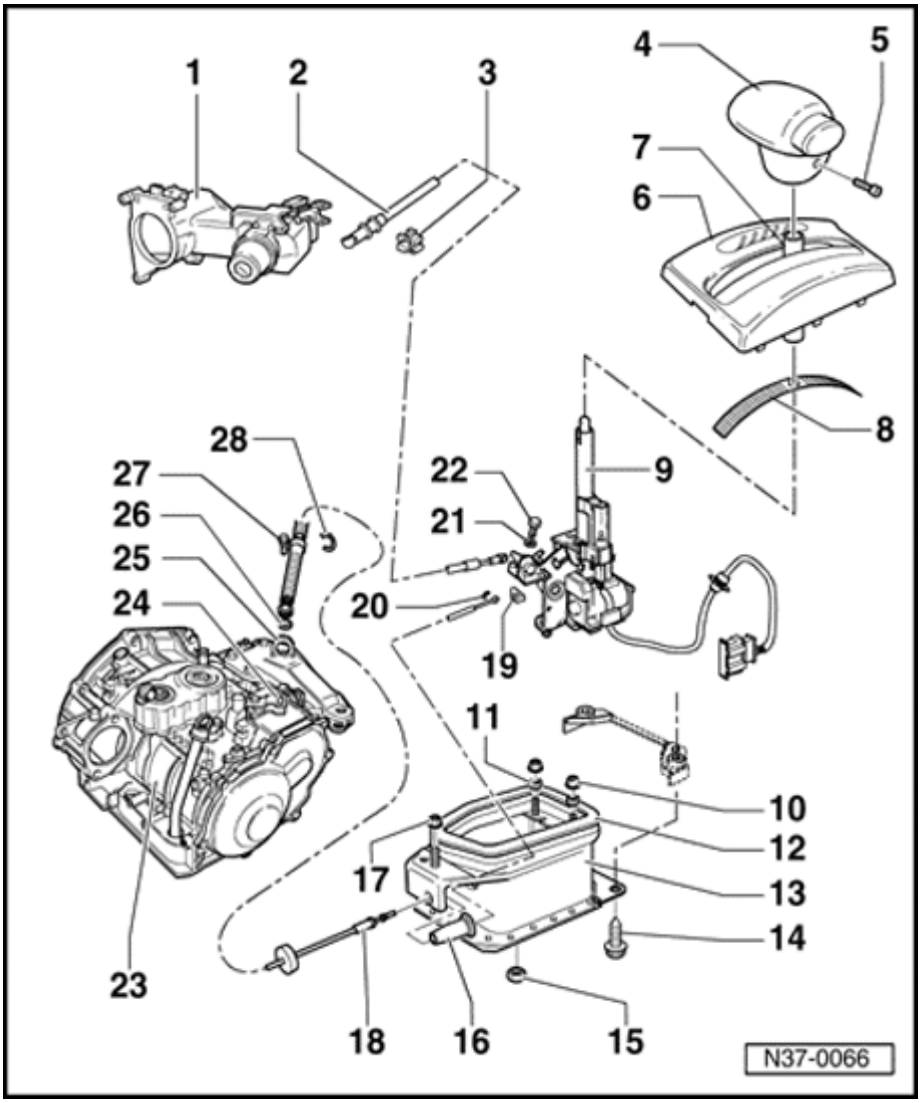

10 - Nuts

- To secure center console

11 - Spacer

12 - Gasket

- Always replace

13 - Selector lever housing

- Need not be removed to replace selector lever cable or individual parts of shift mechanism
- Removing and installing ⇒ Fig. 1

14 - Screw

- Tightening torque: 25 Nm (18 ft lb)

37-8

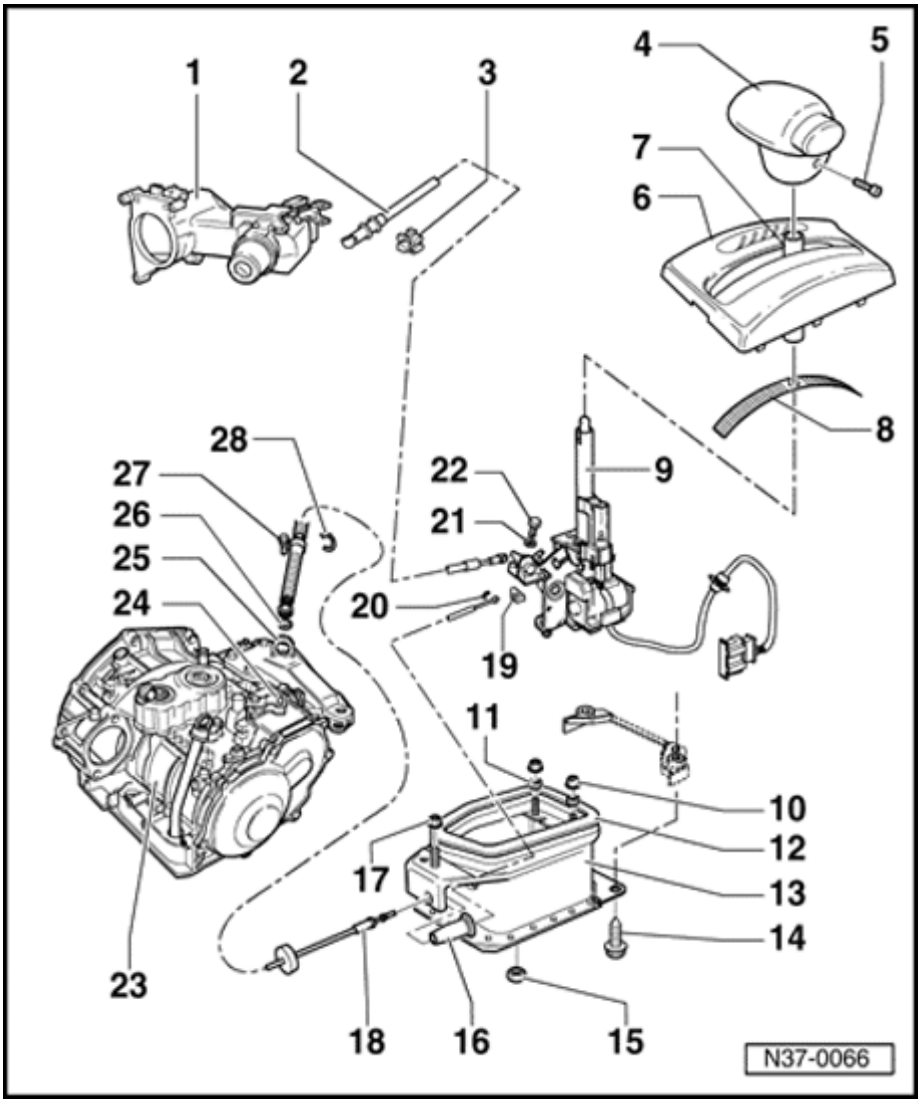

15 - Nut

- Tightening torque: 15 Nm (11 ft lb)
- Always replace
- Qty. 3

16 - Protective sleeve

- Insert into selector lever housing before attaching selector lever cable

17 - Hex nut

- With shoulder
- Tightening torque: 25 Nm (18 ft lb)

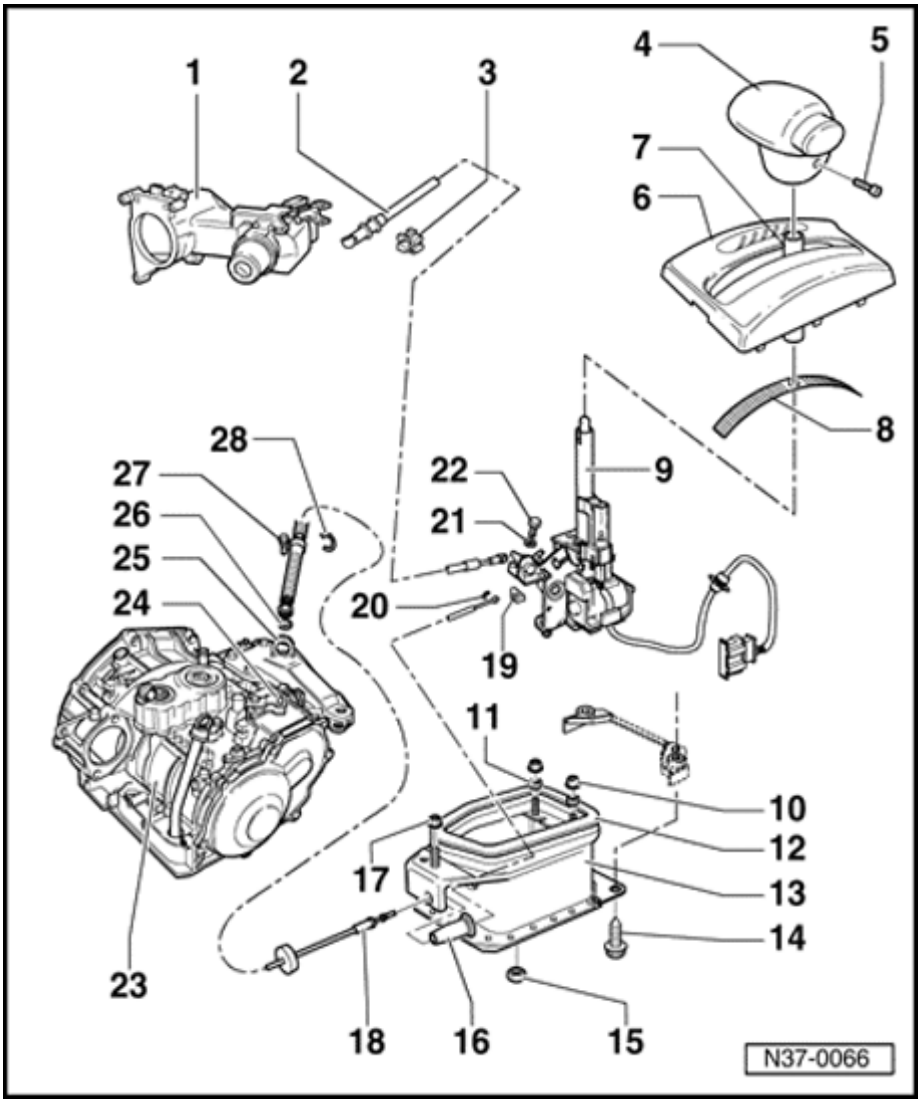

18 - Selector lever cable

- To remove selector lever, lower protective plate is removed, exhaust system is separated in front of Three Way Catalytic Converter (TWC) and front protective plate removed (vehicles with 6-cyl. engine: remove TWC)
- Do not bend or kink
- Lightly grease cable eye and cable ends before installing
- Tighten selector lever cable on cable anchor/selector lever housing to 20 Nm (15 ft lb)
- Check guide tube for tight fit
- Check protective sleeve between console and lever/gearshift shaft for proper seating and secure selector lever cable with corrugated locking element -28-
- Attach selector lever cable to selector lever ⇒ Fig. 3
- Adjusting ⇒ page 37-3

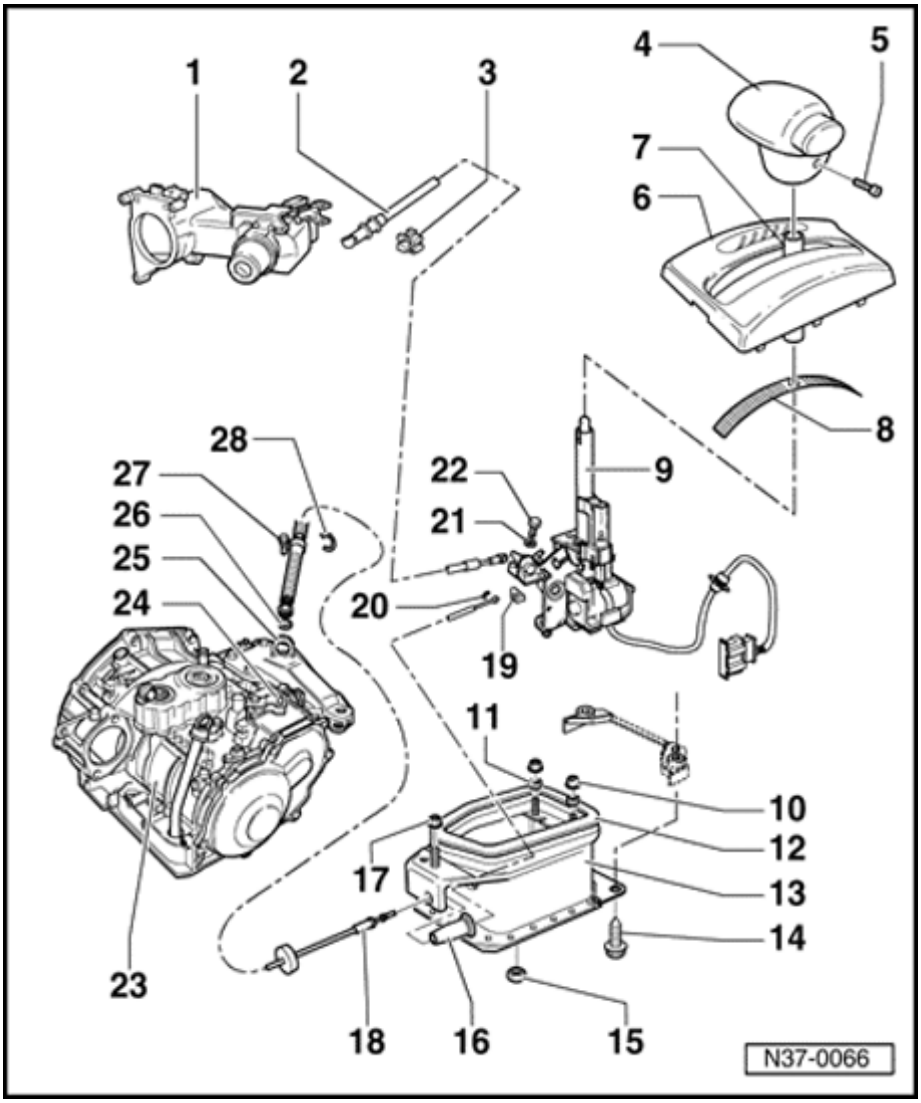

19 - Seal

- Bonded to cable anchor
- Replace if damaged

20 - Circlip

- Install after installing selector lever cable ⇒ Fig. 3

21 - Washer

22 - Bolt

23 - Transmission

24 - Lever

- For selector shaft

25 - Bracket

- With cable anchor for selector lever cable

26 - Washer

27 - Combi-bolt

- Tightening torque: 25 Nm (18 ft lb)

28 - Corrugated locking element

- For selector lever cable
- Always replace

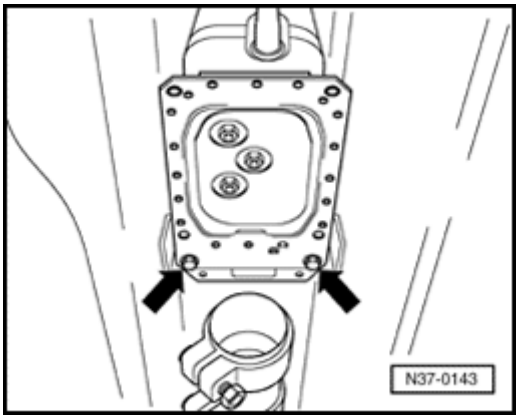

Fig. 1 Removing and installing selector lever housing

- Remove rear center console.
- Remove hex nut with shoulder.
- Remove lower protective plate.
- Disconnect Oxygen Sensor connector, separate exhaust system in front of Three Way Catalytic Converter (TWC).

Note:

On vehicles with 6-cyl. engine, remove the Three Way Catalytic Converter (TWC) completely.

- Remove front protective plate and rear lower bolts (arrows).

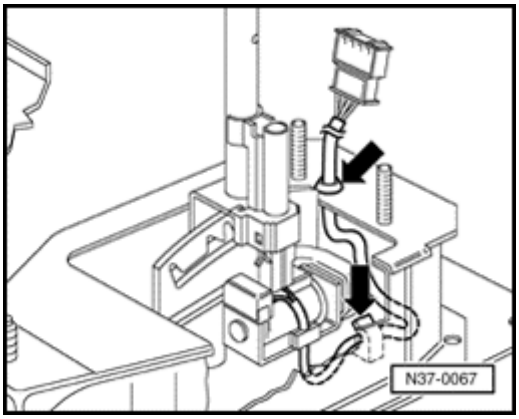

Fig. 2 Mounting wiring harness to selector lever housing

- Press wiring harness into clips and into selector lever housing (arrows).

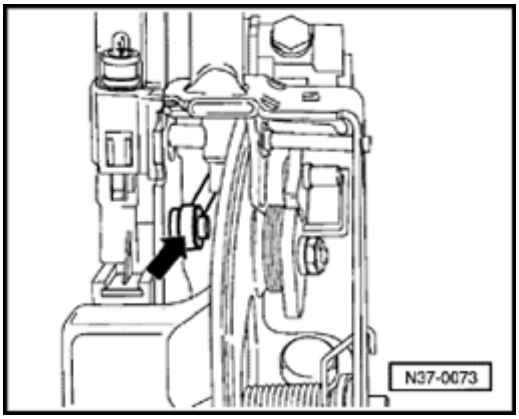

Fig. 3 Attaching selector lever cable to selector lever

- Fit selector lever cable eye (arrow) onto selector lever and secure with circlip.

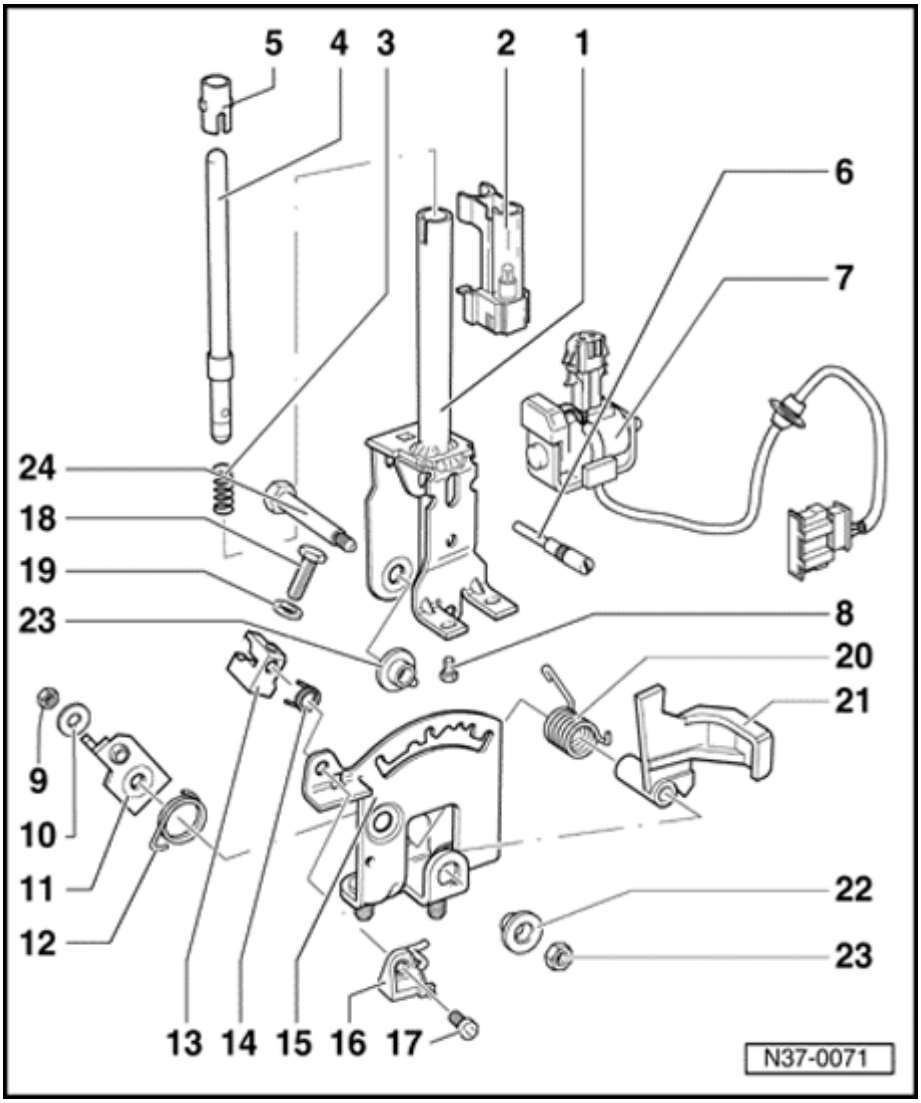

Selector lever, disassembling and assembling

Note:

Selector lever must be removed to replace individual parts ⇒ page 37-6 , item - 9 -.

1 - Selector lever

- Assembling ⇒ Fig. 1

2 - Indicator lighting

- Mounting indicator lighting connector ⇒ Fig. 4

3 - Spring

4 - Push rod

- Grease in area of sliding surfaces

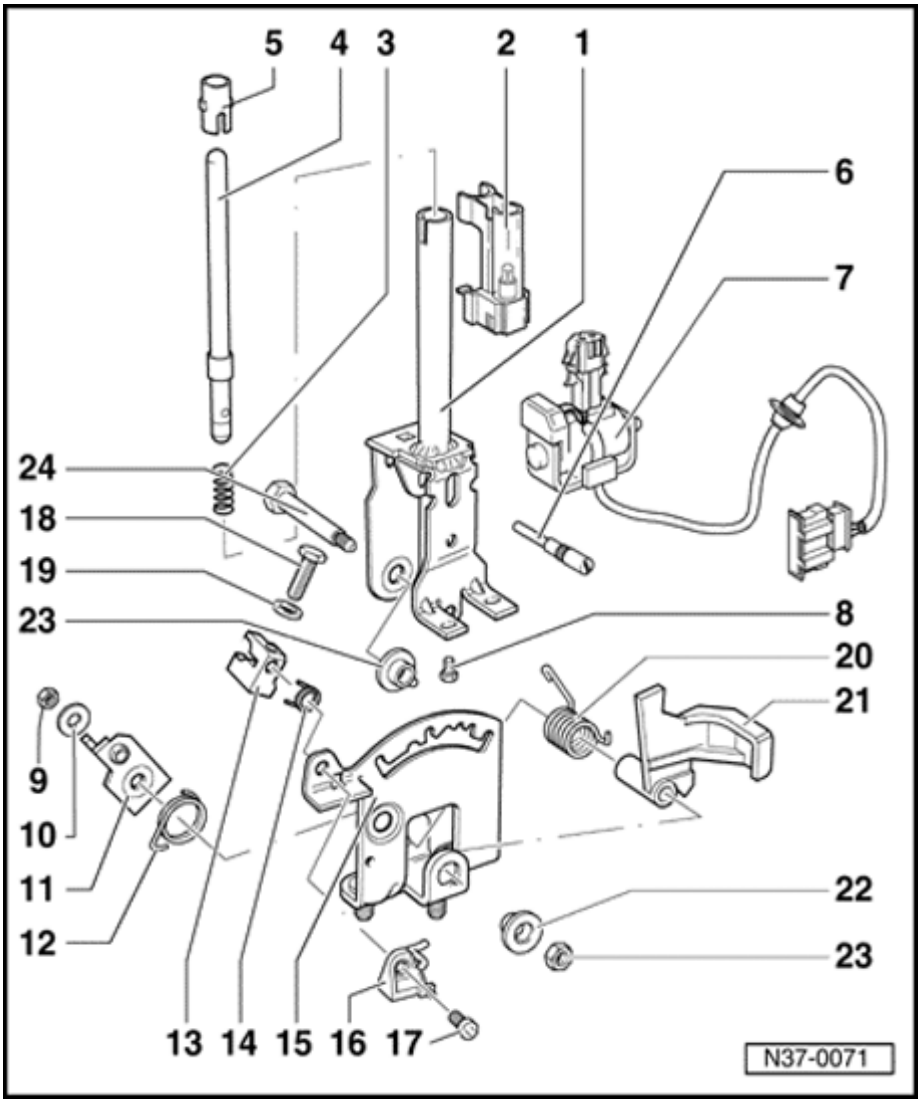

5 - Guide sleeve

- Fit after installing push rod

6 - Set screw

- Always replace
- To remove, first remove Shiftlock Solenoid and indicator lighting -2-. Clamp set screw in vice and loosen by turning selector lever
- Install with thread-locking fluid AMV185 101 A1

7 - Shiftlock Solenoid - N110-

- Adjusting ⇒ Fig. 2
- Functional check ⇒ Fig. 3
- Can be checked by On Board Diagnostic (OBD) program ⇒ page 01-20

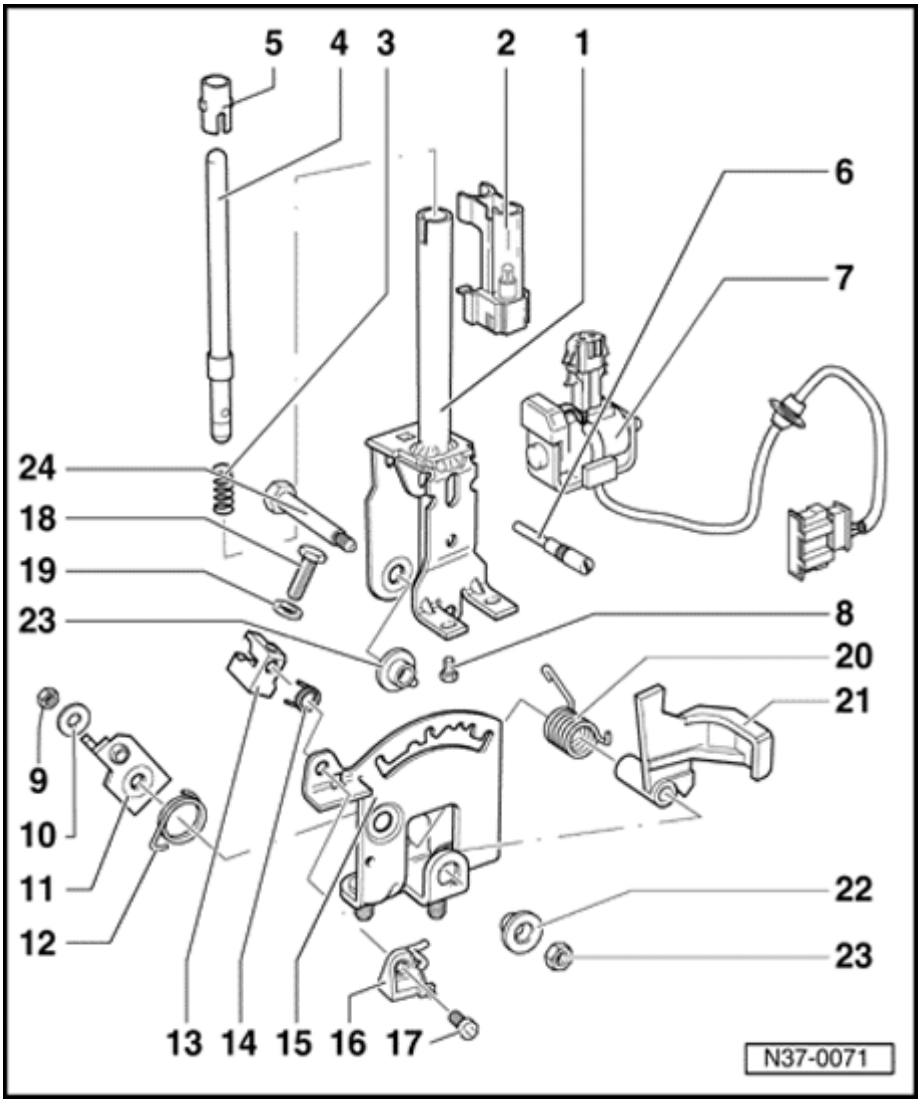

8 - Screw

- Tightening torque: 3 Nm (27 in lb)
- Qty. 2
- Install with thread-locking fluid AMV185 101 A1

9 - Nut

- Tightening torque: 5 Nm (44 in lb)
- Always replace

10 - Washer

11 - Locking lever

- For ignition lock
- Adjust together with locking cable ⇒ page 37-25

12 - Spring

- Hook into hole of detent plate

13 - Retainer

- For locking cable
- Removing and installing locking cable ⇒ page 37-21
- Adjusting locking cable ⇒ page 37-25

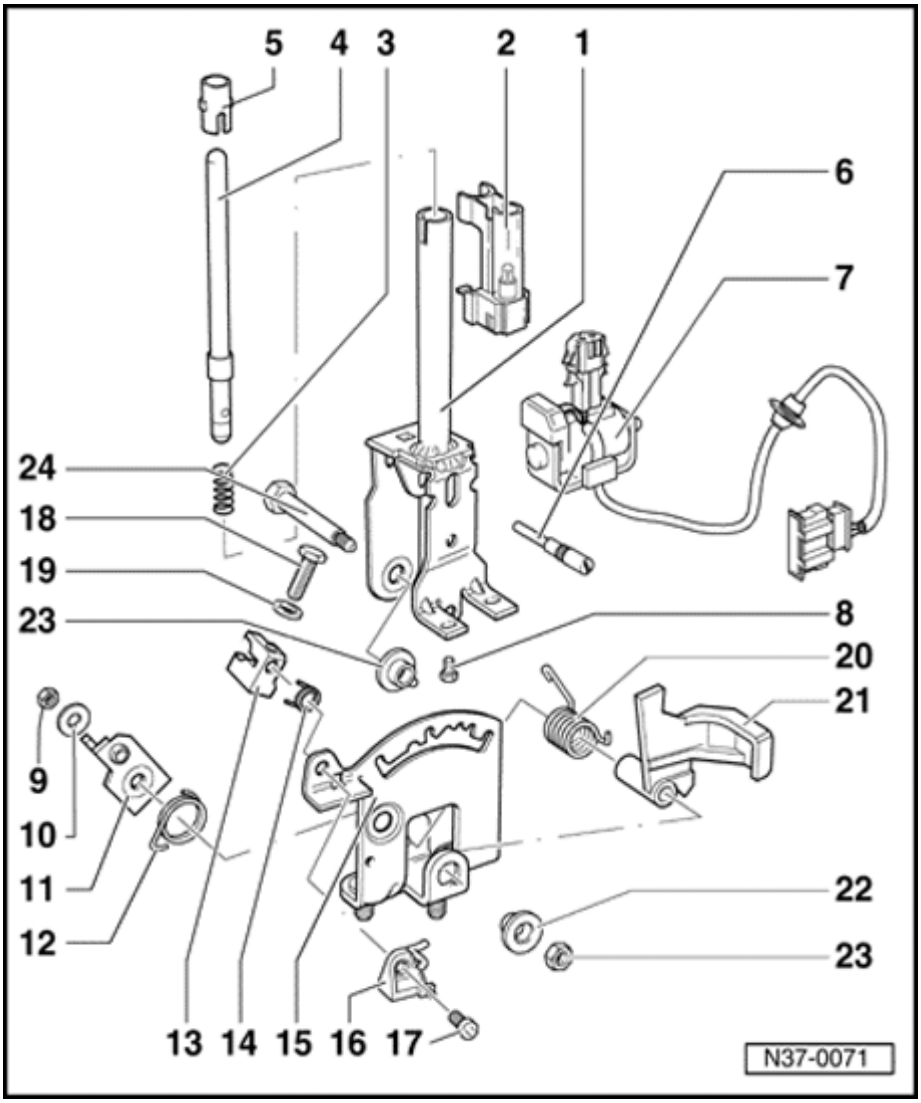

14 - Spring

- For locking pin

15 - Detent plate

- Assemble selector lever before fitting in selector lever housing ⇒ Fig. 1

16 - Locking pin

- With bracket

17 - Socket-head screw

- Tightening torque: 6 Nm (53 in lb)

18 - Screw

- Tightening torque: 6 Nm (53 in lb)

19 - Washer

20 - Spring

- Insert in selector lever together with lever - 21 -

37-17

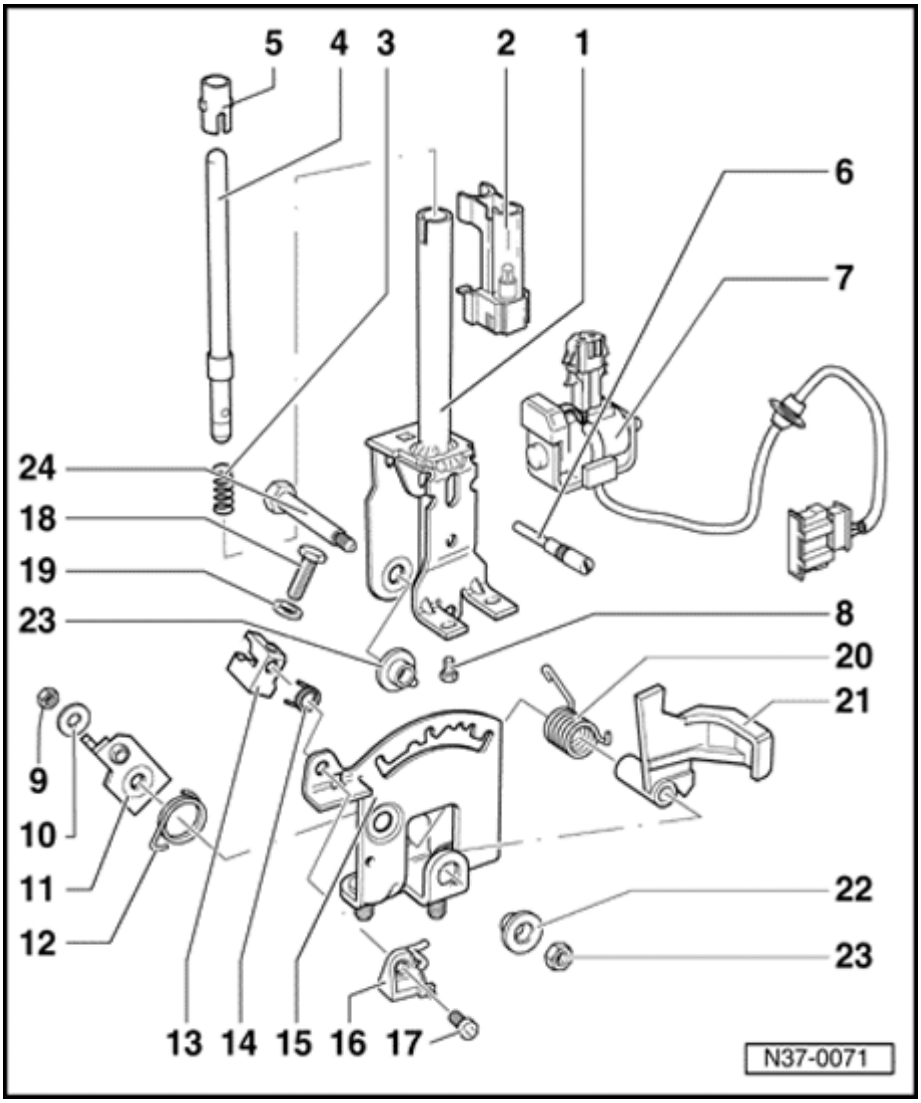

21 - Lever

- For locking in selector lever position "N" or "P"
- Adjusting ⇒ Fig. 2

22 - Bushing

23 - Nut

- Tightening torque: 10 Nm (7 ft lb)
- Always replace

24 - Combi-bolt

- Grease shank

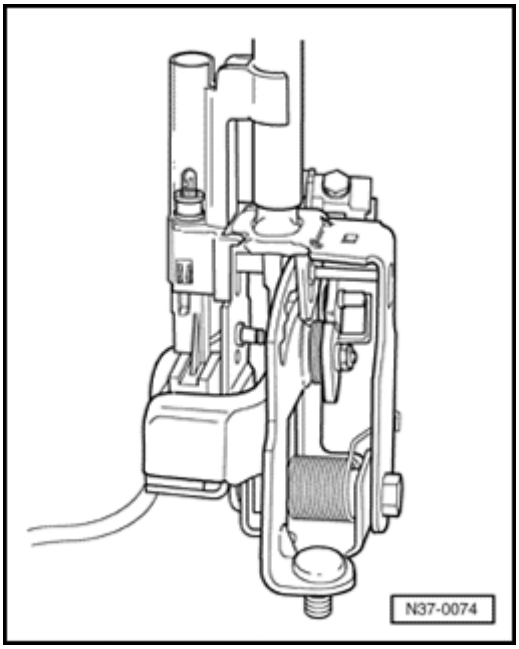

Fig. 1 Assembling selector lever before installing

Adjust Shiftlock Solenoid -N110- (⇒ Fig. 2) and carry out functional check (⇒ Fig. 3) before installing selector lever in selector lever housing.

- Install set screw and Shiftlock Solenoid -N110- mounting screws with thread-locking fluid AMV 185 101 A1.

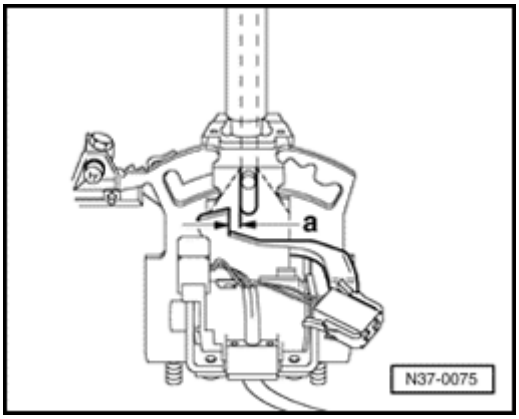

Fig. 2 Adjusting Shiftlock Solenoid -N110-

- Adjust solenoid by sliding in elongated holes until correct clearance -a- exists between push rod and lever ⇒ Fig. 3 .

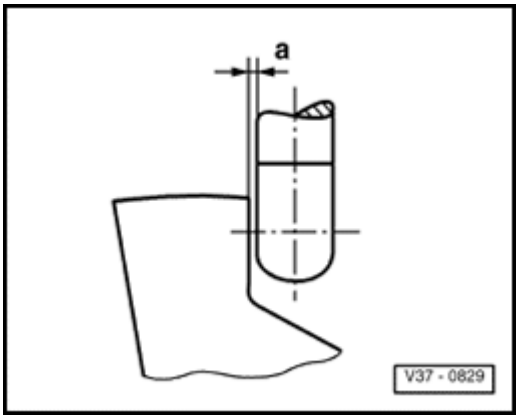

Fig. 3 Adjusting clearance between push rod and lever

Dimension -a- = 0.3 mm (0.019 in.)

Functional check

- Shift selector lever into position "P" and supply Shiftlock Solenoid -N110- with 12 Volts.
  - ♦ It must not be possible to shift selector lever into a driving gear.
- Interrupt solenoid operation.
  - ♦ It must now be possible to shift into driving gears.
  - ♦ Push rod must not catch on lever.
- Shift selector lever into "N" and check as in "P."
- After adjusting clearance, install assembled selector lever.

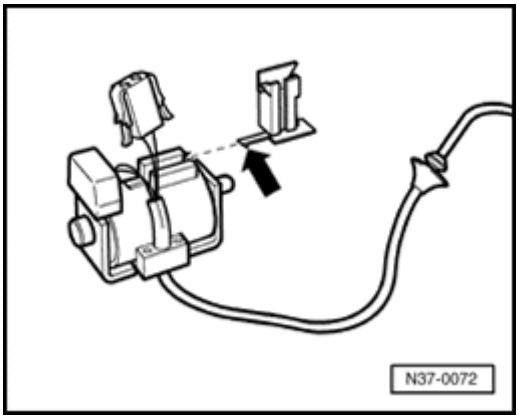

Fig. 4 Mounting indicator lighting connector

(Shiftlock Solenoid with single wiring harness)

- Push bracket with lug (arrow) on until lug engages.
- Seat connector cable into bracket and slide connector onto bracket.

Locking cable, removing and installing

Note:

- *Locking cable must not be kinked.*
- *Adjust locking cable after installing* ⇒ *page 37-25* .

Removing

- Remove selector lever handle.
- Remove cover with cover strip.
- Remove center console.

⇒ *Repair Manual, Body-Exterior, Body-Interior, Repair Group 70.*

- Loosen cable anchor screw, take locking cable out of locking lever and pull out of cable anchor.

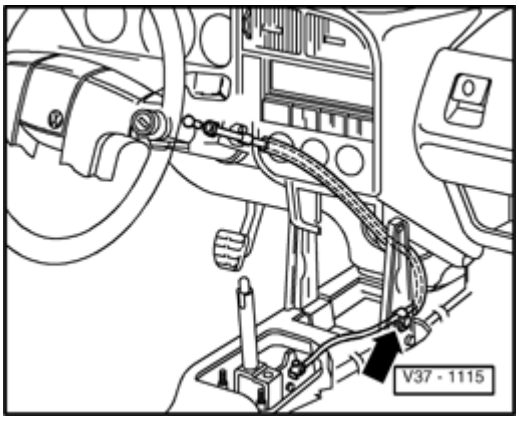

- Remove locking cable from clip (arrow).
- Remove trim pieces from ignition/starter switch.
- Press locking cable clip out of ignition/starter switch and remove locking cable from ball head.
- Take out locking cable.

Installing

Note:

Ensure proper routing of locking cable when installing.

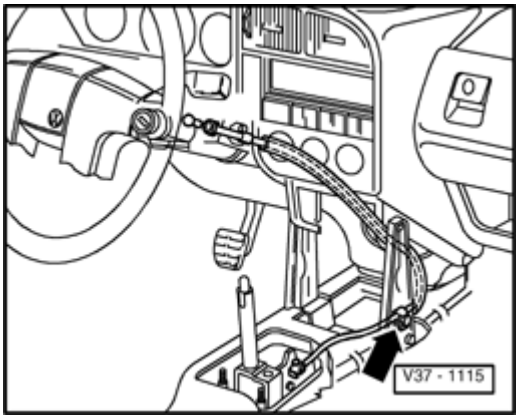

- Install locking cable in vehicle.

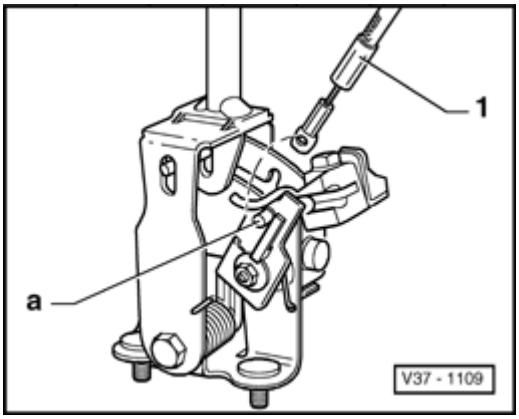

- Mount locking cable eye -1- on locking lever -a-.

37-23

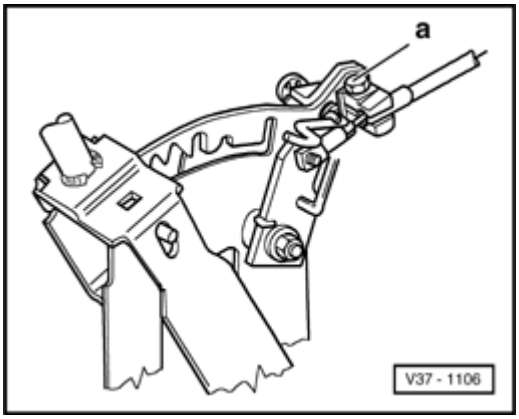

- Install locking cable in cable anchor.
- Do not tighten screw -a- until after adjusting locking cable.

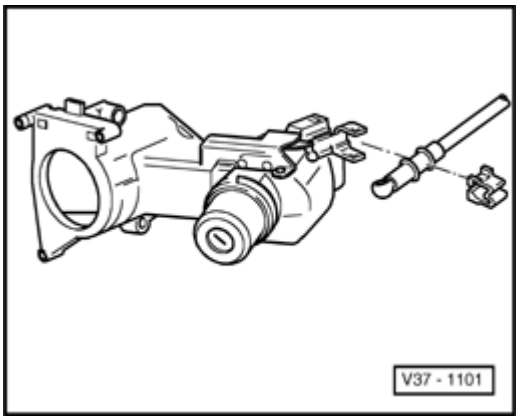

- Mount locking cable clip on locking cable first.
- Press locking cable onto ball head.
- Press locking cable with clip into support bracket for Ignition/Starter Switch.

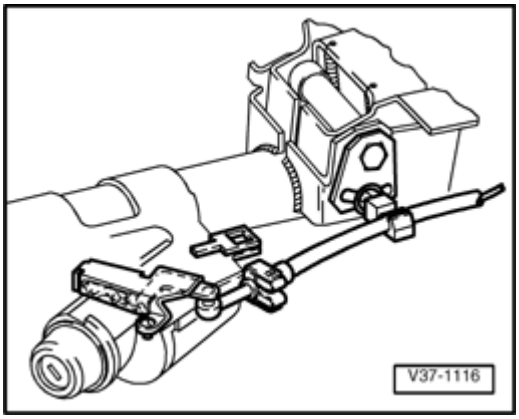

- Route locking cable along steering column.
- Adjust locking cable on cable anchorage of selector lever ⇒ page 37-25 .
- Install center console.
- Install cover with indicator and selector lever handle.
- Attach trim for Ignition/Starter Switch.

Locking cable, adjusting

Note:

Locking cable must only be adjusted in its installation position.

- Shift selector lever into "1" position.

- Turn ignition key to right ("START" position) and release.

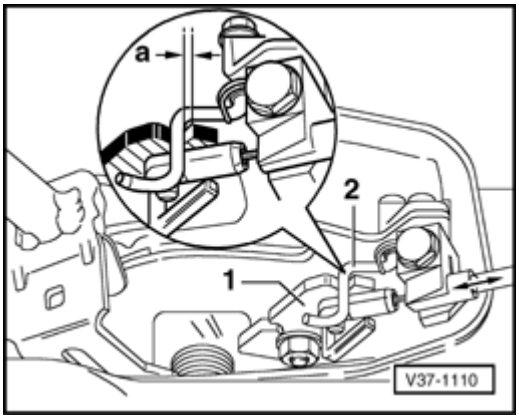

- Adjust clearance -a- between lever -1- and locking pin -2- by sliding locking cable casing.
  - ♦ Dimension -a- = 0.7 mm (0.028 in.)
- Tighten locking cable anchorage screw in this position.
  - ♦ Tightening torque: 6 Nm (53 in lb).
- Shift selector lever into "P" position and turn ignition key to end ("OFF") position.
- Remove ignition key.
  - It must only be possible to remove ignition key with selector lever in "P" position.
  - It must not be possible for selector lever to be shifted out of "P" position.

Transmission, checking

Shift points, checking

⇒ Checking shift points, page 37-27

Stall speed, checking

⇒ Measuring stall speed, page 37-30

Main pressure, measuring

⇒ Measuring main pressure, page 37-32

Shift points, checking

Test requirements

- Carry out On Board Diagnostic program

⇒ *Repair Group 01*

- Diagnostic Trouble Code (DTC) Memory interrogated

- System in basic setting

- Check transmission fluid (ATF) level

⇒ Page 37-43

- Check engine settings

⇒ *Repair Manual for the appropriate engine, Fuel Injection & Ignition, Repair Group 24*

Transmission shifts too early or too late into the next gear

When checking the shift points one should note that the Speedometer can deviate from the specified figure within the permissible tolerance.

In the tables, the gear shifts are listed according to transmission code letters.

H = Hydraulic shift

M = Mechanical shift

The electronic program switch is built into the Transmission Control Module (TCM). The "ECO" or "Sport" program will be automatically selected by the TCM according to the speed at which the Accelerator Pedal is depressed.

For transmissions with the electronic program switch only kick down shift points are given.

To check the shift points connect VAG 1551 Scan Tool (ST).

⇒ *Repair Group 01, Reading measured value block.*

Shift points (with electronic program switch in TCM)

Transmission code letters	Gearshifts	Kickdown
		km/h (mph)
CFF 128 kW (172 hp) engine	1 H - 2 H 2 H - 3 H 3 H - 4 M 4 M - 3 H 3 H - 2 H 2 H - 1 H	61 - 67 (38 - 42) 122 - 128 (76 - 80) 176 - 182 (109 - 113) 178 - 172 (111 - 107) 119 - 113 (74 - 70) 50 - 44 (31 - 27)
CNK 85 kW (115 hp) engine	1 H - 2 H 2 H - 3 H 3 H - 4 M 4 M - 3 H 3 H - 2 H 2 H - 1 H	51 - 57 (32 - 35) 99 - 107 (62 - 66) 144 - 153 (89 - 95) 147 - 140 (91 - 87) 98 - 92 (61 - 57) 46 - 40 (29 - 25)

37-30

Stall speed, checking

- Connect tachometer (e.g. VAG 1367 engine tester), or read Engine Speed (RPM) using VAG 1551 Scan Tool (ST) to read measured value block.

- Hold vehicle stationary with parking brake and foot brake.

- Start engine and place selector lever in "D" position.

- Increase Engine Speed (RPM) briefly (max. 5 seconds). When doing this the stall speed listed in the table must be attained. If necessary, repeat test after 20 seconds.

- If the final specified stall speed is not attained, the following malfunctions are probable causes:

Symptom	Probable cause
Stall speed too high:	Forward clutch slipping, free-wheel slipping
Stall speed up to 200 rpm too low:	Check engine settings
Stall speed more than 200 rpm too low:	Torque converter malfunctioning

In cases of doubt, the engine settings must always be checked first and, if necessary, corrected.

The transmission must always have the correct torque converter installed.

37-31

Stall speed chart

Transmission code letters Automatic transmission 096	Torque converter Code letters	Stall speed RPM
CFF	QCCR	2350 - 2650
CNK	QACA	2750 - 3050

37-32

Main pressure, checking

- Before checking the main pressure, check the Diagnostic Trouble Code (DTC) Memory and, if necessary, repair electrical malfunctions.

- Check DTC Memory

⇒ *Repair Group 01, On Board Diagnostic*

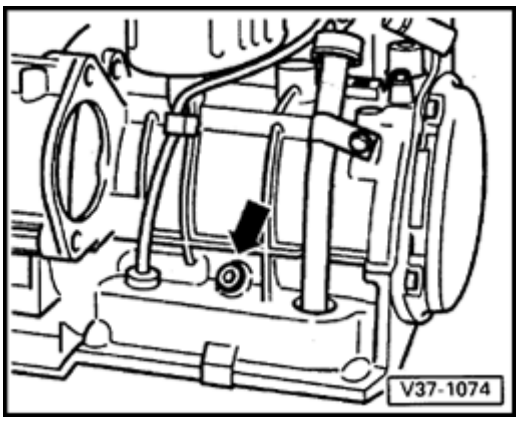

Pressure gauge connection for automatic transmission 096 (arrow)

- Remove main pressure drilling plug.
  - ♦ Always replace main pressure drilling plug
- Connect pressure gauge VAG 1702 and tighten knurled screw.
- Bleed pressure gauge VAG 1702 line by loosening knurled screw with engine running.

CAUTION!

Tighten the knurled screw again after bleeding.

- Bring automatic transmission fluid (ATF) temperature to 60 ° C (140 ° F); to do this connect VAG 1551 Scan Tool (ST) and read temperature in measured value block.

37-33

Main pressure specifications:

- If possible, carry out the main pressure test on a chassis dynamometer (rolling road).

Automatic transmission	Selector lever positions and test conditions			
096			Solenoid Valve connector pulled off 1)	
	D	R	D	R
	Idle	Idle	Engine Speed (RPM) approx. 2000 RPM	Engine Speed (RPM) approx. 2000 RPM
Main pressure - bar (psi)	3.4-3.8 (49-55)	6.5-7.5 (94-109)	10.1-11.3 (146-164)	23.0-24.0 (334-348)

1) After reconnecting the Solenoid Valve connector, check and erase DTC Memory.

⇒ *Repair Group 01, On Board Diagnostic*

If main pressure deviates from specified values, the following are possible causes and recommended remedies:

Possible cause	Remedy
Idle speed too high	Adjust
ATF pump malfunctioning	Check ATF pump replace if necessary
Control valve sticking in valve body	Replace valve body

Transmission, removing and installing

Removing

- Obtain radio code on vehicles with coded radio.

- Disconnect battery Ground (GND) strap.

  - Remove battery on vehicles with 6-cylinder engines.

- Disconnect speedometer connector at transmission.

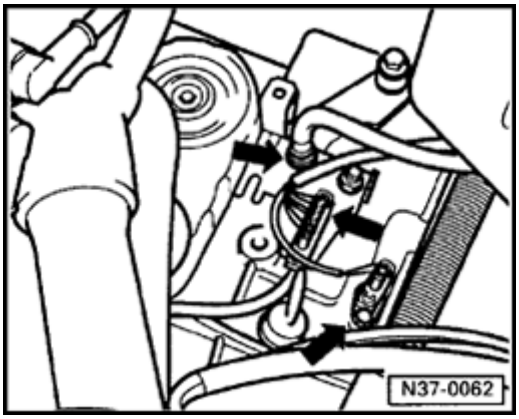

- Remove electrical connections (arrows) at transmission.
- Move selector lever to "P" and disconnect selector lever cable from lever/selector shaft.
- Remove selector lever cable anchor circlip and remove selector lever cable.

37-35

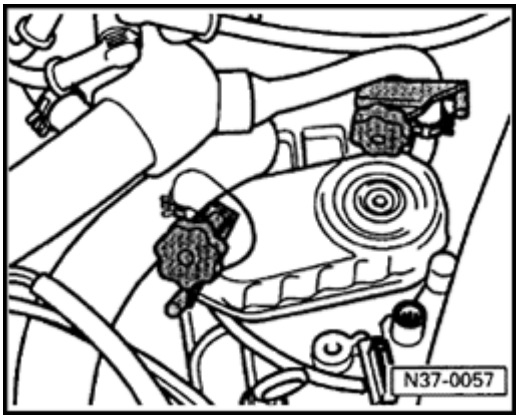

- Clamp-off ATF cooler hoses with 3094 or equivalent and disconnect hoses at ATF cooler.
- Disconnect harness connector for Coolant Fan.
- Remove upper engine/transmission mounting bolts.
- Remove Starter.

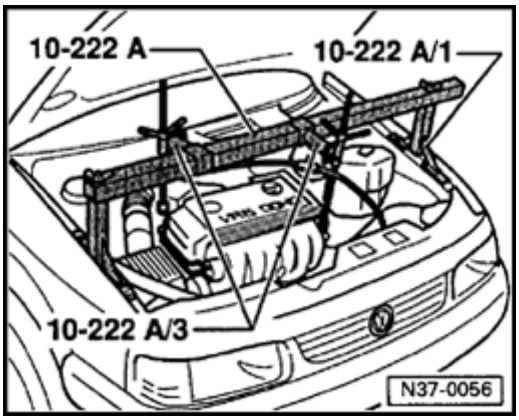

- Install support bar 10-222 A with legs 10-222 A/1 (6-cyl. engine adapter 10-222 A/3) and support engine/transmission in this position.

37-36

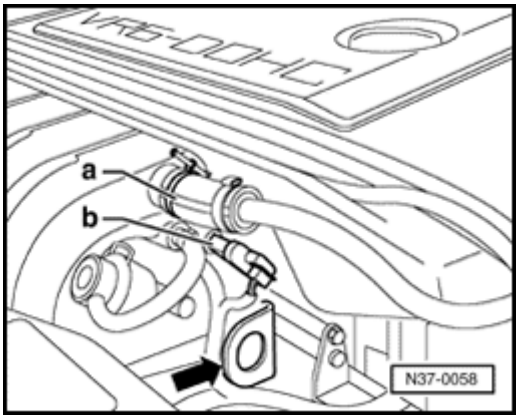

- Remove vacuum line -a- and connector -b- before installing support bar into eye (arrow) on vehicles with 6-cylinder engines.

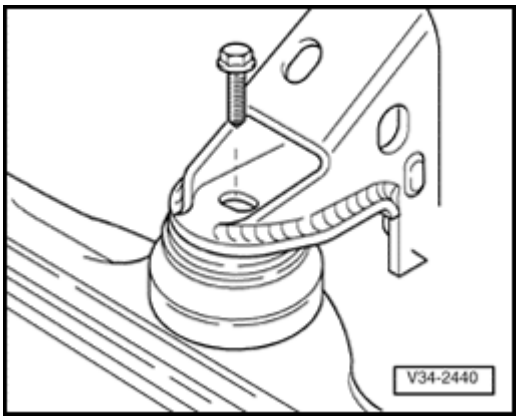

- Disconnect front mount bracket from engine carrier.
- Remove mount bracket.
- Remove coolant expansion tank and set aside.
- Remove left engine mount complete.
  - On vehicles with 6-cylinder engine remove drive belt cover.
- Disconnect axle shafts at transmission drive flanges.
- Remove left wheel.

37-37

- Turn steering to right lock.

- Raise right axle shaft and secure.

- Mark installation position of ball joint bolts on left side control arm and remove bolts.

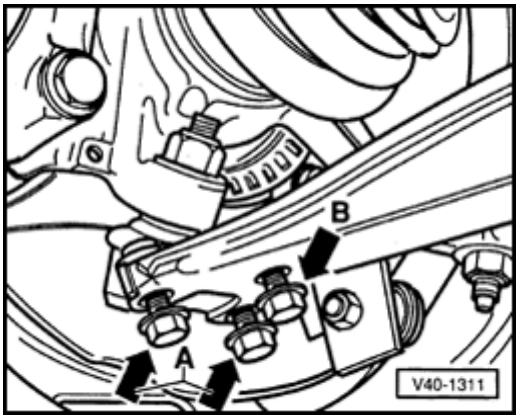

- Vehicles with Plus suspension, remove bolts -A- and loosen bolts -B-.

- Swing ball joint outward and place left side axle shaft to one side.
  - Vehicles with tripodic (star-shaped) joint: remove drive shaft.

⇒ *Repair manual, Suspension, Wheels, Brakes, Steering, Repair Group 40.*

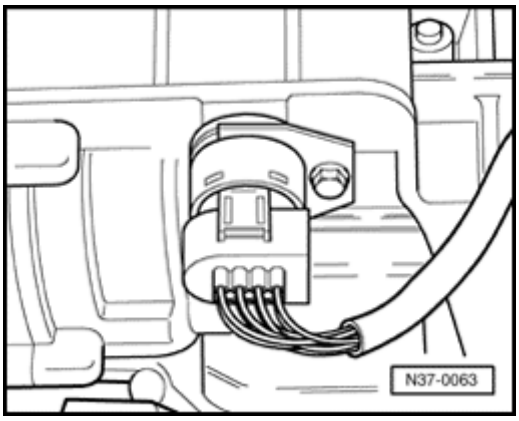

- Disconnect harness connector from Multi-function Transmission Range (TR) Switch and remove switch.

- Remove ATF oil pan protective plate.

37-38

- Remove balance weight.

- Remove bracket for power steering pressure hose.

- Remove torque converter cover plate and remove nuts from torque converter.

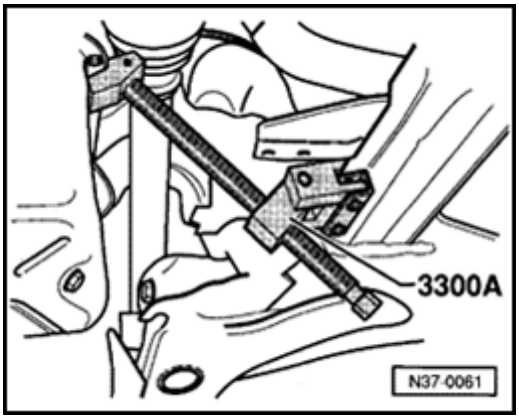

- Tilt engine and transmission forward with supporting device 3300 A.
- Lower engine using support device spindle.

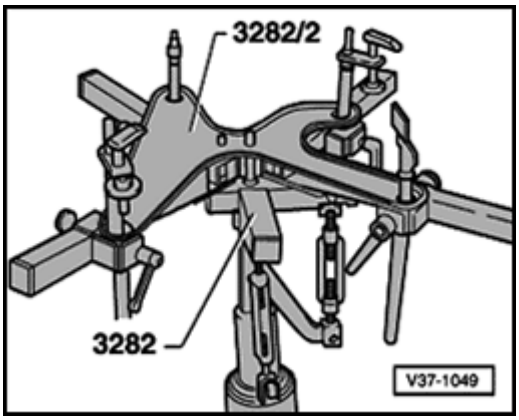

- Set up gearbox mount 3282.

Transmission mount 3282 is set up with the adjusting plate 3282/2 for removing the automatic transmission 096.

The symbols on the adjusting plate indicate the mounts required.

37-39

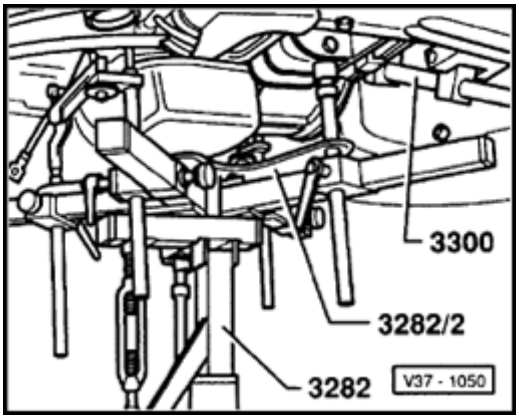

- Move jack VAG 1383 A with transmission support 3282 under transmission and support.

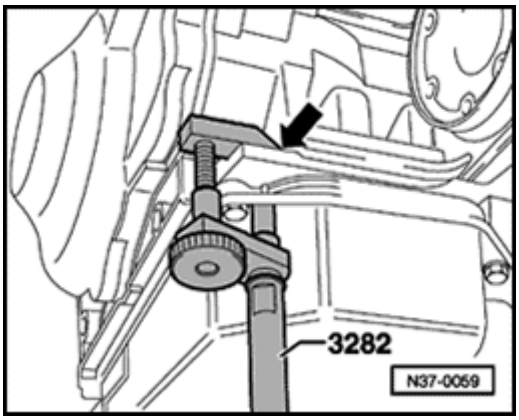

- Place securing mount pin on transmission pan and secure to housing (arrow).
- Remove lower engine/transmission connecting bolts.
- Pry transmission off engine; when doing this, press torque converter out of drive plate.
- Press torque converter against ATF pump.
- Lower transmission slightly.

37-40

- Tilt transmission using jack spindle and while lowering ensure cover (wheelhousing side) is guided closely past wheelhousing.

- Rotate transmission and lower it carefully.

- Secure torque converter to prevent it falling out.

Transporting the automatic gearbox

Special tool 3336 may be used to transport the automatic gearbox and also when setting up gearbox mount 3282.

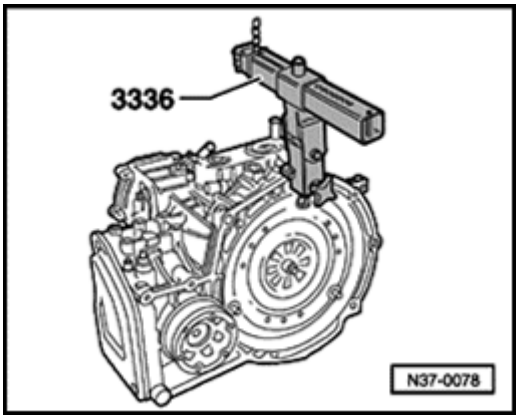

- Secure special tool 3336 to gearbox housing flange (arrow).
- Position pins so that 8 holes are visible in chain direction.

Installing

Installation is carried out in the reverse order.

When installing the torque converter, ensure that both drive pins engage in the ATF pump inner wheel recesses.

- Before installing, ensure that dowel sleeves for aligning the engine and transmission are correctly located.

- Replace selector cable anchor locking washer.

- Check selector lever cable adjustment, adjust if necessary ⇒ page 37-3 .

37-42

Tightening torques

Axle shaft to drive flange	45 Nm (33 ft lb)
Torque converter to drive plate	60 Nm (44 ft lb)
Transmission to engine bolt M 12	80 Nm (59 ft lb)
bolt M 10	60 Nm (44 ft lb)
Front mount to mounting assembly	60 Nm (44 ft lb)
Left mount to mounting assembly	60 Nm (44 ft lb)
Left mount to transmission	25 Nm (18 ft lb)
Cover plate to transmission	15 Nm (11 ft lb)
Ball joint to control arm	35 Nm (26 ft lb)
Starter to transmission	60 Nm (44 ft lb)

ATF level

ATF level, checking

Checking conditions

- When checking ATF level the transmission must not be in emergency running mode.
- Vehicle parked on level surface, parking brake applied
- Selector lever at "P" and engine running at idle speed

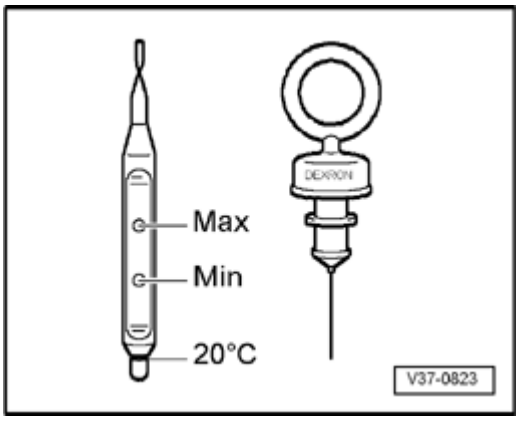

- When cold, the ATF should be visible up to the 20 ° C marking
- Bring ATF up to normal operating temperature - approx. 60 ° C (140 ° F)

Operating temperature is measured with VAG 1551 Scan Tool (ST) ⇒ page 01-40 , Reading measured value block. Check ATF level again and top up or extract as necessary.

It is essential that the ATF level is between the Min. and Max. markings.

CAUTION!

Too much or too little ATF will affect the operation of the transmission. The ATF level must therefore be checked at regular intervals.

ATF, topping up

CAUTION!

- ***Too much ATF will cause transmission malfunctions and must therefore be extracted. This can be done with VAG 135 A/1 and VAG 135 A probe, or E 1 fluid evacuator.***

- ***Only ATF with the designation Dexron may be used. Do not use any lubricant additives.***

- Add ATF using a funnel, approx. 3 liters (3.2 US qt.) at first for an initial filling.

- Then start engine and shift through all the selector lever positions with the vehicle stationary.

- Check ATF level ⇒ page 37-43 .

- Use a non-fluffing cloth for wiping off the dipstick.

The ATF level changes with the temperature of the fluid. The Min. and Max. markings on the dipstick refer to the correct levels for an ATF temperature of 60 ° C (140 ° F).

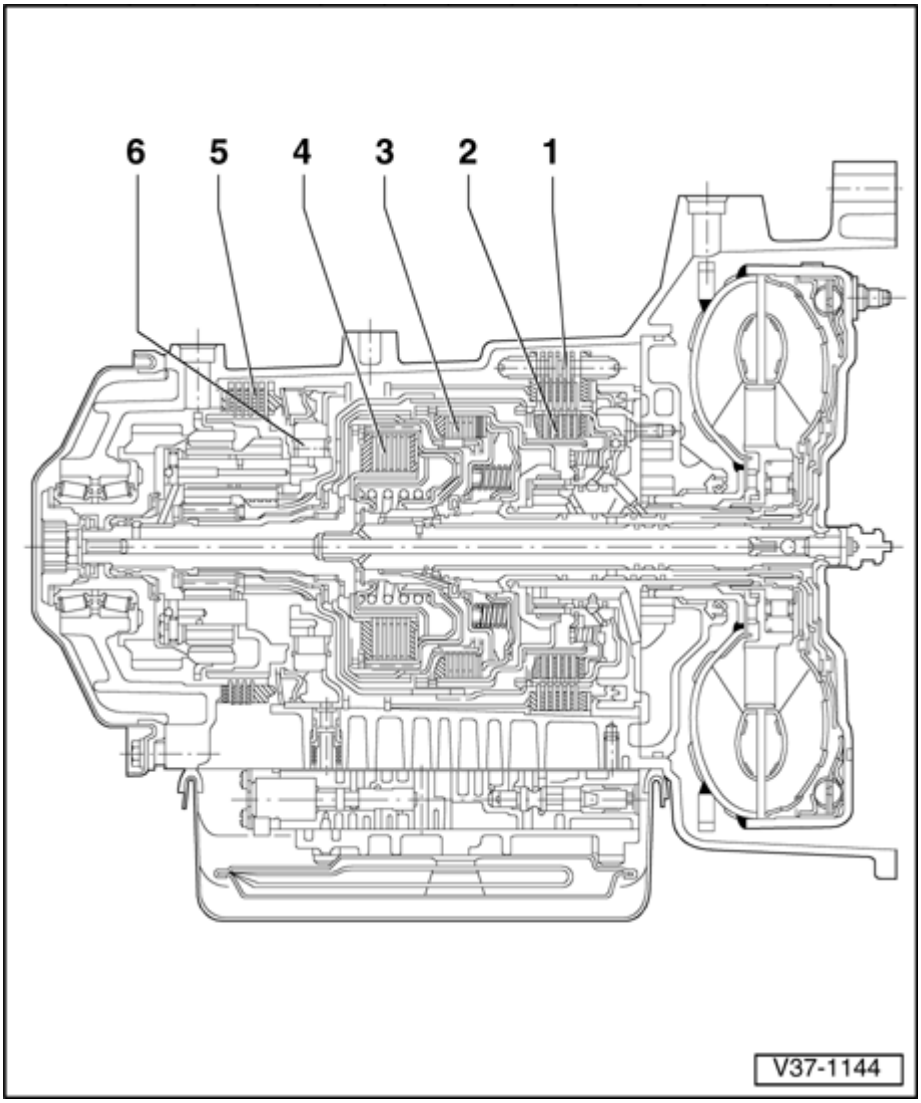

Gear selector elements

Gear selector elements, position

- **1 - 2nd and 4th gear brake -B2-**
- **2 - Reverse gear clutch - K2-**
- **3 - 1st to 3rd gear clutch - K1-**
- **4 - 4th gear clutch -K3-**
- **5 - Reverse gear brake - B1-**
- **6 - Free wheel clutch**

Before starting repairs to the transmission, first carry out the On Board Diagnostic program ⇒ Repair Group 01.

The table on the following page shows which selector elements are operated for which gears, to help in dealing with complaints of poor performance, or for general drivetrain troubleshooting. The table makes it possible to determine which selector elements are not operating properly.

37-46

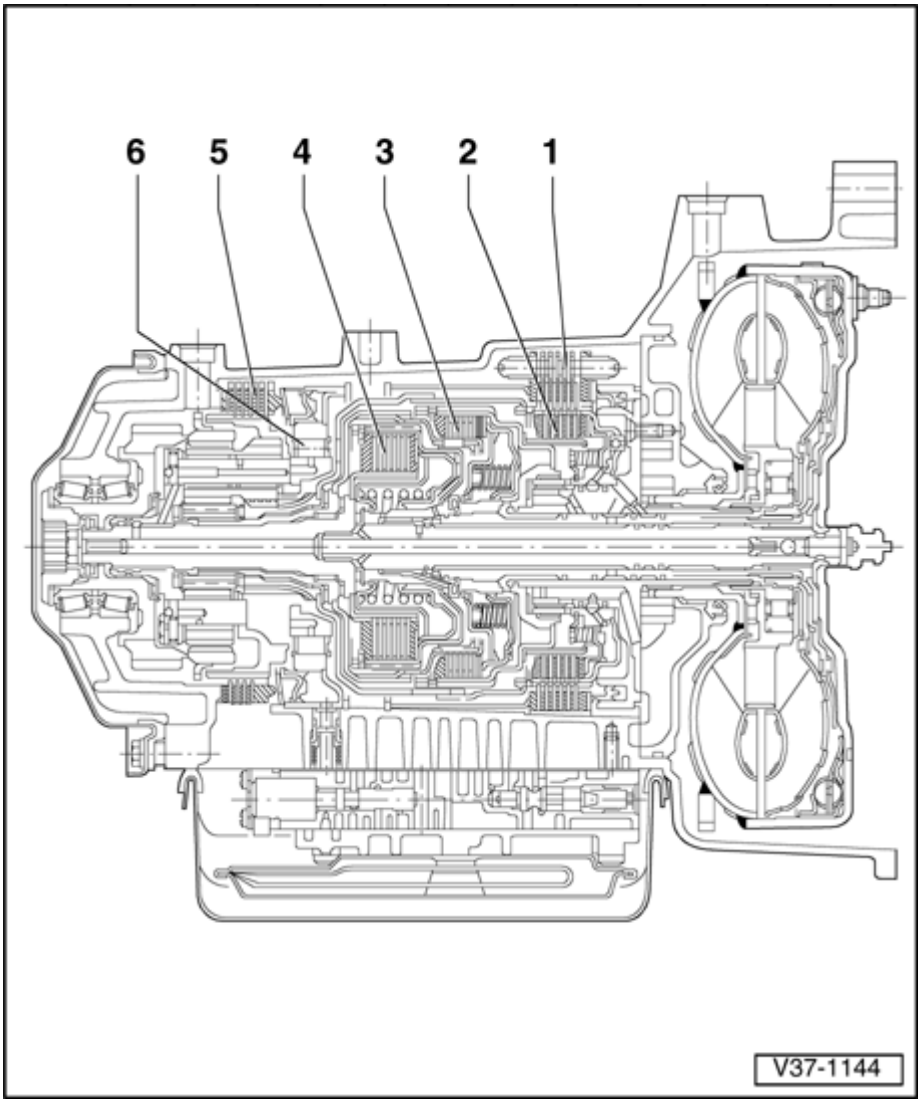

Gear selector elements, function

Vehicles with electronic program switch in Transmission Control Module (TCM)

Gear	B1	B2	K1	K2	K3	F
R	x			x		
1H			x			x
2H		x	x			
3H			x	x		
4M		x			x	

X = clutch, brake or free wheel engaged

H = hydraulic

M = mechanical

Transmission, disassembling and assembling

ATF cooler and ATF filler tube, removing and installing ⇒ page 37-48

Planetary gearbox disassembly and assembly, overview ⇒ page 37-49

Planetary gearbox, disassembling ⇒ page 37-61

Planetary gearbox, assembling ⇒ page 37-67

Planetary gearbox adjustments, overview ⇒ page 37-79

Valve body, removing and installing ⇒ page 38-22

37-48

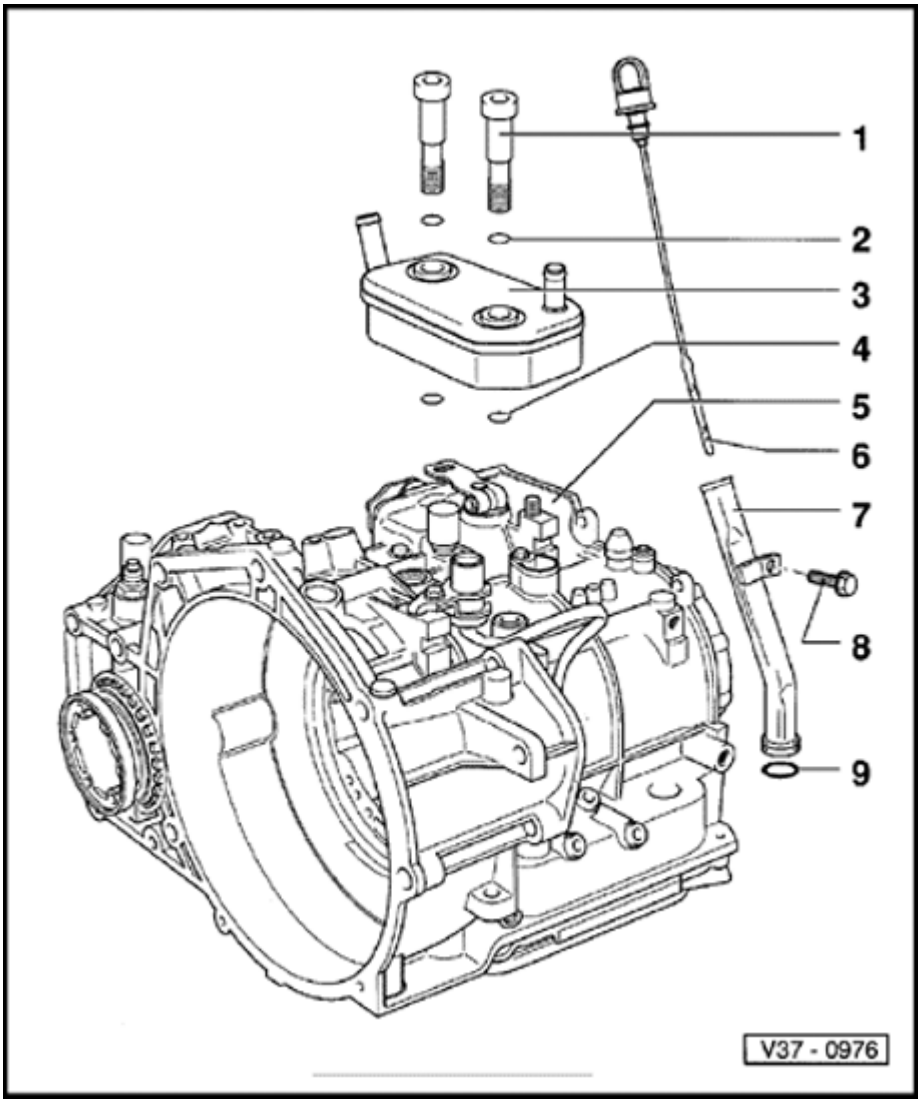

ATF cooler and ATF filler tube, removing and installing

1 - Banjo bolt

- Tightening torque: 35 Nm (26 ft lb)

2 - O-ring

- Always replace

3 - ATF cooler

4 - O-ring

- Always replace

5 - Transmission housing

6 - ATF dipstick

- Checking ATF level ⇒ page 37-43

7 - ATF filler tube

8 - Bolt

9 - O-ring

- Always replace

37-49

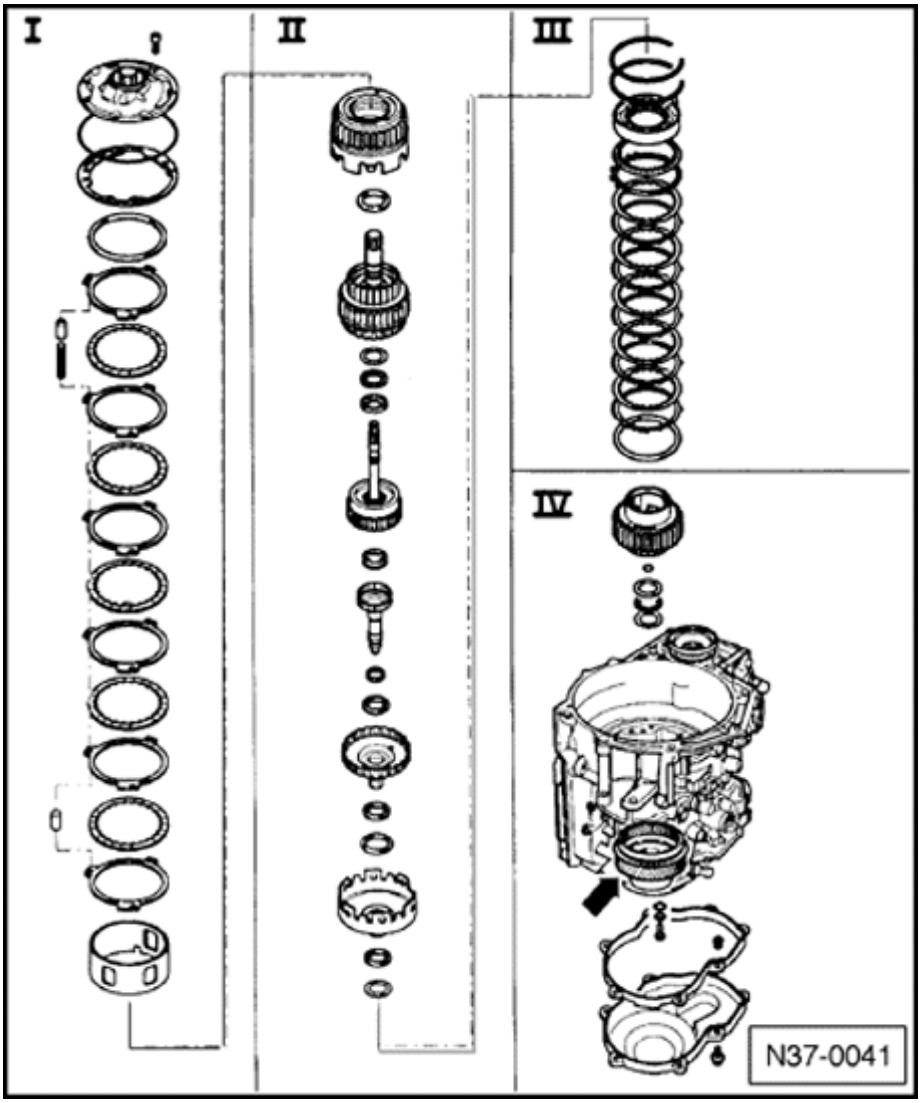

Planetary gearbox disassembly and assembly, overview

Note:

Disassembling planetary gearbox ⇒ page 37-61 .

Assembling ⇒ page 37-67 .

I - ATF pump to support tube, removing and installing ⇒ page 37-51

II - Reverse gear clutch -K2- to large sun gear, removing and installing ⇒ page 37-54

III - Free wheel and reverse gear brake -B1-, removing and installing ⇒ page 37-57

Note:

To remove and install free wheel first remove valve body together with plugs ⇒ page 38-22 .

37-50

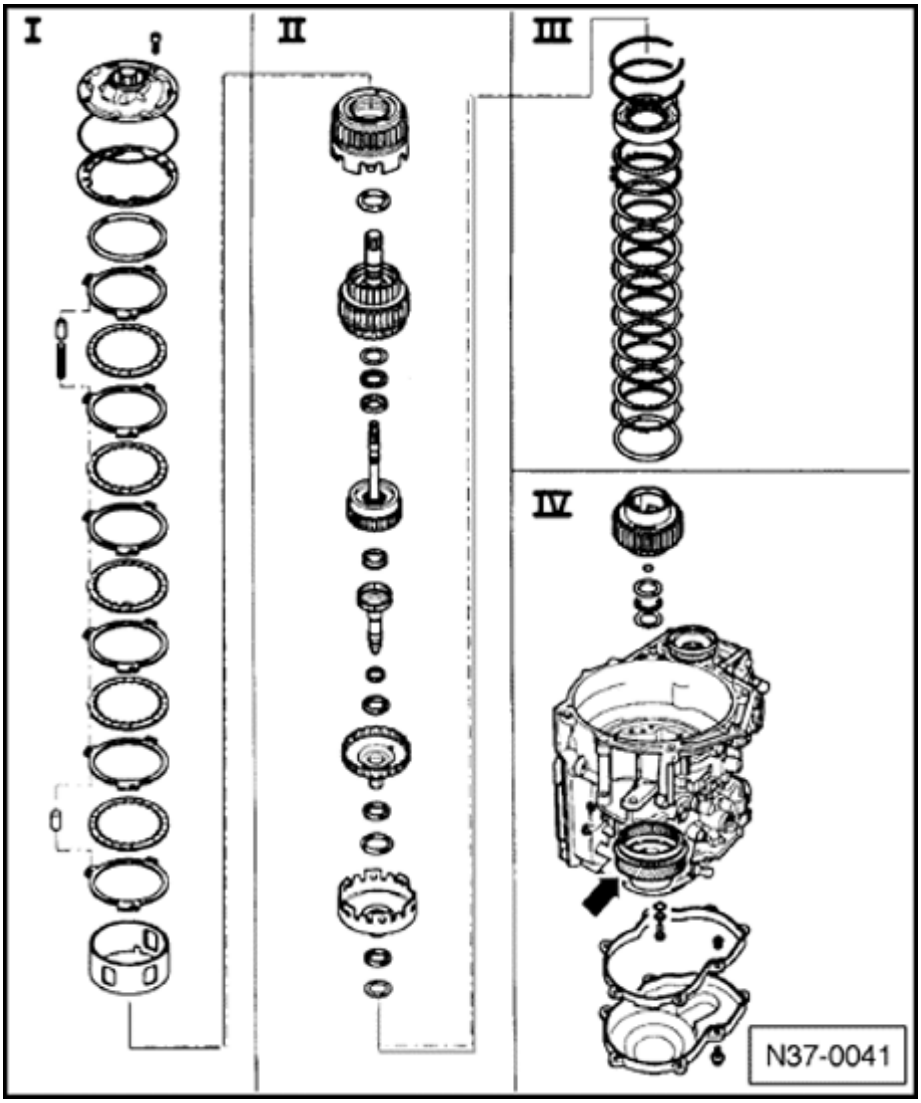

IV - Planet carrier and input gear, removing and installing ⇒ page 37-59

Note:

- *It is not necessary to remove the input gear (arrow).*
- *Removing and installing input gear ⇒ page 39-8 .*

37-51

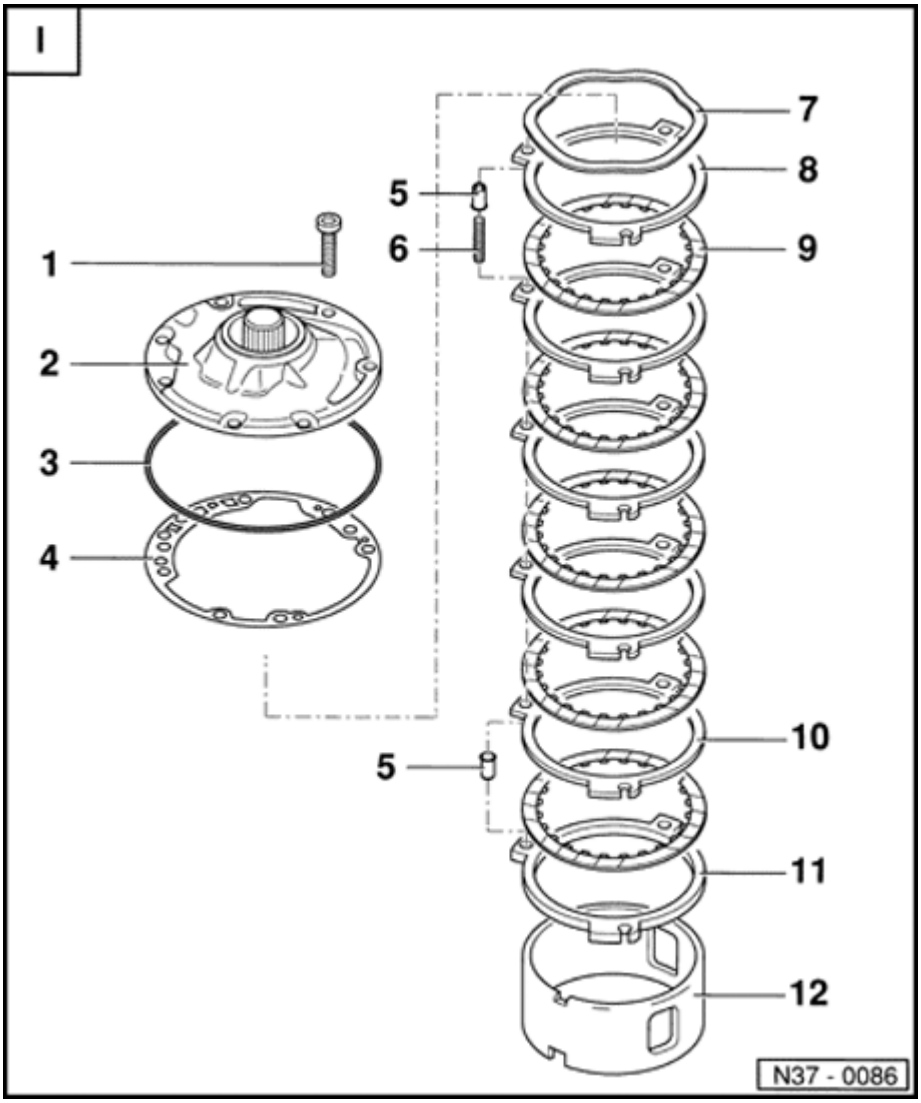

I - ATF pump to support tube, removing and installing

⇒ Overview, page 37-49

Note:

Disassembling planetary gearbox ⇒ page 37-61 .

Assembling ⇒ page 37-67 .

1 - Bolt

- Qty. 7
- Tightening torque: 8 Nm (71 in lb) plus an additional $^1/_4$ -turn (90 °)
- The additional $^1/_4$ -turn (90 °) may be done in several stages

2 - ATF pump with -B2- piston

- Disassembling and assembling ⇒ page 38-1

3 - O-ring

- Always replace
- Install on ATF pump

4 - Gasket

- Always replace

37-52

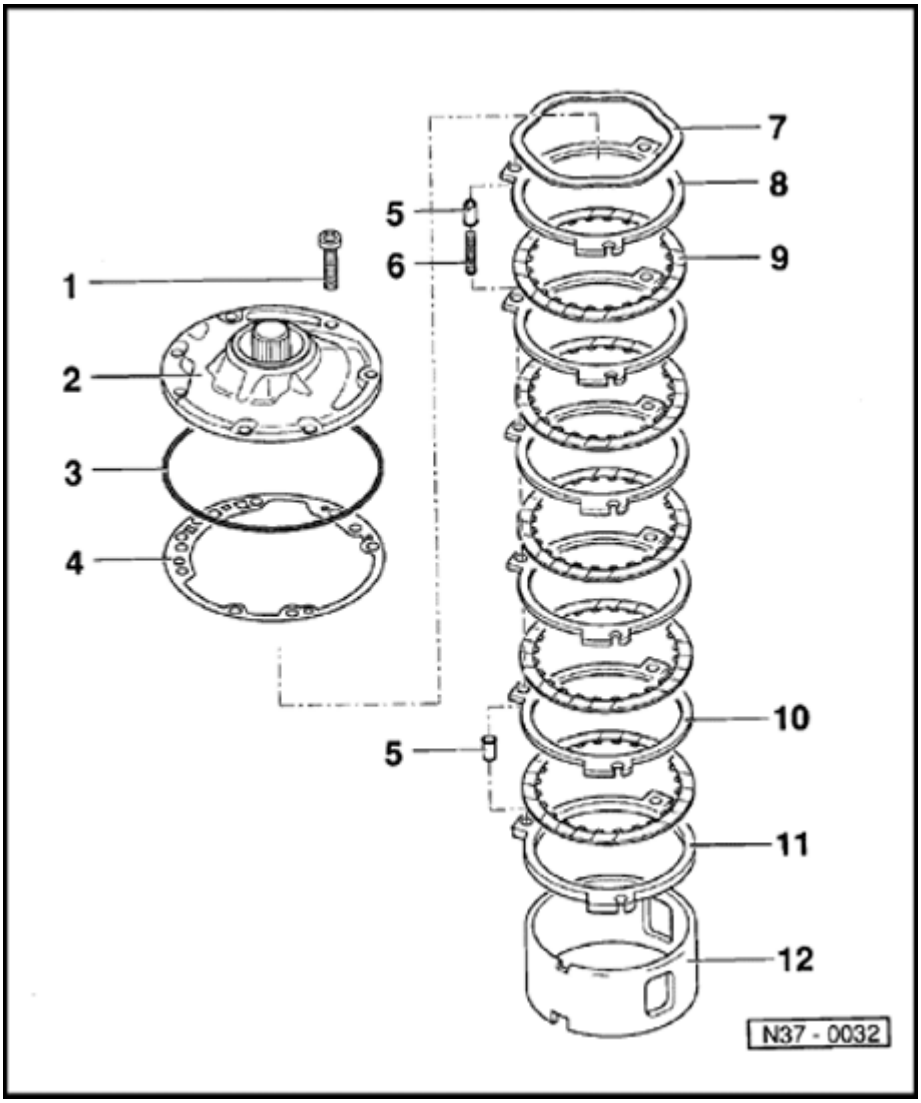

5 - Spring cap

- Qty. 6
- Install 3 spring caps after installing first outer plate
- Install 3 spring caps before installing last outer plate

6 - Spring

- Qty. 3

7 - Corrugated spring washer

8 - Outer plate -B2-

- Quantity ⇒ from page 00-3
- Determining thickness of outer plate ⇒ page 37-101 , 2nd and 4th gear brake -B2-, adjusting

9 - Inner plate -B2-

- Quantity ⇒ from page 00-3
- Before installing, place new inner plates in ATF for 15 minutes

37-53

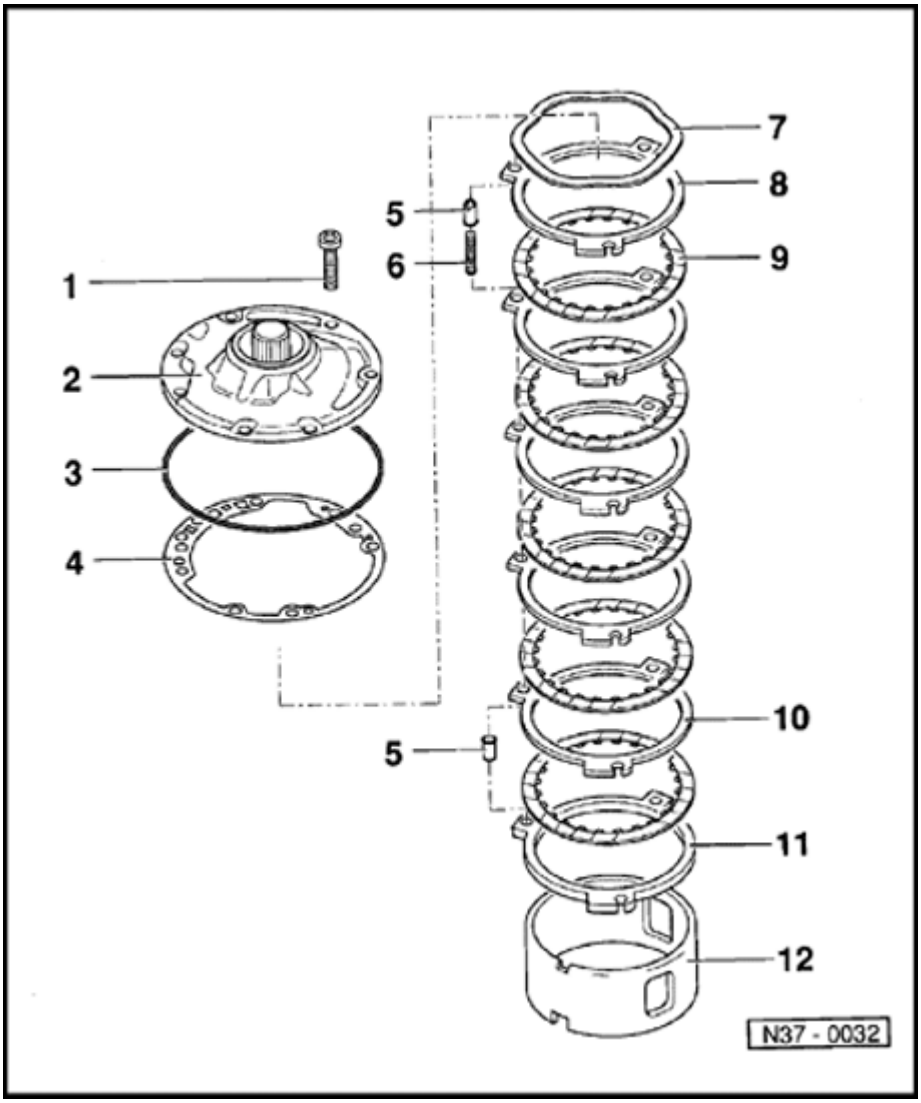

10 - Outer plate -B2-

- Always install outer plates that are 2 mm (0.079 in.) thick
- Quantity ⇒ from page 00-3

11 - Outer plate -B2-

- Fit 3 mm (0.118 in.) thick outer plate to supporting tube

12 - Supporting tube -B2-

- For -B2- plate package
- Length of -B2-:

with 4 inner plates	72.3 mm (2.846 in.)
with 5 inner plates	68.6 mm (2.701 in.)
with 6 inner plates	64.9 mm (2.555 in.)

- Quantity of -B2- inner plates ⇒ from page 00-3
- Insert so that groove engages in wedge of free wheel

37-54

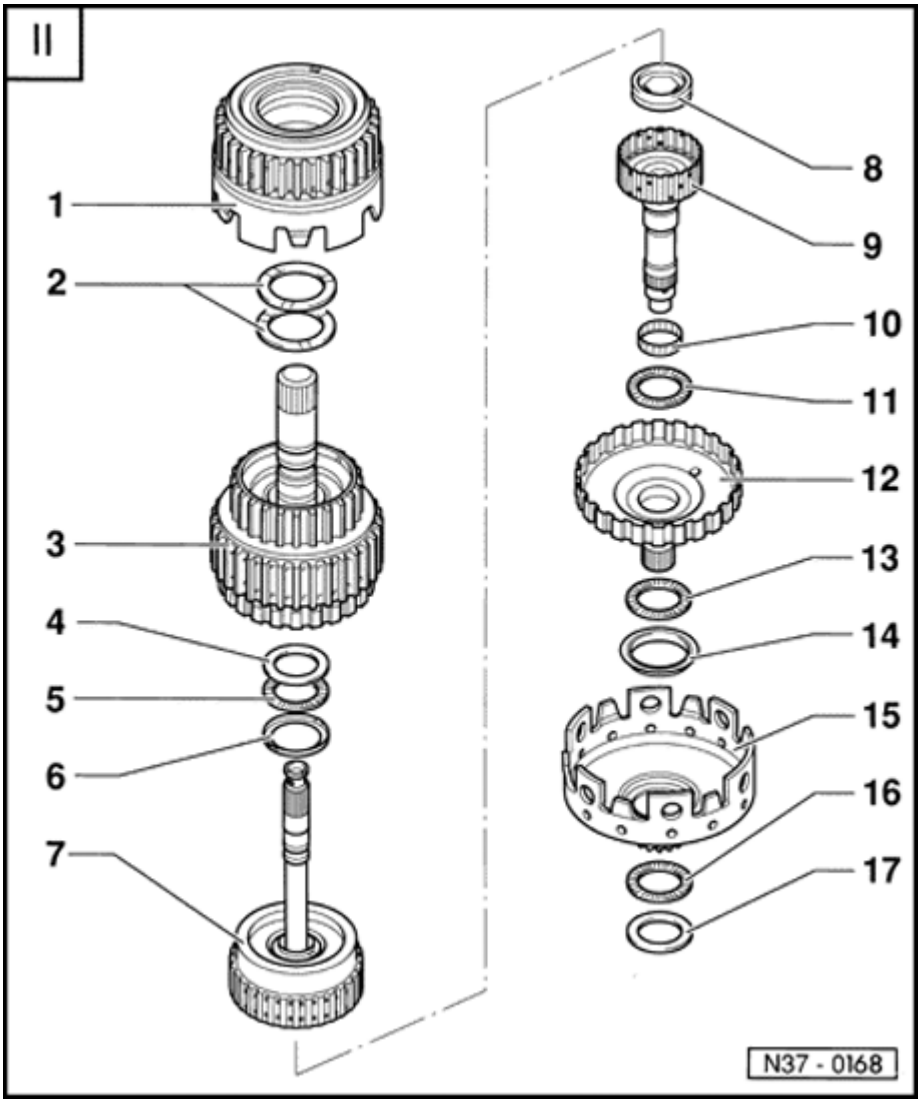

II - Reverse gear clutch - K2- to large sun gear, removing and installing

⇒ Overview, page 37-49

Note:

Disassembling planetary gearbox ⇒ page 37-61 .

Assembling ⇒ page 37-67 .

1 - Reverse gear clutch - K2-

- Disassembling and assembling ⇒ page 38-13

2 - Shim

- Determining thickness ⇒ page 37-94 , Clutch play between -K1- and -K2-, adjusting
- 1 or 2 shims can be installed

37-55

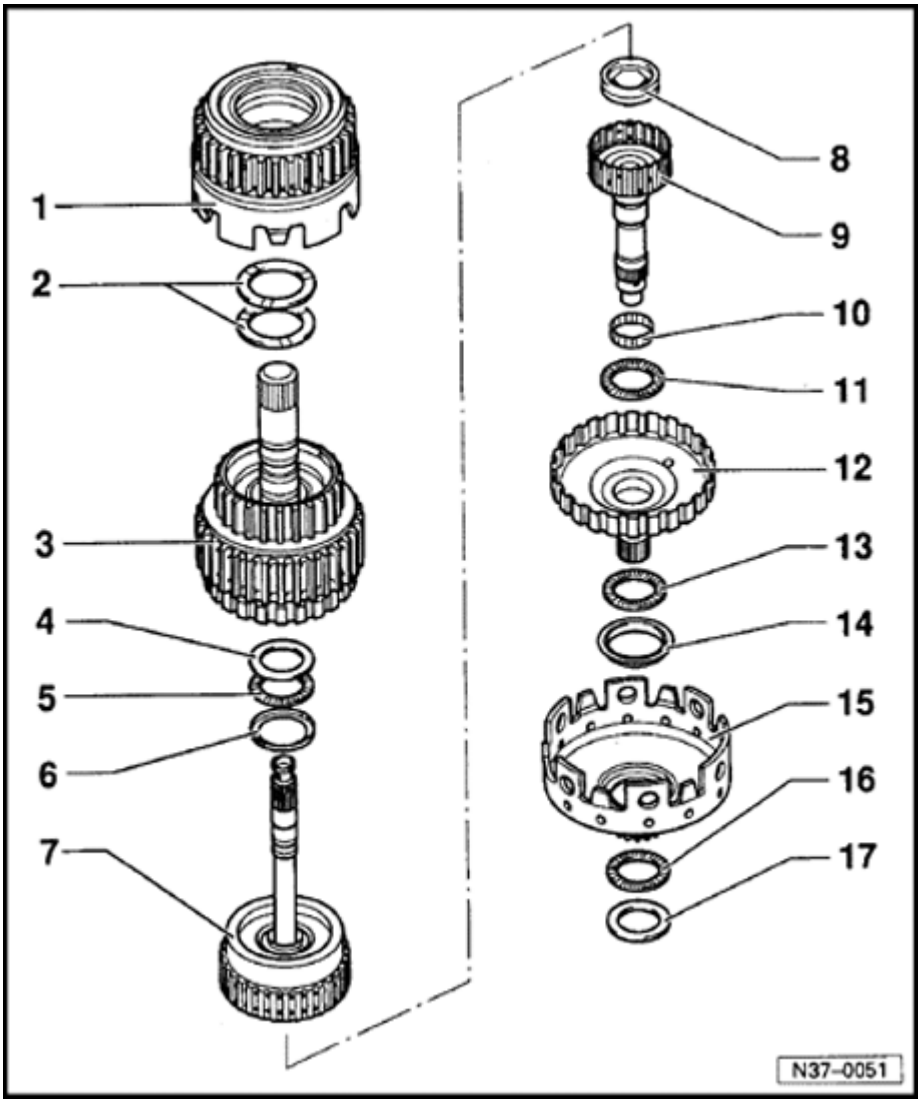

3 - 1st to 3rd gear clutch - K1- with turbine shaft

- Disassembling and assembling ⇒ page 38-7

4 - Axial needle bearing washer

5 - Axial needle bearing

6 - Axial needle bearing washer

- Lugs face toward axial needle bearing

7 - 4th gear clutch -K3- with pump shaft

- Disassembling and assem-bling ⇒ page 38-17

37-56

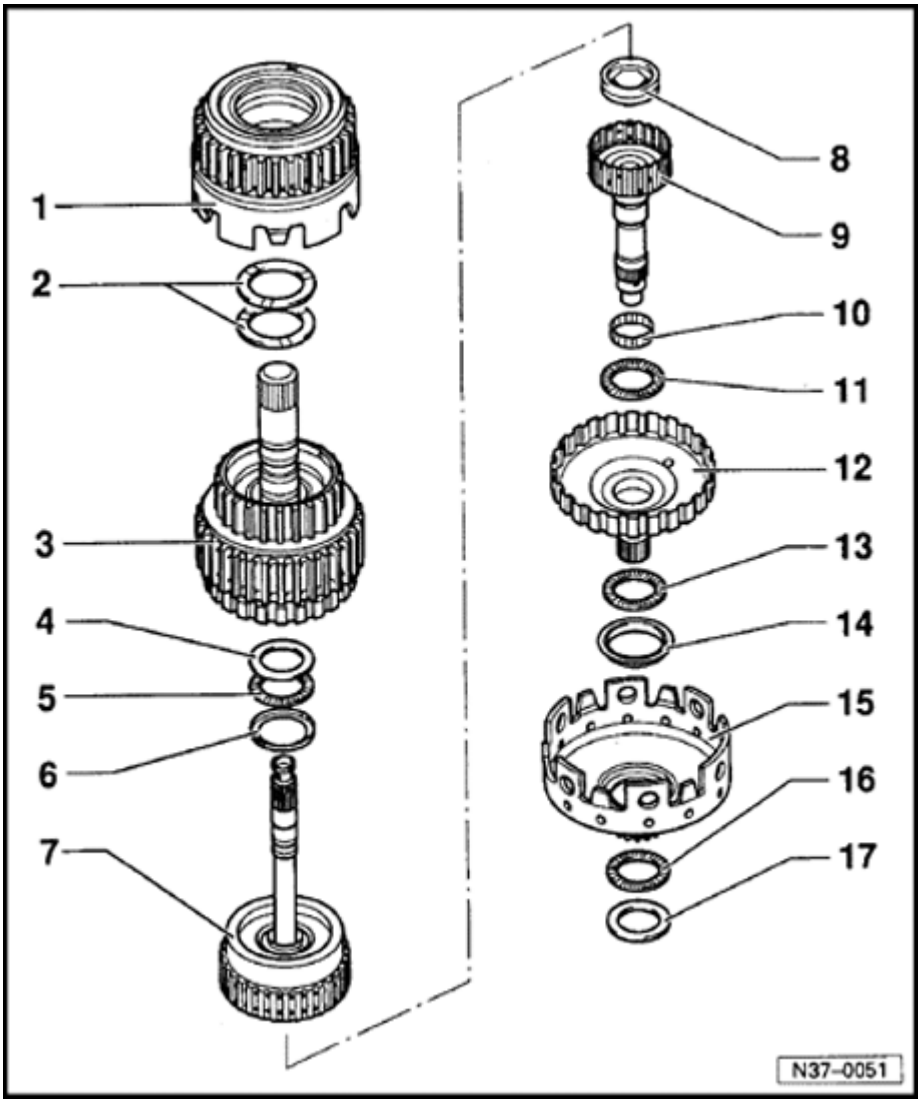

8 - Axial needle bearing with washer

- Axial needle bearing faces toward small drive shaft

9 - Small drive shaft

10 - Needle bearing

11 - Axial needle bearing

12 - Large drive shaft

13 - Axial needle bearing

14 - Axial needle bearing washer

- With shoulder

15 - Large sun gear

16 - Axial needle bearing

17 - Axial needle bearing washer

37-57

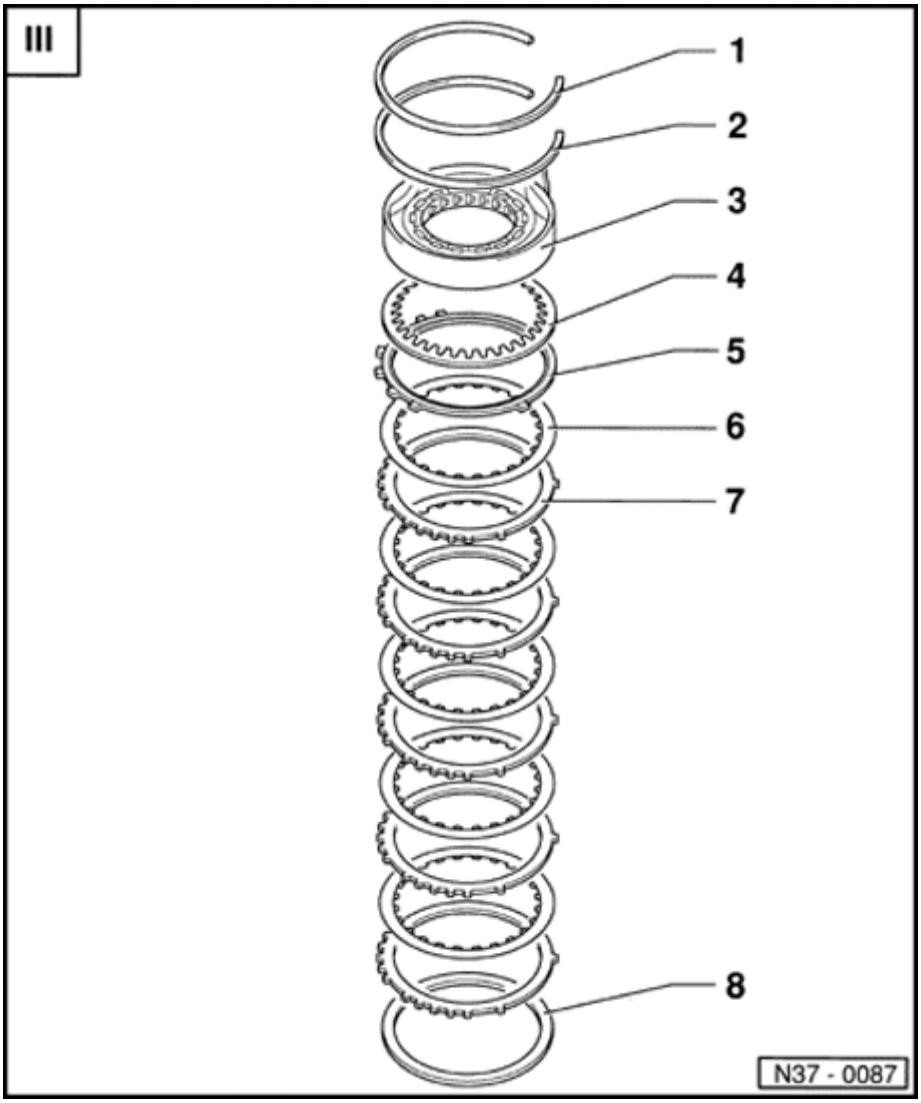

III - Free wheel and reverse gear brake -B1-, removing and installing

⇒ Overview, page 37-49

Note:

Disassembling planetary gearbox ⇒ page 37-61 .

Assembling ⇒ page 37-67 .

1 - Circlip

- For supporting tube -B2-

2 - Circlip

- For free wheel

3 - Free wheel with -B1- piston

- Before removing free wheel, remove valve body and sealing plugs ⇒ page 38-22
- Disassembling and assembling ⇒ page 38-4

4 - Dished spring

- Install with convex part facing free wheel

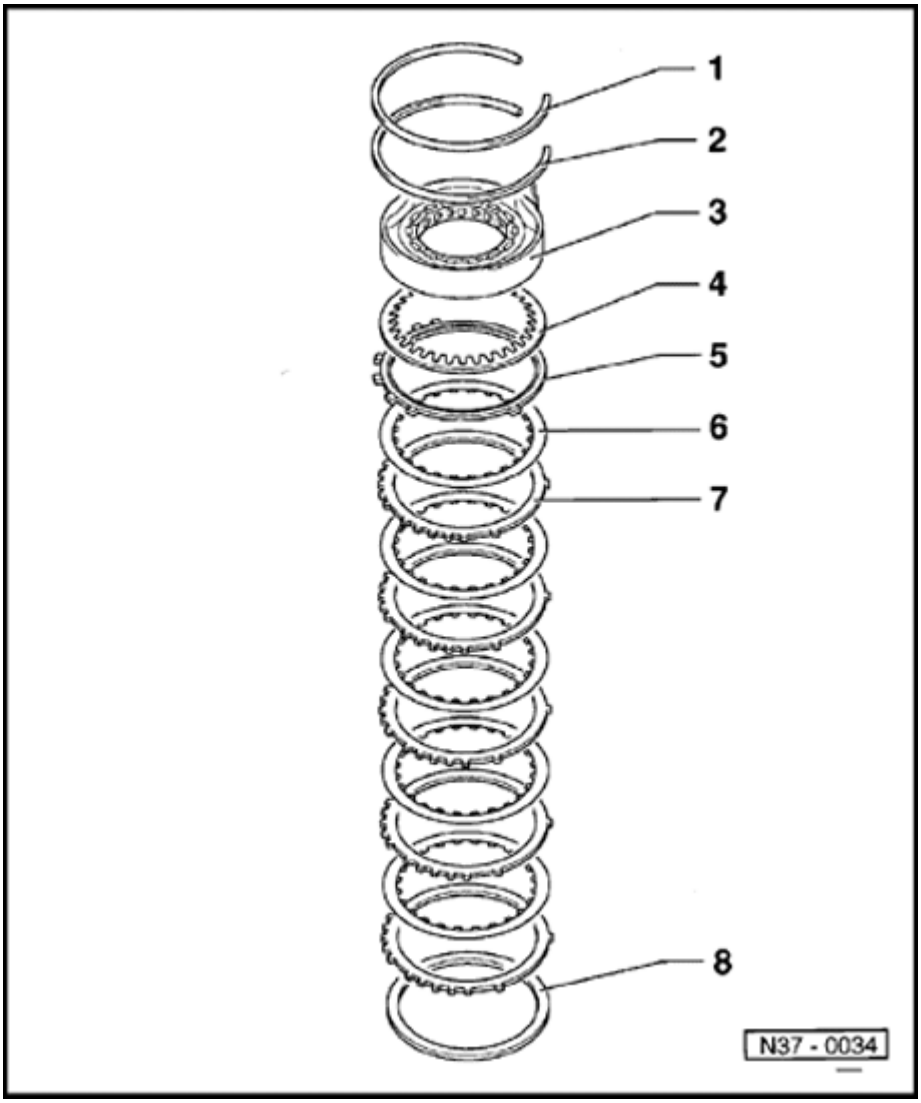

5 - Pressure plate

- Install with flat side facing plates
- Differing plate thickness depending on number of inner plates installed:Thickness with 4 inner plates: 13.5 mm (0.531 in.) Thickness with 5 inner plates: 10.5 mm (0.413 in.)

6 - Inner plate, -B1-

- Quantity ⇒ from page 00-3
- Before installing place in ATF for 15 minutes

7 - Outer plate, -B1-

- Quantity ⇒ from page 00-3

8 - Shim

- Determining thickness ⇒ page 37-87 , Reverse gear brake - B1-, adjusting

37-59

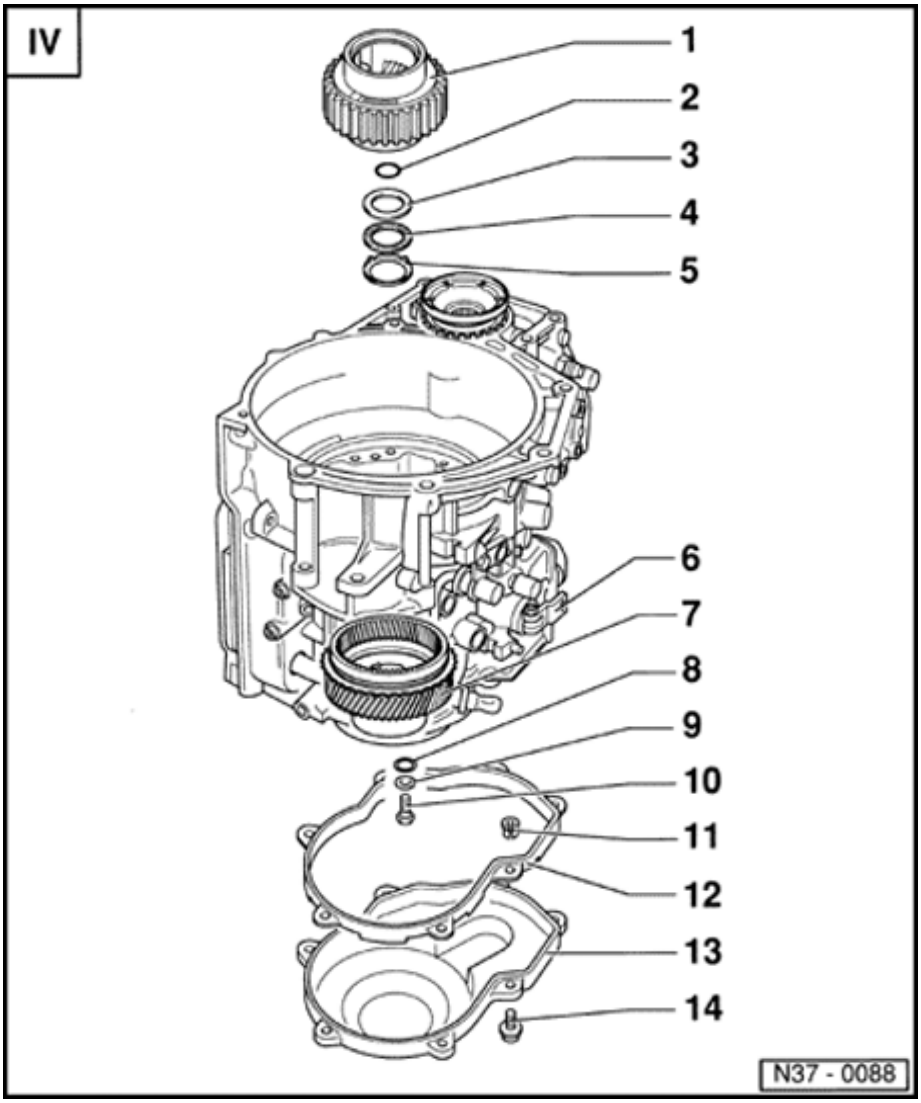

IV - Planet carrier and input gear, removing and installing

⇒ Overview, page 37-49

Note:

Disassembling planetary gearbox ⇒ page 37-61

Assembling ⇒ page 37-67 .

1 - Planet carrier

- Adjusting ⇒ page 37-80

2 - O-ring

- Always replace
- Insert in planet carrier

3 - Axial needle bearing washer

4 - Axial needle bearing

5 - Axial needle bearing washer

- Install smooth side in input gear

6 - Transmission housing

37-60

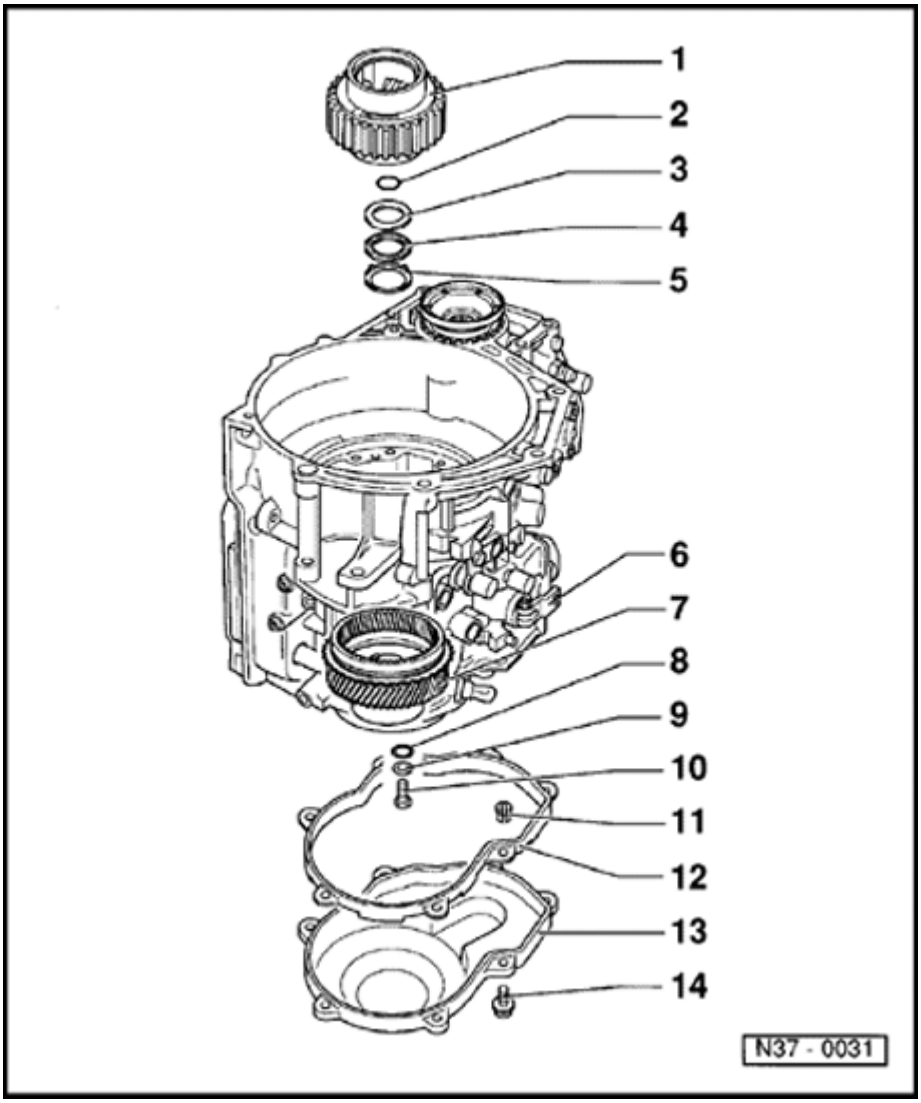

7 - Input gear

- Do not remove to disassemble planetary gearbox
- Removing and installing input gear or axial needle bearing for planet carrier ⇒ page 39-8

8 - Planet carrier shim

- Determining thickness ⇒ page 37-80 , Planet carrier, adjusting

9 - Washer

10 - Bolt

- Tightening torque: 30 Nm (22 ft lb)
- For small input shaft

11 - Spacer bush

- Qty. 7
- Clip into gasket

12 - Gasket

- Always replace

13 - Cover

14 - Bolt

- Tightening torque: 8 Nm (71 in lb)

37-61

Planetary gearbox, disassembling and assembling

Disassembling

- Seal ATF cooler connections.

- Drain ATF.

  ATF can be removed using VAG 1358A extraction system with VAG 1358A/1 probe, or EZ1 fluid evacuator.

- Remove torque converter.

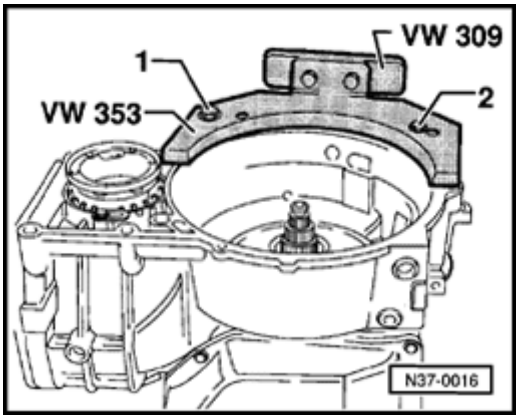

- Secure transmission to assembly support with bolts -1- and -2-.

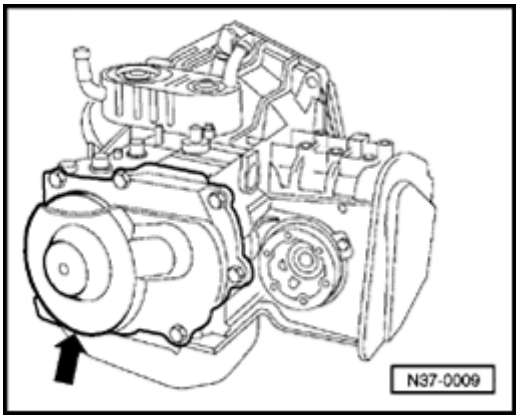

- Remove transmission housing cover with gasket (arrow).

37-62

- Remove sump.

- Remove ATF screen.

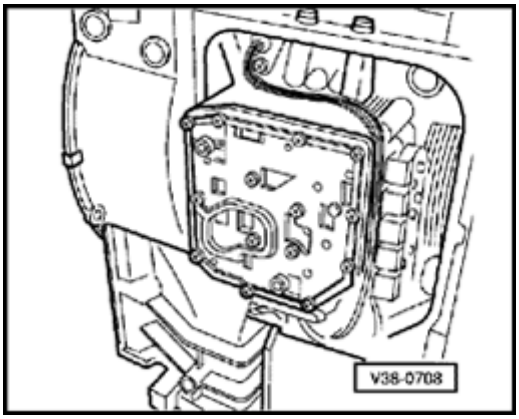

- Remove valve body.

⇒ page 38-22

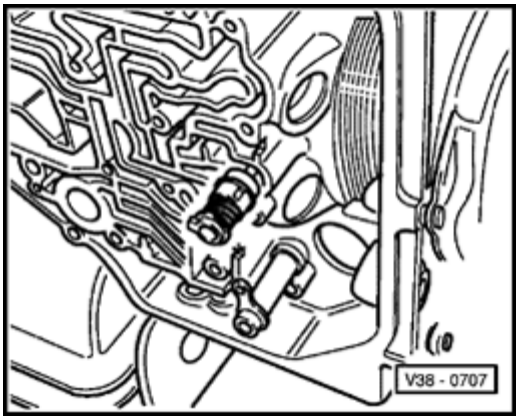

- Remove sealing plugs for -B1-.

37-63

To remove ATF pump:

- Remove ATF pump bolts.

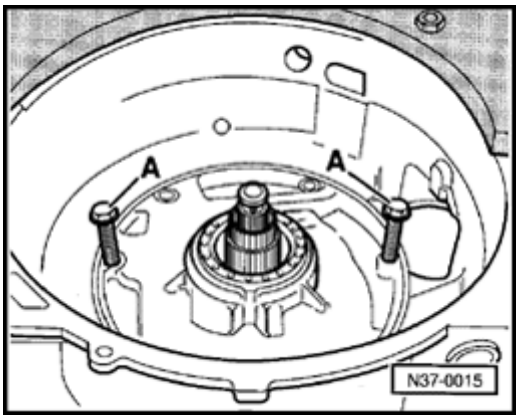

- Screw bolts -A- (M8) into tapped holes in ATF pump.
- Press ATF pump off transmission by turning bolts -A- evenly.

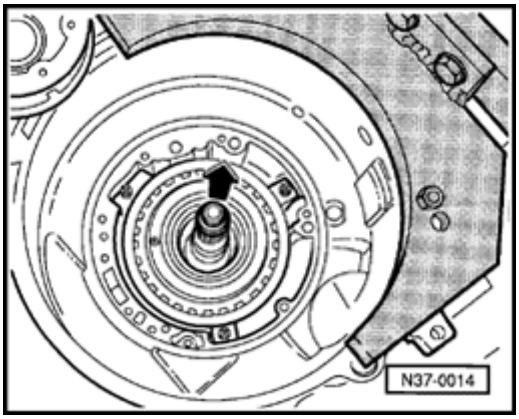

- Take out all clutches with supporting tube, -B2- plates, springs and spring caps together.

37-64

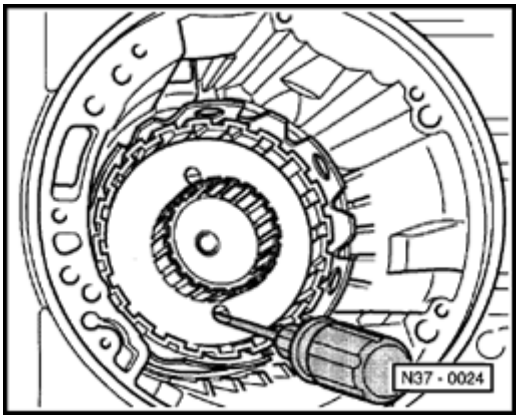

- Insert screwdriver through hole of large drive shaft and large sun gear to loosen and tighten bolt for small drive shaft.

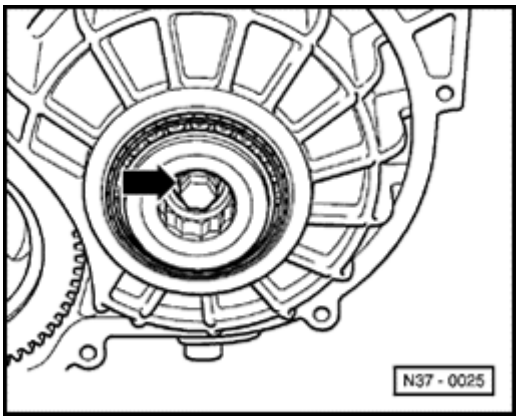

- Loosen small drive shaft bolt (arrow).
- Remove small drive shaft bolt, washer and shim.
  - ♦ Planet carrier axial needle bearing remains in transmission/input gear
- Pull out small drive shaft.

37-65

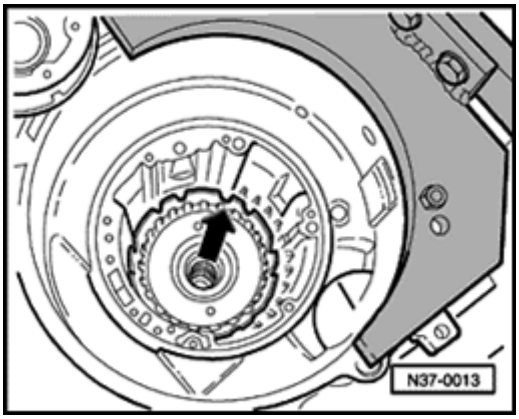

- Pull out large drive shaft (arrow).

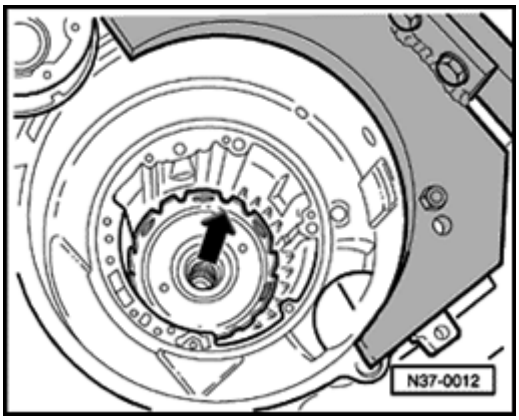

- Pull out large sun gear (arrow).

37-66

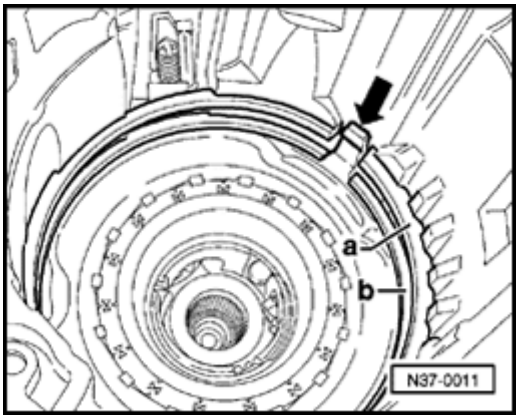

- Remove supporting tube circlip -a- and free wheel circlip -b-.
- Remove free wheel from transmission housing by pulling on free wheel retaining wedge (arrow) with pliers.

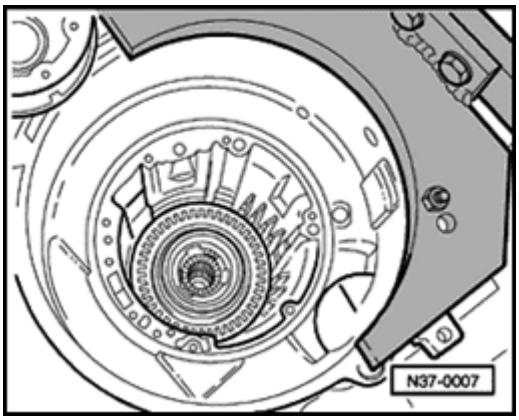

- Pull out planet carrier with dished spring.
- Remove reverse gear brake -B1- plates.

Note:

- *It is not necessary to remove input gear to disassemble the planetary gearbox.*

Removing and installing input gear ⇒ page 39-8 .

Assembling planetary gearbox ⇒ page 37-67 .

Assembling

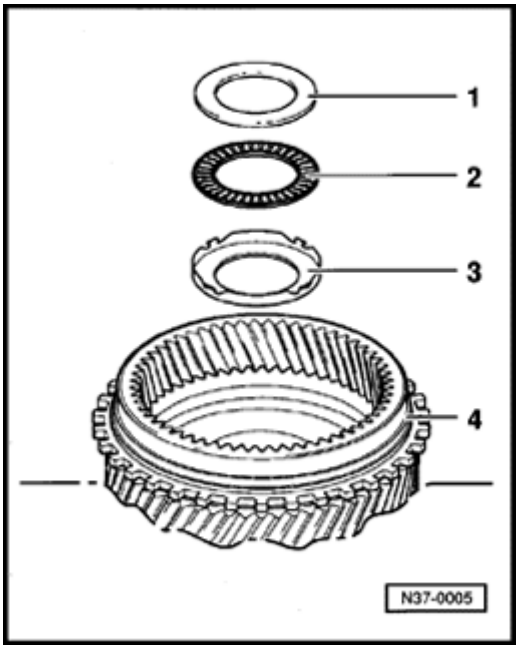

- Install axial needle bearing with washer onto input gear.

1 - Axial needle bearing washer

2 - Axial needle bearing

3 - Axial needle bearing washer

- Install smooth side into input gear

4 - Input gear

♦ Installed in transmission housing ⇒ page 37-49)

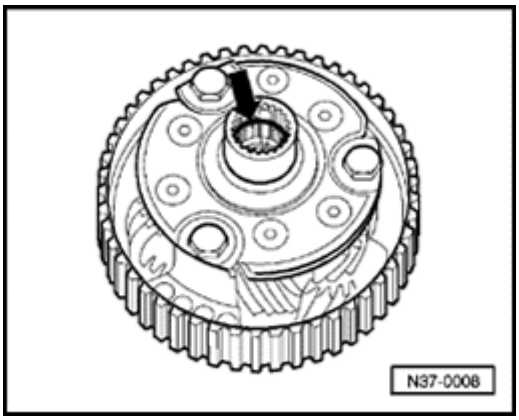

- Install O-ring in planet carrier.

Note:

After replacing planet carrier, adjust ⇒ page 37-80 .

37-68

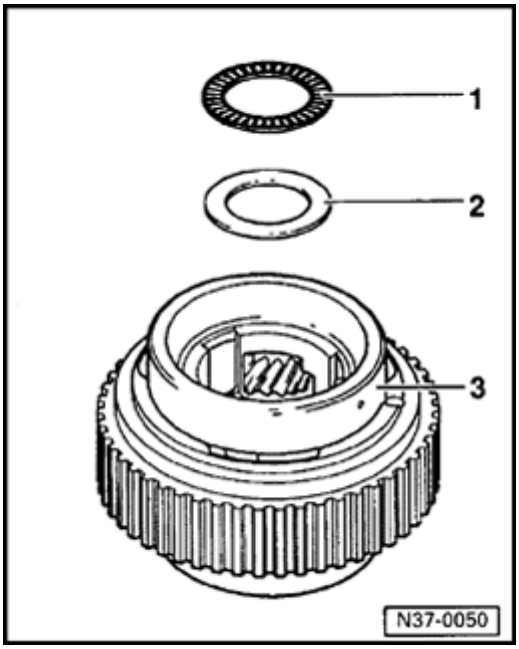

- Install washer and axial needle bearing into planet carrier.

1 - Axial needle bearing

2 - Axial needle bearing washer

3 - Planet carrier

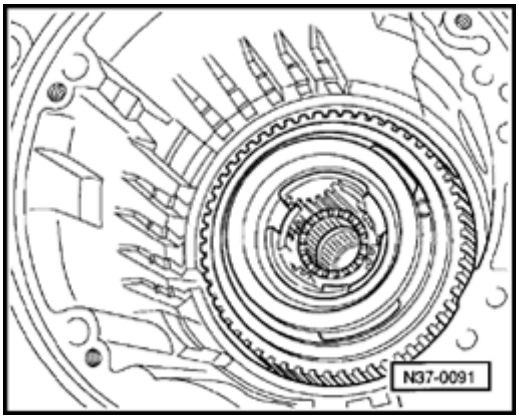

- Install planet carrier into input gear.
- Center washer and axial needle bearing in small sun gear.

37-69

- Install inner and outer -B1- plates.

- Install pressure plate with flat side facing plates.

  - Thickness of pressure plate varies according to number of plates ⇒ page 37-58 .

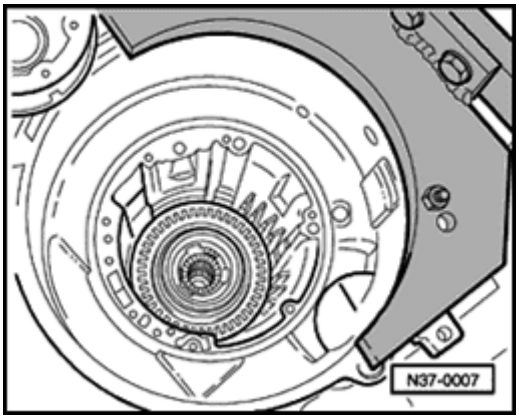

- Install dished washer with convex side facing toward free wheel.

Note:

When replacing:

- *Transmission housing*
- *Free wheel*
- *Piston for reverse gear brake -B1-*
- *or plates*

... adjust -B1-, ⇒ page 37-87 .

37-70

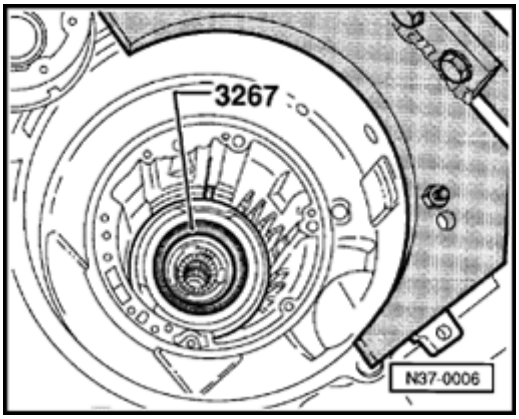

- Preload free wheel rollers with 3267 assembly ring and install free wheel.

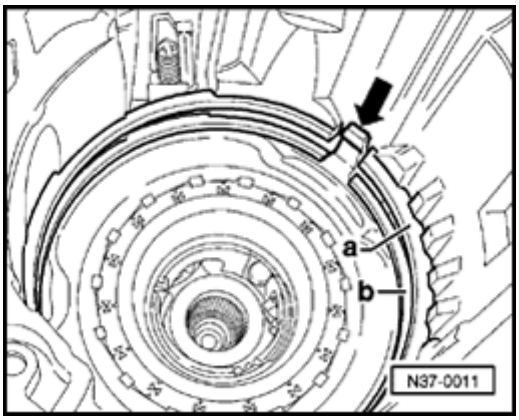

- Install circlip -b- for free wheel and circlip -a- for supporting tube.
  - Install so that circlip gaps are over free wheel retaining wedge (arrow).
- Carry out check measurement of -B1- ⇒ page 37-93 .

37-71

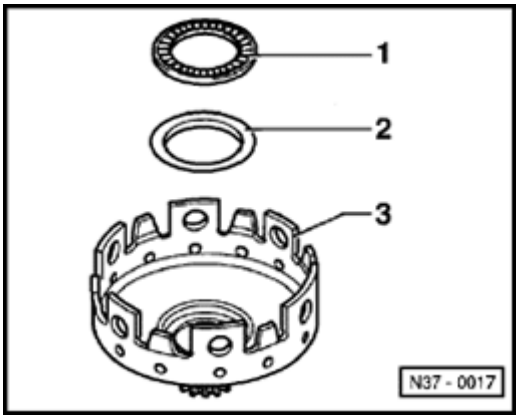

- Install washer with axial needle bearing in large sun gear.

1 - Axial needle bearing

2 - Washer with shoulder

- Install with smooth side facing axial needle bearing

3 - Large sun gear

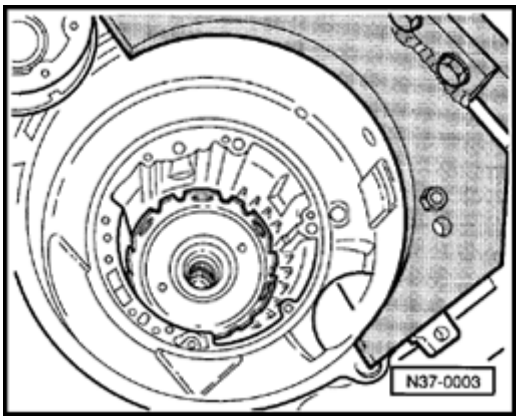

- Install large sun gear with bearing.
  - Center both washers with axial needle bearing between sun gears.

37-72

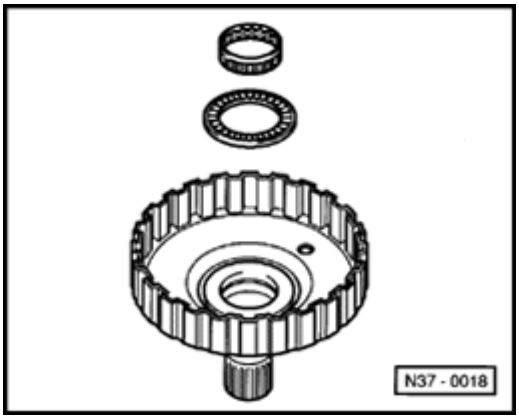

- Install axial needle bearing and needle bearing in large drive shaft.

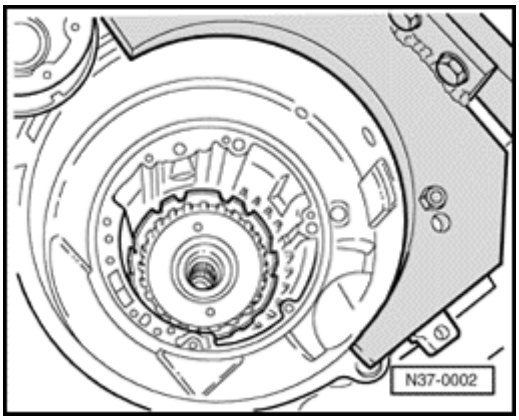

- Install large drive shaft with bearing.

37-73

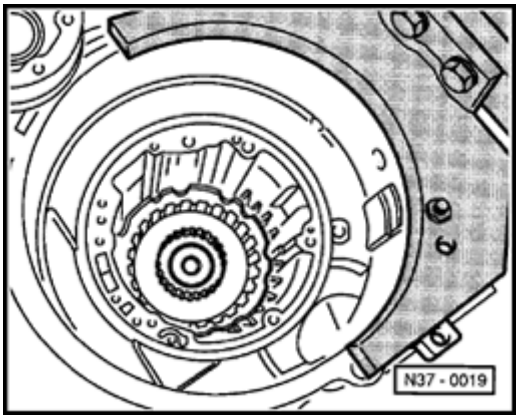

- Install small drive shaft.

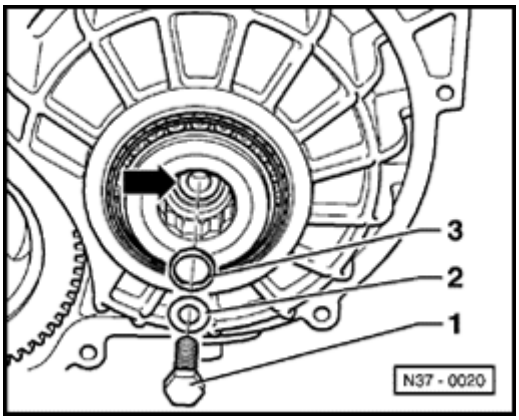

- Install small drive shaft bolt -1- with washer -2- and shim -3-.
  - Tightening torque: 30 Nm (22 ft lb)

Note:

- *Install shim -3- onto small drive shaft shoulder (arrow).*
- *Determining shim thickness* ⇒ *page 37-80* , *Planet carrier, adjusting.*

- Carry out planet carrier check measurement.

⇒ page 37-86 .

37-74

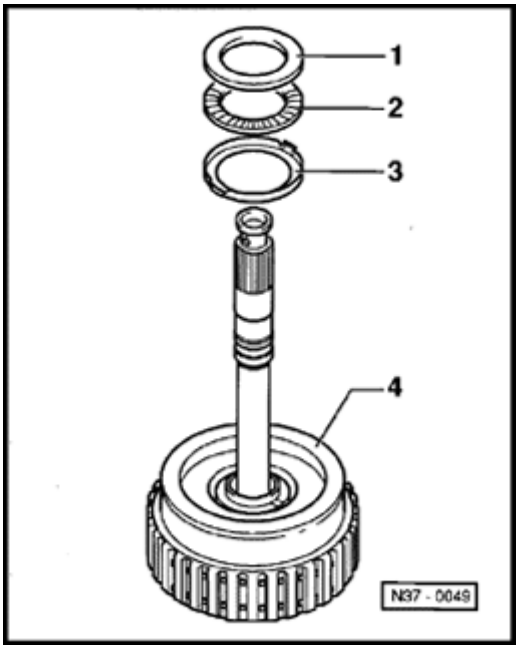

- Install axial needle bearing with washers in 4th gear clutch -K3-.

1 - Axial needle bearing washer

2 - Axial needle bearing

3 - Axial needle bearing washer

- Install with smooth side facing -K3-.

4 - 4th gear clutch -K3-

Note:

Make sure that piston rings seat correctly.

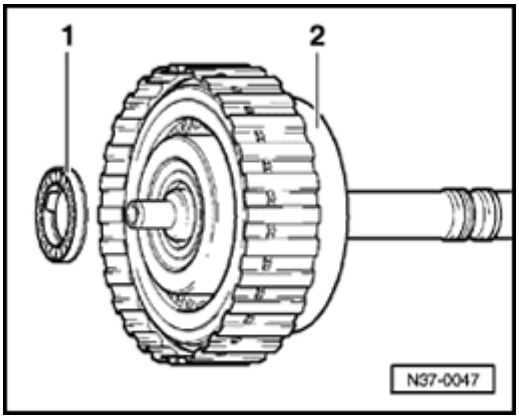

- Install axial needle bearing with washer on 4th gear clutch -K3-.

1 - Axial needle bearing with washer

- Moisten axial needle bearing washer with ATF so that bearing -1-, while installing, sticks to -K3-.

- Install bearing washer on -K3-.

2 - 4th gear clutch -K3-

37-75

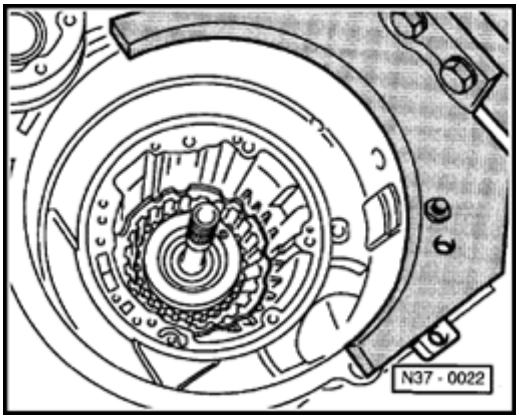

- Install 4th gear clutch -K3-.

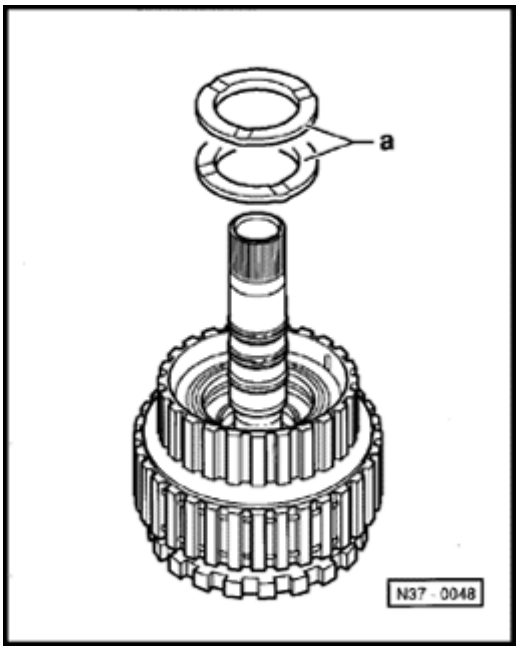

- Install shims -a- in -K1-.

Notes:

- *Re-measure shim when replacing - 1-, - 2- or ATF pump ⇒ page 37-94 , Clutch play between - 1- and - 2-, adjusting.*
- *1 or 2 shims can be installed.*

37-76

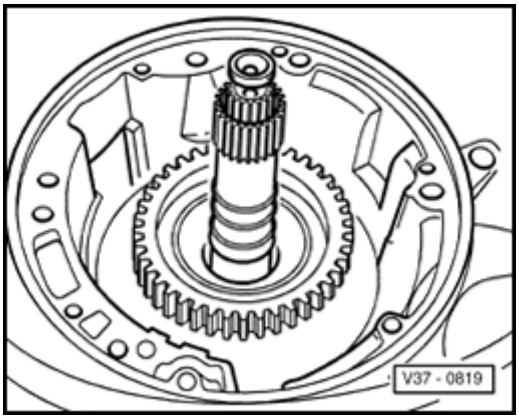

- Install 1st to 3rd gear clutch -K1-.
- Install reverse gear clutch -K2-.

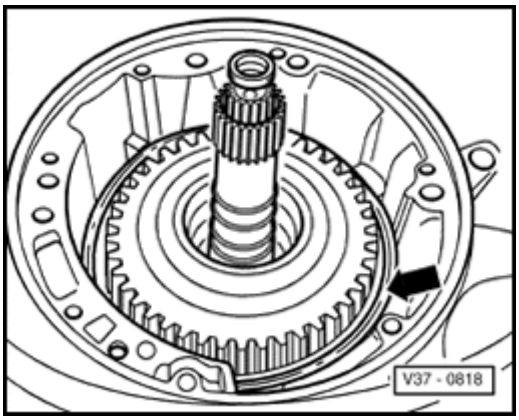

- Install supporting tube for plate set -B2- (arrow) so that supporting tube groove engages in free wheel wedge.

37-77

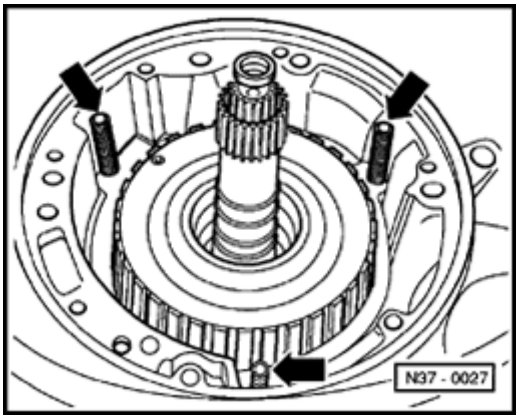

- Install -B2- plates as follows:
- First install a 3 mm (0.118 in.) thick outer plate.
- Install three spring caps in outer plate.
- Install compression springs (arrows).
- Install all but the last outer plate.

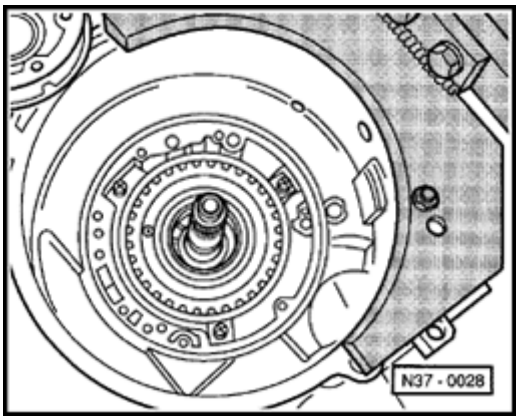

- Before installing the last outer plate, install three spring caps onto compression springs.

Note:

When replacing:

- *Supporting tube*
- *the ATF pump*
- *or the plates*

... the 2nd and 4th gear brakes -B2- are to be adjusted, ⇒ *page 37-101* .

37-78

- Replace corrugated washer.

- Replace ATF pump seal.

- Install O-ring on ATF pump.

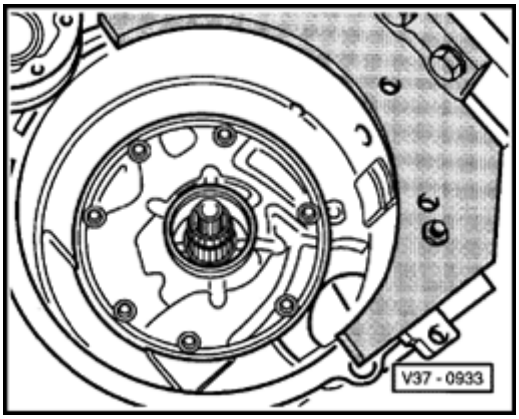

- Install ATF pump.
- Tighten bolts evenly, alternating cross-wise.
  - Tightening torque: 8 Nm (71 in lb) plus an additional $^{1}/_{4}$ -turn (90 °)

Note:

- *Additional $^{1}/_{4}$ -turn can be done in several stages.*
- *Make sure that the O-ring is not damaged.*

- Carry out check measurement of clutch play ⇒ page 37-100 .
- Install sealing plugs, valve body and oil pan ⇒ page 38-22 .
- Install cover with gasket and spacer bushings.

37-79

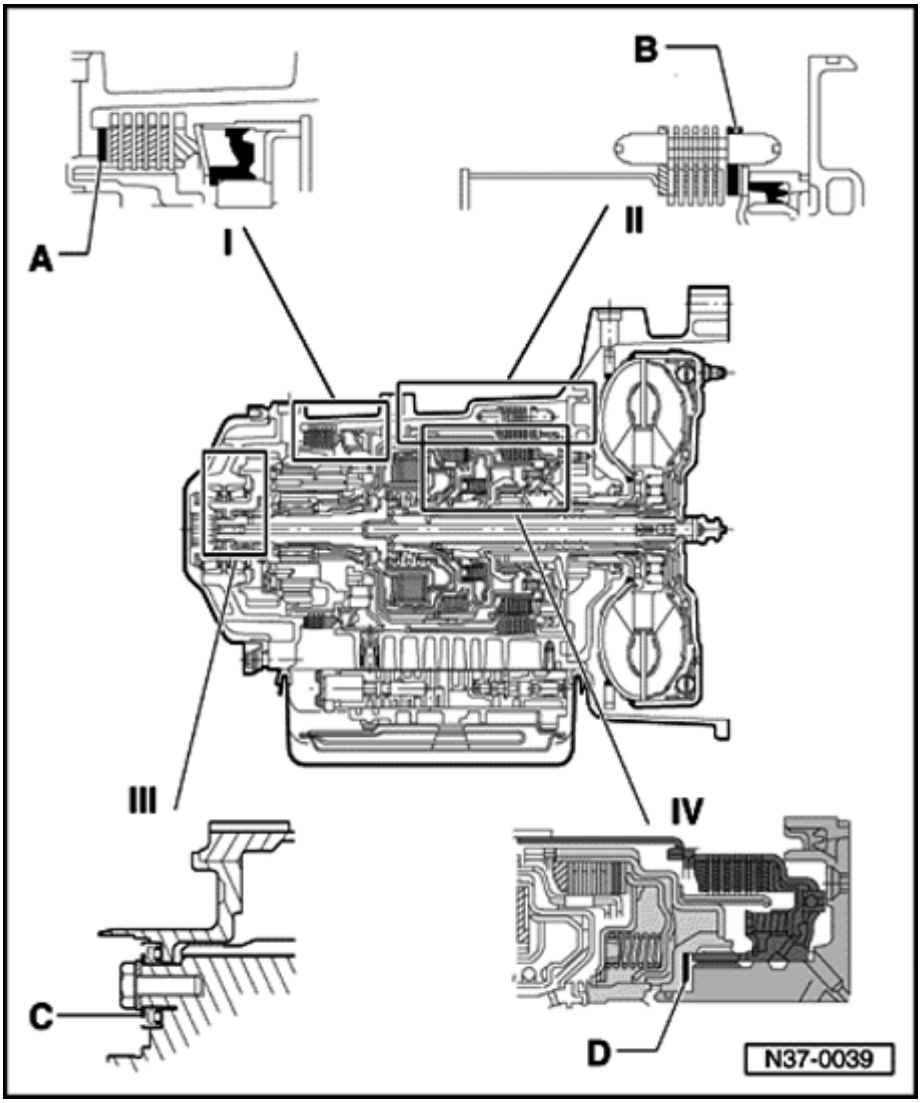

Planetary gearbox adjustments, overview

I - Reverse gear brake -B1-

- A = Shim
- Determining thickness ⇒ Reverse gear brake -B1-, adjusting, page 37-87

II - 2nd and 4th gear brake -B2-

- B = Outer plate
- Determining thickness ⇒ page 37-101 , 2nd and 4th gear brake -B2-, adjusting

III - Planet carrier

- C = Shim
- Determining thickness ⇒ page 37-80 , Planet carrier, adjusting

IV - Clutch play

- D = Shim
- Determining thickness ⇒ page 37-94 , Clutch play between -K1- and -K2-, adjusting

37-80

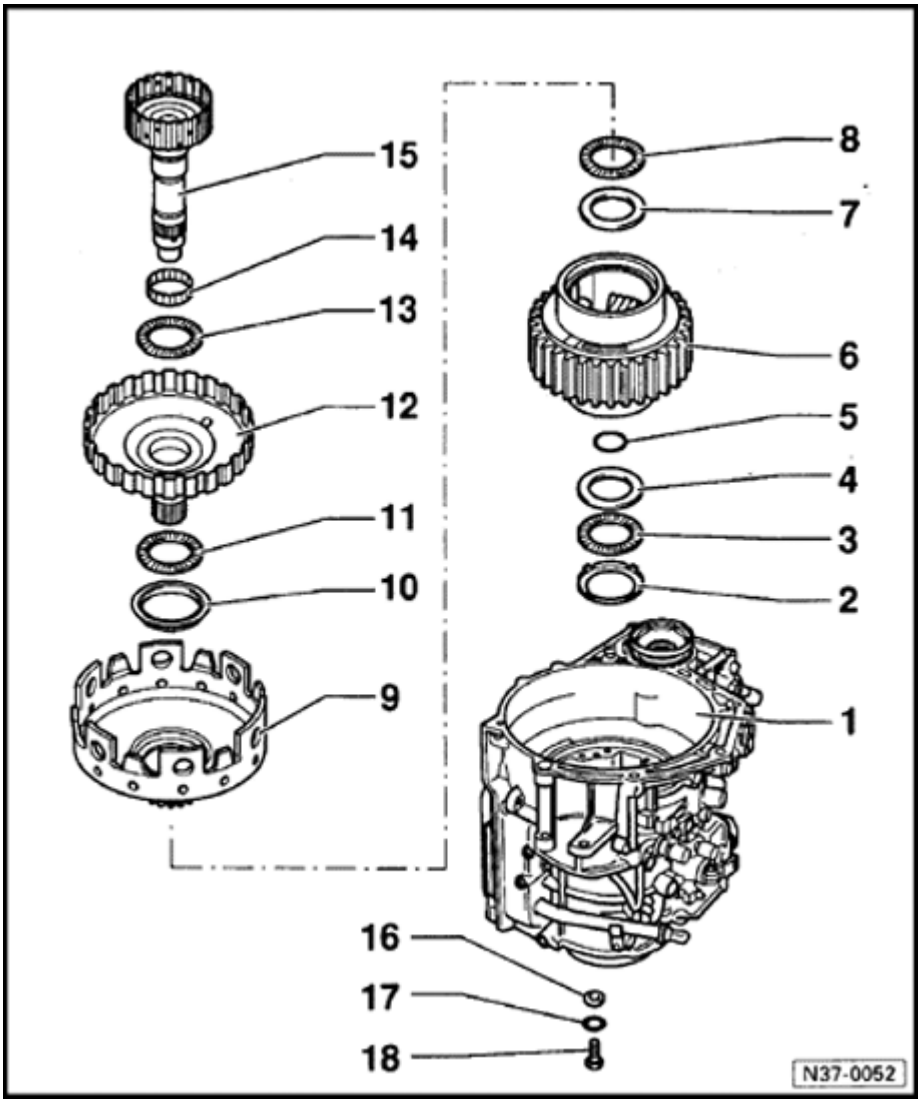

Planet carrier, adjusting

Overview of components to adjust planet carrier

- When adjusting planet carrier, install components in transmission housing without shim - 16 -.

1 - Transmission housing

- With input gear and axial needle bearing
- Axial needle bearing remains in input gear
- Damaged axial needle bearing ⇒ page39-8 , Input gear, removing and installing

2 - Axial needle bearing washer

- Insert smooth side in input gear

3 - Axial needle bearing

4 - Axial needle bearing washer

5 - O-ring

- Insert into planet carrier ⇒ page 37-67 , Planetary gearbox, assembling

37-81

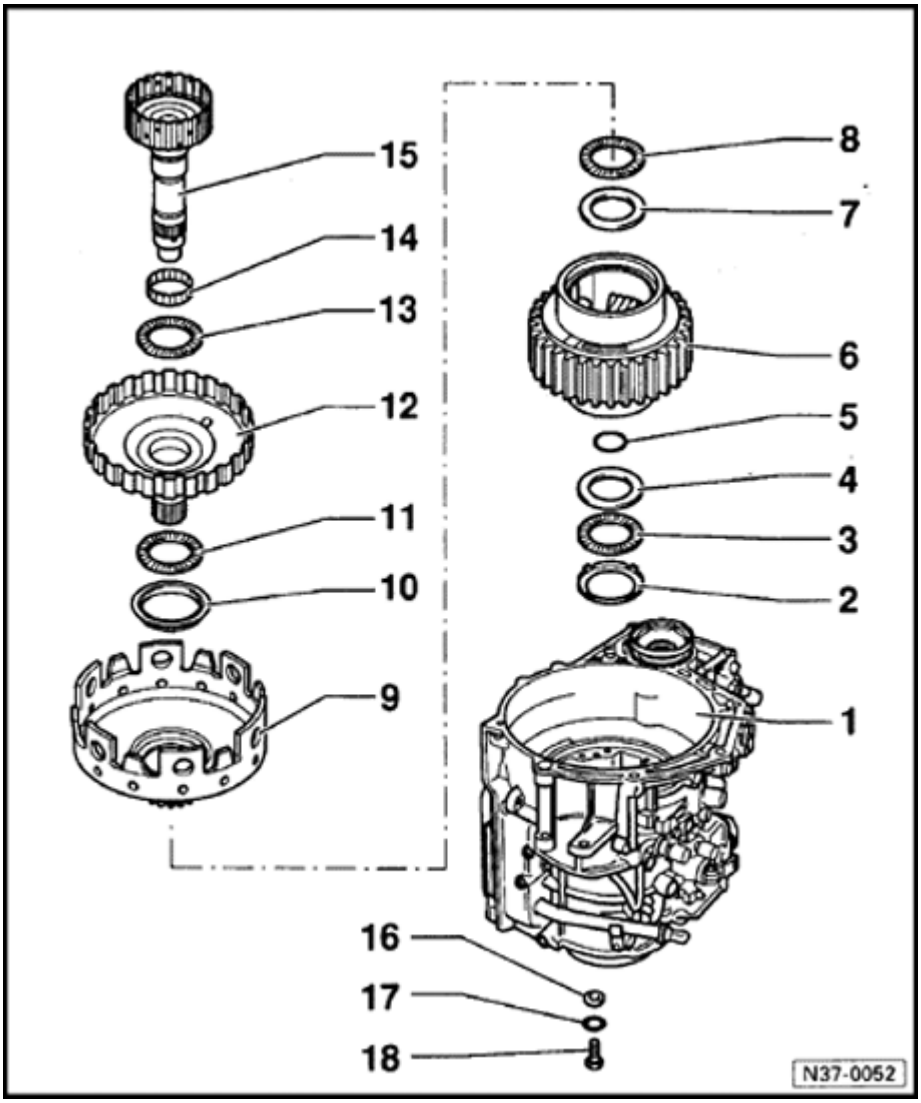

6 - Planet carrier

7 - Washer

8 - Axial needle bearing

9 - Large sun gear

10 - Washer

- Insert into large sun gear ⇒ page 37-67 , Planetary gearbox, assembling

11 - Axial needle bearing

12 - Large drive shaft

13 - Axial needle bearing

14 - Needle bearing

15 - Small drive shaft

16 - Shim

- Do not install in planet carrier when adjusting

17 - Washer

18 - Small drive shaft bolt

- Tightening torque: 30 Nm (22 ft lb)

37-82

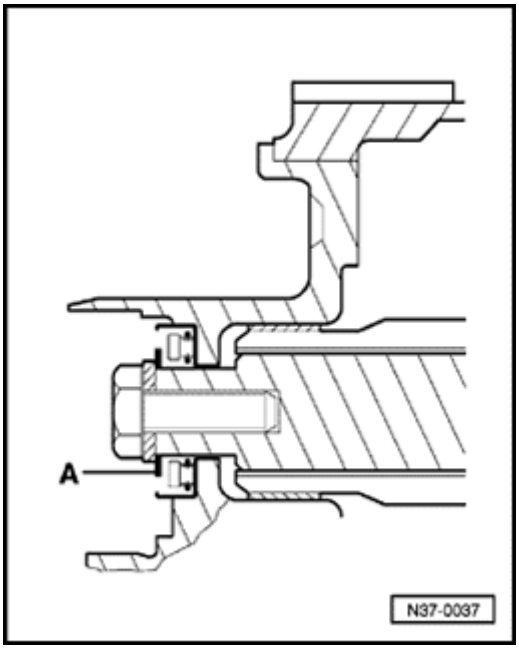

Determining shim -A- thickness

- Install all components to adjust planet carrier in transmission housing.

⇒ page 37-80 , items - 2 - through - 15 -.

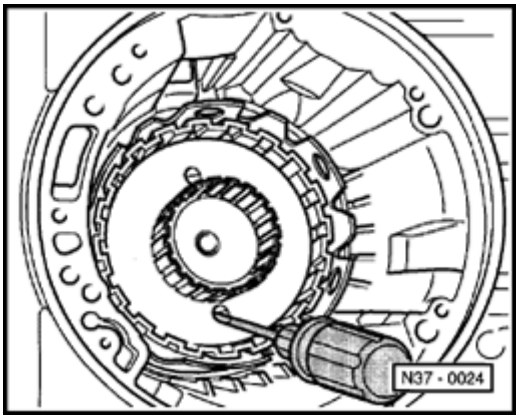

- Insert screwdriver through hole of large drive shaft and large sun gear to loosen and tighten bolt for small drive shaft.

37-83

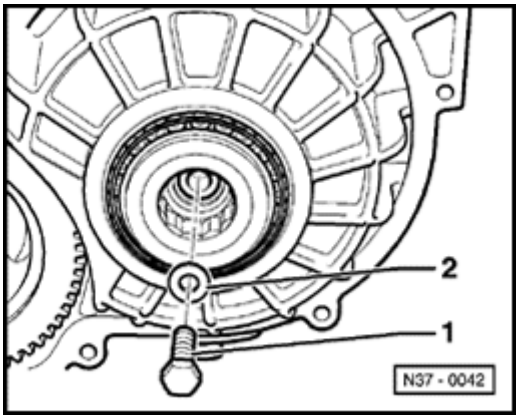

- Install small input shaft bolt -1- with washer -2-, but without shim.
  - Tightening torque: 30 Nm (22 ft lb)

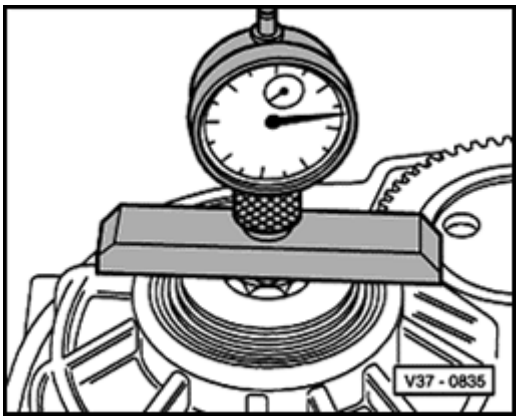

- Set up dial indicator so that top of gauge is positioned on center of bolt head with 1 mm preload.
- Zero dial gauge.
- Move small input shaft up and take measurement.
  - Example: measurement = 2.00 mm
- Specify thickness of shim according to table and determine Part No. from parts catalog microfiche.

37-84

Table of shims

Dial indicator measurement - mm	Shim thickness - mm
1.26 - 1.35	1.0
1.36 - 1.45	1.1
1.46 - 1.55	1.2
1.56 - 1.65	1.3
1.66 - 1.75	1.4
1.76 - 1.85	1.5
1.86 - 1.95	1.6
1.96 - 2.05	1.7
2.06 - 2.15	1.8
2.16 - 2.25	1.9
2.26 - 2.35	2.0
2.36 - 2.45	2.1
2.46 - 2.55	2.2
2.56 - 2.65	2.3
2.66 - 2.75	2.4
2.76 - 2.85	2.5
2.86 - 2.95	2.6
2.96 - 3.05	2.7
3.06 - 3.15	2.8
3.16 - 3.25	2.9

37-85

Example:

Measurement = 2.00 mm:

- Insert 1.7 mm shim.

- Remove small input shaft bolt.

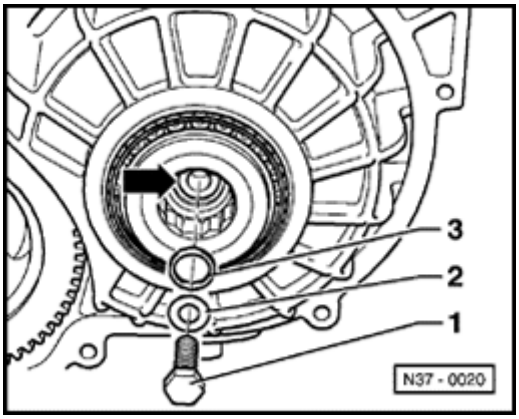

- Install correct shim -3- on small input shaft (arrow).
- Tighten small input shaft bolt -1- with washer -2-.
  - Tightening torque: 30 Nm (22 ft lb)
- Carry out planet carrier check measurement.

⇒ page 37-86 .

37-86

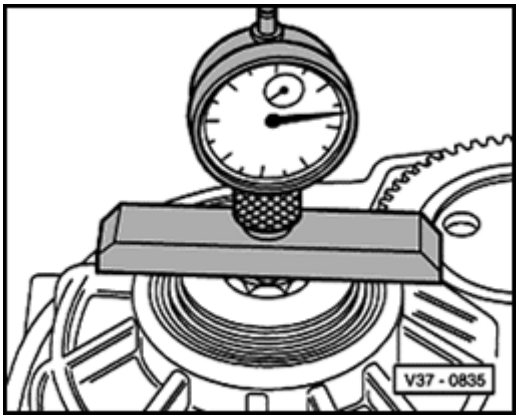

Planet carrier check measurement

- Insert dial indicator in VW 382/7 measuring bar and place the tip on the small input shaft bolt.
- Move small input shaft up and down and measure axial play on dial indicator.

Specifications:

- min. = 0.23 mm (0.0091 in.)
- max. = 0.37 mm (0.0146 in.)

Note:

If the planet carrier has been adjusted with reverse gear brake -B1- and free wheel removed, then install reverse gear brake -B1- before installing planet carrier ⇒ *Planetary gearbox, assembling, page 37-67* .

37-87

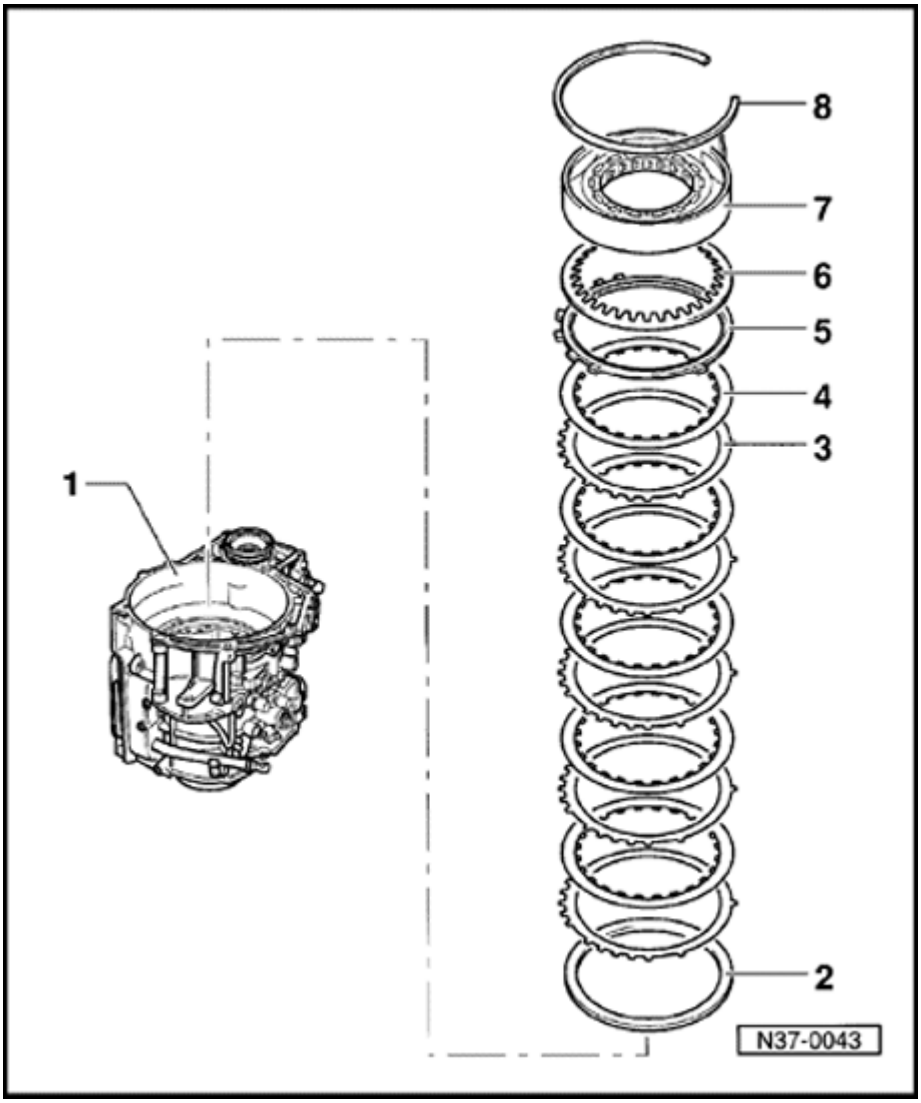

Reverse gear brake -B1-, adjusting

Overview of components to adjust reverse gear brake -B1-

1 - Transmission housing

2 - Shim

3 - Outer plate -B1-

- Quantity ⇒ from page 00-3

4 - Inner plate -B1-

- Quantity ⇒ from page 00-3

5 - Pressure plate -B1-

- Install with flat side facing plates
- Differing thicknesses depending on number of inner plates installed:Thickness with 4 inner plates: 13.5 mm (0.531 in.) Thickness with 5 inner plates 10.5 mm (0.413 in.)
- Quantity of -B1- inner plates ⇒ from page 00-3

37-88

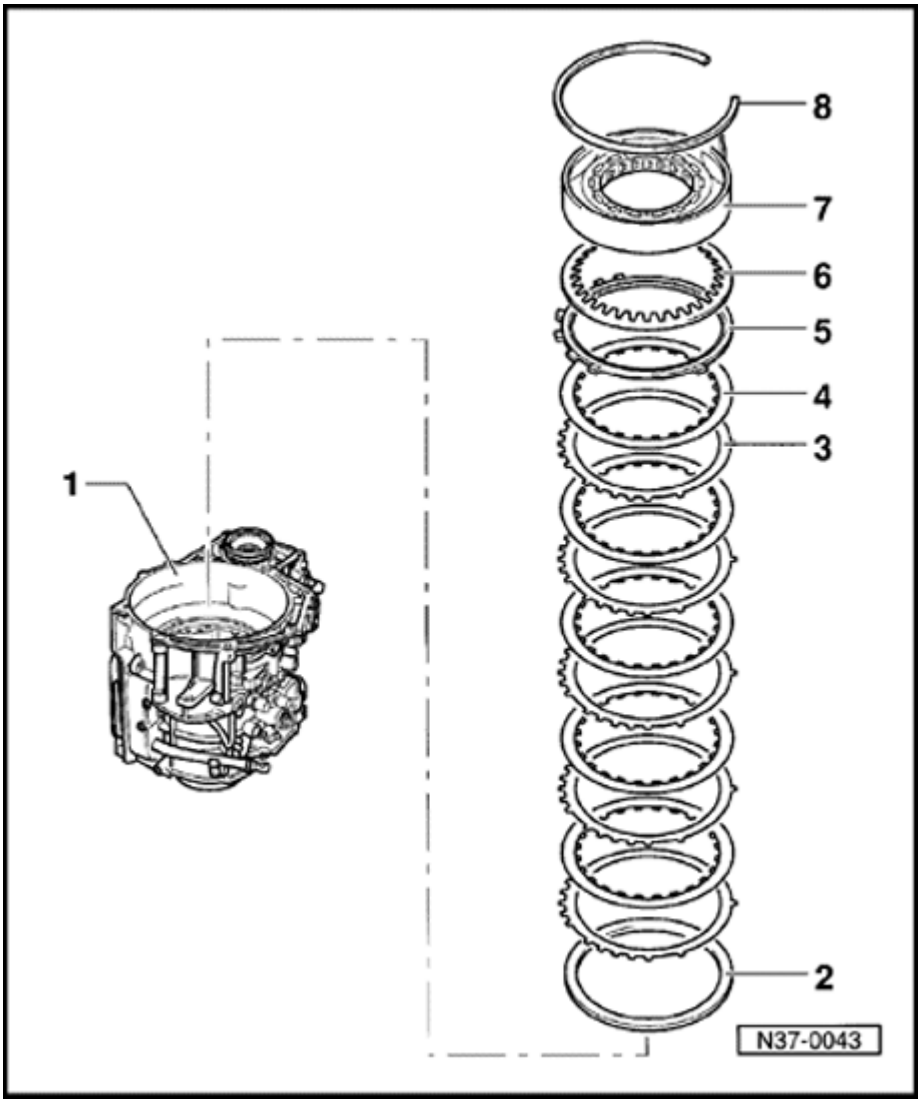

6 - Dished washer

- Convex side faces towards free wheel

7 - Free wheel with -B1- piston

Note:

Before removing or installing free wheel remove valve body and take out sealing plugs ⇒ page 38-22 .

8 - Circlip

37-89

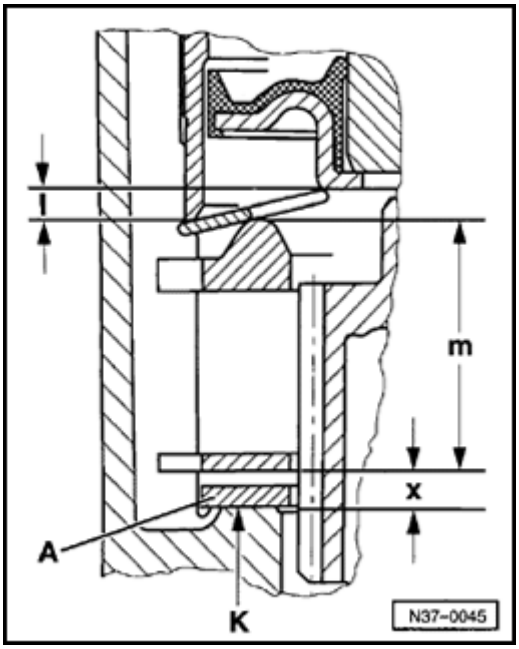

Determining shim -A- thickness

Shim thickness is determined by gap -x- and shim is selected from table ⇒ page 37-92 .

Gap x = k + $^1/_2$ - m

A - Shim

x - Gap

l - Position of piston in free wheel

m - Height of plate set including thrust plate

K - Constant = 26.8 mm

- Constant is determined by installation height in transmission housing and is not adjustable.

37-90

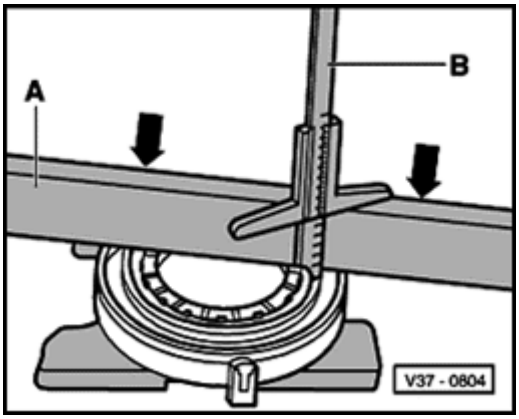

Calculating free wheel piston position l :

- Press piston in direction of arrows as far as stop.
- Place straightedge -A- onto outer race of free wheel.
- Measure to inner edge of piston with depth gauge -B-.

Example:

Measurement	=	51.8 mm
- Straightedge height	=	- 48.2 mm
Calculated dimension "l"	=	3.6 mm

37-91

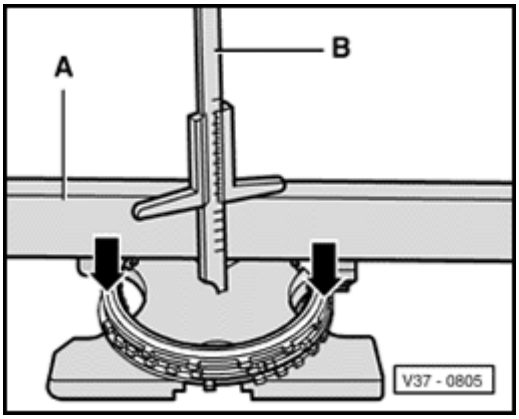

Calculating plate set height m :

- Place straightedge "A" on thrust plate.
- Compress set of plates including pressure plate in direction of arrows and measure the thickness of plate set with depth gauge "B".

Example:

Measurement	=	73.5 mm
- Straightedge height	=	- 48.2 mm
Calculated dimension "m"	=	25.3 mm

Gap x = k + $^{1}/_{2}$ - m

= 26.8 + $^{3.6}/_{2}$ - 25.3 = 3.3 mm

- Determine size of shims according to table.

Table of shims

Gap x - mm	Shim thickness - mm
2.36 - 2.45	1.0
2.46 - 2.55	1.1
2.56 - 2.65	1.2
2.66 - 2.75	1.3
2.76 - 2.85	1.4
2.86 - 2.95	1.5
2.96 - 3.05	1.6
3.06 - 3.15	1.7
3.16 - 3.25	1.8
3.26 - 3.35	1.9
3.36 - 3.45	1.0 + 1.0
3.46 - 3.55	1.0 + 1.1
3.56 - 3.65	1.1 + 1.1
3.66 - 3.75	1.1 + 1.2
3.76 - 3.85	1.2 + 1.2
3.86 - 3.95	1.2 + 1.3
3.96 - 4.05	1.3 + 1.3
4.06 - 4.15	1.3 + 1.4
4.16 - 4.25	1.4 + 1.4

- Determine thickness of shims according to table and determine Part No. from parts catalog microfiche.

- After determining shim for -B1- carry out check measurement ⇒ page 37-93 .

37-93

Reverse gear brake -B1- check measurement

- Install parts up to free wheel and secure with circlip ⇒ Planetary gearbox, assembling, page 37-67 .

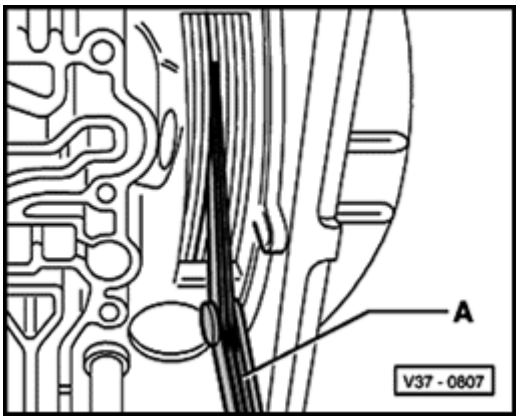

- Measure clearance between plates with feeler gauge -A-.

Specifications:

- minimum = 1.20 mm
- maximum = 1.80 mm

37-94

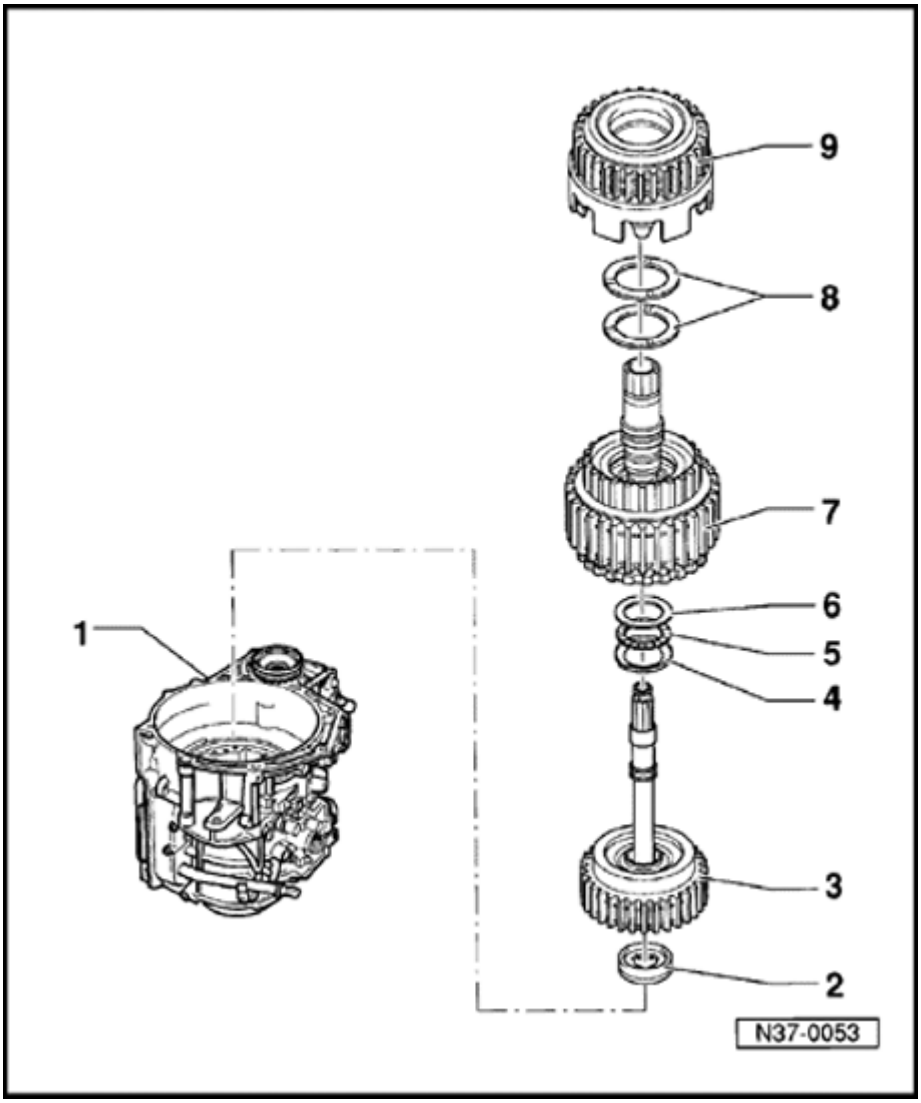

Clutch play between -K1- and -K2-, adjusting

- To adjust clutch play install components without shim - 8 - ⇒ Planetary gearbox, assembling, page 37-67 .

1 - Transmission housing

2 - Axial needle bearing with washer

- Axial needle bearing faces towards small input shaft
- Washer faces toward -K3-

3 - 4th gear clutch -K3- with pump shaft

4 - Axial needle bearing washer

- Lugs face toward axial needle bearing

37-95

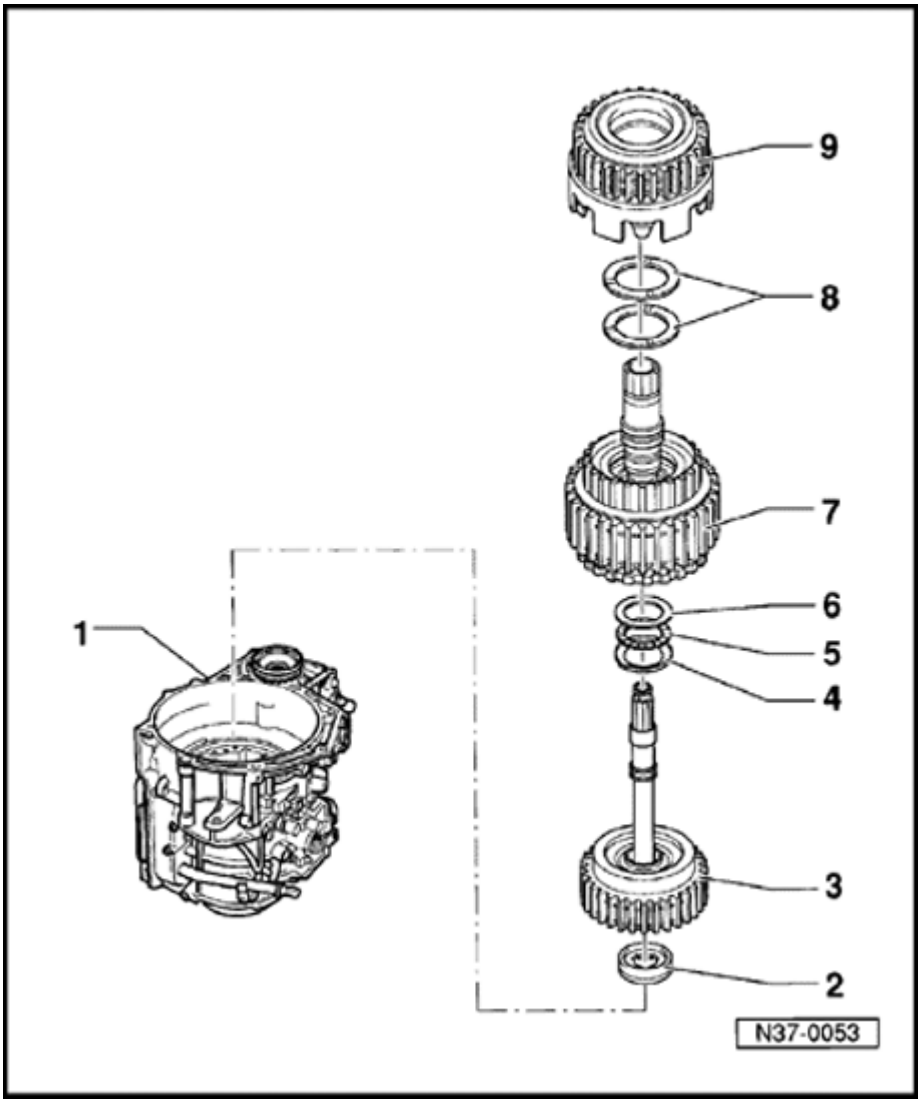

5 - Axial needle bearing

6 - Axial needle bearing washer

7 - 1st to 3rd gear clutch - K1- with turbine shaft

8 - Shim

- Do not install when adjusting clutch play
- 1 or 2 shims may be installed to achieve correct thickness

9 - Reverse gear clutch - K2-

37-96

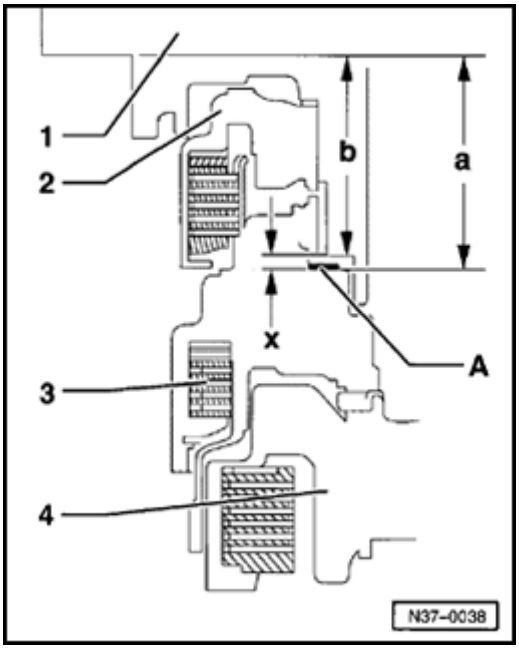

Determining shim -A- thickness

A - Shim

1 - ATF pump

2 - Reverse gear clutch -K2-

3 - 1st to 3rd gear clutch -K1-

4 - 4th gear clutch -K3-

- Determine gap "x" and calculate shim thickness.

Gap x = a - b

37-97

Calculating a :

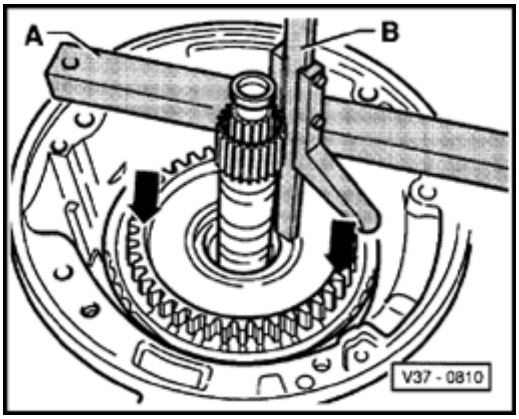

- Place straightedge -A- onto transmission housing.
- Press -K1- down in direction of arrow and measure distance into -K1- with depth gauge -B-.

Example:

Measurement 1 = 88.5 mm

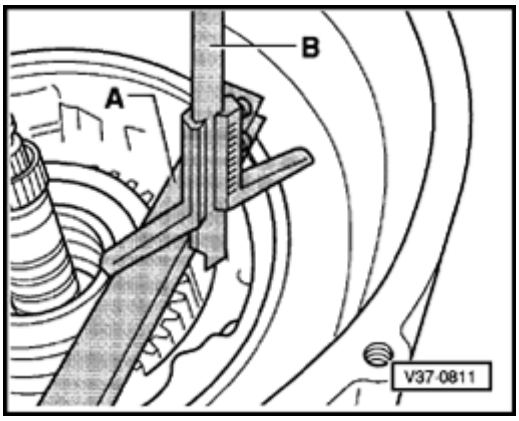

- Measure with depth gauge -B- to pump flange on transmission housing.

Example:

Measurement 2 = 34.3 mm

Measurement 1	=	88.5 mm
- Measurement 2	=	- 34.3 mm
Calculated dimension "a"	=	54.2 mm

= Dimension measured from pump flange/transmission housing into -K1-.

37-98

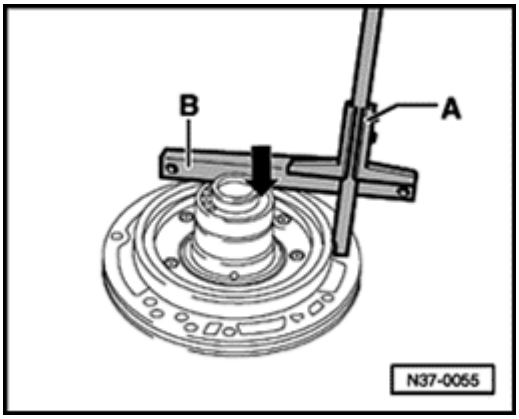

Calculating b :

- Place straightedge -B- onto stator support (arrow) and measure with depth gauge -A- to gasket of pump flange.

Example:

Measurement	=	70.5 mm
- Straightedge height	=	- 19.5 mm
Calculated dimension "b"	=	51.0 mm

Gap x = a - b

Gap x = 54.2 - 51.0 = 3.2 mm

37-99

- Determine shim size according to table.

Table of shims

Gap x - mm	Shim thickness - mm
- 2.54	1.4
2.55 - 3.09	1 + 1
3.10 - 3.49	1.2 + 1.2
3.50 - 3.89	1.4 + 1.4
3.90 - 4.29	1.6 + 1.6
4.30 - 4.69	1.8 + 1.8
4.70 - 5.04	1.2 + 1.2 + 1.6
5.05 - 5.25	1.2 + 1.2 + 1.8

- Determine thickness of shims according to table and determine Part No. from parts catalog microfiche.

- Carry out clutch play check measurement after installing ATF pump.

37-100

Check measurement (clutch play)

- The clutch play cannot be measured until the ATF pump has been installed.

- Attach dial indicator holder to transmission housing and place on turbine shaft with a 1 mm preload.

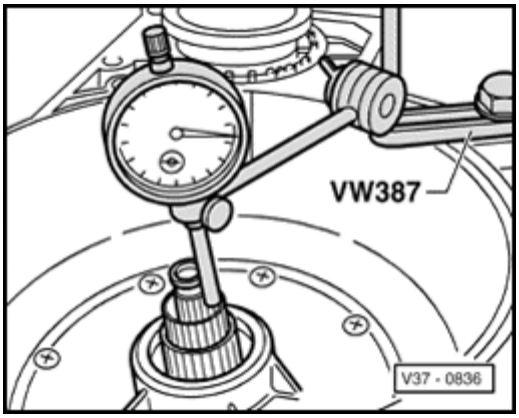

- Move turbine shaft up and down and read axial play on dial indicator gauge.

Specifications:

- minimum = 0.5 mm (0.020 in.)
- maximum = 1.2 mm (0.047 in.)

37-101

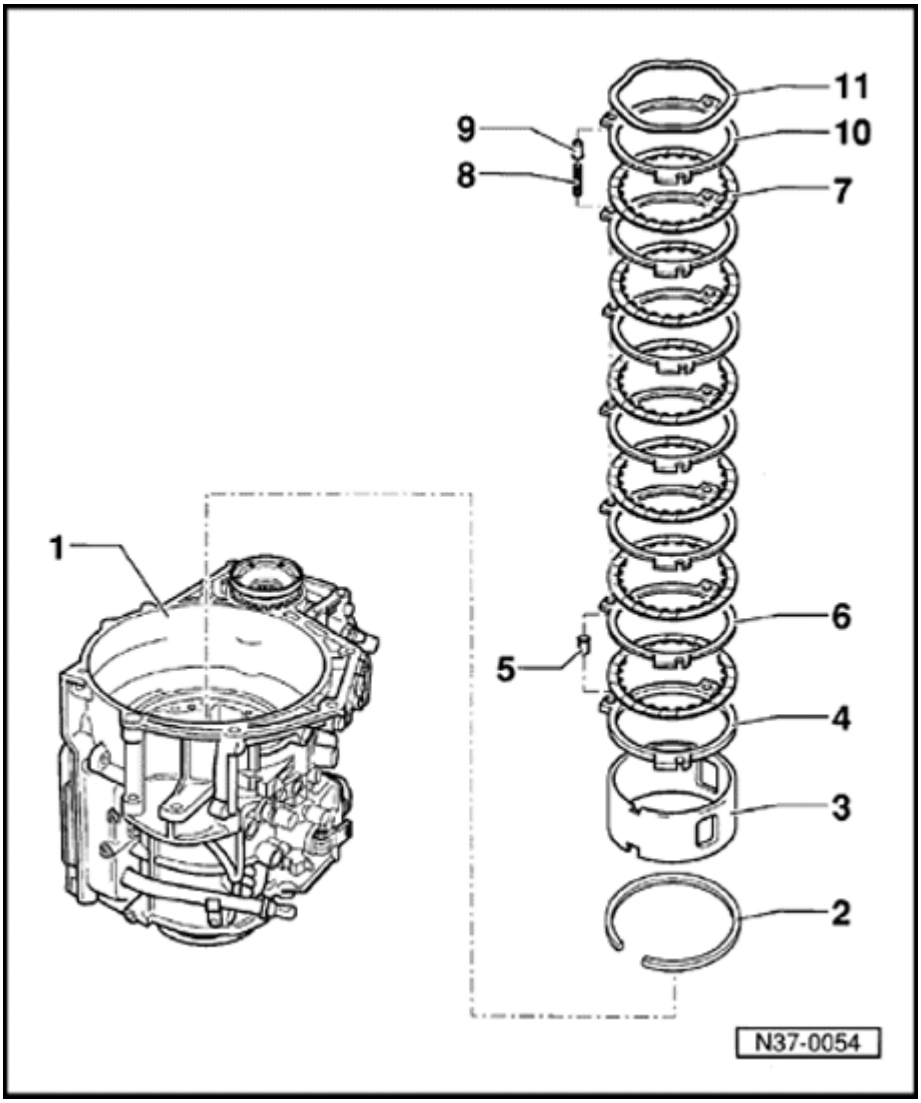

2nd and 4th gear brake - B2-, adjusting

- Install components to adjust 2nd and 4th gear brake -B2- but without corrugated washer - 11 - and last outer plate - 10 - ⇒ Planetary gearbox, assembling, page 37-67 .

1 - Transmission housing

2 - Circlip

- For supporting tube

3 - Supporting tube -B2-

- Length of -B2-:

4 inner plates	72.3 mm (2.847 in.)
5 inner plates	68.6 mm (2.701 in.)
6 inner plates	64.9 mm (2.555 in.)

- Quantity inner plates -B2- ⇒ from page 00-3
- Insert so that notch locates on free wheel wedge

37-102

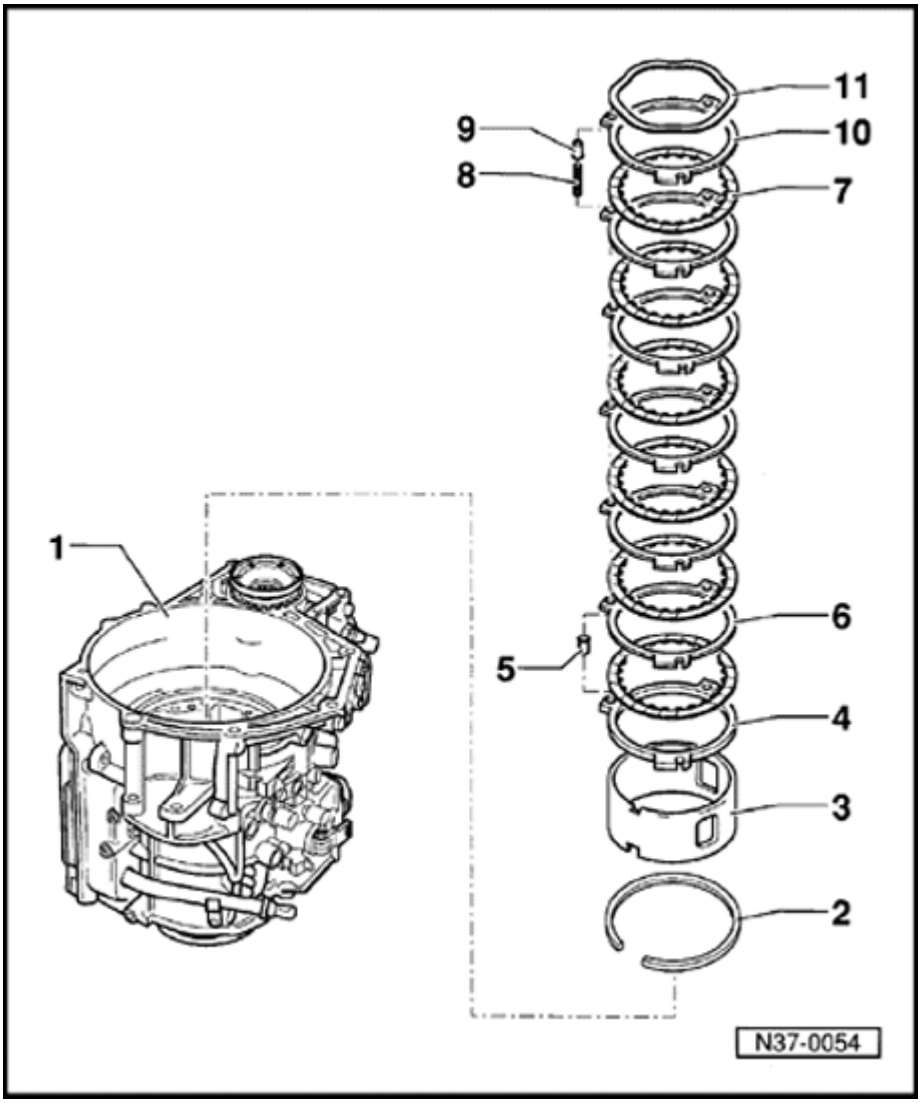

4 - Outer plate -B2-

- 3 mm thick

5 - Spring cap

- Install after installing first outer plate

6 - Outer plate -B2-

- Always install 2 mm thick outer plates
- Quantity ⇒ from page 00-3

37-103

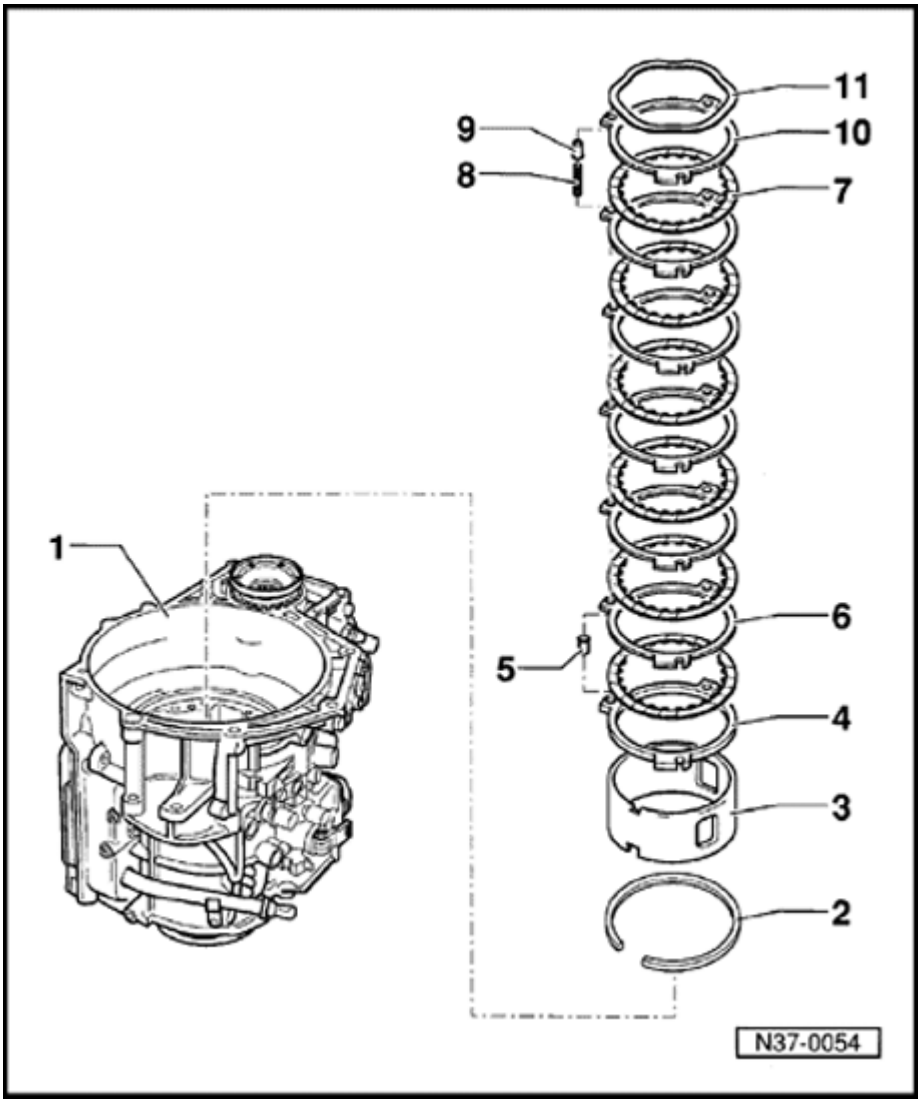

7 - Inner plate -B2-

- Quantity ⇒ from page 00-3

8 - Spring

9 - Spring cap

- Install before installing last outer plate

10 - Outer plate -B2-

- Do not install when adjusting -B2-
- 2 outer plates can be installed.

11 - Corrugated washer

- Do not install when adjusting -B2-

37-104

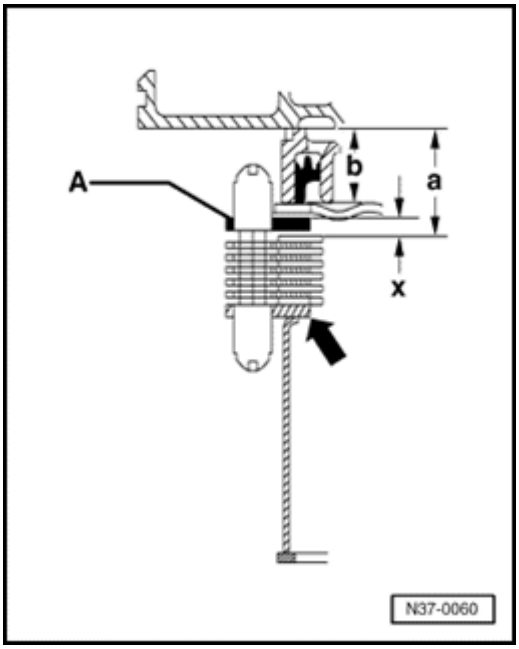

Calculating thickness of last outer plate -A-

The thickness of the outer plate is determined by gap "x" and is selected from table ⇒ page 37-106 .

Gap x = a - b - 3.6 mm

A - Outer plate

Note:

First outer plate (arrow) is always 3 mm thick.

37-105

Calculating a :

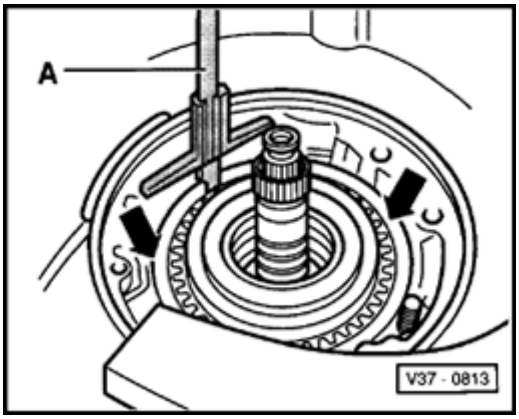

- Measure from pump flange/transmission housing to the last inner plate with depth gauge "A". Press inner plate down (in direction of arrow) for this step.

Example:

Measurement "a"	=	30.2 mm

Calculating b :

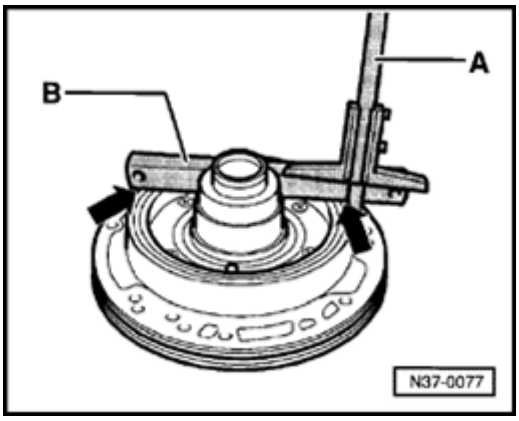

- Place straightedge "B" onto stator support (-arrow-) and measure with depth gauge "A" to gasket of pump flange.

Example:

Measurement	=	40.1 mm
- Straightedge height	=	- 19.5 mm
Calculated size "b"	=	20.6 mm

Gap x = a - b - 3.6mm

= 30.2 - 20.6 = 6.00 mm

37-106

- Determine thickness of outer plate according to table:

Table of plates

Gap x - mm	Plate thickness - mm
4.25 - 4.49	2.75
4.50 - 4.74	3.00
4.75 - 4.99	3.25
5.00 - 5.24	3.50
5.25 - 5.49	3.75
5.50 - 5.74	2.00 + 2.00
5.75 - 5.99	2.00 + 2.25
6.00 - 6.24	2.25 + 2.25
6.25 - 6.49	2.25 + 2.50
6.50 - 6.74	2.50 + 2.50
6.75 - 7.00	2.50 + 2.75

- Determine thickness of outer plate according to table and determine Part No. from parts catalog microfiche.

♦ Two outer plates can be installed if necessary to achieve the specified thickness.

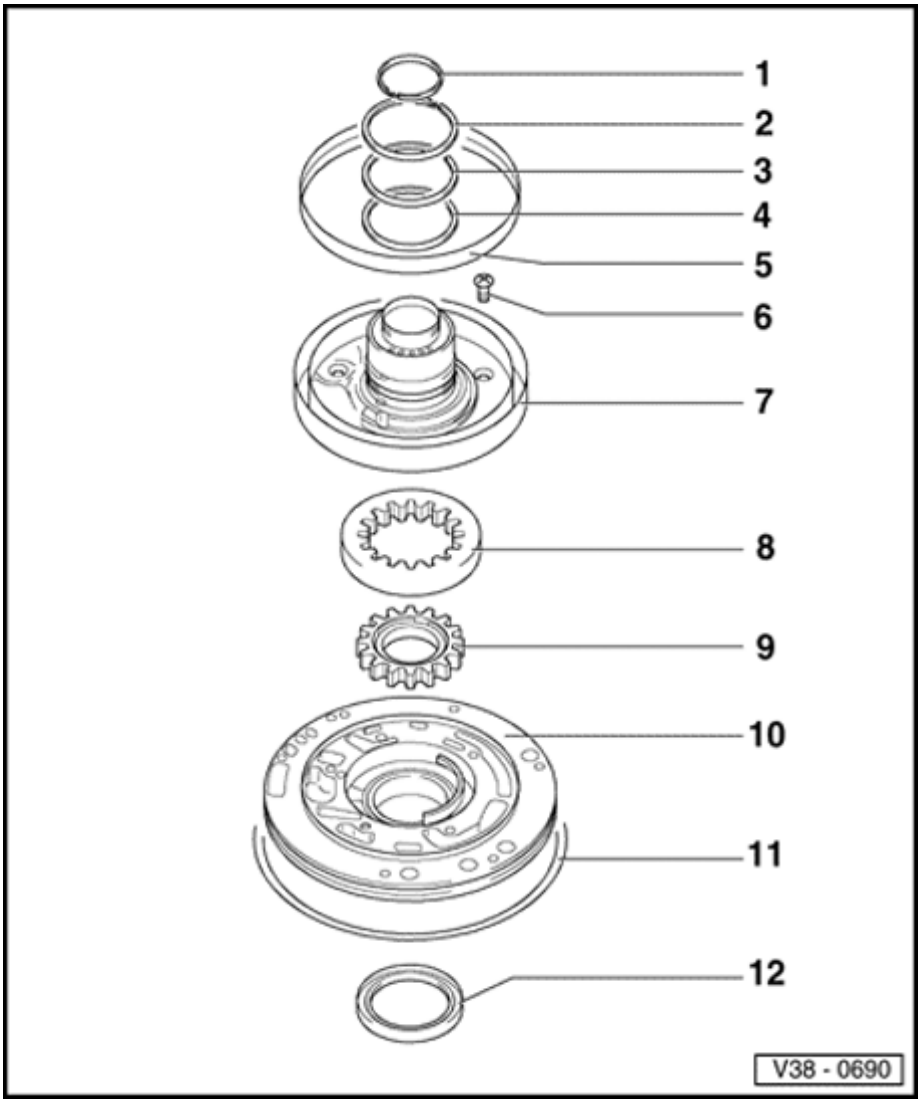

ATF pump, disassembling and assembling

1 - Piston ring

- Check that ring is correctly located ⇒ Fig. 1
- Installing ⇒ Fig. 2

2 - Piston ring

- Check that ring is correctly located ⇒ Fig. 1
- Installing ⇒ Fig. 2

3 - Piston ring

- Check that ring is correctly located ⇒ Fig. 1
- Installing ⇒ Fig. 2

4 - Thrust washer

5 - Piston

- Sealing lips are vulcanized to piston
- Moisten sealing lips with ATF before installing
- Turn piston slightly while installing

38-2

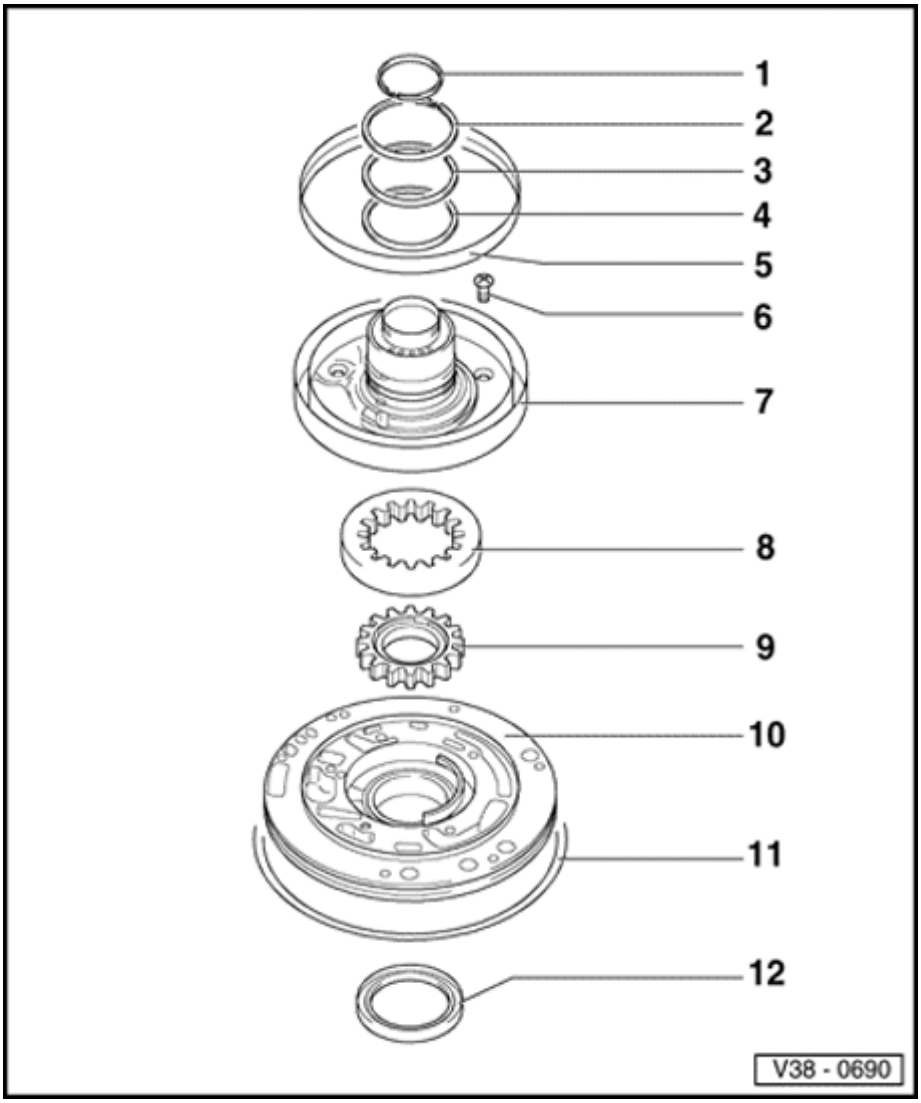

6 - Bolt

- Tightening torque: 10 Nm (7 ft lb) plusadditional $^{1}/_{8}$ -turn (45°)

7 - Stator support

8 - Outer gear

- Manufacturer s marking faces stator support
- If outer gear is incorrectly installed, ATF pump may not operate freely in the installed position

9 - Inner gear

- Larger groove faces stator support

10 - Housing for ATF pump

11 - O-ring

- Always replace

12 - Torque converter oil seal

- Removing and installing ⇒ page 32-4

38-3

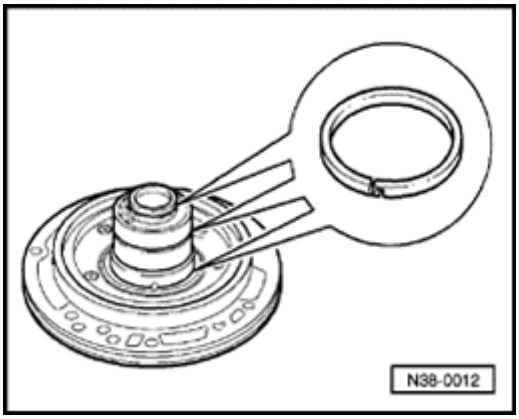

Fig. 1 Checking that piston rings are correctly located

- Make sure that ends of piston rings are hooked together.

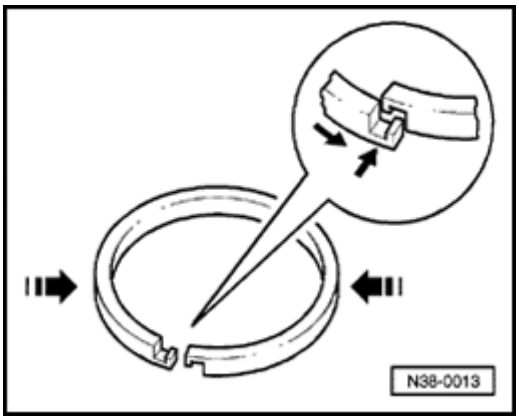

Fig. 2 Fitting and hooking ends of piston ring together

- Place piston ring in groove.
- To hook ends together press sides of ring in and guide ends over one another.
- Do not twist piston ring out of groove on one side.

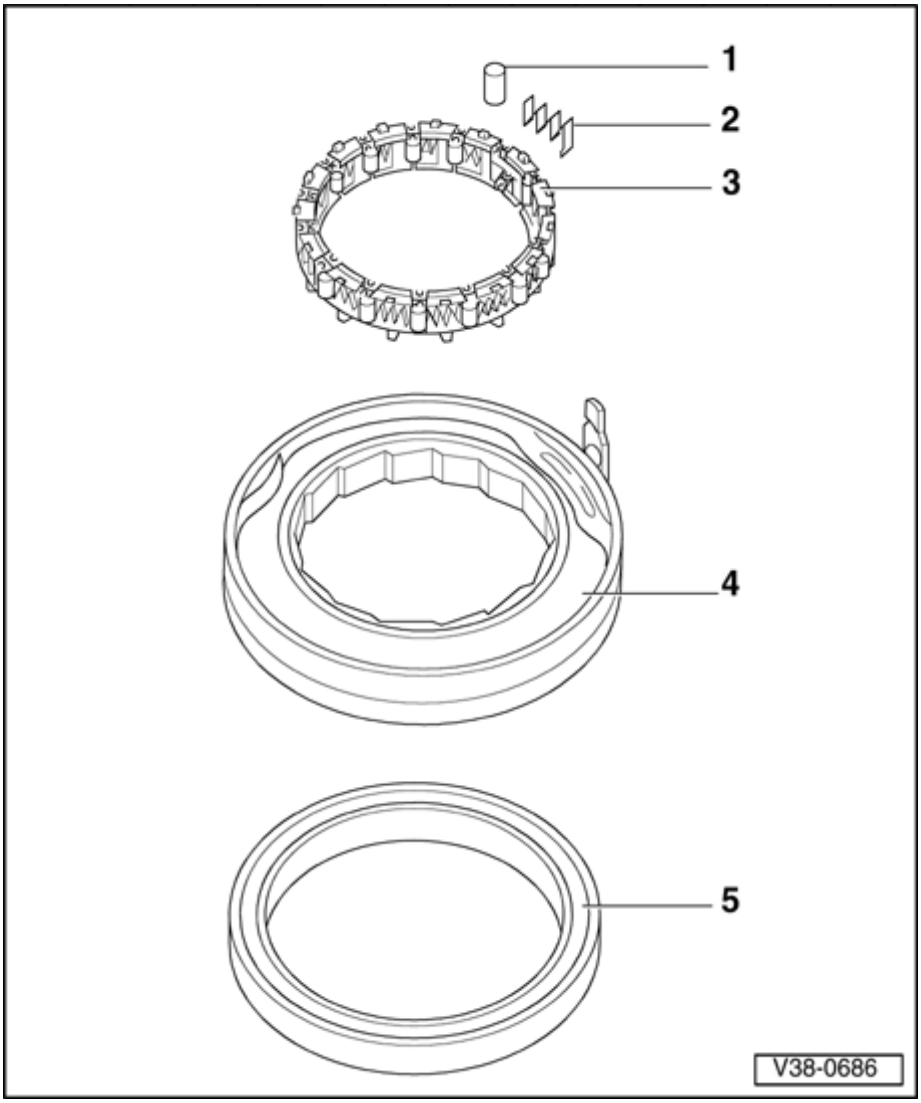

Free wheel with -B1- piston, disassembling and assembling

1 - Rollers

- Installing ⇒ Fig. 1

2 - Springs

- Installing ⇒ Fig. 1

3 - Cage

- Installing ⇒ Fig. 2
- Securing ⇒ Fig. 3

4 - Outer ring

5 - Piston

- Sealing lips are vulcanized to piston
- Moisten sealing lips with ATF before installing
- Turn piston slightly while installing
- Installed position ⇒ Fig. 4

38-5

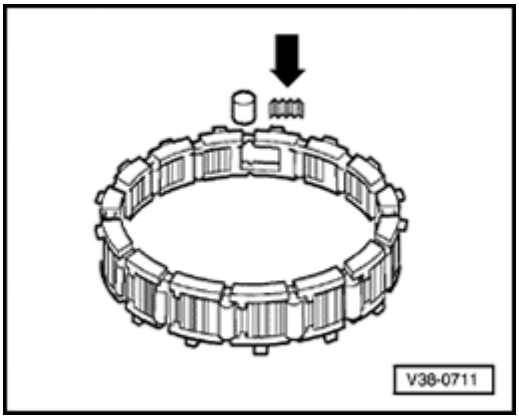

Fig. 1 Installing rollers and springs

- Install springs so that spring (arrow) engages in cage.

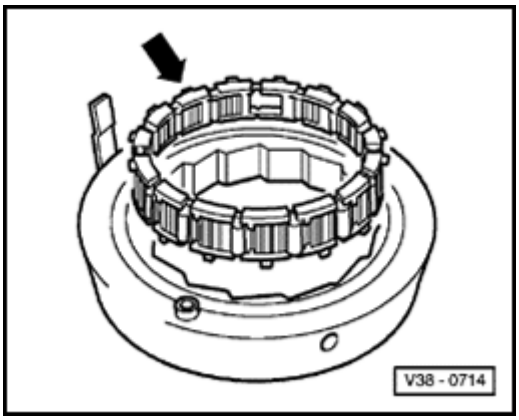

Fig. 2 Installing cage with springs and rollers

- Install with large lugs (arrow) facing up.

38-6

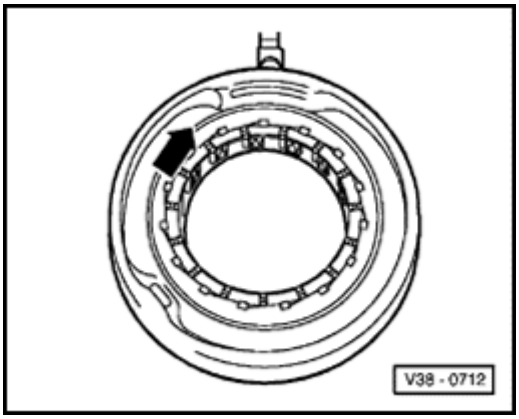

Fig. 3 Securing cage

- Secure cage by turning in direction of arrow as far as stop.

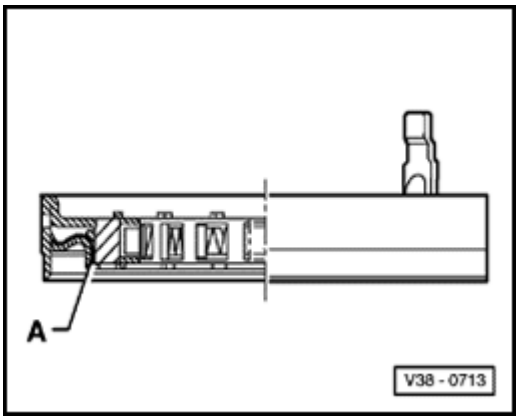

Fig. 4 Installed position of piston

- Install piston -A- as shown.

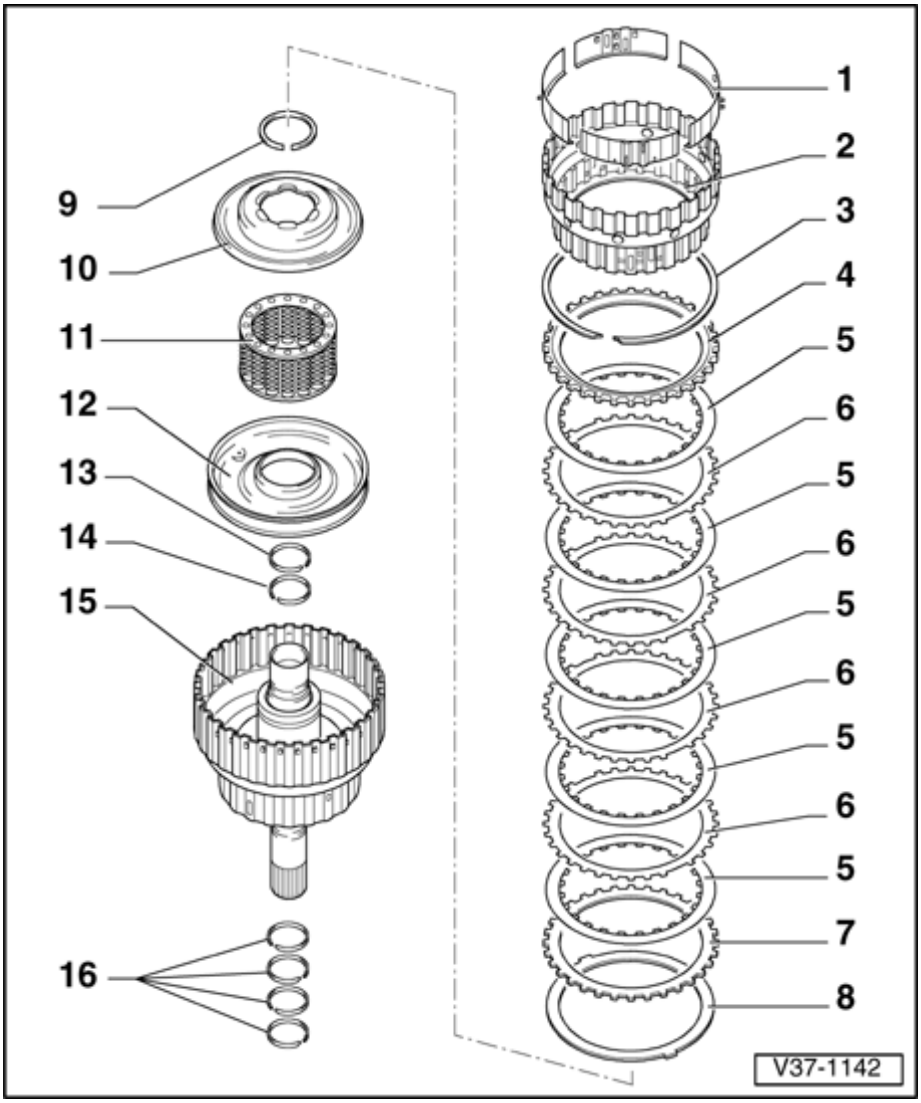

1st to 3rd gear clutch -K1- with turbine shaft, disassembling and assembling

1 - Supporting ring

- 4-piece, unclip from inner plate carrier
- Installing ⇒ Fig. 2

2 - Inner plate carrier

- Installing ⇒ Fig. 4
- Assembling ⇒ Fig. 2

3 - Circlip

- Different thicknesses for different clutch assemblies
- Mark after removing and install in same position

4 - Thrust plate

- Smooth side faces inner plate
- Install together with plate carrier ⇒ Fig. 2

5 - Inner plate

- Quantity ⇒ page 00-3
- Installing ⇒ Fig. 2

38-8

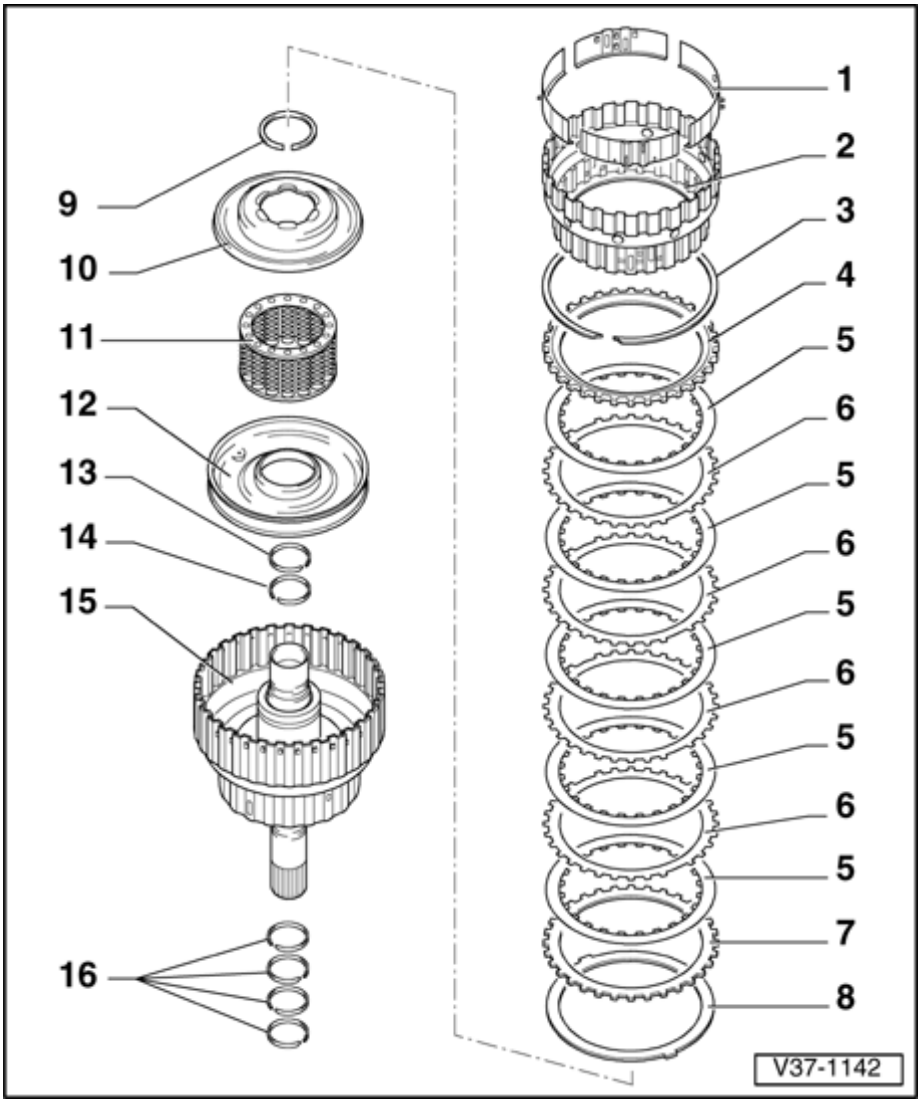

6 - Outer plate

- Quantity ⇒ page 00-3
- Installing ⇒ Fig. 2
- Always 1.5 mm thick

7 - Outer plate

- Always 2 mm thick
- Installing ⇒ Fig. 2

8 - Corrugated washer

9 - Circlip

- Removing and installing ⇒ Fig. 1

10 - Piston cap

- Sealing lips are vulcanized to cap
- Moisten sealing lips with ATF before installing
- Turn cap slightly while installing

11 - Intermediate spring ring

- With spring supporting shell and compression springs

38-9

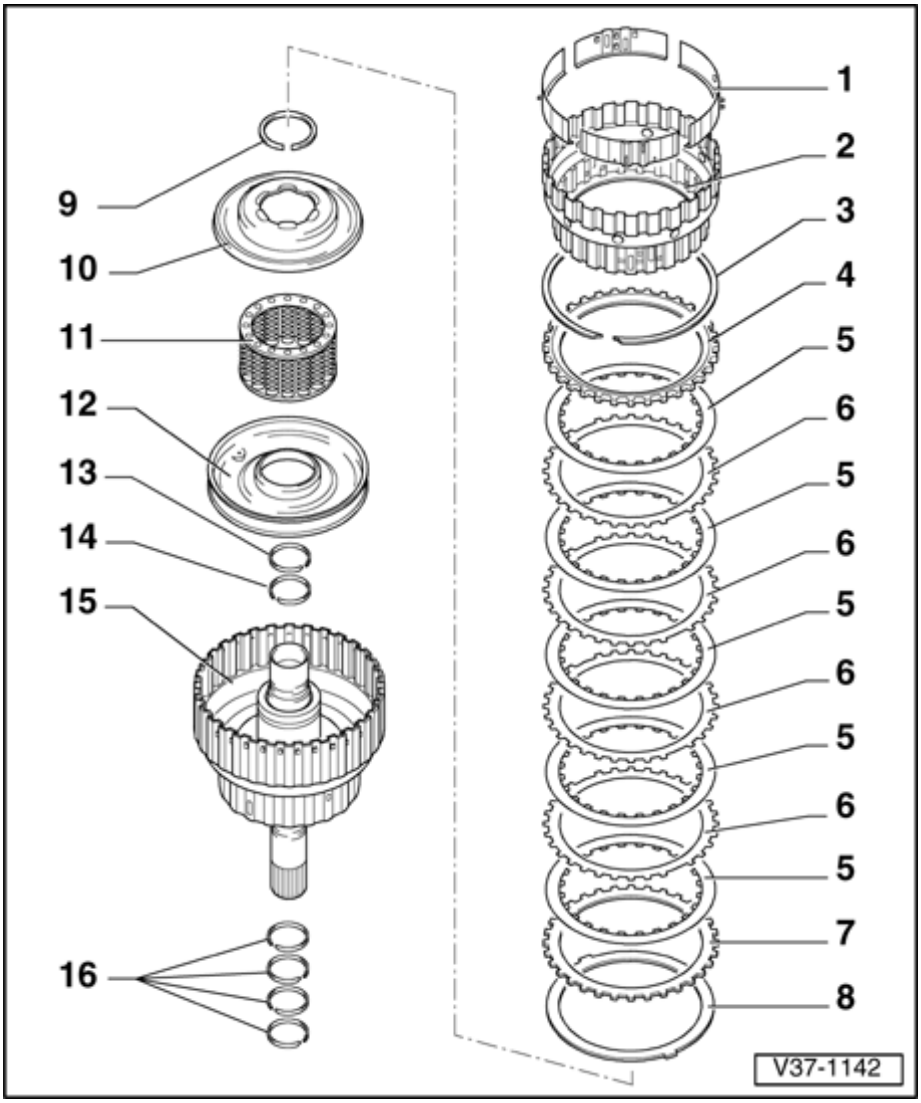

12 - Piston

- Sealing lips are vulcanized to piston
- Moisten sealing lips with ATF before installing
- Turn piston slightly while installing

13 - Piston ring (small diameter)

- Check that ring is correctly located ⇒ Fig. 5
- Installing ⇒ Fig. 6

14 - Piston ring

- Check that ring is correctly located ⇒ Fig. 5
- Installing ⇒ Fig. 6

15 - Clutch housing with turbine shaft

- Check bearing bushings. Replace housing if bushings are damaged.
- Before inserting inner plate carrier corrugated washer - 8 -, insert inner and outer plates in clutch ⇒ Fig. 3

16 - Piston ring

- Check that ring is correctly located ⇒ Fig. 5
- Installing ⇒ Fig. 6

38-10

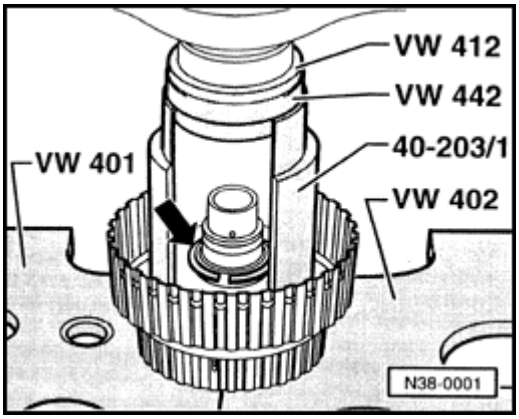

Fig. 1 Removing and installing circlip

- Press piston cap with intermediate spring ring down far enough for circlip (arrow) to be inserted in groove.

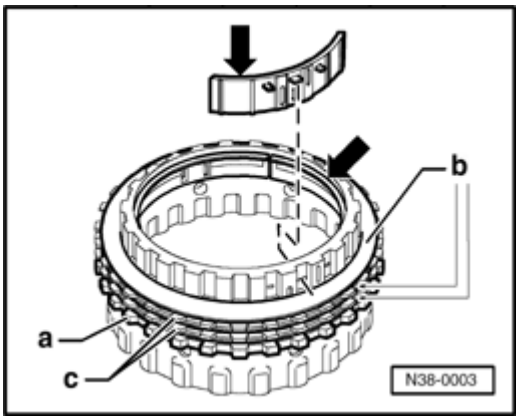

Fig. 2 Installing thrust plate and plates onto inner plate carrier

- Install thrust plate -a- with smooth side facing inner plate and stepped side toward inner plate carrier.
- Install 3 inner plates -b- and 2 outer plates -c-.
- Insert supporting ring with step (arrow) after installing thrust plate as well as inner and outer plates.

Note:

- *Locate locating lugs correctly.*
- *Installing corrugated washer and additional plates in clutch housing ⇒ Fig. 3 .*

38-11

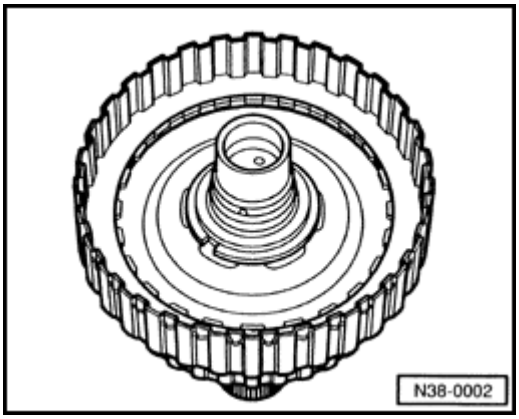

Fig. 3 Installing corrugated washer and inner and outer plates in clutch housing

- First insert corrugated washer.
- Insert 2 mm thick outer plate.
- Insert remaining inner and outer plates.

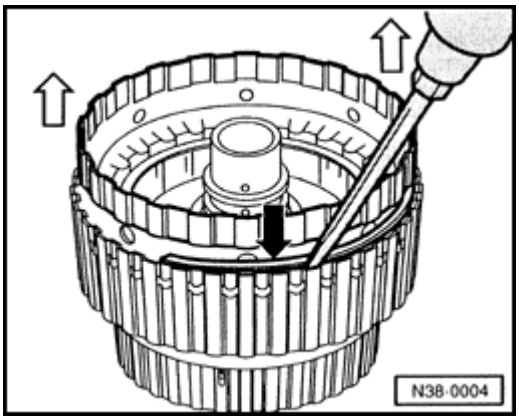

Fig. 4 Inserting inner plate carrier and installing circlip

- Lift inner plate carrier slightly to install circlip (arrow).

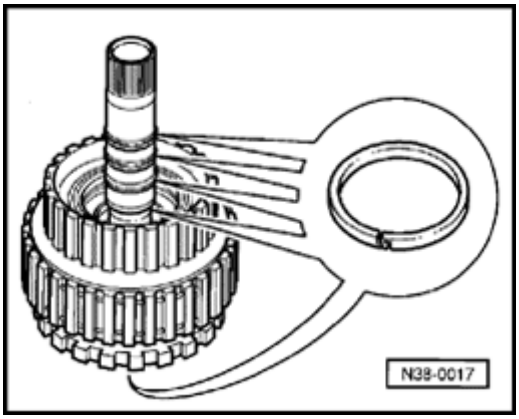

Fig. 5 Checking that piston rings are correctly located

There are two piston rings installed on the turbine shaft inside the clutch housing.

- Make sure that ends of piston rings are hooked together.

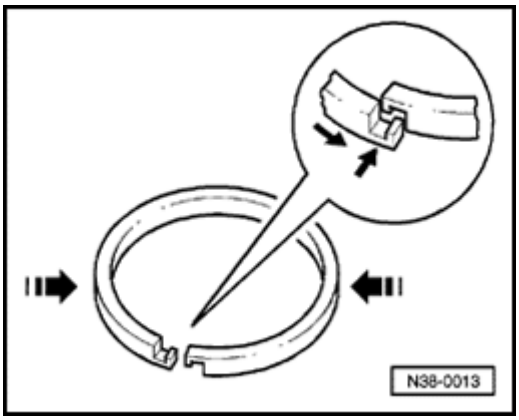

Fig. 6 Installing and hooking ends of piston ring together

- Place piston ring in groove.
- To hook ends together press sides of ring in and guide ends over one another.
- Do not twist piston ring out of groove on one side.

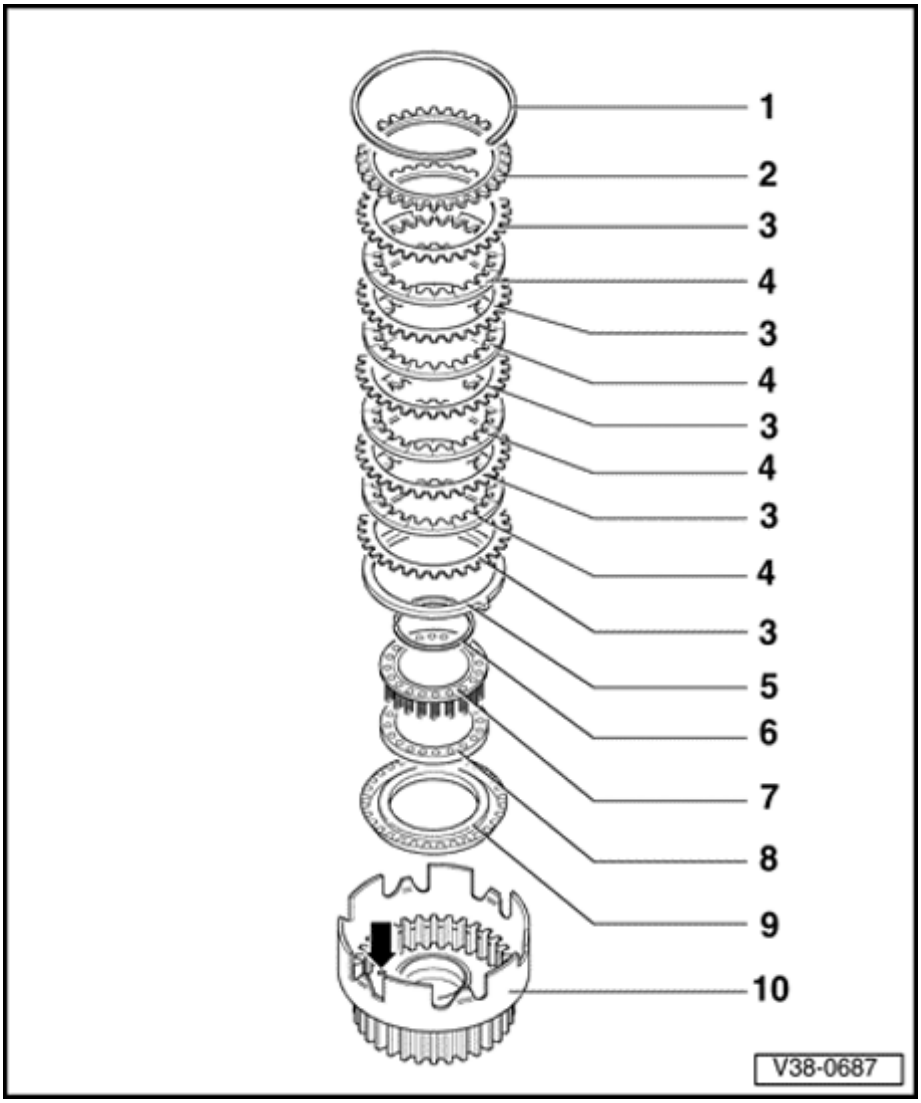

Reverse gear clutch -K2-, disassembling and assembling

Note:

When performing repairs to the clutch, make sure that the ball valve (arrow) is not damaged.

1 - Circlip

- Mark after removing and install in same position

2 - Thrust plate

- Smooth side facing inner plates
- Thickness with clutches of:

4 inner plates	6.5 mm (0.256 in.)
5 inner plates	4.9 mm (0.193 in.)

3 - Outer plate

- Quantity ⇒ page 00-3

38-14

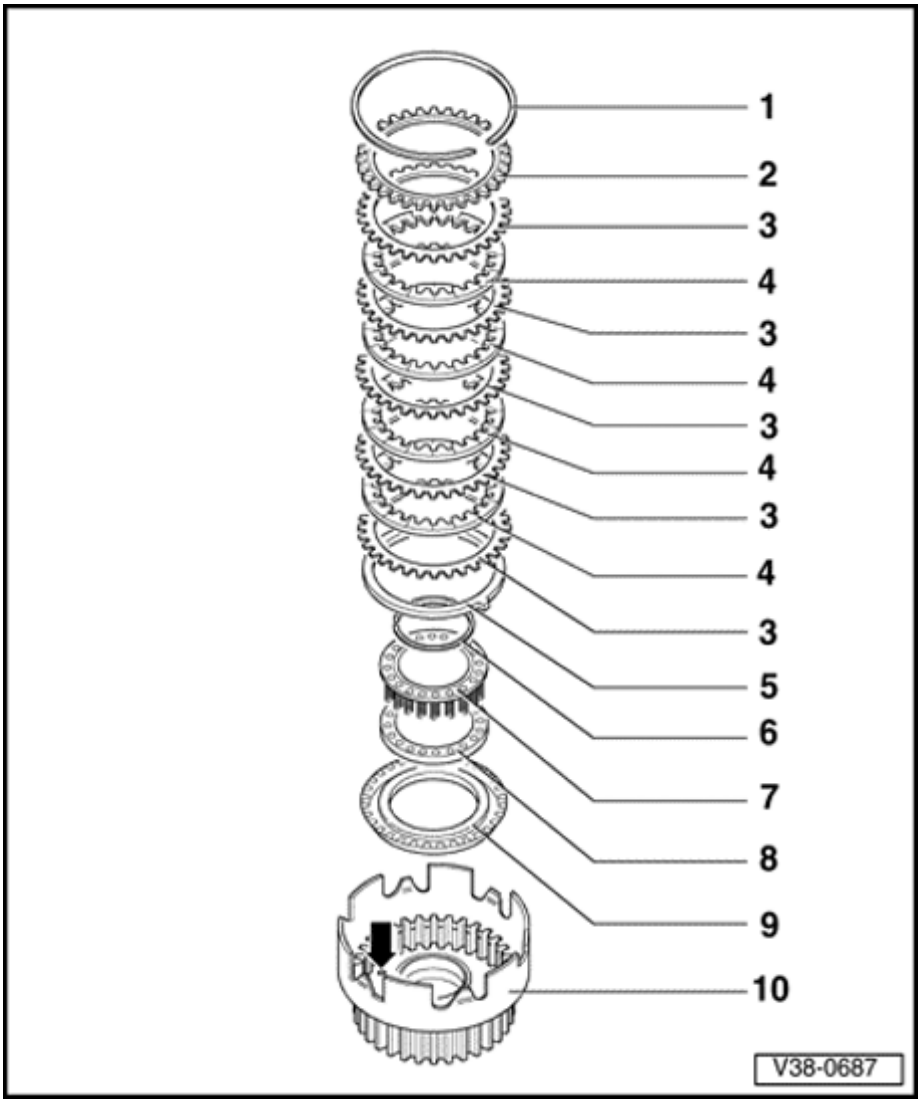

4 - Inner plate

- Quantity ⇒ page 00-3

5 - Corrugated washer

6 - Circlip

- Removing and installing ⇒ Fig. 1
- Installation position ⇒ Fig. 2

7 - Spring supporting plate

- With springs
- Installation position ⇒ Fig. 2

38-15

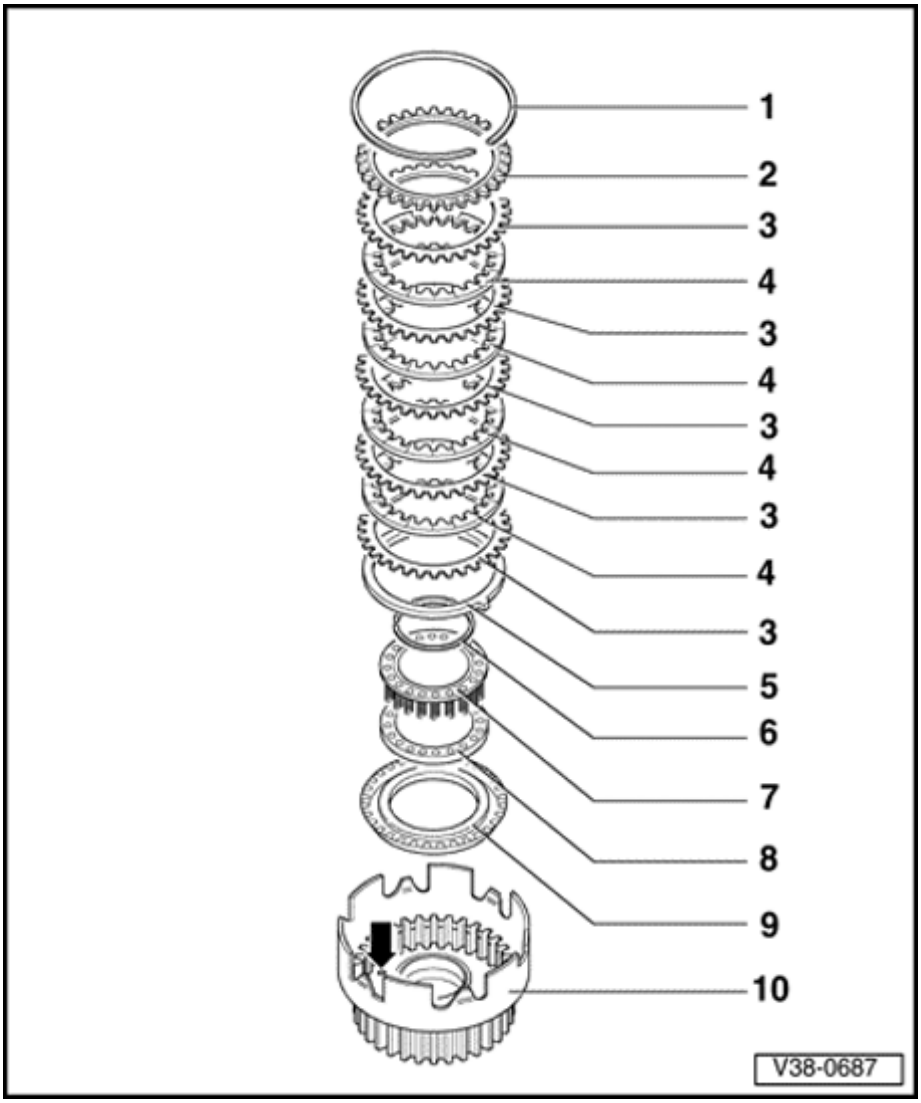

8 - Spring supporting ring

9 - Piston

- Sealing lips are vulcanised to piston
- Moisten sealing lips with ATF before installing
- Turn piston slightly while installing

10 - Clutch housing with clutch tube

38-16

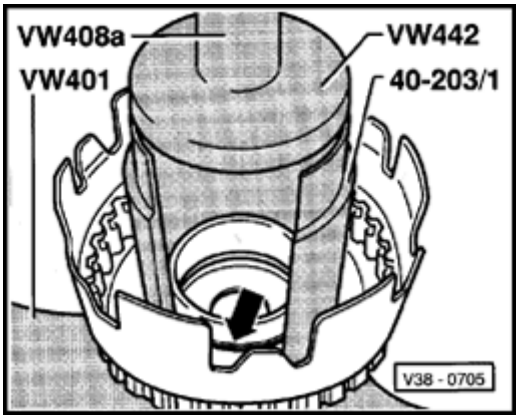

Fig. 1 Removing and installing circlip

Removing

- Carefully press down spring supporting plate (do not bend) and spread circlip (arrow).

Installing

- Install new circlip and carefully press down with spring supporting plate. Plate must be centered relative to hub, otherwise spring supporting plate will be bent.

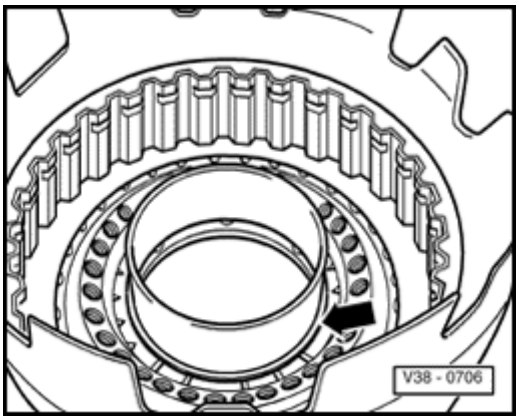

Fig. 2 Installation position of spring supporting plate, checking circlip

- Circlip (arrow) must be seated in the groove of clutch housing.
- Spring supporting plate must be centered relative to hub.

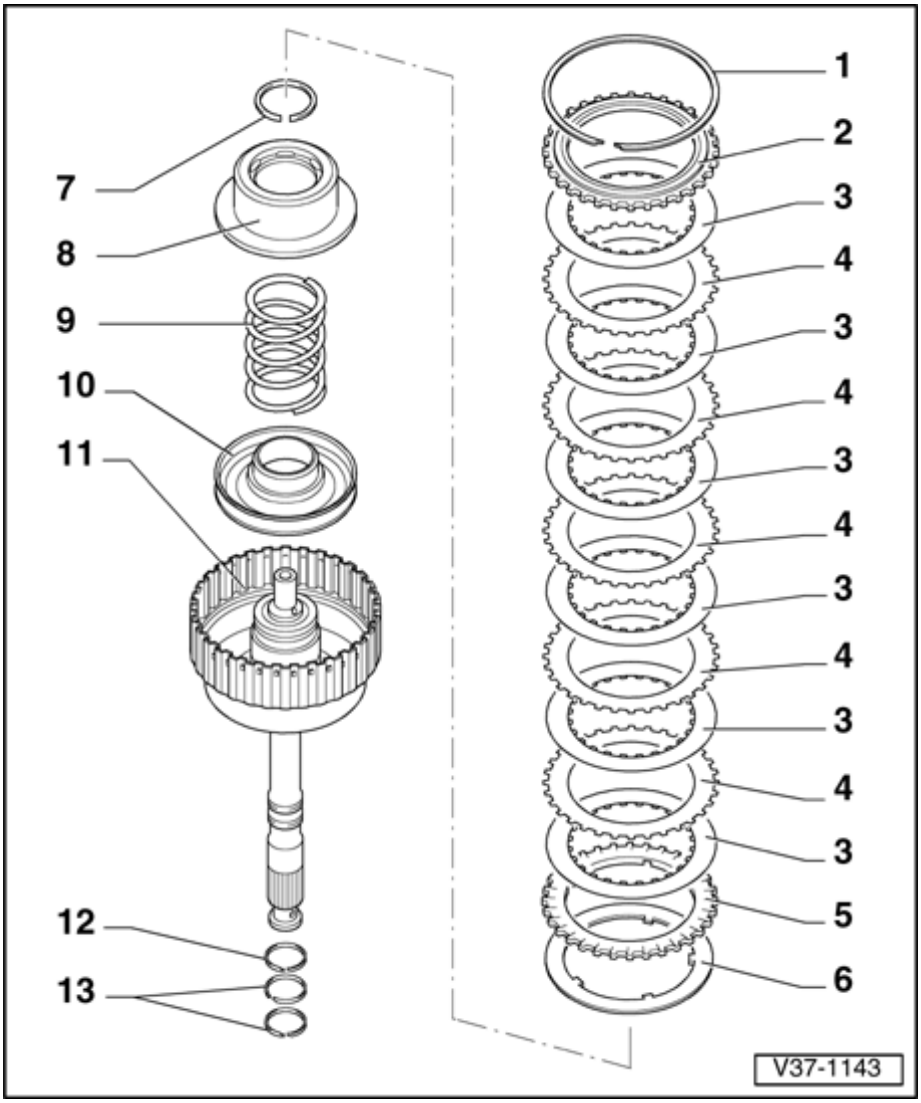

4th gear clutch -K3- with pump shaft, disassembling and assembling

1 - Circlip

- Different thicknesses for different clutch assemblies
- Mark after removing and install in same position

2 - Thrust plate

- Install with stepped side facing circlip

3 - Inner plate

- Quantity ⇒ page 00-3

4 - Outer plate

- Quantity ⇒ page 00-3

38-18

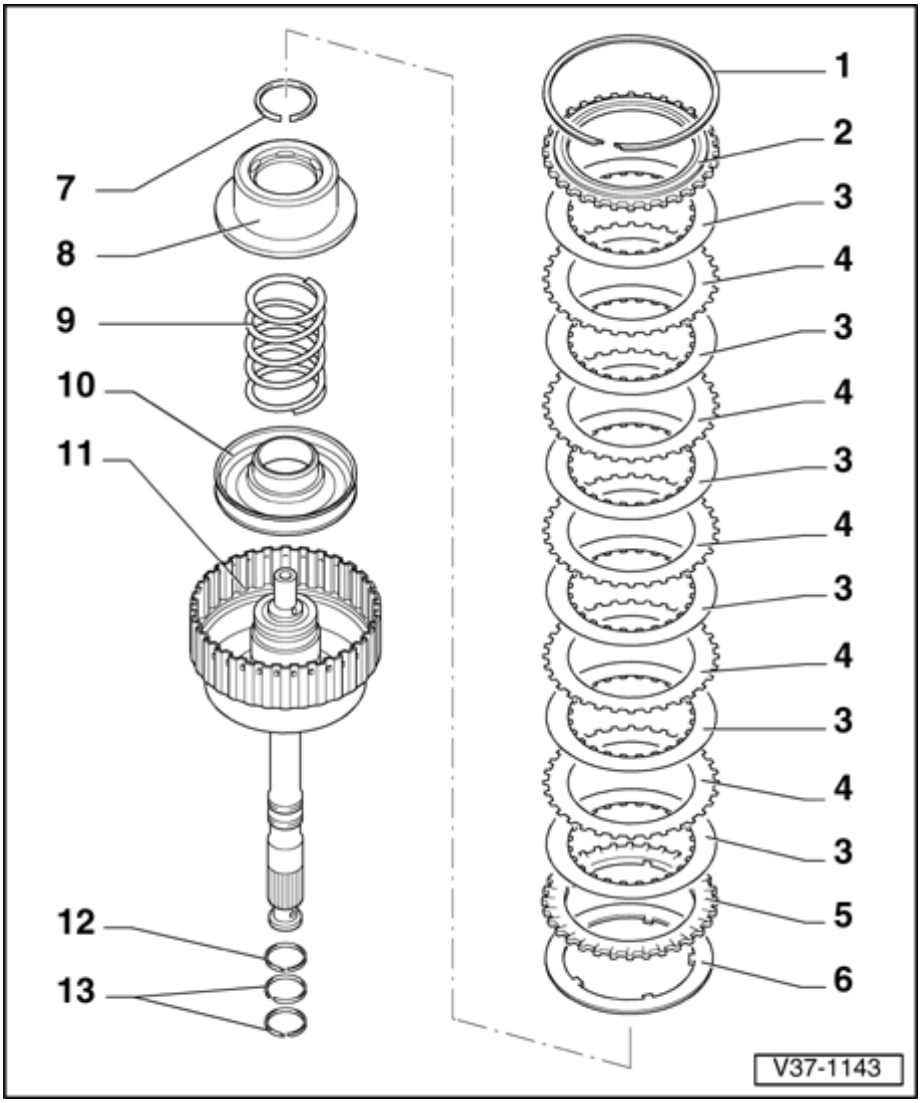

5 - Pressure plate

- Install with peened corrugated washer facing piston

6 - Corrugated washer

- Peened to thrust washer

7 - Circlip

- Removing and installing ⇒ Fig. 1

8 - Piston cap

- Sealing lips are vulcanized to piston cap
- Moisten with ATF before installing
- Turn piston cap slightly when installing
- When removing and installing press down and fit circlip (item - 7 -)

9 - Spring

- Seat between piston and piston cap

38-19

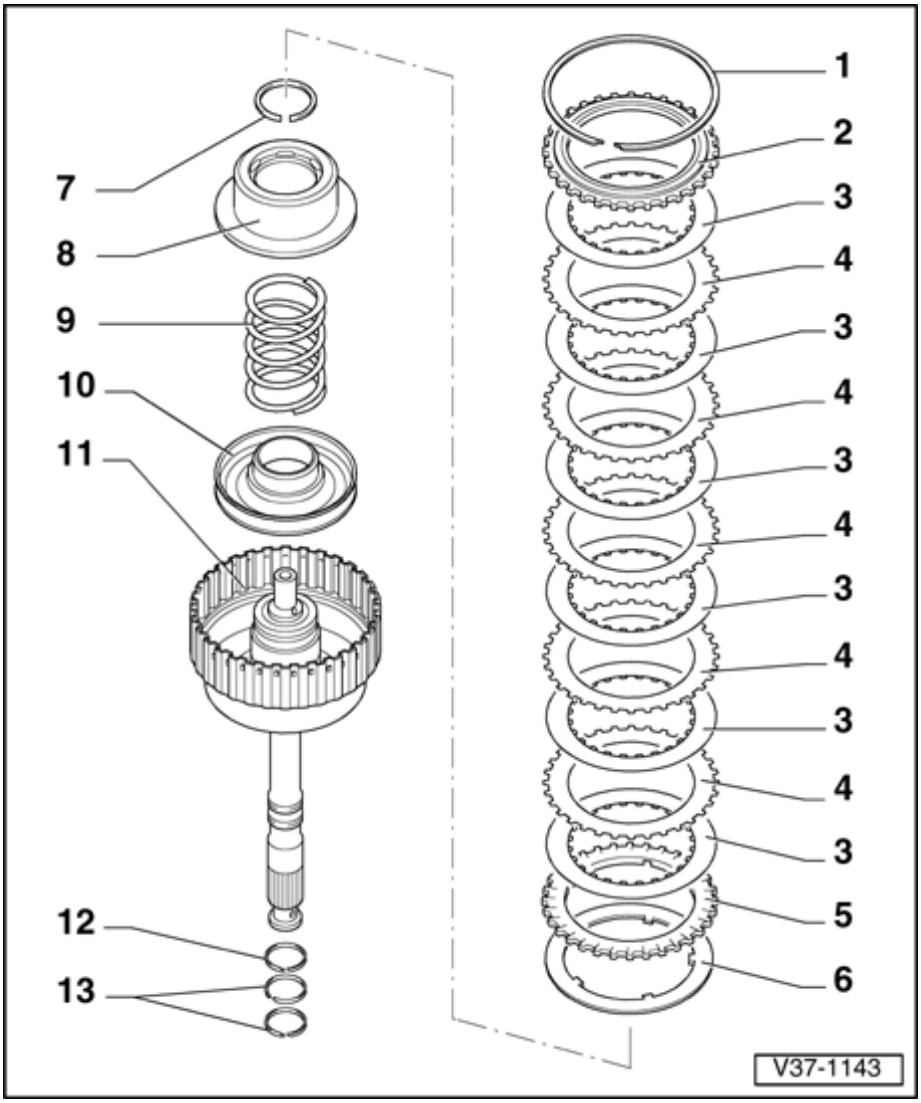

10 - Piston

- Sealing lips are vulcanized to piston
- Moisten with ATF before installing
- Turn piston slightly while installing

11 - Clutch housing with pump shaft

- Height varies according to number of inner and outer plates

12 - Piston ring

- Replace only faulty piston rings
- Piston ring is destroyed when removed
- Check that ring is correctly located ⇒ Fig. 2
- Installing ⇒ Fig. 3

13 - Piston ring

- Check that ring is correctly located ⇒ Fig. 2
- Installing ⇒ Fig. 3

38-20

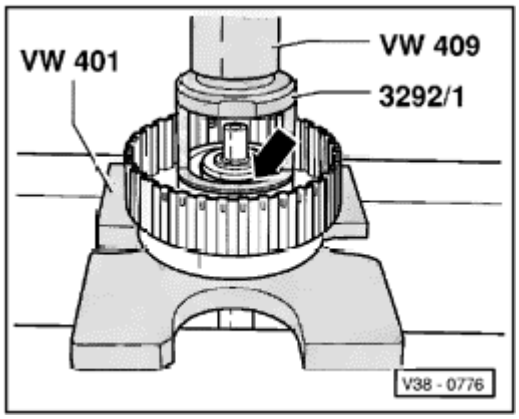

Fig. 1 Removing and installing circlip

- Press down carefully on piston cap until circlip (arrow) can be installed.

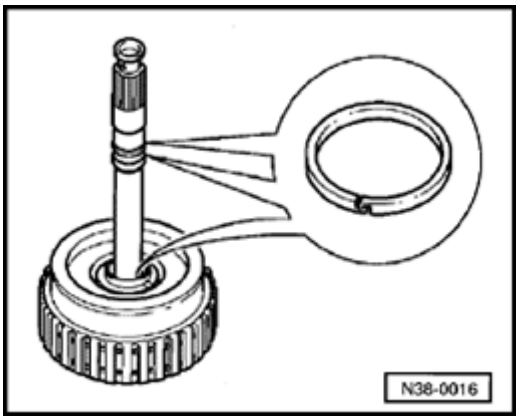

Fig. 2 Checking that piston rings are correctly located

There is a piston ring installed on the turbine shaft inside the clutch housing (arrow).

- Make sure that ends of piston rings are hooked together.

38-21

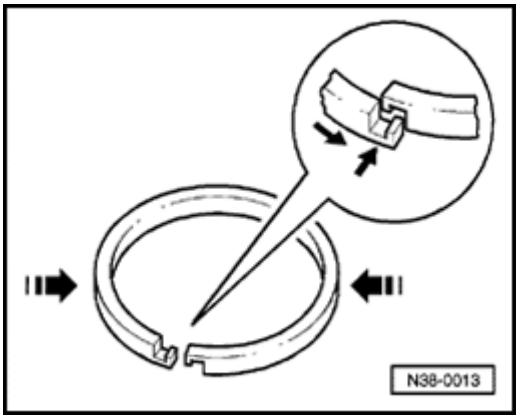

Fig. 3 Installing piston rings and hooking ends together

- Place piston ring in groove.
- To hook ends together press sides of ring in and guide ends over one another.
- Do not twist piston ring out of groove on one side.

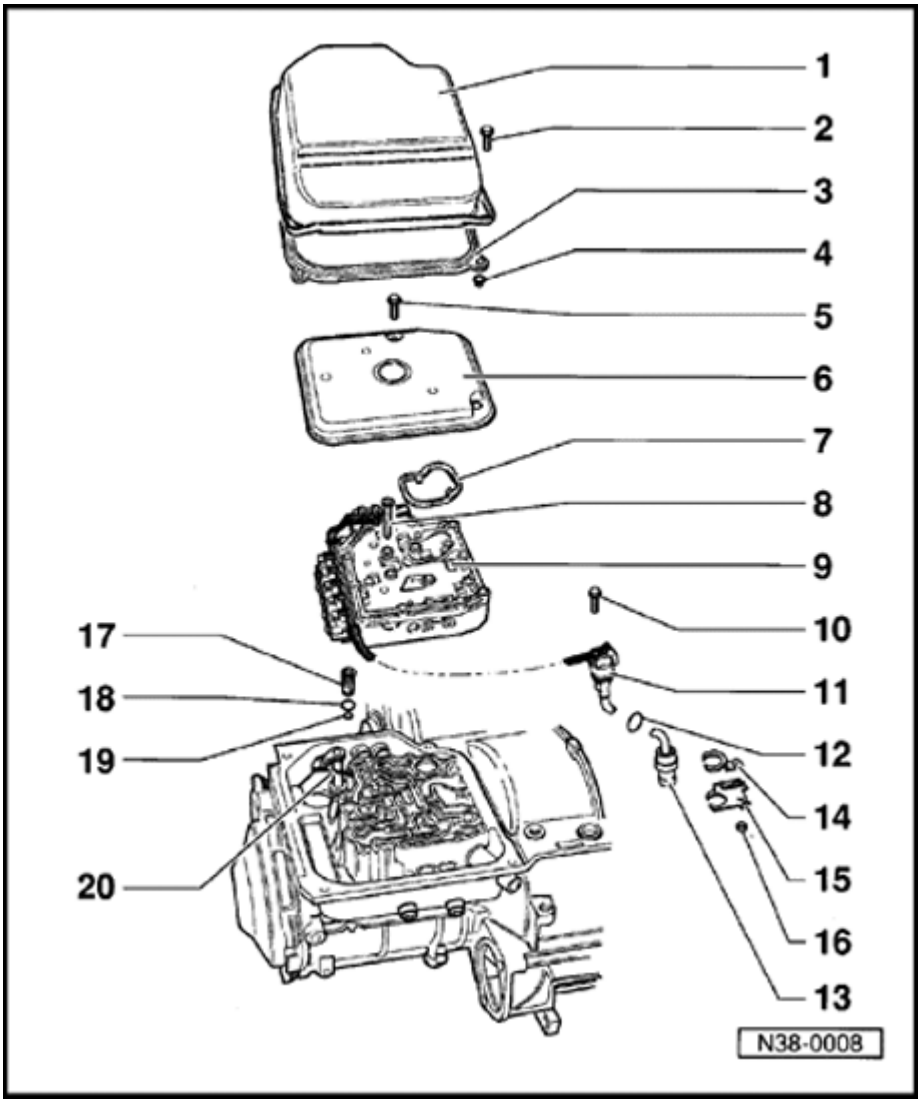

Valve body, removing and installing

CAUTION!

Do not run the engine or tow the vehicle with oil pan removed or when there is no ATF in the transmission.

Note:

- *The valve body can also be removed when the transmission is installed.*

  - - On vehicles with 6-cylinder engine, remove starter.

- *After re-installing the oil pan, fill with ATF ⇒ page 37-43 .*

- *Always replace a valve body that is fouled or malfunctioning.*

1 - Oil pan

2 - Bolt

- Tightening torque: 12 Nm (9 ft lb)

38-23

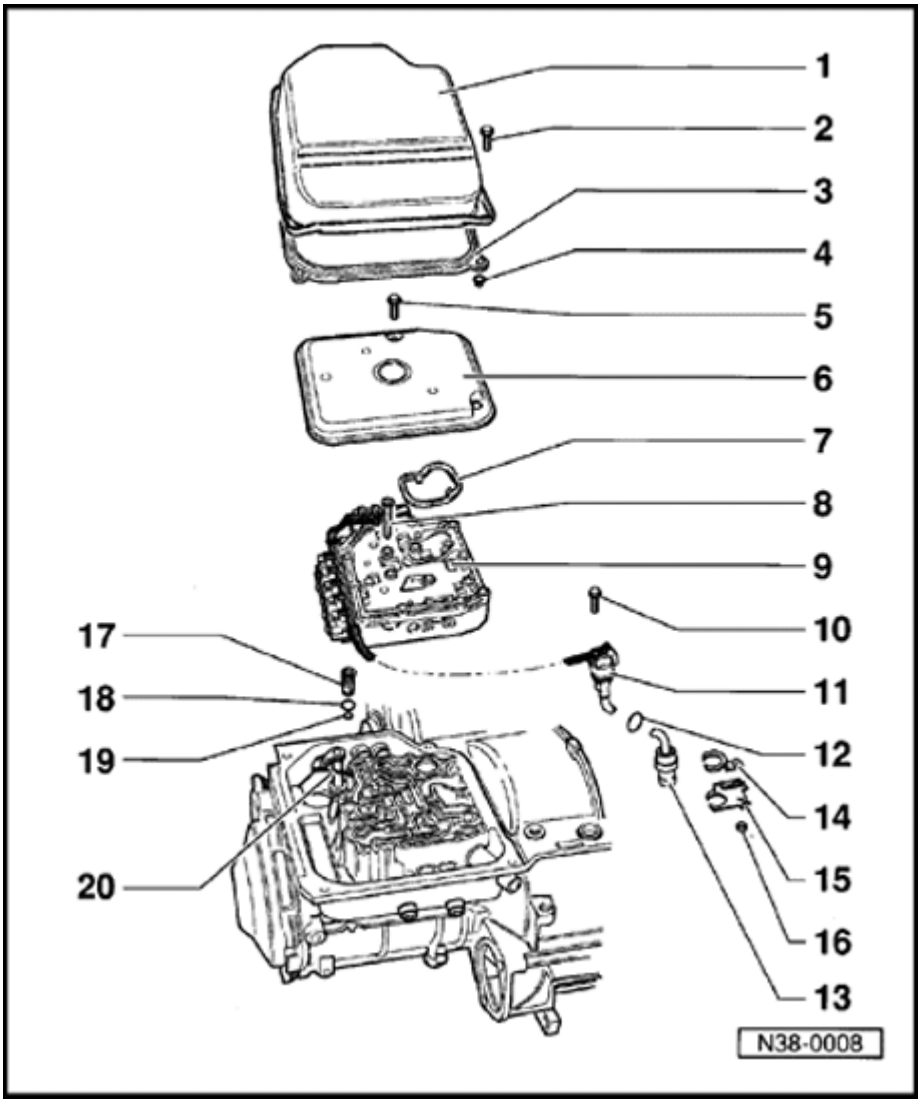

3 - Gasket

- Always replace
- Press spacer bushings into gasket

4 - Spacer bushing

- Press into gasket

5 - Bolt

- Tightening torque: 8 Nm (71 in lb)

6 - ATF screen

- Press into gasket
- Installing ⇒ Fig. 4

7 - Gasket

- Always replace
- Press into ATF screen

8 - Bolt

- Tightening torque: 5 Nm (44 in lb)

9 - Valve body

- Marking ⇒ Fig. 5
- Installing ⇒ Fig. 2
- Removing and installing conductor strip only ⇒ page 38-29

38-24

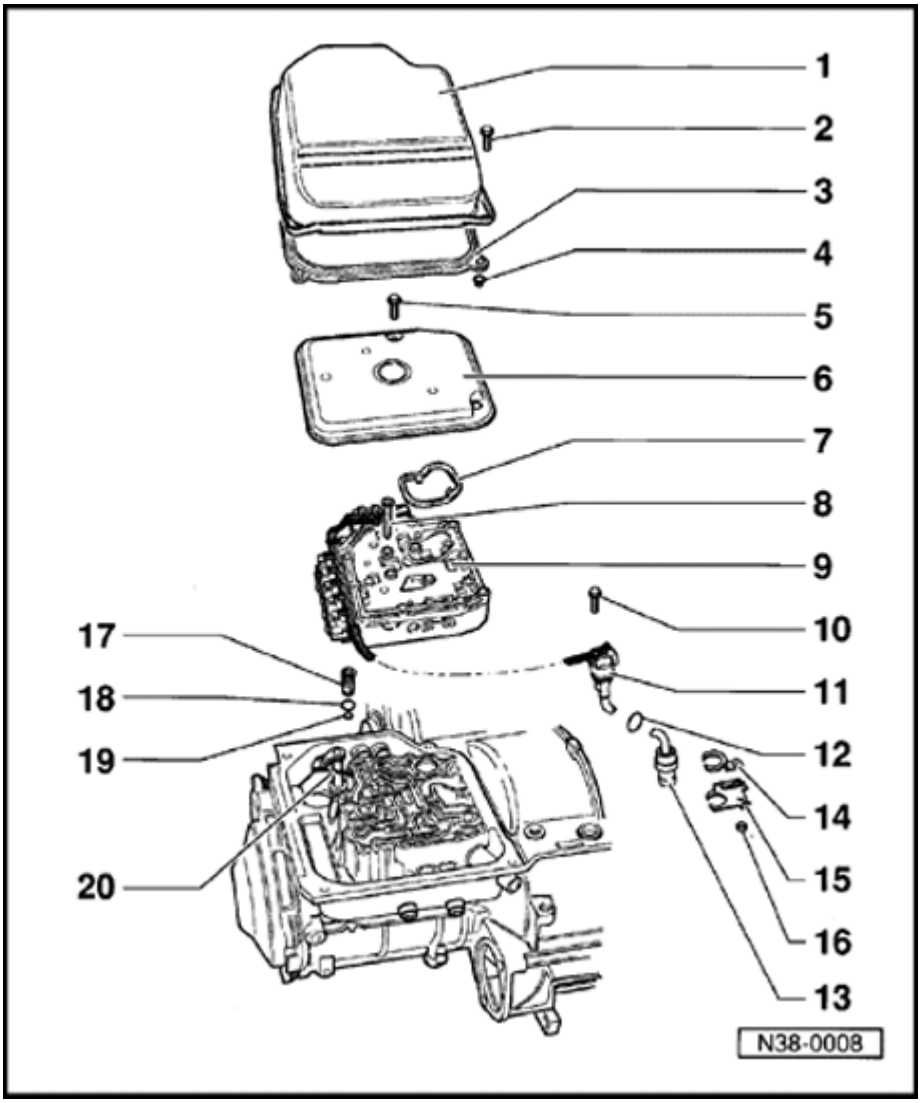

10 - Bolt

- Tightening torque: 10 Nm (7 ft lb)

11 - Cable gland

- Insert with O-ring

12 - O-ring

- Always replace

13 - Cable connector

- Attach to starter

14 - Clip

15 - Clip

16 - Nut

- Tightening torque: 10 Nm (7 ft lb)

17 - Sealing plug

- Take out before removing and installing free wheel
- Insert so that lug is located in groove on housing ⇒ Fig. 1
- Place O-rings onto sealing plug

38-25

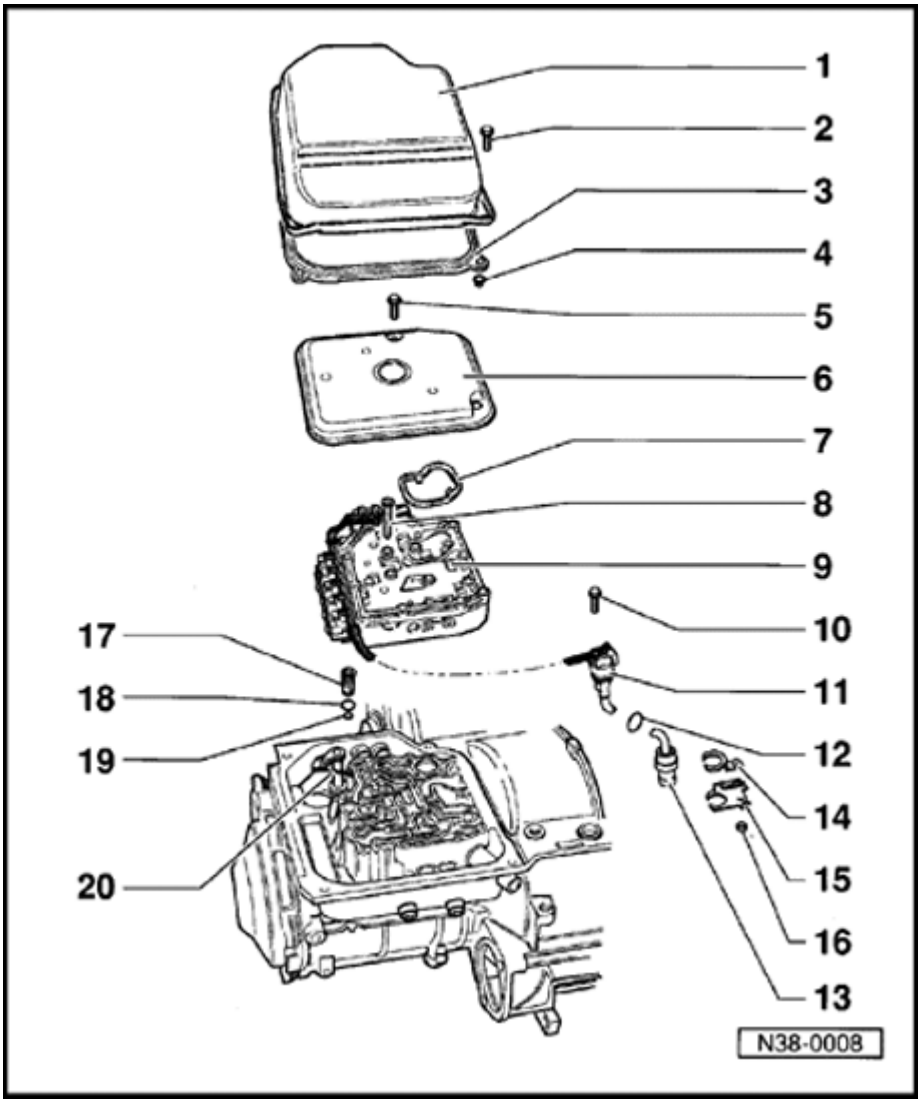

18 - O-ring

- Always replace

19 - O-ring

- Always replace

20 - Operating rod for manual selector valve

- Adjusting ⇒ Fig. 3
- Install with stepped side facing manual selector valve

38-26

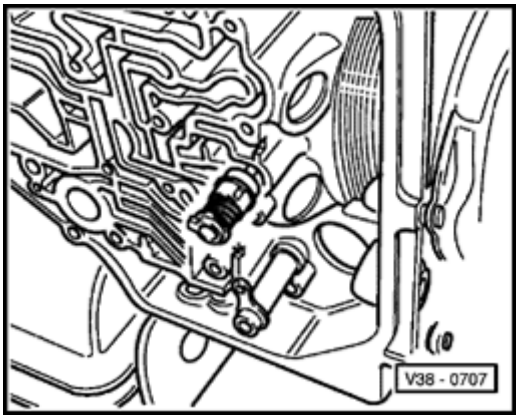

Fig. 1 Installing sealing plug

Remove the sealing plug from the housing before removing and installing the free wheel, otherwise the sealing plug and the O-ring will be damaged.

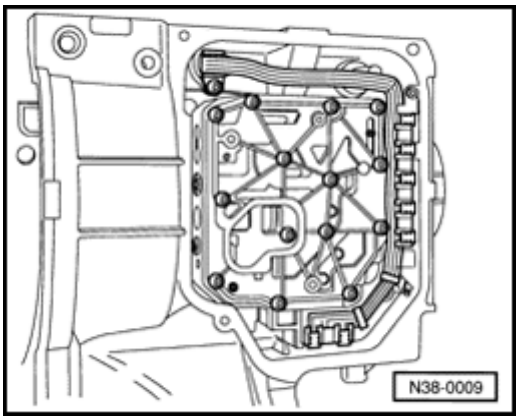

Fig. 2 Installing valve body

- Route conductor strip as illustrated.

  When installing do not kink or twist.

Conductor strip, removing and installing ⇒ page 38-29 .

38-27

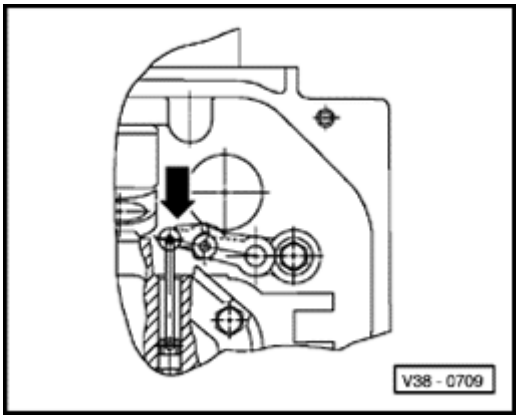

Fig. 3 Adjusting operating rod for manual selector valve

- Move selector shaft to position "P."
- Push operating rod with manual selector valve into valve body as far as stop (in direction of arrow) and tighten bolt.
  - Tightening torque: 4 Nm (35 in lb)

Note:

- *The manual selector valve must always be resting against the stop. Counter-hold in direction of arrow when tightening bolt.*
- *Always replace manual selector valve bolt.*

38-28

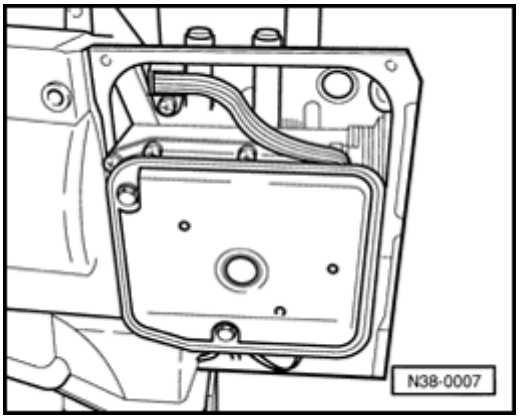

Fig. 4 Installing ATF screen

- Press gasket into ATF screen before installing screen.

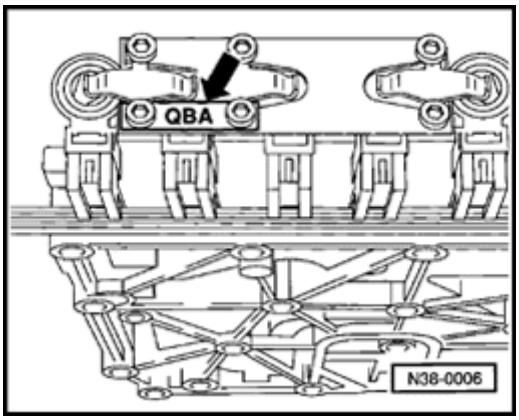

Fig. 5 Identification of valve body

Code letters are stamped on a metal tab. The metal tab must remain on the valve body.

Vehicle/transmission applications ⇒ page 00-3

38-29

Valve body conductor strip with transmission fluid temperature sensor, removing and installing

If necessary, the conductor strip can be replaced with the transmission installed, without removing the valve body.

Removing

- Drain Automatic Transmission Fluid (ATF).
- Raise vehicle and remove protective plate beneath ATF pan.
- Disconnect conductor strip harness connector.

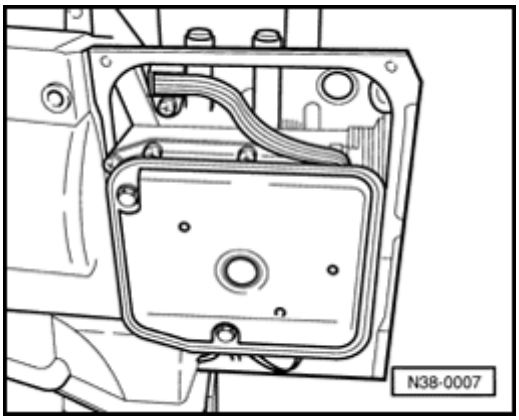

- Remove ATF pan and ATF screen.

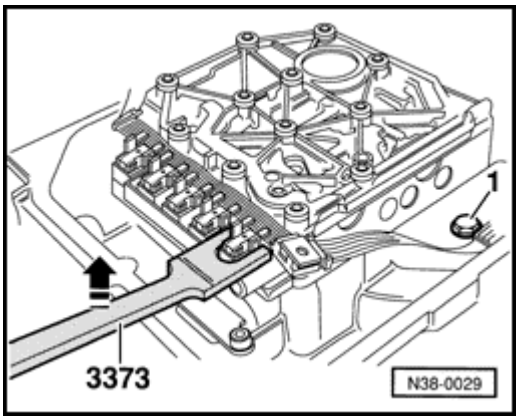

- Place special tool 3373 into position on stop under solenoid valve connector, and pry conductor strip off in direction shown (arrow).
- Remove bolt -1- and remove conductor strip.

Note:

If the locating points are damaged, the valve body must be replaced.

38-30

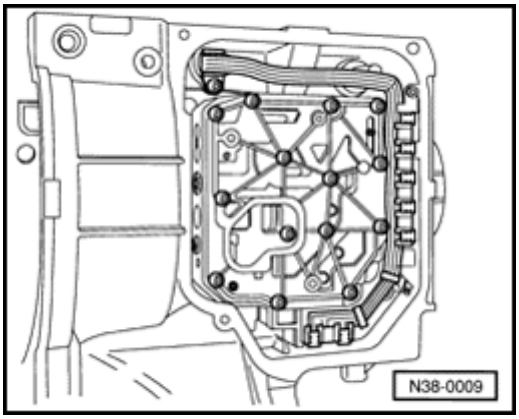

Installing

- Route conductor strip as shown; do not kink or twist.
- Press gasket into ATF screen before installing screen.
- Replace ATF pan gasket.

  Clip bushing into gasket.

Tightening torques

Conductor strip to trans. housing	10 Nm	(7 ft lb)
ATF screen to valve body	8 Nm	(71 in. lb)
ATF pan to trans. housing	12 Nm	(9 ft lb)

- Add 3 liters (3.2 US qt.) ATF, check ATF level, and top up as necessary ⇒ page 37-43 .

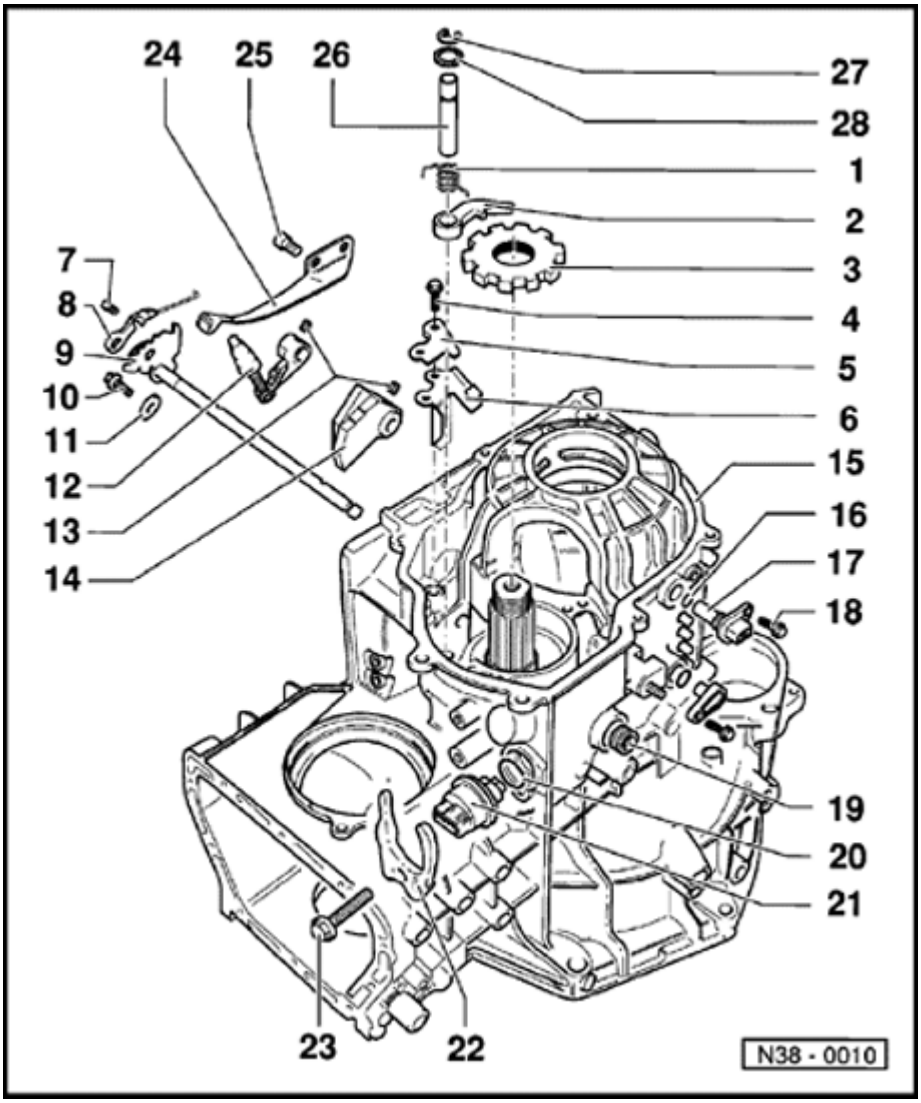

Parking lock, disassembling and assembling

Note:

- *The Multi-Function Transmission Range (TR) Switch -F125- and the Vehicle Speed Sensor (VSS) -G68- can be tested in the vehicle by the On Board Diagnostic program ⇒ page 01-1 , On Board Diagnostic.*
- *The output gear must be removed to disassemble and assemble the parking lock ⇒ page39-14 , Drive pinion, removing and installing.*

1 - Return spring

- Installing ⇒ Fig. 4

2 - Detent lever

- Installing with return spring ⇒ Fig. 4

3 - Parking lock gear

- Rounded side faces teeth of drive pinion

4 - Bolt

- Tightening torque: 14 Nm (10 ft lb)

38-32

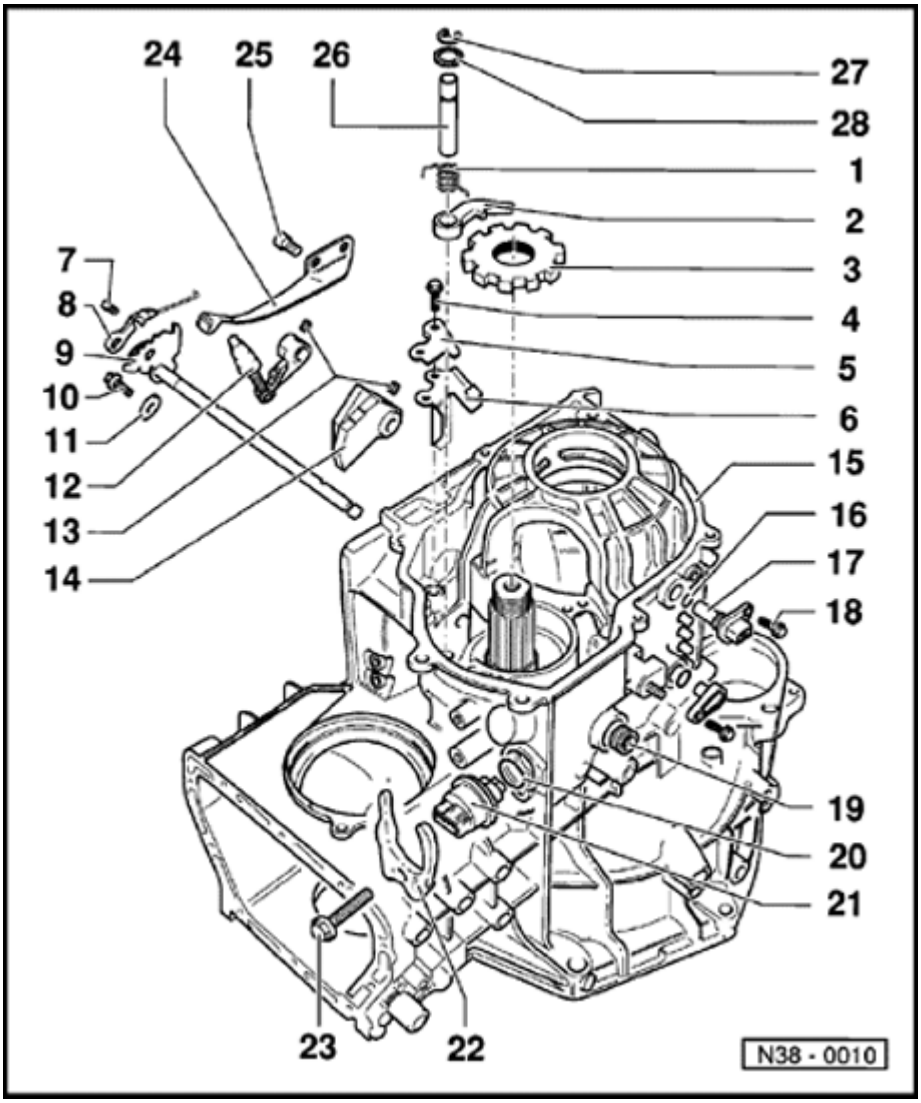

5 - Supporting plate

- Installing ⇒ Fig. 3

6 - Guide plate

- Install before supporting plate ⇒ Fig. 3

7 - Bolt

- Tightening torque: 4 Nm (35 in lb)

8 - Manual selector valve control

- Adjusting ⇒ page 38-22 , Valve body, removing and installing

9 - Selector shaft with selector segment

10 - Bolt

- Tightening torque: 10 Nm (7 ft lb)

11 - Locking washer

12 - Engaging lever

- Insert with selector shaft and detent segment

13 - Spring pin

- Drive in after installing engaging lever and detent segment ⇒ Fig. 1
- Drive out with drift

38-33

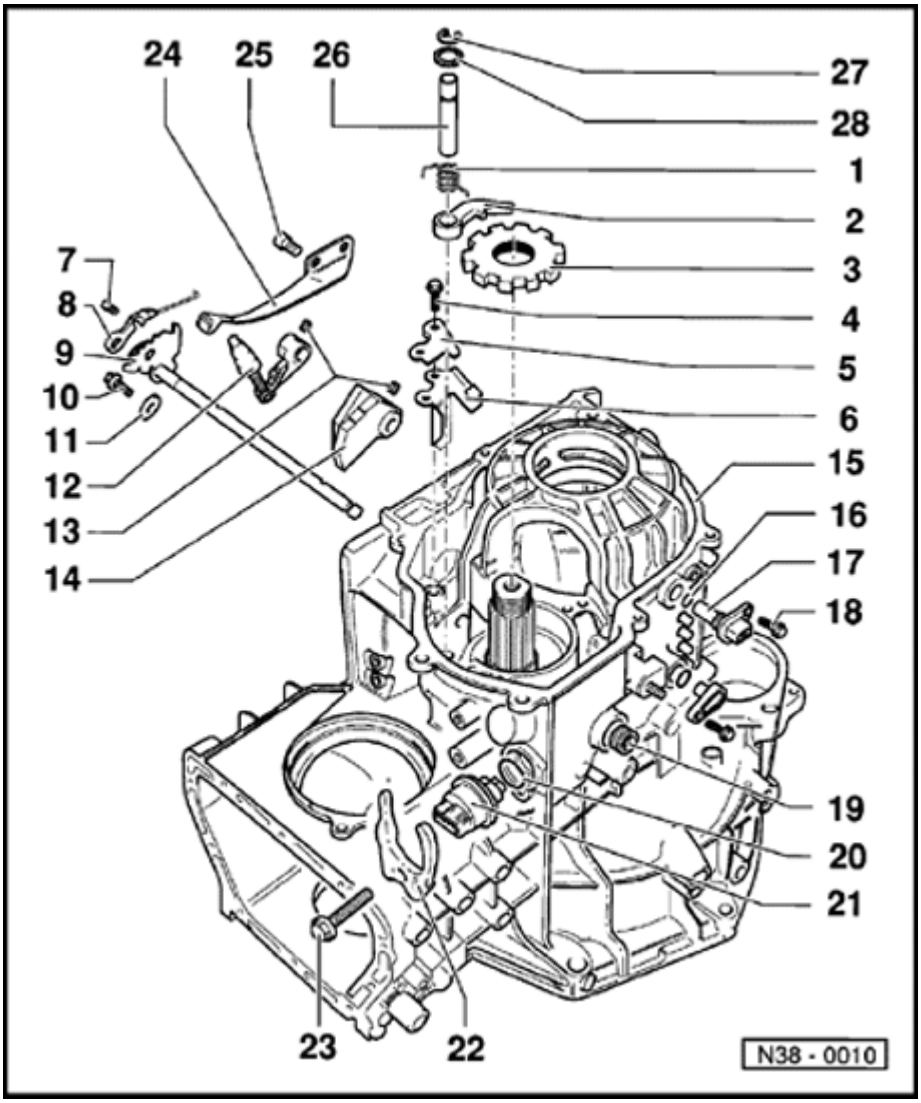

14 - Detent segment

- Insert with selector shaft and engaging lever

15 - Transmission housing

16 - O-ring

- Always replace

17 - Vehicle Speed Sensor (VSS) -G68-

- Can be tested in vehicle by On Board Diagnostic program ⇒ page 01-20

18 - Bolt

- Tightening torque: 10 Nm (7 ft lb)

19 - Seal

- Pry out with screwdriver
- Drive in flush with VW 423

20 - O-ring

- Always replace

21 - Multi-Function Transmission Range (TR) Switch -F125-

- Install so that 1 pin each is resting on a slope of the detent segment
- Can be tested in vehicle by On Board Diagnostic program ⇒ page 01-20

38-34

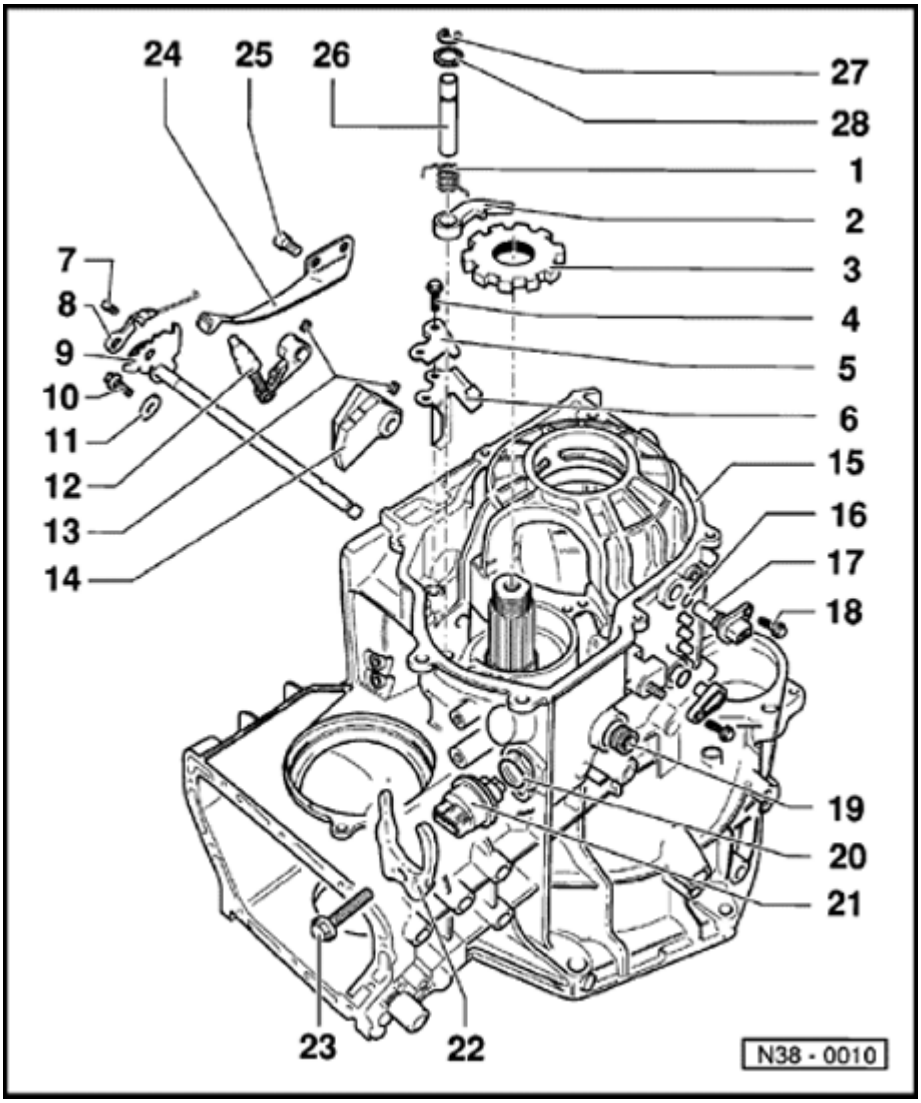

22 - Bracket

- For Multi-Function Transmission Range (TR) Switch

23 - Bolt

- Tightening torque: 10 Nm (7 ft lb)

24 - Spring for selector segment

25 - Bolt

- Tightening torque: 10 Nm (7 ft lb)

26 - Shaft for detent lever

- Secured by circlip and bearing cap of drive pinion
- According to version with groove for circlip

27 - Circlip

- Always replace
- Only install on shafts with groove for circlip

28 - Washer

38-35

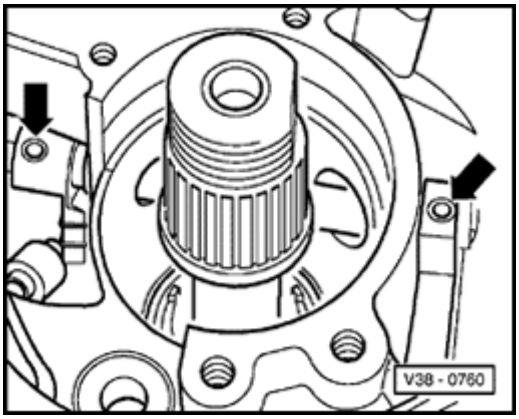

Fig. 1 Removing and installing spring pin

Driving out

- Drive out spring pins (arrows) for engaging lever and detent segment just far enough to remove selector shaft.

Note:

Spring pin for engaging lever may drop into planetary gearbox.

Driving in

- Drive in spring pins after inserting selector shaft, engaging lever and detent segment.

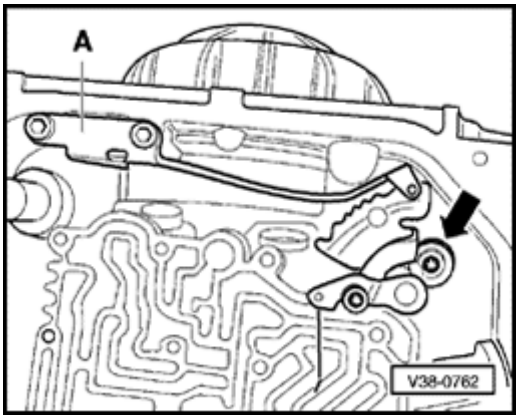

Fig. 2 Removing and installing selector shaft with selector segments

- Remove bolt (arrow) and washer.

Note:

- *The washer is placed into the groove of the selector shaft and secures the shaft to keep it from dropping out.*
- *The selector shaft can be removed or installed after taking out the spring for the selector segment.*

38-36

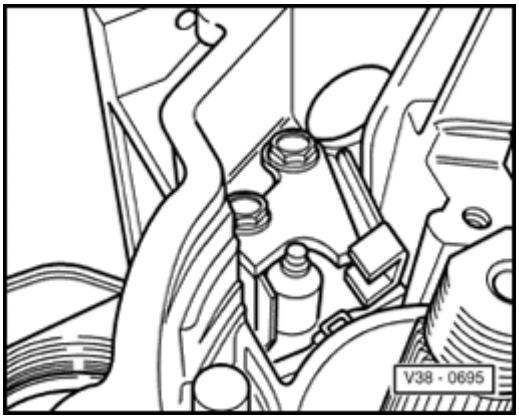

Fig. 3 Installing guide plate and supporting plate

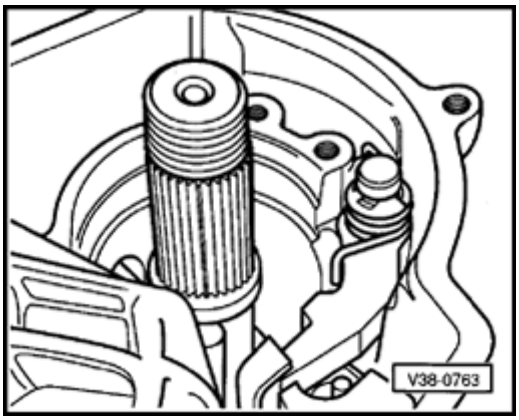

Fig. 4 Installing pawl with return spring

Oil in final drive, checking

Oil level is checked with transmission installed.

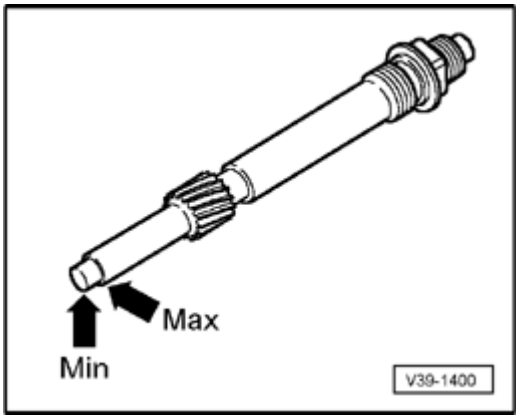

The difference between the "Min" and "Max" marks is approx. 0.1 liter (3.4 fl. oz.). Excess oil can be drawn off using the VAG 1358A extraction system or EZ1 fluid evacuator.

Checking:

- Remove speedometer drive shaft and clean using a cloth.
- Install and remove speedometer drive shaft and if necessary correct oil level.
  - Final drive oil level must be between Min. and Max.

Drive flange oil seal, removing and installing

(Transmission installed)

- Disconnect drive shaft from drive flange.

When replacing right-hand oil seal:

- Remove balance weight.

- Lay drive shaft to one side and secure.

When replacing left-hand oil seal:

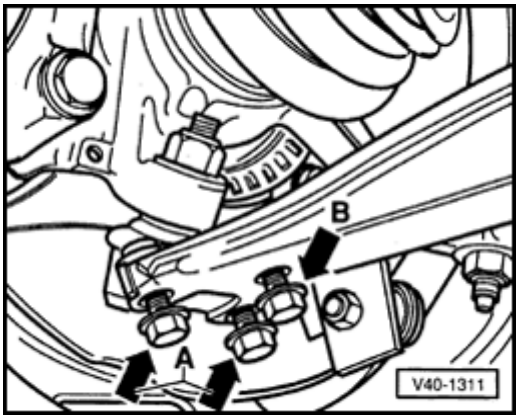

- Mark installation position of ball joint/control arm mounting bolts and:
  - Remove outer bolts (arrow -A-).
  - Loosen inner bolt (arrow -B-).
- Turn steering to right, full lock.
- Swing ball joint out and place left-hand drive shaft to one side.

39-3

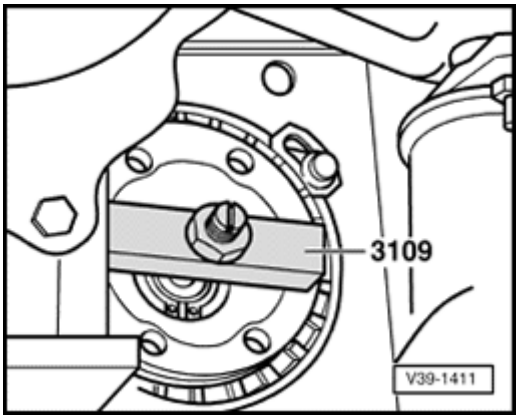

- Mount installation tool 3109 and remove circlip.

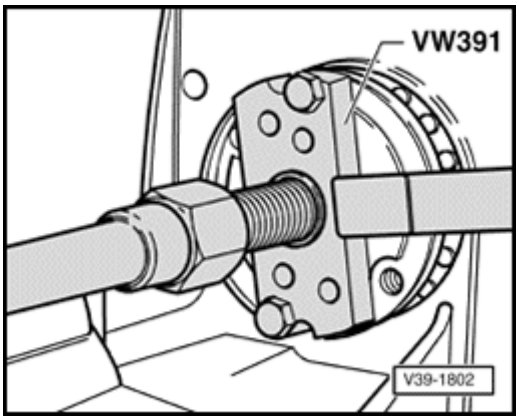

- Pull off drive flange with VW 391.
- Pull out drive flange oil seal with VW 681.

39-4

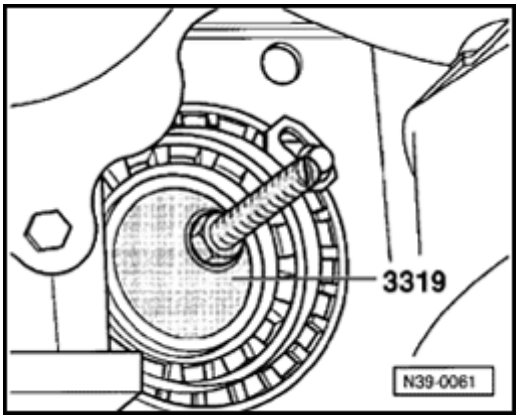

- Pull new oil seal in up to stop with press tool 3319, M10 threaded rod (approx. 80 mm or 3-1/4 in. long) and nut with washer.
- Fill space between seal and dust lip with multi-purpose grease.
- Install drive flange, dished washer and circlip.

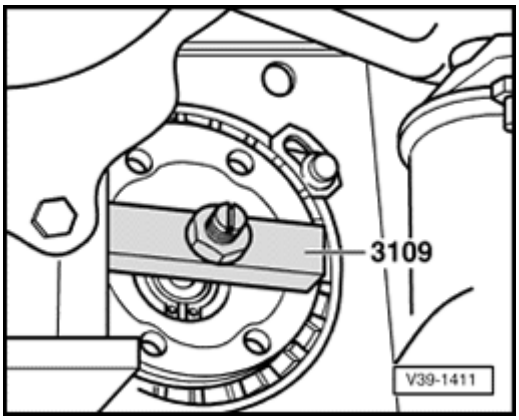

- Pull drive flange in.

Note:

Drive flange can also be pulled in with VW 391.

- Install circlip and seal drive flange with cover.
- Install drive shaft.
- Reconnect ball joint to control arm.
- With transmission installed, check final drive oil level ⇒ page 39-1 .

Tightening torque:

Drive shaft to drive flange	45 Nm (33 ft lb)
Ball joint to control arm	35 Nm (26 ft lb)

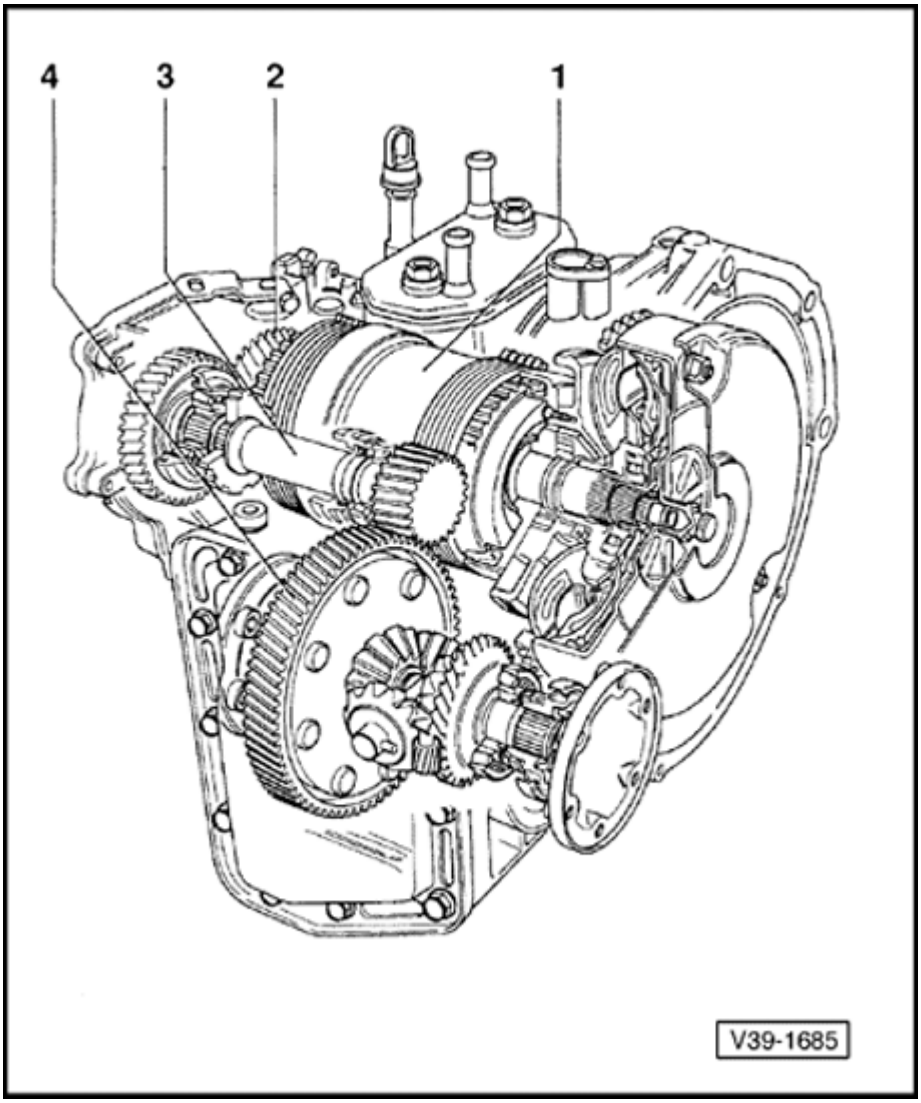

Final drive, disassembling and assembling

Repair overview

1 - Planetary gear

- Disassembling and assembling ⇒ page 37-49

2 - Input gear

- Removing and installing ⇒ page 39-8
- Adjusting ⇒ page 39-48
- Adjusting final drive (overview) ⇒ page 39-41

Note:

Repairs on the input gear can be carried out only after the component parts of the planetary gear have been removed.

39-7

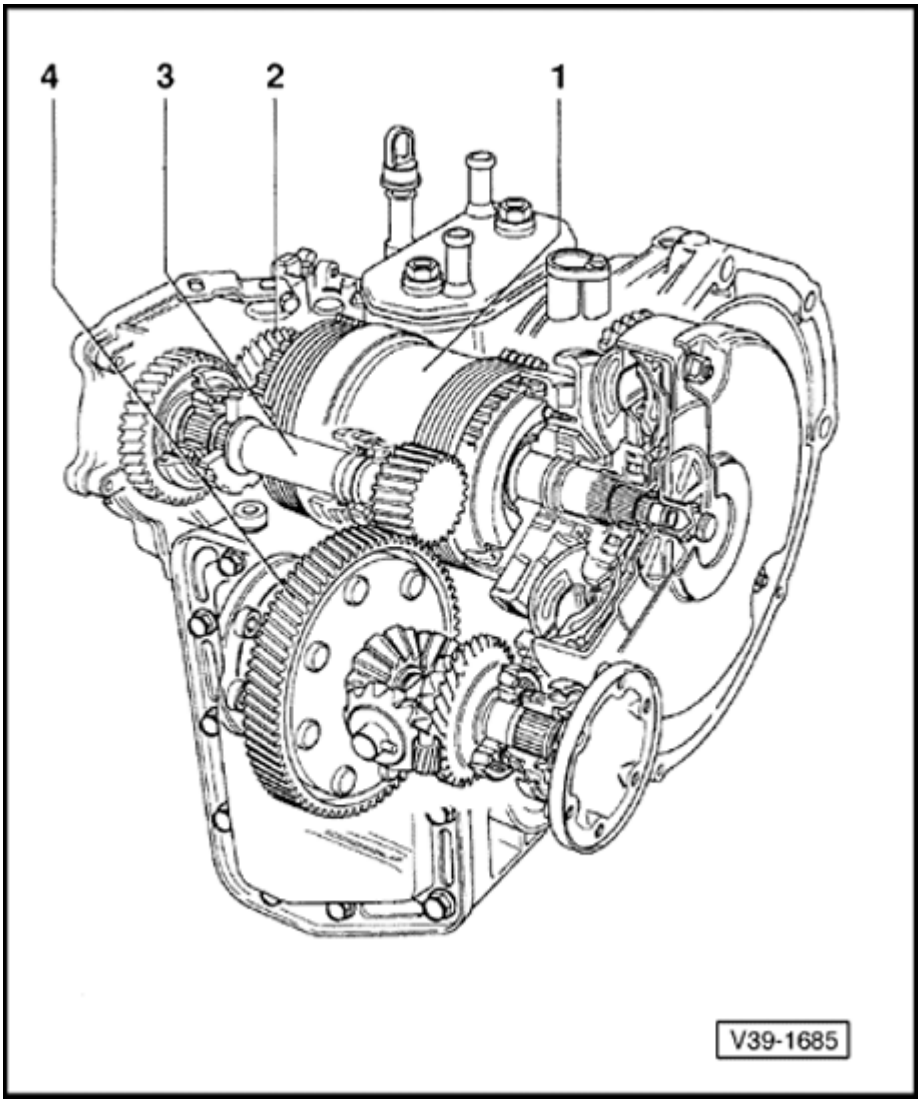

3 - Drive pinion

- Removing and installing ⇒ page 39-14
- Adjusting ⇒ page 39-44
- Adjusting final drive (overview) ⇒ page 39-41

4 - Differential

- Removing and installing ⇒ page 39-23
- Disassembling and assembling ⇒ page 39-33
- Adjusting ⇒ page 39-51
- Adjusting final drive (overview) ⇒ page 39-41

39-8

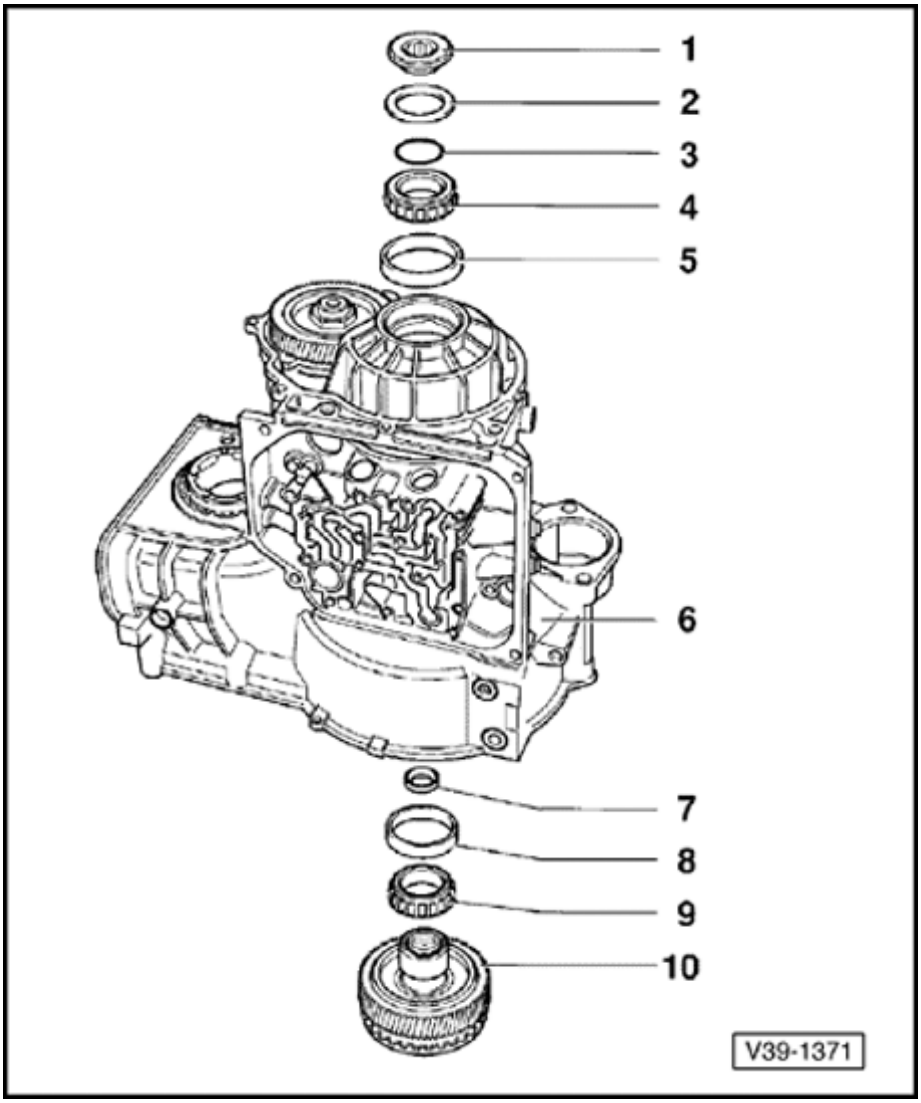

Input gear, removing and installing

Note:

Drive pinion and differential do not need to be removed.

1 - Socket-head fastener

- Tightening torque: 250 Nm (184 ft lb)
- Engage parking lock to remove and install
- Use 22 mm hex wrench
- Before installing socket head fastener insert axial needle bearing - 7 -

2 - Dished washer

- Curved side faces socket head fastener

3 - Shim

- Determining thickness ⇒ page 39-48 , Input gear, adjusting

39-9

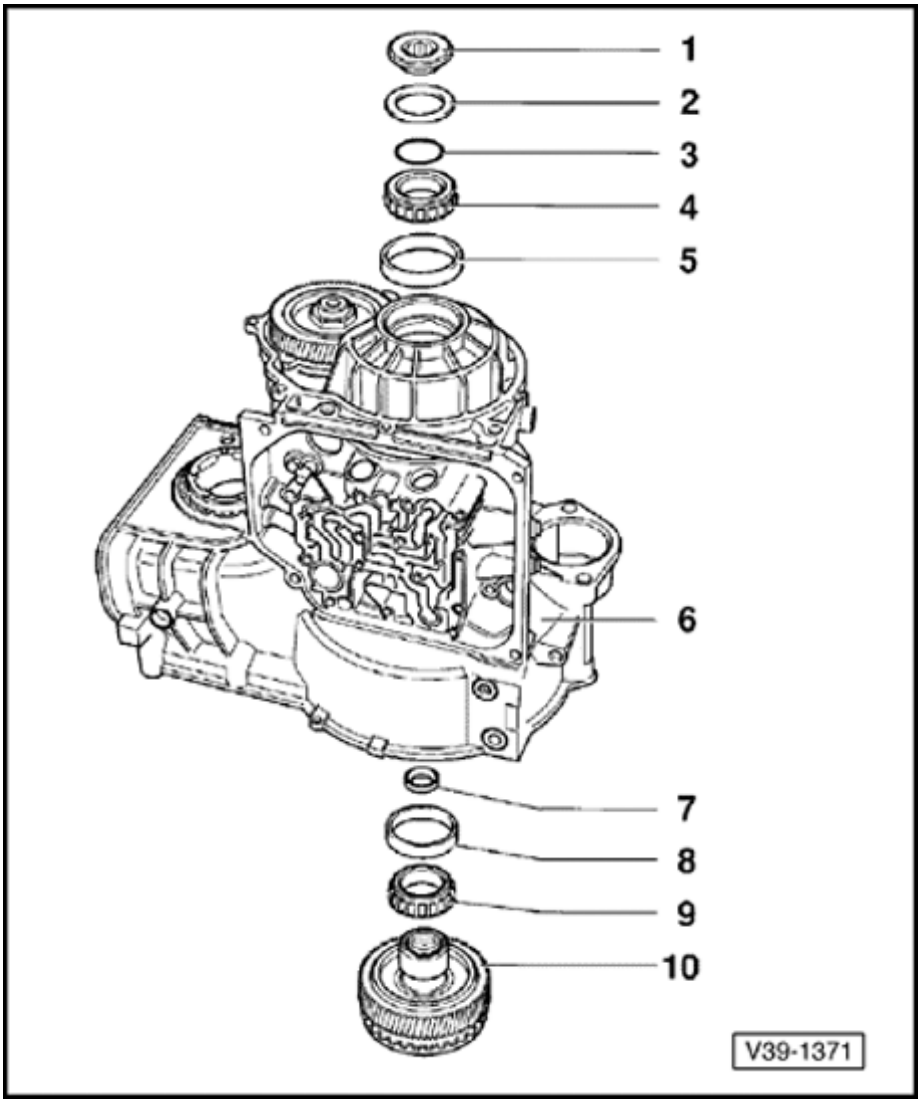

4 - Tapered roller bearing inner race

- Install so that lugs engage in groove of tapered roller bearing inner race - 9 - ⇒ Fig. 3
- Installation position ⇒ Fig. 4
- After measuring thickness of shim, fit onto input gear with AMV 185 101 A1 thread locking fluid

5 - Tapered roller bearing outer race

- Drive out with drift
- Drive in with tool 30-205
- Install with AMV 185 101 A1 locking fluid

6 - Transmission housing

7 - Axial needle bearing

- Install with flat side facing input gear
- Insert into input gear before installing socket-head fastener - 1 -

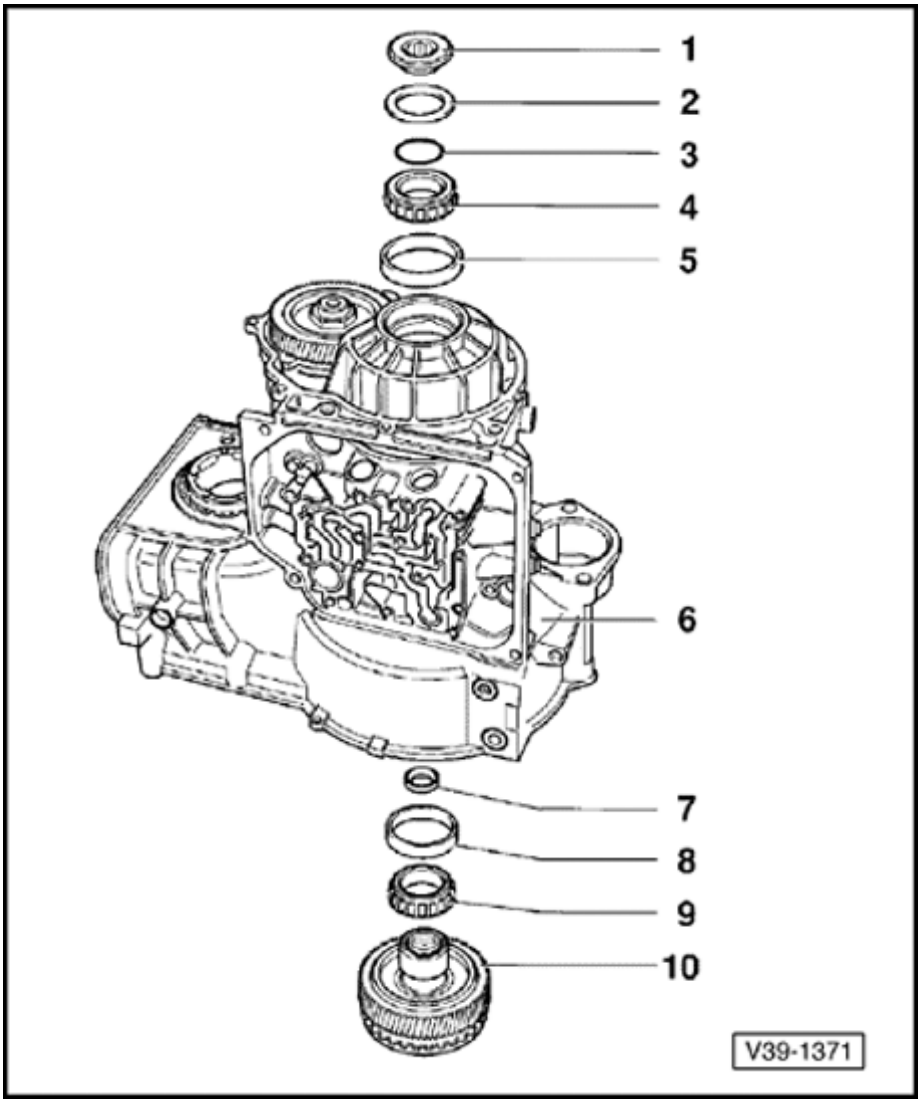

8 - Tapered roller bearing outer race

- Drive out with drift
- Drive in with 30-205 and appropriately long drift
- Install with thread locking fluid AMV 185 101 A1

9 - Tapered roller bearing inner race

- Pulling off ⇒ Fig. 1
- Pressing on ⇒ Fig. 2
- Installation position ⇒ Fig. 4
- Install with AMV 185 101 A1 locking fluid

10 - Input gear

- With impulse wheel for Vehicle Speed Sensor (VSS) -G68-
- Number of teeth ⇒ page 00-3 , Technical data
- Adjusting ⇒ page 39-48
- If signs of damage exist, always replace input gear and output gear together
- Removing ⇒ Fig. 5

Note:

If input gear is replaced, adjust planet carrier ⇒ page 37-8. .

39-11

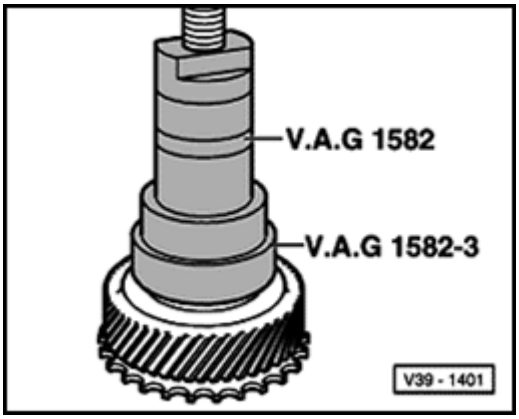

Fig. 1 Pulling off tapered roller bearing inner race

- Place press piece on input gear.

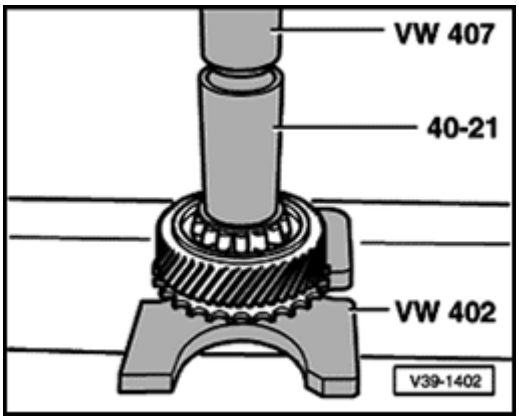

Fig. 2 Pressing on tapered roller bearing inner race

Note:

A press piece must be placed below the hub of the input gear to avoid damaging the input gear.

39-12

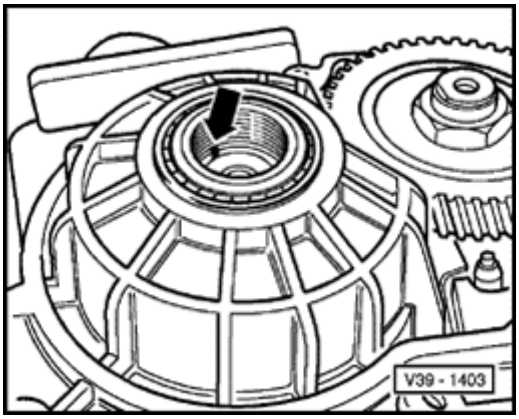

Fig. 3 Installing tapered roller bearing inner race

- Install tapered roller bearing inner race so that the lugs of the inner race engage in the grooves of the opposite inner race (arrow) ⇒ Fig. 4 .

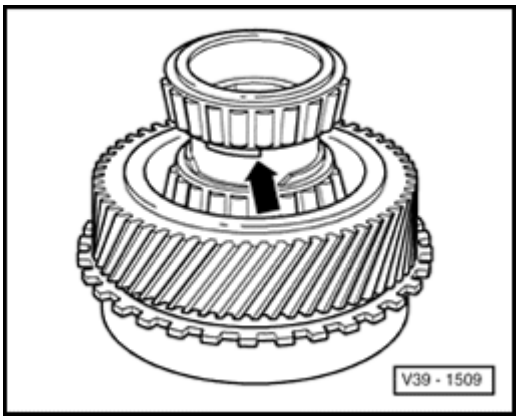

Fig. 4 Installation position of tapered roller bearing inner race

- Lug (arrow) must engage in groove of the opposite inner race.

Note:

Tapered roller bearings without lugs can also be installed.

39-13

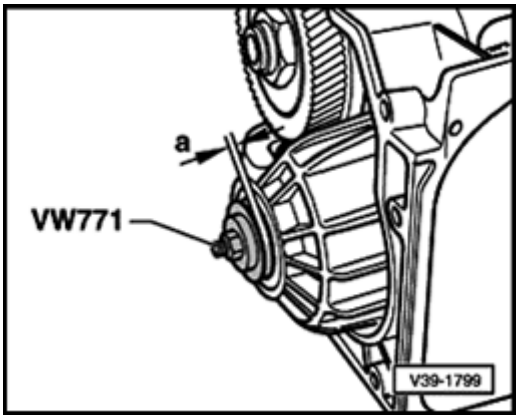

Fig. 5 Removing input gear

- Install socket-head fastener without dished washer, shim and axial needle bearing, just far enough so that gap -a- remains between socket-head fastener and tapered roller bearing inner race.
  - ♦ Gap -a- = approx. 3 mm (0.118 in.)
- Drive out input gear with VW 771 as far as the stop of the tapered roller bearing inner race.
- Remove VW 771 and remove input gear.

39-14

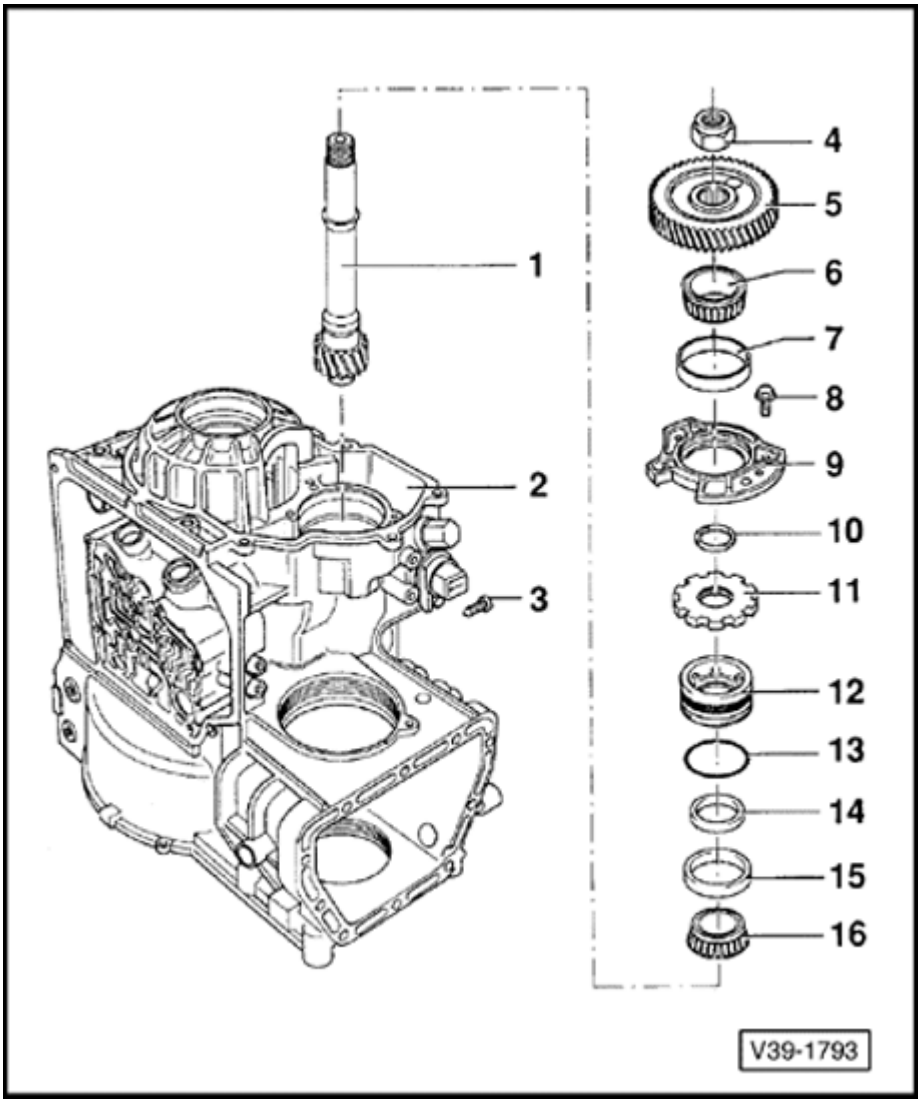

Drive pinion, removing and installing

Note:

To remove the drive pinion, the selector shaft must be removed after taking out the parking lock ⇒ page 38-31 , Parking lock, disassembling and assembling.

1 - Drive pinion

- Number of teeth ⇒ from page 00-3 , Technical data
- Adjusting ⇒ page 39-44
- Removing ⇒ Fig. 8

2 - Transmission housing

3 - Screw

- Tightening torque: 12 Nm (9 ft lb)
- Remove screw before removing or installing bearing supporting ring - 12 -
- Install with AKD45600001 sealing compound

39-15

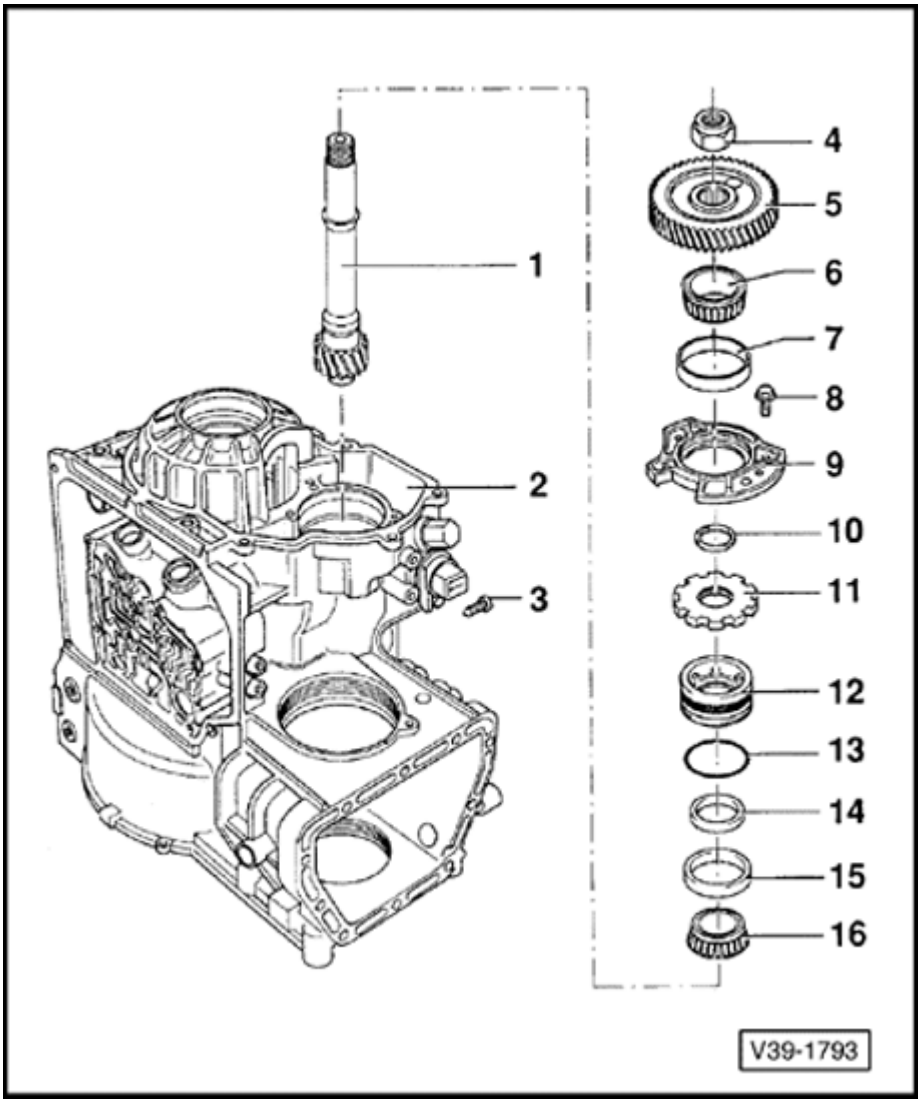

4 - Hex nut

- Tightening torque: 250 Nm (184 ft lb)
- Engage parking lock to remove or install
- Secure with drift

5 - Output gear

- Number of teeth ⇒ from page 00-3 , Technical data
- Pulling off ⇒ Fig. 1
- If signs of damage exist, always replace input gear and output gear together

6 - Tapered roller bearing inner race

- Pulling off ⇒ Fig. 2
- Pressing on ⇒ Fig. 3

7 - Tapered roller bearing outer race

- Drive out with drift
- Pressing in ⇒ Fig. 4

8 - Bolt

- Tightening torque: 25 Nm (18 ft lb)

9 - Bearing cap

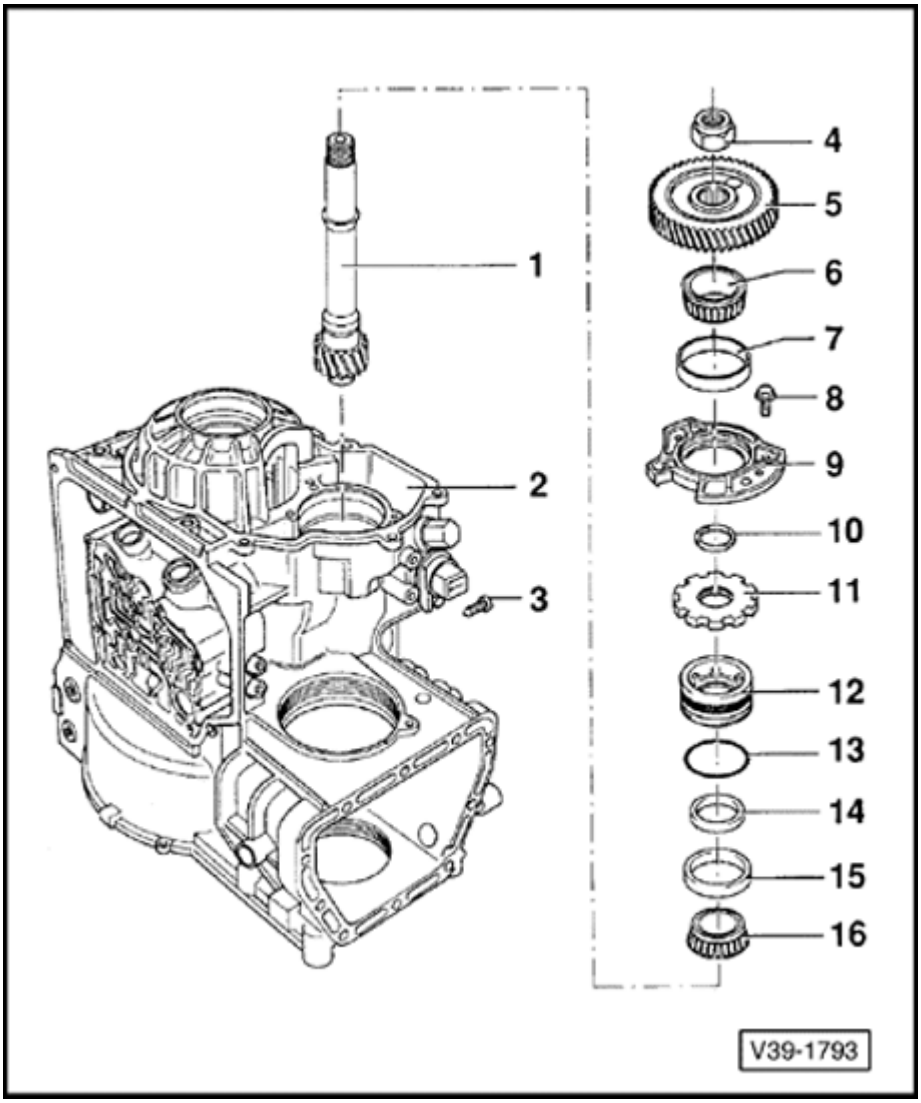

10 - Shim

- Determining thickness ⇒ page 39-44 , Drive pinion, adjusting

11 - Parking lock gear

- Rounded side faces teeth of drive pinion

12 - Bearing support ring

- Tightening torque: 200 Nm (148 ft lb)
- Remove screw - 3 - before removing or installing bearing support ring
- Removing or installing ⇒ Fig. 5
- Bearing support ring cannot be unscrewed until the selector shaft has been removed ⇒ page 38-31 , Parking lock, disassembling and assembling
- Install bearing supporting ring carefully. Sealing lip and spring must not be damaged.
- Supporting ring with seal ⇒ Fig. 6

39-17

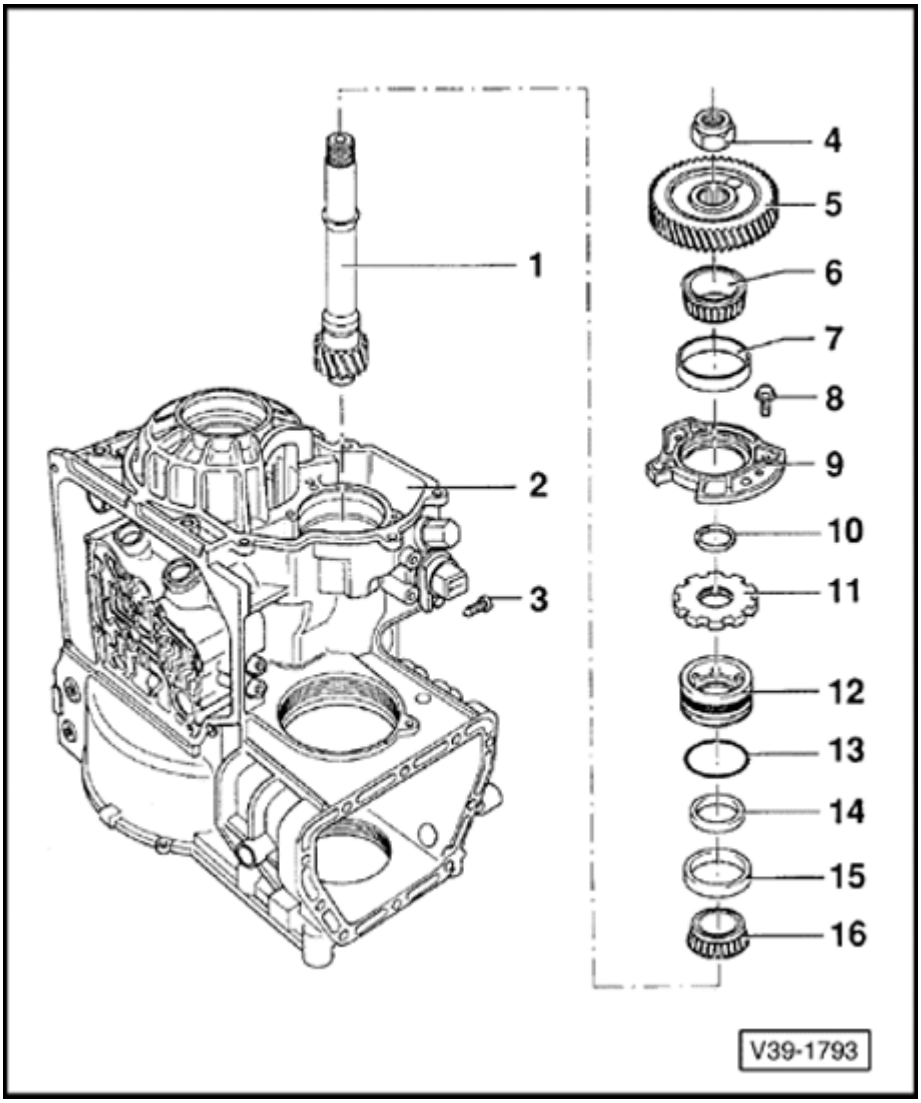

13 - O-ring

- Always replace
- Place onto bearing support ring - 12 -

14 - Oil seal for drive pinion

- Remove with screwdriver
- Installation position ⇒ Fig. 6
- Driving in ⇒ Fig. 7

15 - Tapered roller bearing outer race

- Driving in ⇒ Fig. 9

16 - Tapered roller bearing inner race

- Drive off with drift
- Pressing on ⇒ Fig. 10

39-18

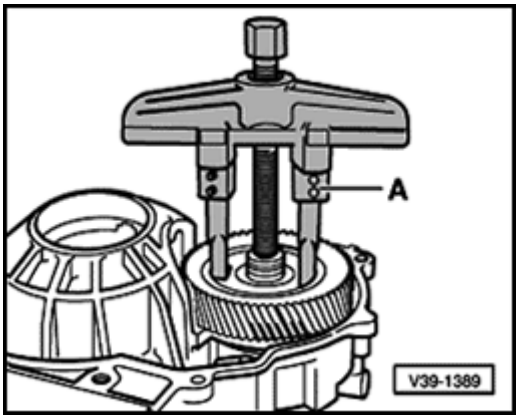

Fig. 1 Pulling off output gear

A - Kukko 20-10 and Matra V 172 pulling hooks

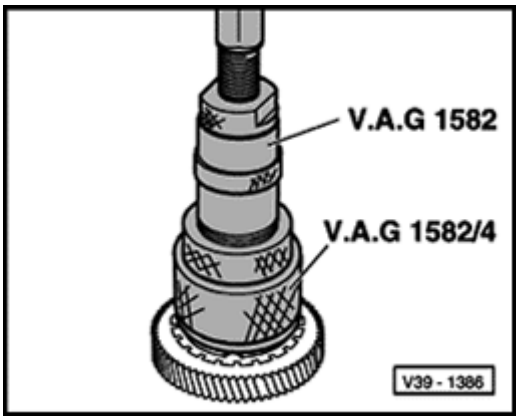

Fig. 2 Pulling off tapered roller bearing inner race

- Place press piece onto collar of output gear.

39-19

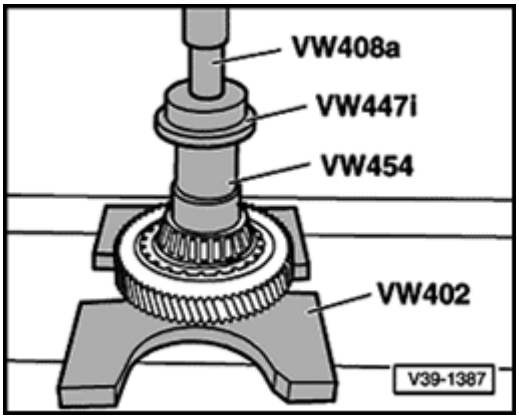

Fig. 3 Pressing on tapered roller bearing inner race

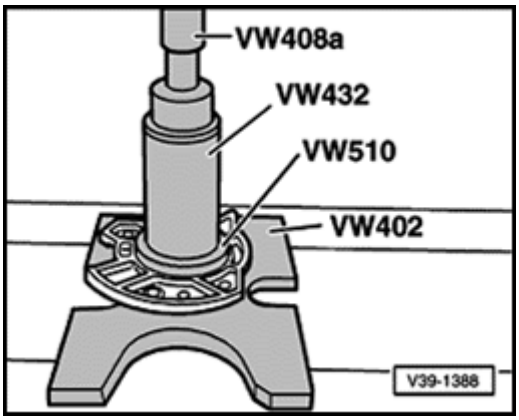

Fig. 4 Pressing in tapered roller bearing outer race

39-20

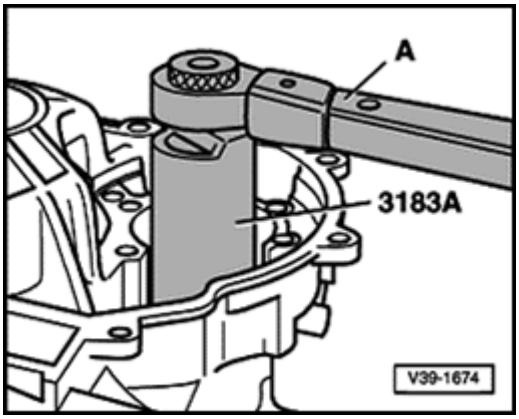

Fig. 5 Removing and installing bearing supporting ring

A - Torque wrench

- Tighten bearing supporting ring.
  - ♦ Tightening torque: 200 Nm (148 ft lb)
- Secure with locking screw. Install screw with thread sealing compound AKD45600001.

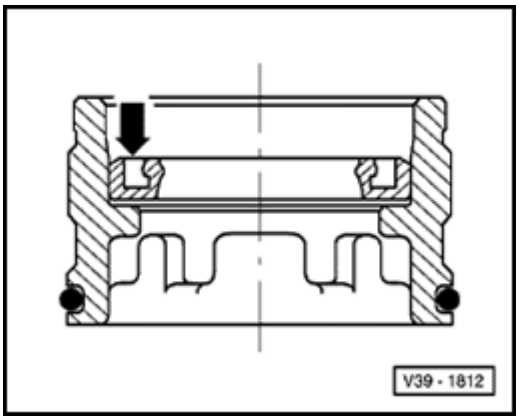

Fig. 6 Bearing supporting ring with seal for drive pinion

Installation position of seal:

- ♦ Open side (arrow) faces toward tapered roller bearing outer race

39-21

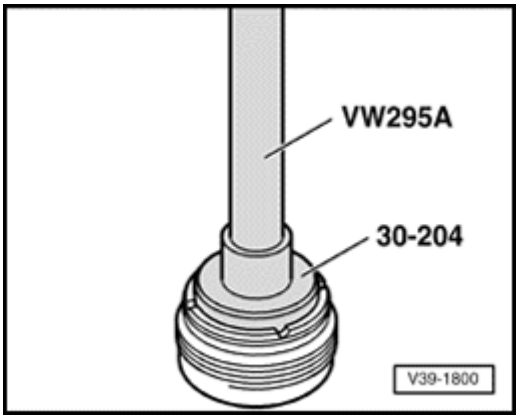

Fig. 7 Driving in drive pinion oil seal

- Install oil seal so that sealing lip faces special tool 30-204.

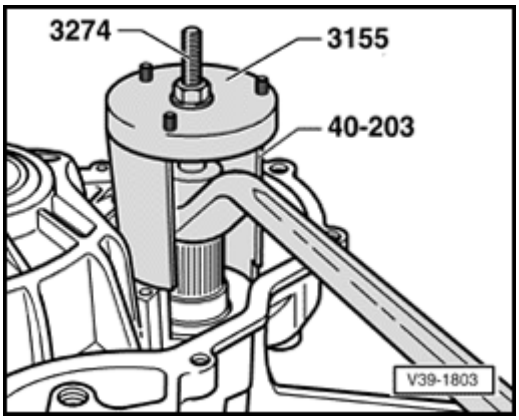

Fig. 8 Removing drive pinion

39-22

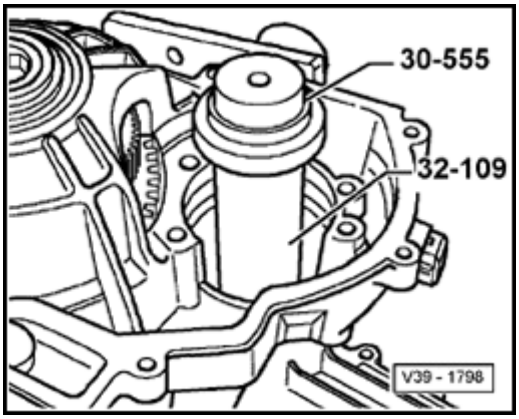

Fig. 9 Driving in tapered roller bearing outer race

- Install drive pinion with tapered roller bearing inner race, then drive in outer race.

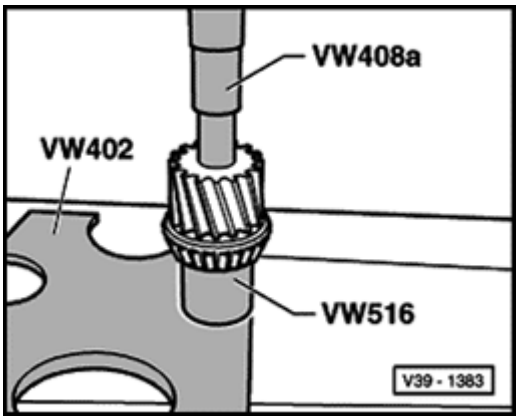

Fig. 10 Pressing on tapered roller bearing inner race

39-23

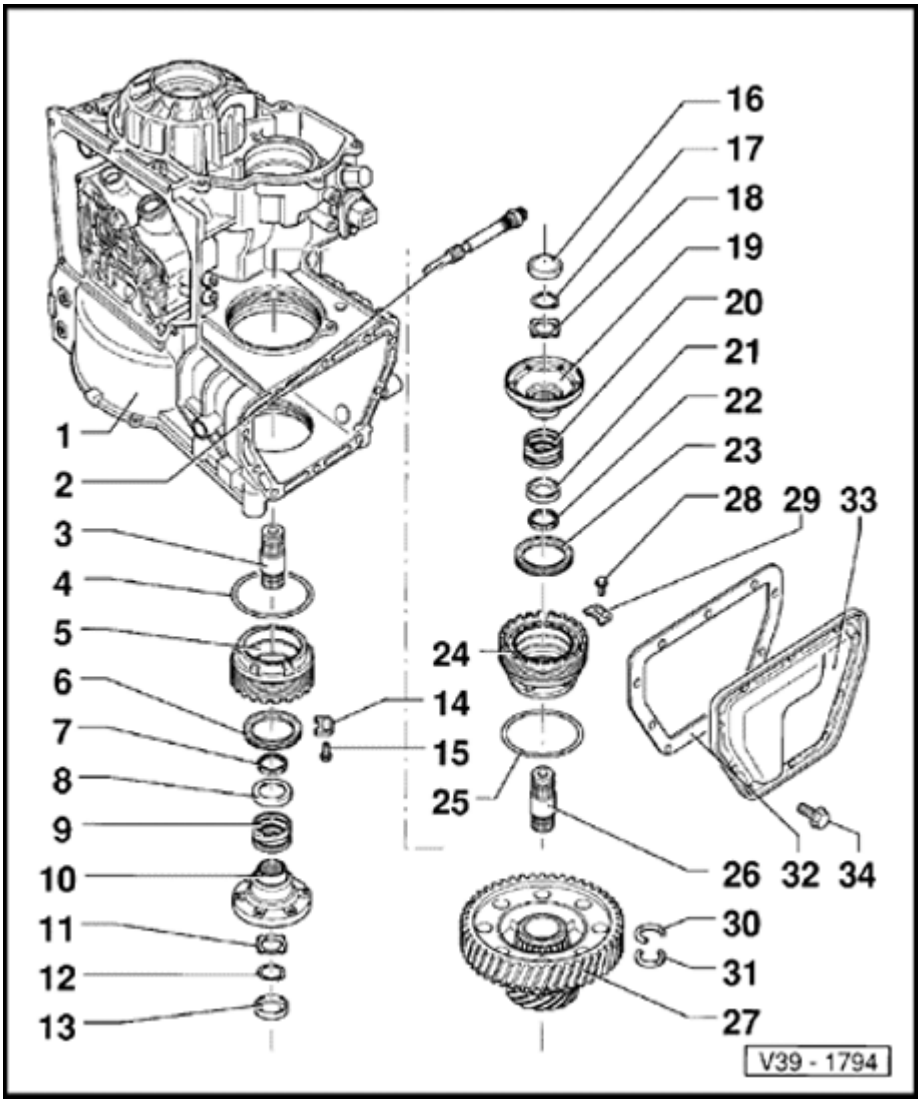

Differential, removing and installing

Note:

- *If tapered roller bearings are to be re-used, mark the adjusting ring ⇒ Fig. 2*
- *The drive pinion does not need to be removed for removing and installing the differential.*

1 - Transmission housing

2 - Speedometer drive

- With marking for oil level indication ⇒ Fig. 7

3 - Output shaft/drive flange

- Install thread facing drive flange
- Remove before taking out differential
- First adjust differential before installing

4 - O-ring

- Always replace

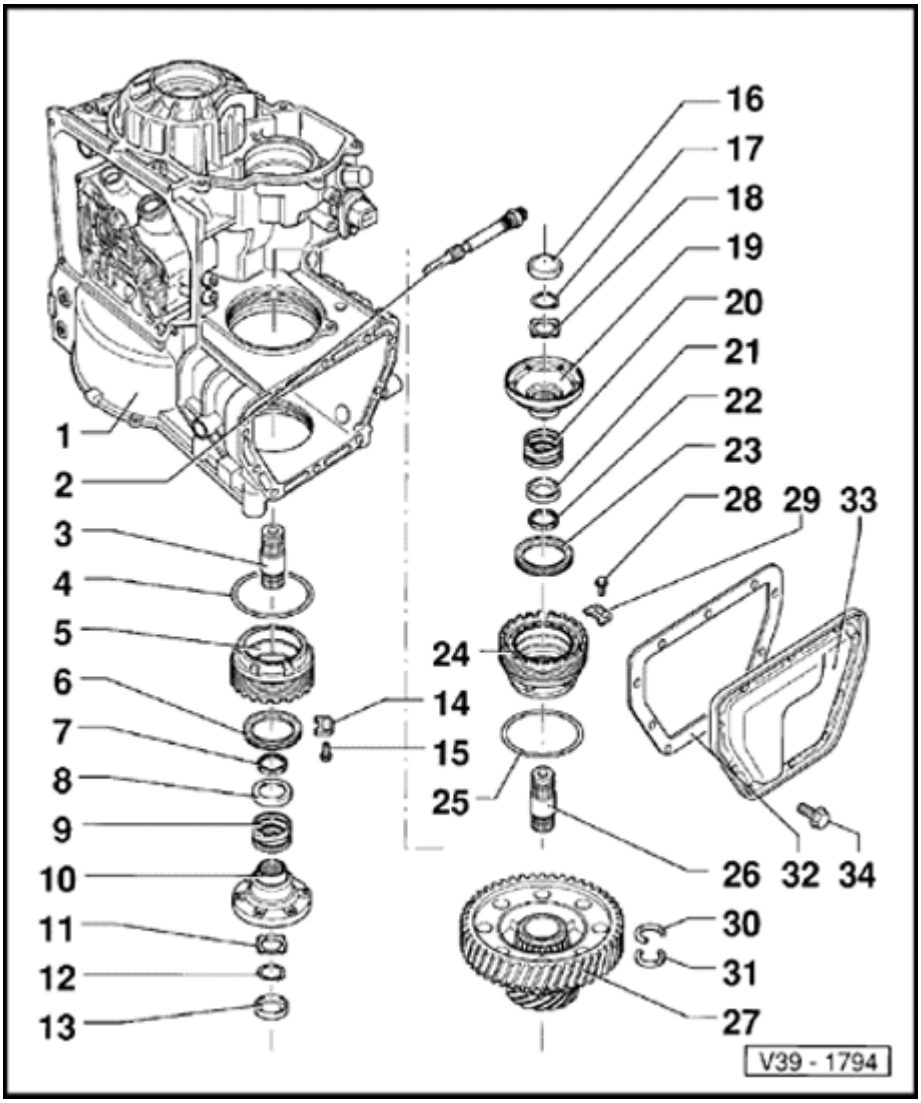

5 - Adjusting ring

- Removing ⇒ Fig. 3
- If used bearings are re-installed, mark installation position and line up on marking again when installing ⇒ Fig. 2
- If new bearings are installed, pay attention to setting instructions ⇒ page 39-51 , Differential, adjusting

6 - Oil seal for drive flange

- Before installing, pack space between sealing lips with multi-purpose grease
- Can be replaced with transmission installed ⇒ page 39-2
- Remove with VW 681
- Driving in ⇒ Fig. 1

7 - Tapered ring

- Shoulder faces thrust washer

8 - Thrust washer

- Place over compression spring

9 - Compression spring

39-25

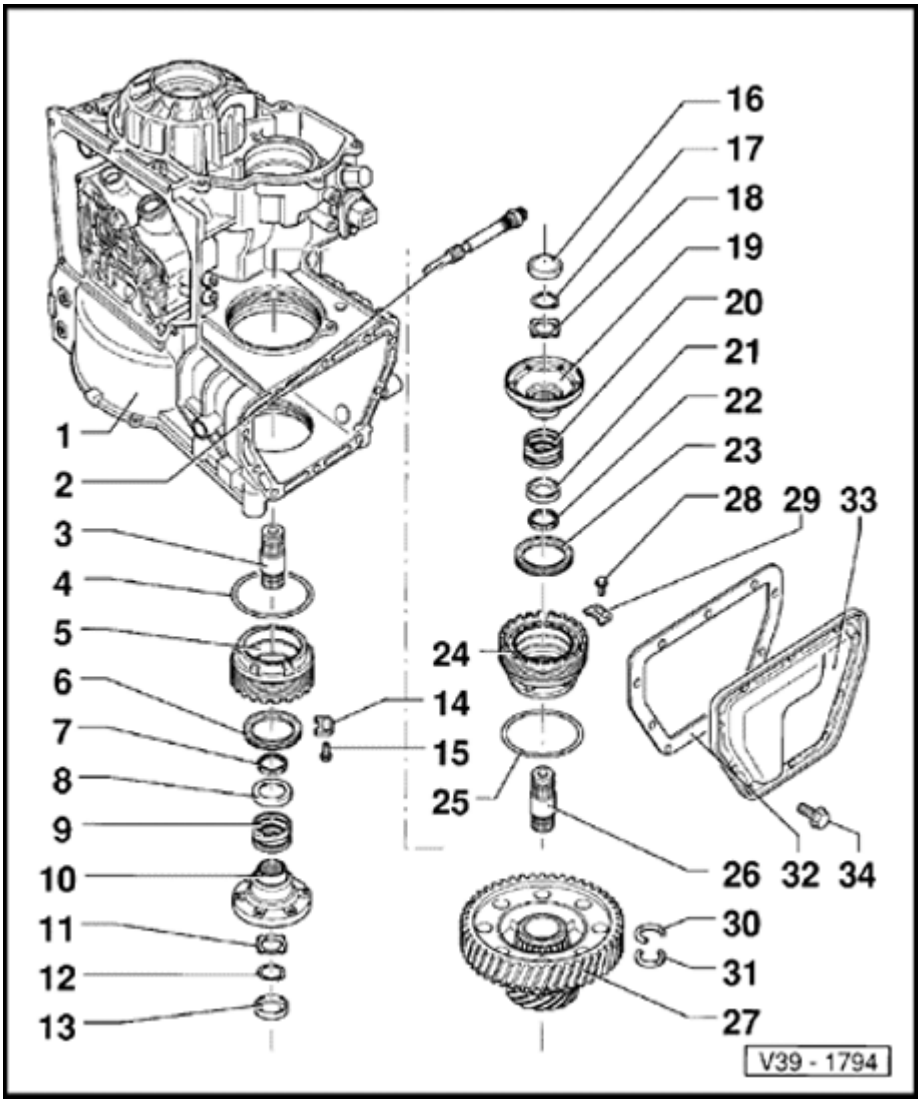

10 - Drive flange

- Install with tapered ring, thrust washer and compression spring
- Remove before taking out inner circlip on bevel gear
- Removing and installing ⇒ Fig. 4

11 - Dished washer

12 - Circlip

13 - Cover

14 - Locking element

15 - Screw

- Tightening torque: 12 Nm (9 ft lb)

16 - Cover

17 - Circlip

18 - Dished washer

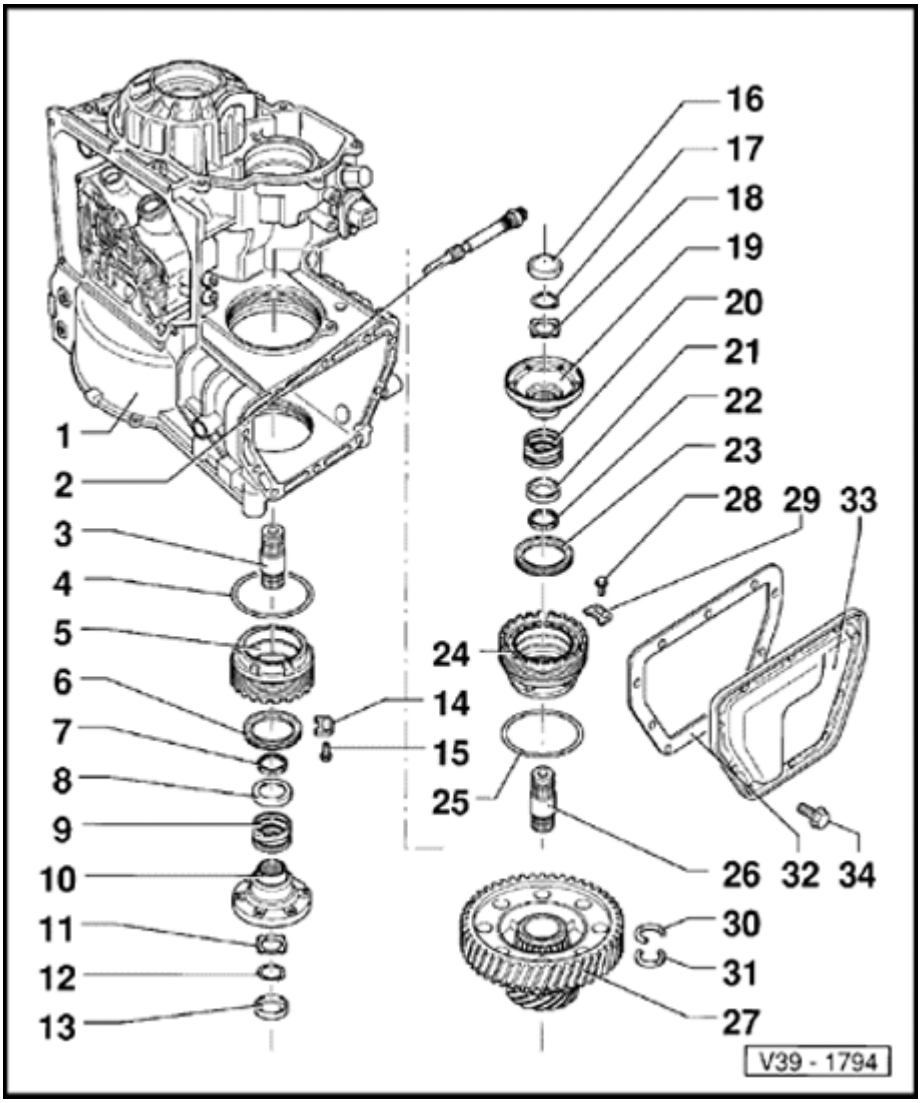

19 - Drive flange

- Install with tapered ring, thrust washer and compression spring
- Remove before taking out inner circlip on bevel gear
- Removing and installing ⇒ Fig. 4

20 - Compression spring

21 - Thrust washer

- Place over compression spring

22 - Tapered ring

- Shoulder faces thrust washer

23 - Oil seal for drive flange

- Before installing, pack space between sealing lips with multi-purpose grease
- Can be replaced with transmission installed ⇒ page 39-2
- Remove with VW 681
- Driving in ⇒ Fig. 1

39-27

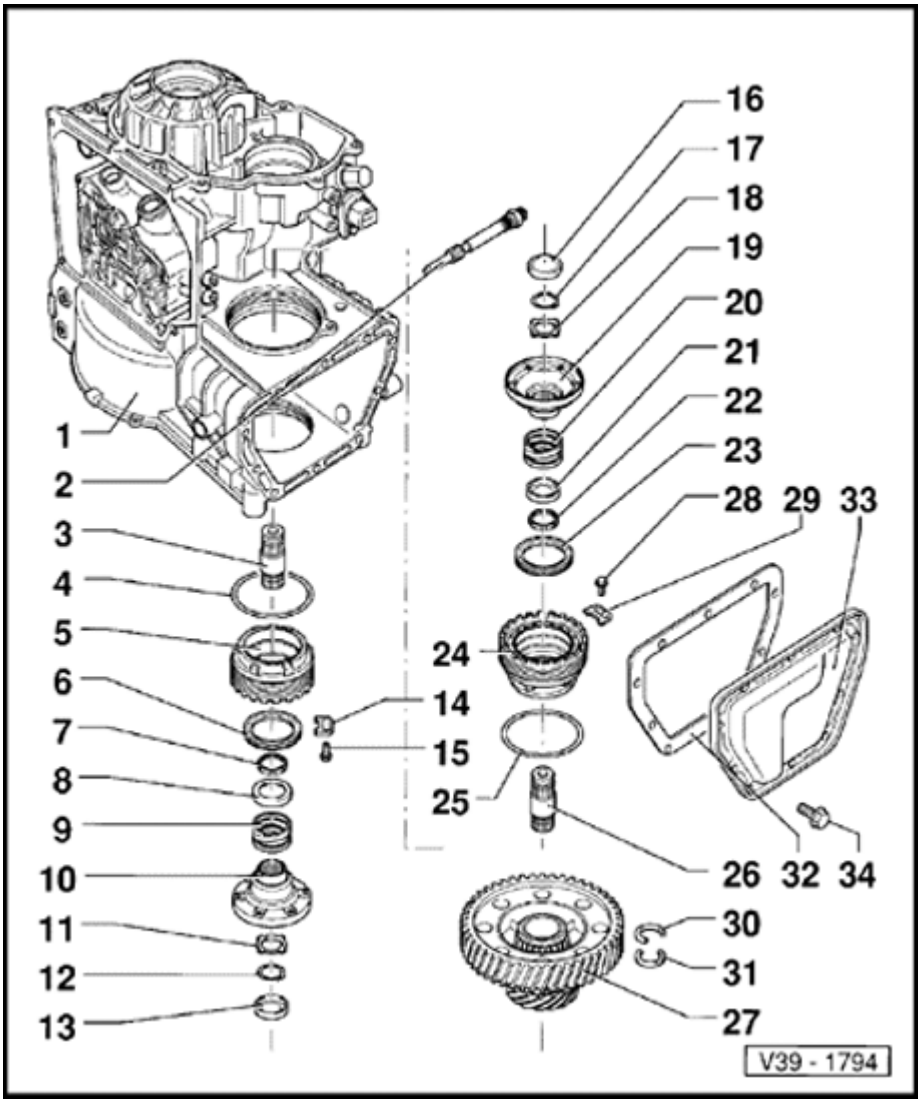

24 - Bearing body

- Tightening torque: 150 Nm (111 ft lb)
- When installing new bearing, pay attention to setting instructions ⇒ page 39-51 , Differential, adjusting
- Remove with tool 3155
- Installing ⇒ Fig. 5

25 - O-ring

- Always replace

26 - Output shaft/drive flange

- Install thread facing drive flange
- Before removing, take out differential
- First adjust differential before installing

27 - Differential

- Disassembling and assembling ⇒ page 39-33
- Before removing differential, take out bearing body, adjusting ring and output shafts

28 - Screw

- Tightening torque: 12 Nm (9 ft lb)

29 - Locking element

39-28

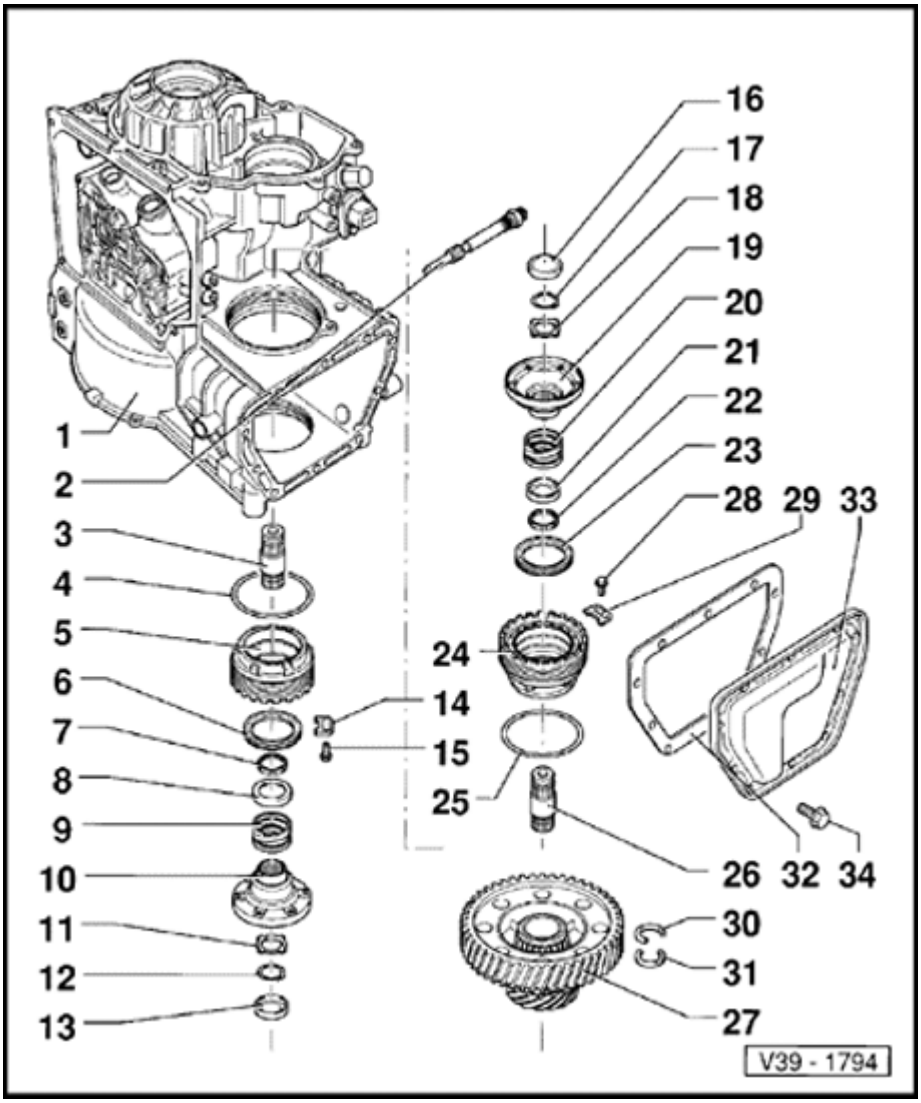

30 - Circlip

- First remove drive flange before removing circlip
- Removing and installing ⇒ Fig. 6

31 - Circlip

- First remove drive flange before removing circlip
- Removing and installing ⇒ Fig. 6

32 - Seal

- Always replace

33 - Cover

- For differential

34 - Screw

- Tightening torque: 28 Nm (21 ft lb)
- Install with thread locking fluid AMV 185 101 A1

Note:

After adjusting tapered roller bearings, secure bearing body and adjusting ring.

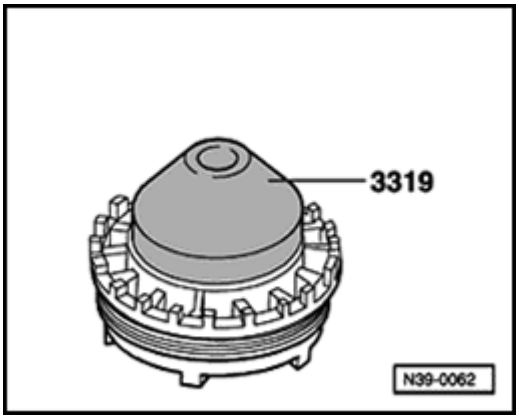

Fig. 1 Driving in drive flange oil seal up to stop

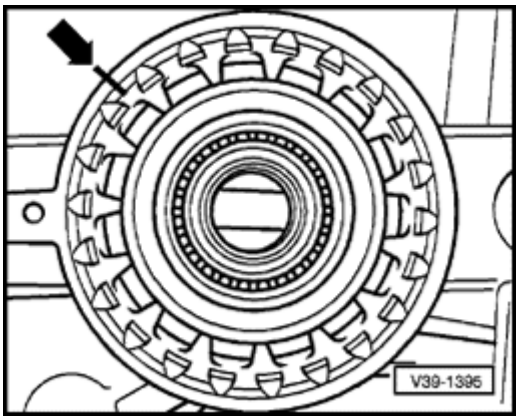

Fig. 2 Marking adjusting ring

- If used bearings are re-installed, mark installation position (arrow) and use marking to position adjusting ring when installing.

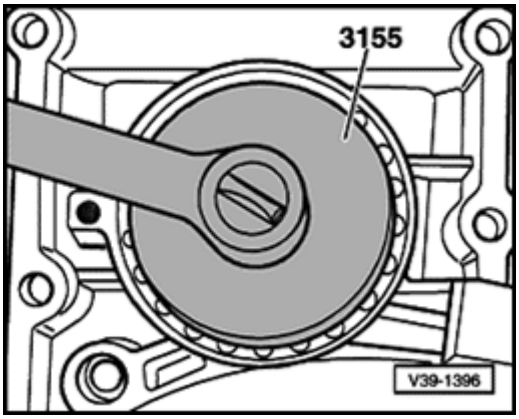

Fig. 3 Removing adjusting ring

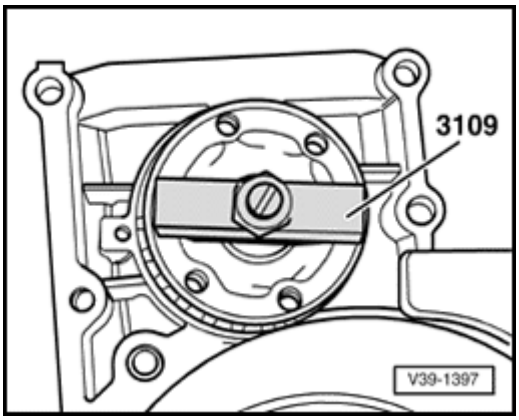

Fig. 4 Removing and installing drive flange

Note:

Drive flange can also be removed with VW 391.

39-31

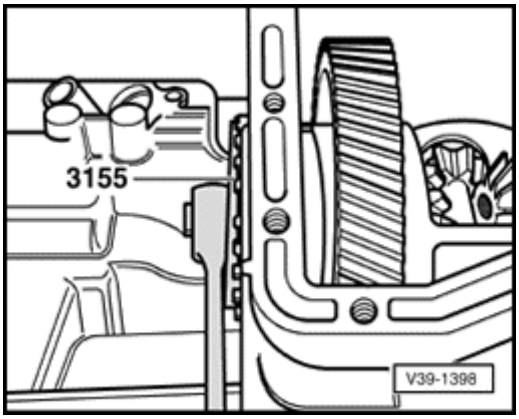

Fig. 5 Installing differential

- Screw in bearing body as far as stop, then tighten.
  - ♦ Tightening torque: 150 Nm (111 ft lb)

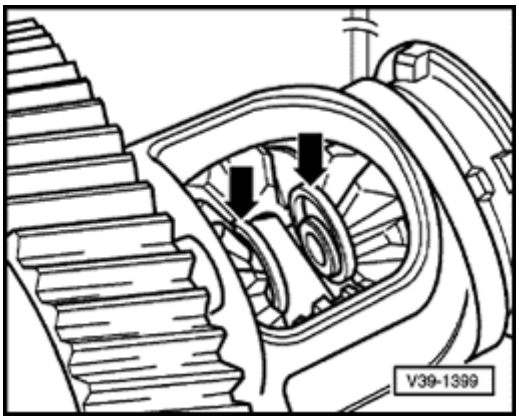

Fig. 6 Installing circlip

- Remove circlip (arrow) with two screwdrivers.

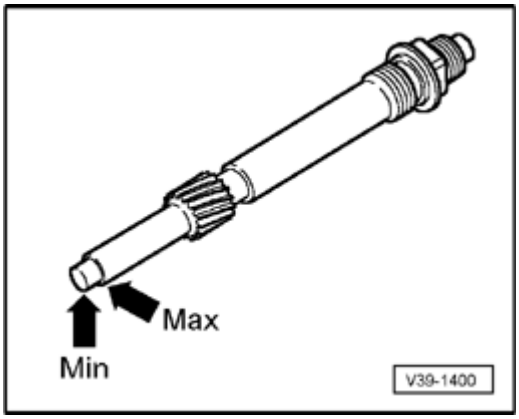

Fig. 7 Speedometer drive

- With transmission installed, check gear oil in final drive ⇒ page 39-1 .

39-33

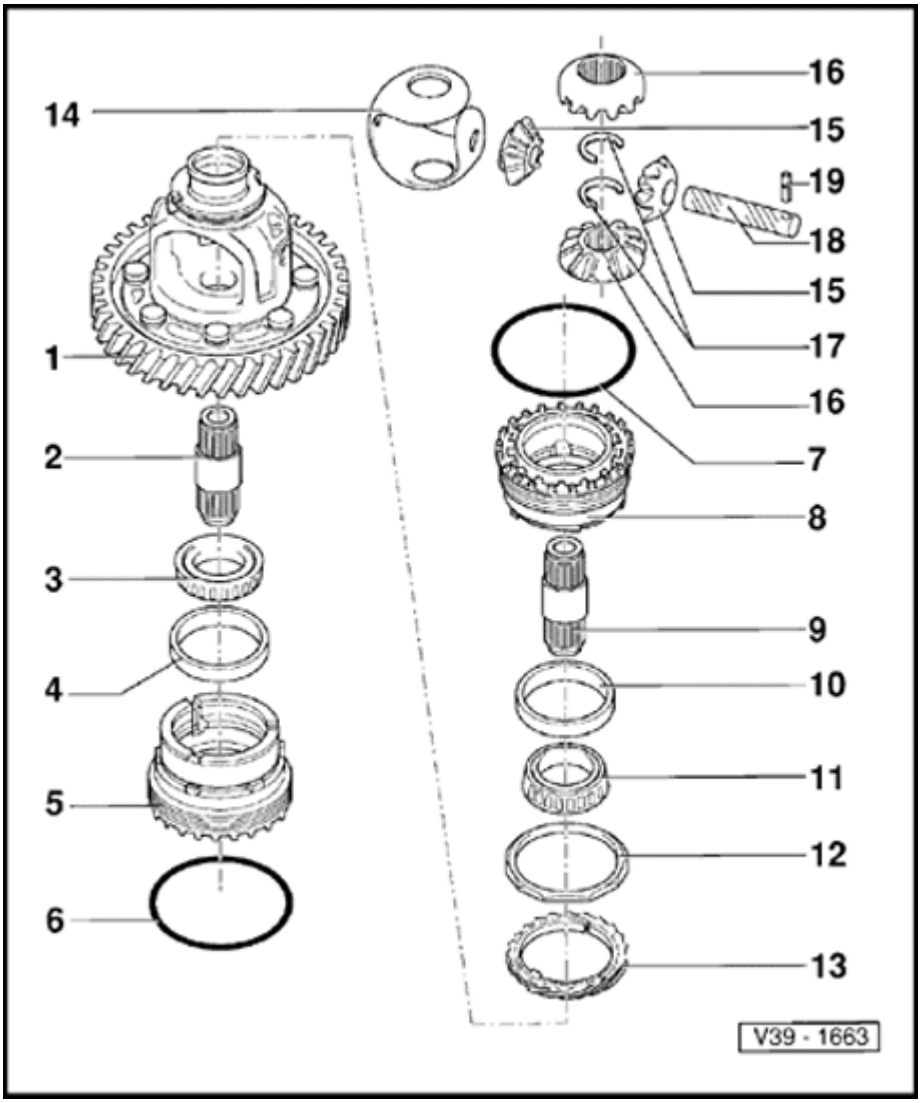

Differential, disassembling and assembling

Note:

- *Heat tapered roller bearing inner race to 100° C (212 ° F) before pressing on.*
- *Heat adjusting ring for tapered roller bearing to 100° C (212° F) before pressing in tapered roller bearing outer race.*

1 - Differential housing with riveted gear for final drive

- Final drive gear is riveted onto differential housing and then machined
- If differential or final drive gear is damaged, replace differential housing along with riveted final drive gear
- Number of teeth on final drive gear ⇒ from page 00-3 , Technical data

2 - Output shaft/drive flange

- Removing and installing ⇒ page 39-23

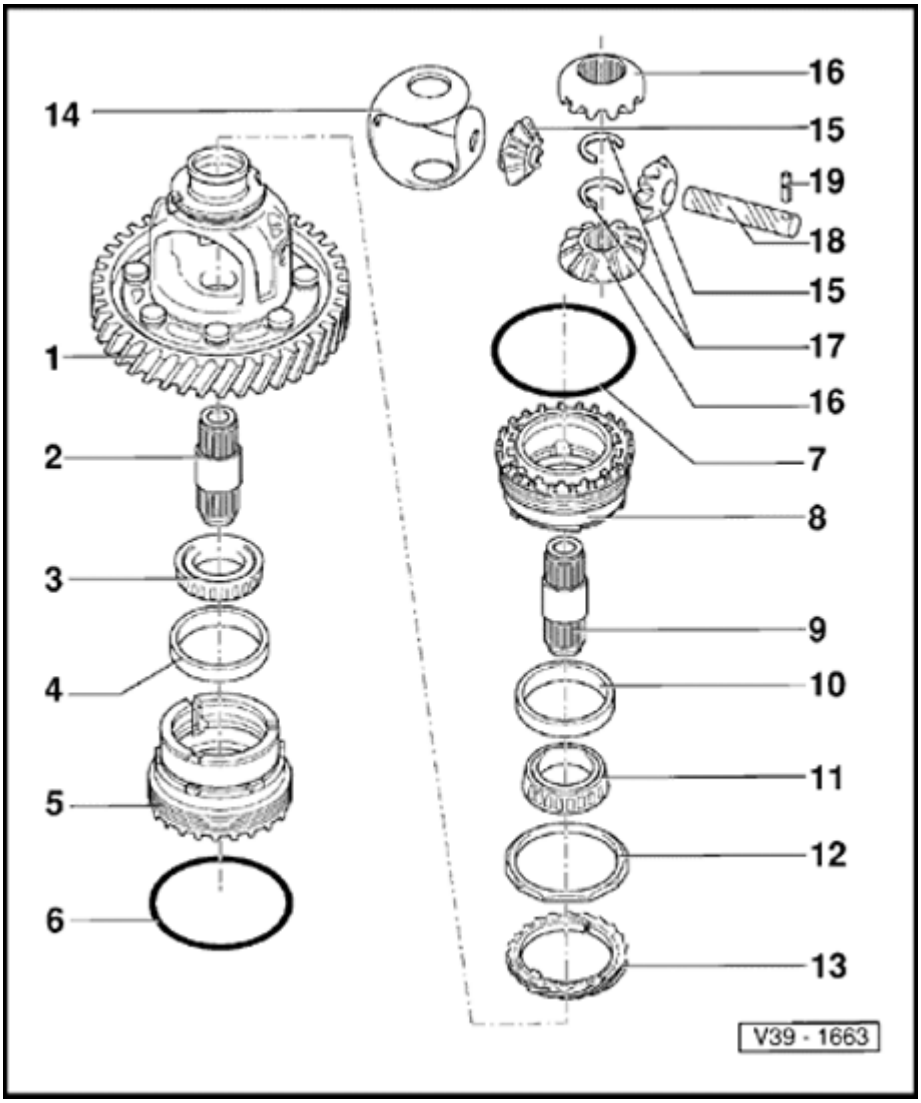

3 - Tapered roller bearing inner race

- Pulling off ⇒ Fig. 1
- Pressing on ⇒ Fig. 2

4 - Tapered roller bearing outer race

- Remove and install only when adjusting ring heated
- Drive out with drift
- Pressing in ⇒ Fig. 4

5 - Bearing body for tapered roller bearing

- Removing and installing ⇒ page 39-23 , Differential, removing and installing

6 - O-ring

- Always replace

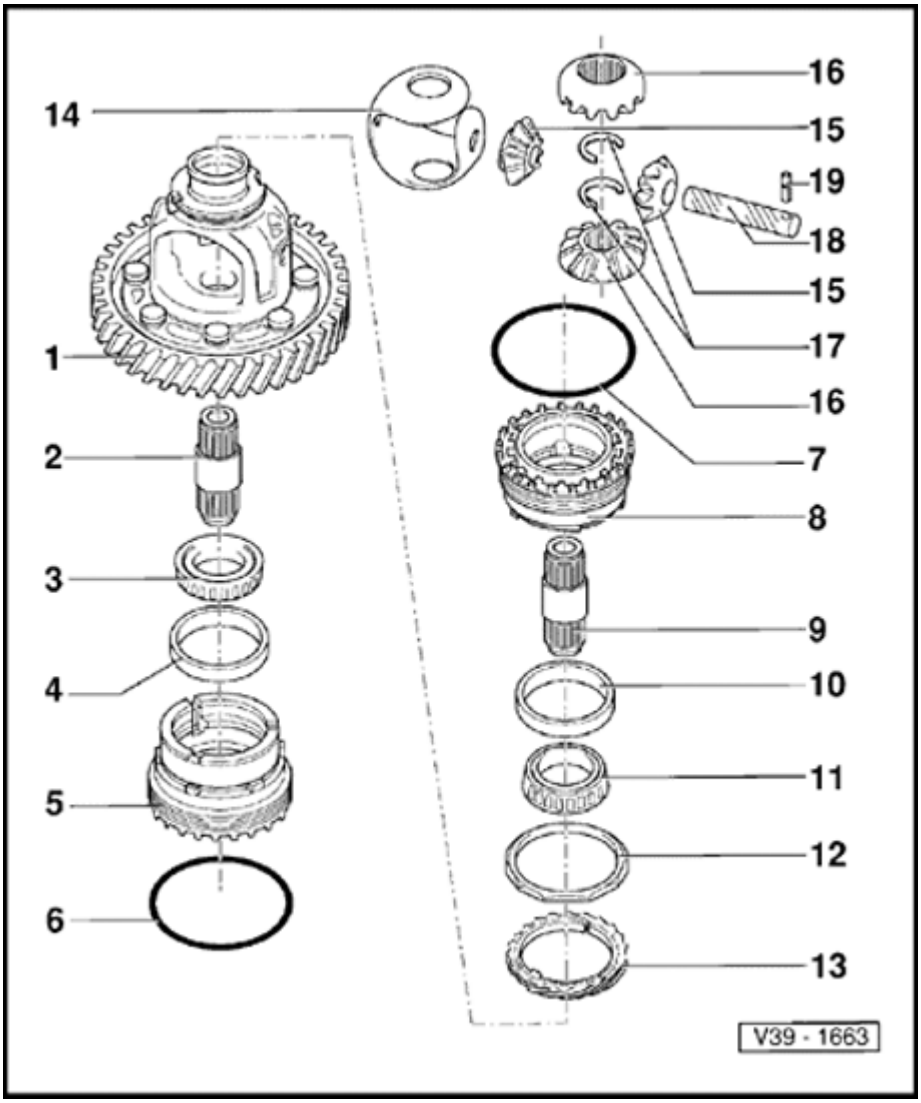

7 - O-ring

- Always replace

8 - Adjusting ring for tapered roller bearing

- Removing and installing ⇒ page 39-23 , Differential, removing and installing

9 - Output shaft/drive flange

- Removing and installing ⇒ page 39-23 , Differential, removing and installing

10 - Tapered roller bearing outer race

- Remove and install only when adjusting ring heated
- Drive out with drift
- Pressing in ⇒ Fig. 4

11 - Tapered roller bearing inner race

- Pulling off ⇒ Fig. 1
- Pressing on ⇒ Fig. 2

39-36

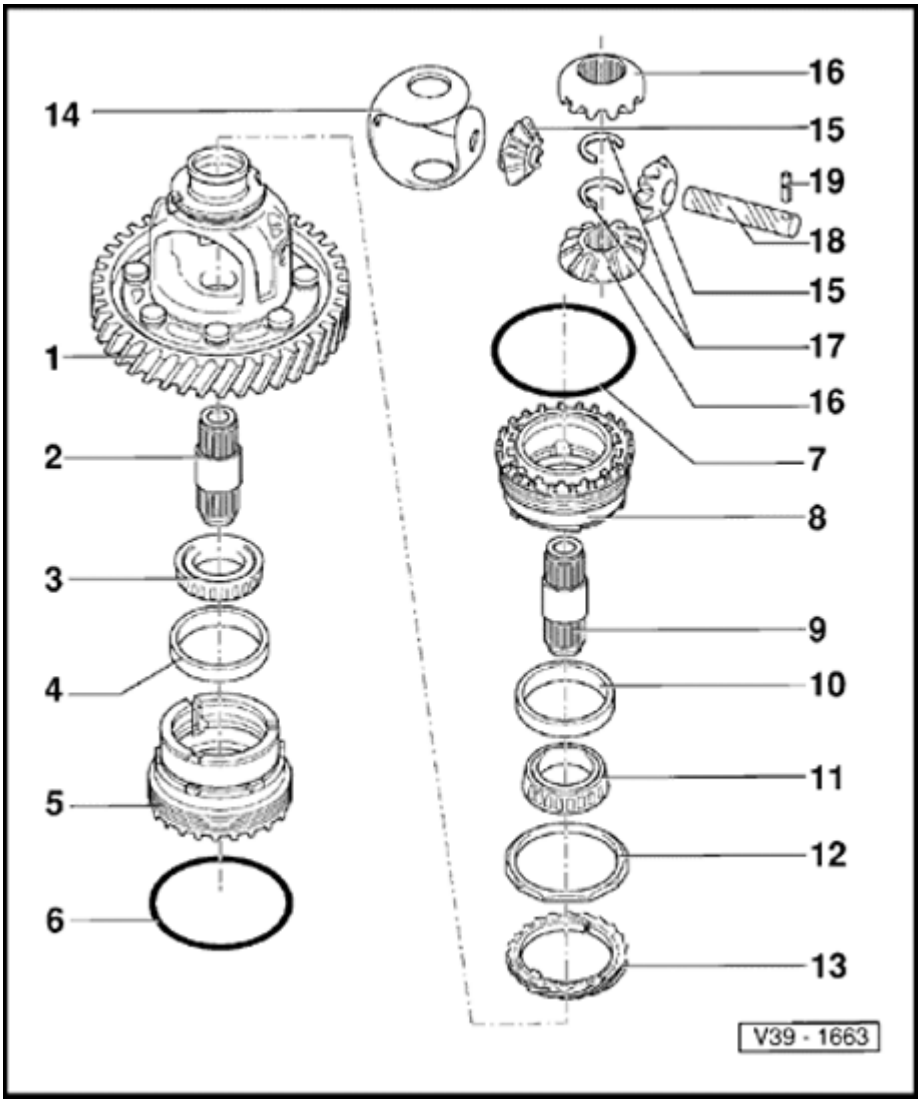

12 - Speedometer drive bushing

- Drive off together with speedometer drive gear - 13 -
- Drive on with drift

13 - Speedometer drive gear

- Drive out with drift
- Fit on together with driver bushing -item 12 -

14 - One-piece thrust washer

- Place into differential housing before installing bevel gears

15 - Small bevel gears

- Installing ⇒ Fig. 3

16 - Large bevel gears

- Installing ⇒ Fig. 3

17 - Circlip

CAUTION!

Do not remove the circlip until after removing the drive flange as the compression spring is pre-tensioned.

39-37

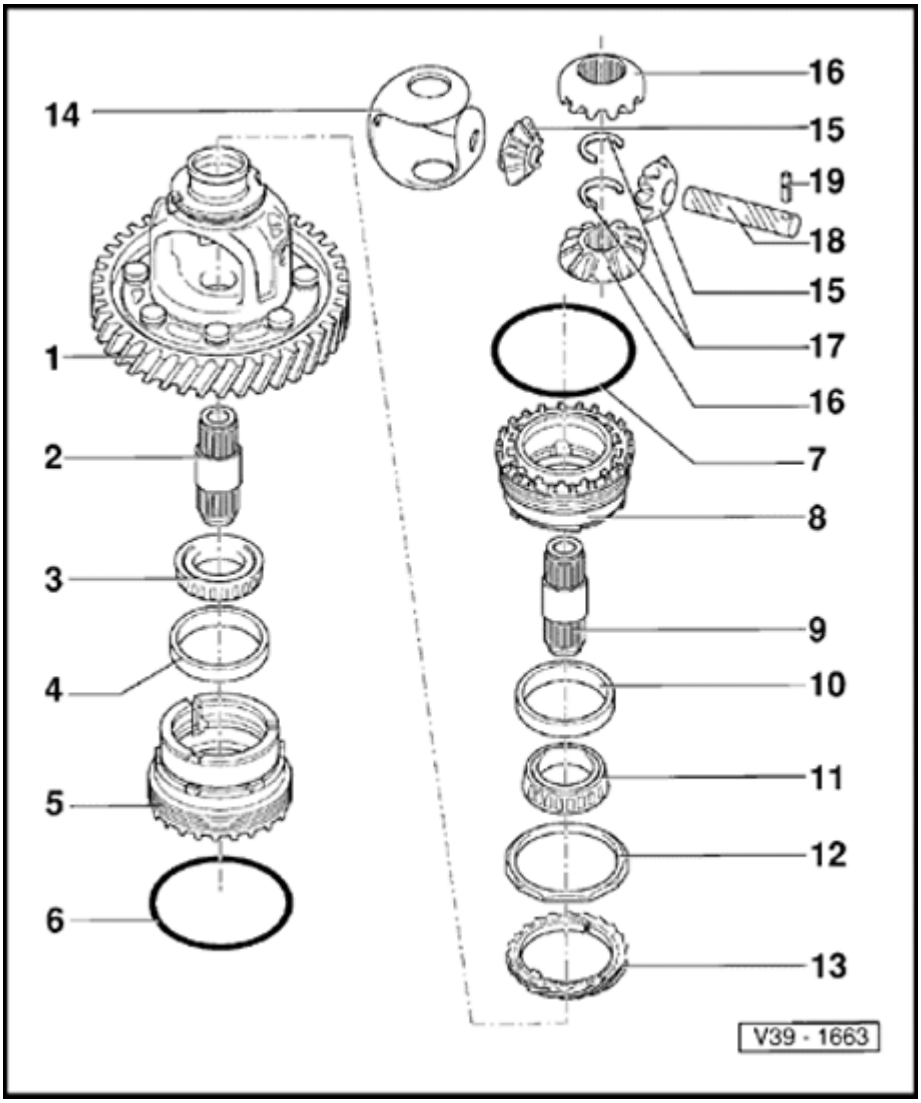

18 - Shaft for bevel gears

- Drive out with drift
- When driving in, do not damage one-piece thrust washer

19 - Spring pin

- For securing shaft for bevel gears
- Removing and installing spring pin with circumferential groove ⇒ Fig. 5

39-38

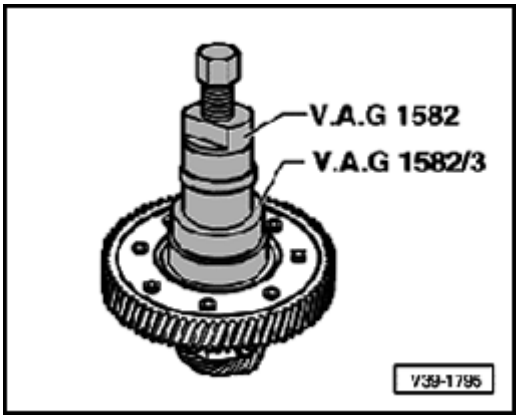

Fig. 1 Pulling off tapered roller bearing inner race

- Place press tool 30-555 on differential housing.

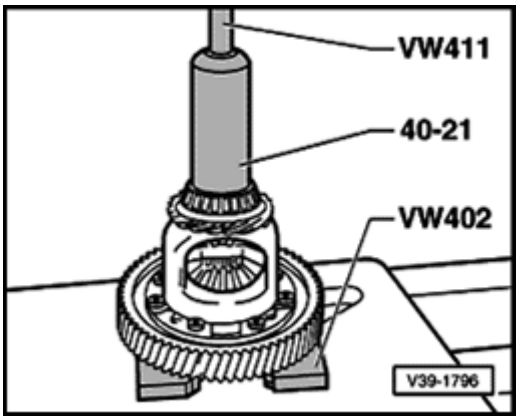

Fig. 2 Pressing on tapered roller bearing inner race

39-39

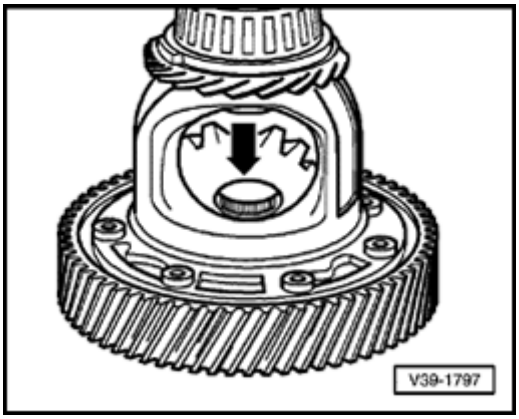

Fig. 3 Installing differential bevel gears

- Install one-piece thrust washer with gear oil.
- Install small bevel gears, drive in shaft and secure with spring pin.
- Install large bevel gears offset 180° and swivel in (in direction of arrow).

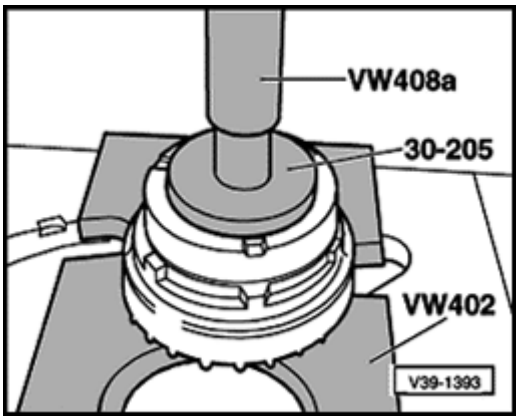

Fig. 4 Pressing in tapered roller bearing outer race

- With adjusting ring or bearing body heated, install outer race and press home as far as stop.

39-40

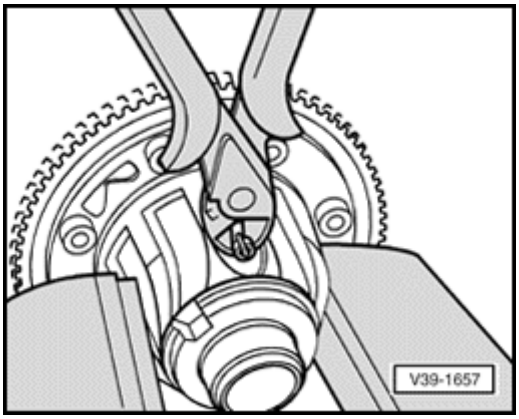

Fig. 5 Removing and installing spring pin with circumferential groove

- Length of spring pin: 28.5 mm (1.122 in.)

Removing

- Pull out spring pin with side-cutting pliers.

Installing

- Drive in spring pin as far as stop.

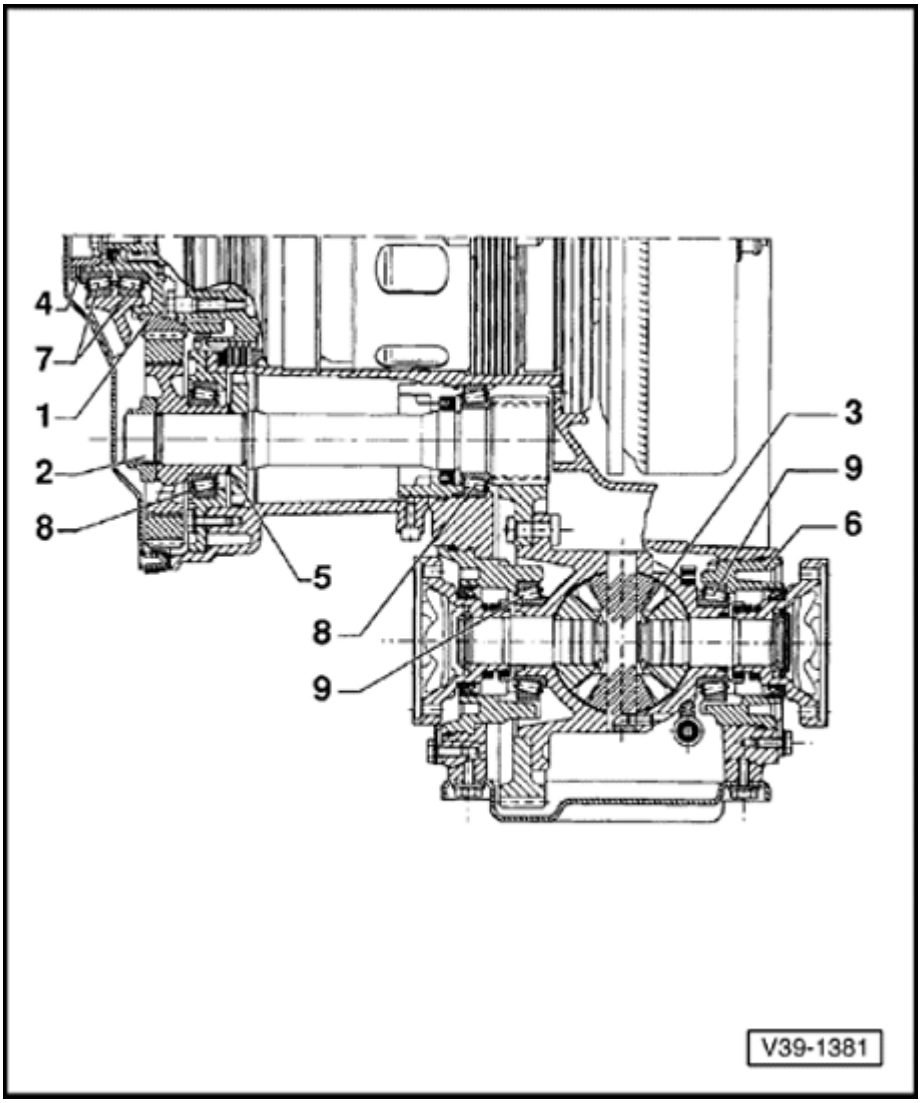

Final drive, adjusting

Adjustment overview

1 - Input gear

- Adjusting ⇒ page 39-48

2 - Drive pinion

- Adjusting ⇒ page 39-44

3 - Differential

- Adjusting ⇒ page 39-51

4 - Shim for input gear

- Determine thickness from table ⇒ page 39-46
- Determine Part No. from parts catalog microfiche

5 - Shim for drive pinion

- Determine thickness from table ⇒ page 39-46
- Determine Part No. from parts catalog microfiche

39-42

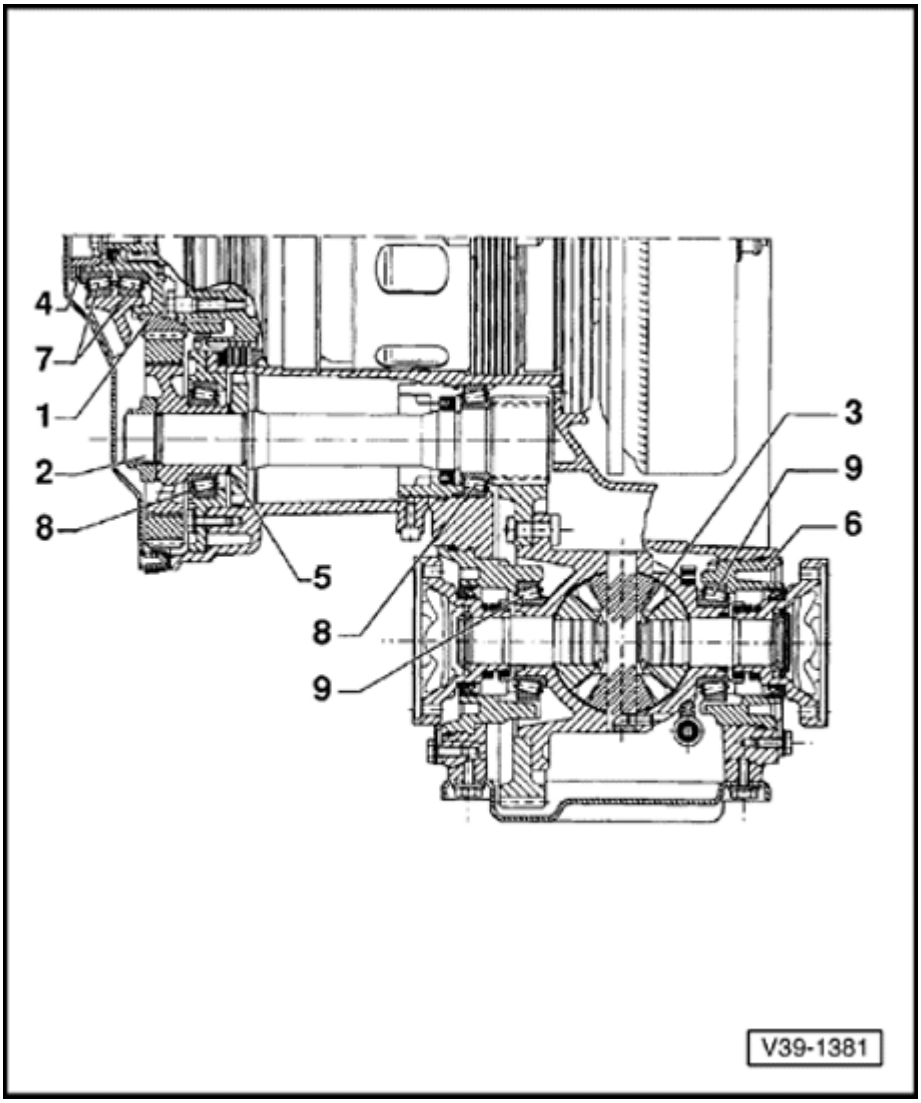

6 - Shim for differential

7 - Tapered roller bearings for input gear

- Always replace together
- Measure friction torque via pinion shaft. Friction torque of new tapered roller bearings must be 180-220 Ncm (16-20 in lb) greater than friction torque of pinion shaft

8 - Tapered roller bearings for drive pinion

- Always replace together
- Re-determine correct shim thickness when replacing tapered roller bearings

9 - Tapered roller bearings for differential

- Always replace together
- Measure friction torque via pinion shaft. Friction torque of new tapered roller bearings must be 60-80 Ncm (5-7 in lb) greater than friction torque of pinion shaft

Adjustments to be completed after replacing individual components

When working on transmission the following components only require adjustment if individual components have been replaced that directly affect the final drive adjustment. To eliminate unnecessary adjustments observe following table:

Components being replaced:	**To adjust:**		
	Differential housing with riveted gear wheel ⇒ page 39-51	Input gear1) ⇒ page 39-48	Drive pinion with output gear1) ⇒ page 39-44
Transmission housing	X	X	X
Input gear1)		X	X
Input gear tapered roller bearing		X	
Output gear1)		X	X
Drive pinion			X
Drive pinion tapered roller bearing			X
Differential housing with gear wheel	X		
Tapered roller bearing for differential, bearing body or shim	X		
Supporting ring, park lock gear or bearing cover			X

1) Always replace input gear and output gear together

39-44

Drive pinion, adjusting

Conditions:

- Supporting ring for drive pinion bearing installed and secured.
- Parking lock mechanism and parking lock gear installed.

Adjusting:

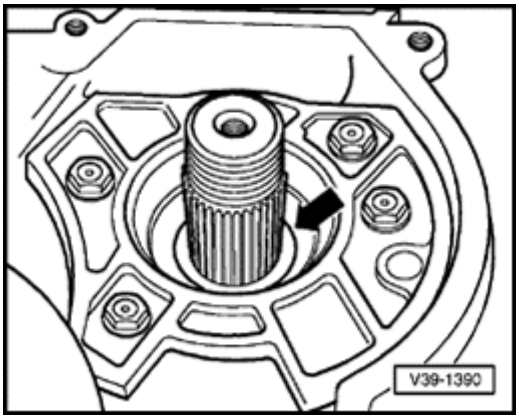

- Place two shims (arrow), each 1.5 mm thick, onto the drive pinion.
- Place output gear with tapered roller bearing onto drive pinion and tighten hex nut (41 mm AF).
  - Engage parking lock when performing this step.
    - ♦ Tightening torque: 250 Nm (184 ft lb)

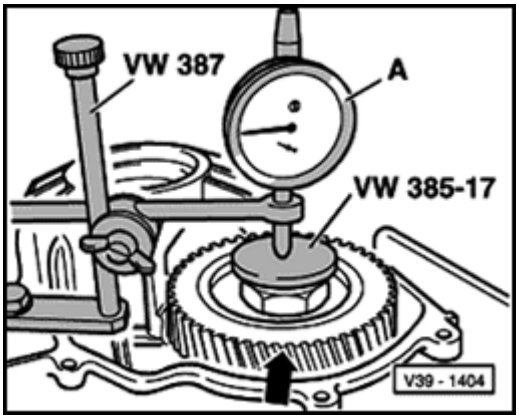

- Insert dial indicator -A- and zero gauge with 1 mm preload. Moving drive pinion up and down, read and record axial play (example 0.93 mm).

Note:

Do not rotate the drive pinion while making this measurement, as the bearings will otherwise settle and falsify the result of the measurement.

Determining shim thickness

The specified bearing preload is achieved if the reading (example: 0.93 mm), the specified bearing preload (0.12 mm) and the amount allowed for compression (0.10mm) are deducted from the 2 x 1.5 mm thick shims.

Example:

Shims installed (2 x 1.5 mm)	3.00 mm
- Dial indicator reading	- 0.93 mm
- Preload	- 0.12 mm
- Amount for compression	- 0.10 mm
= Thickness of shim	1.85 mm

- Remove output gear. Determine correct shim size from table, ⇒ page 39-46 , and install shim on drive pinion.

- Re-install output gear, tighten hex nut, and secure with drift.

  - Tightening torque: 250 Nm (184 ft lb)

39-46

Table of shims for drive pinion and input gear

Measured thickness - mm	Shim thickness - mm	Measured thickness - mm	Shim thickness - mm	Measured thickness - mm	Shim thickness - mm
0.975 - 0.999	1.000	1.550 - 1.574	1.575	2.125 - 2.149	2.150
1.000 - 1.024	1.025	1.575 - 1.599	1.600	2.150 - 1.274	2.175
1.025 - 1.049	1.050	1.600 - 1.624	1.625	2.175 - 2.199	2.200
1.050 - 1.074	1.075	1.625 - 1.649	1.650	2.200 - 2.224	2.225
1.075 - 1.099	1.100	1.650 - 1.674	1.675	2.225 - 2.249	2.250
1.100 - 1.124	1.125	1.675 - 1.699	1.700	2.250 - 2.274	2.275
1.125 - 1.149	1.150	1.700 - 1.724	1.725	2.275 - 2.299	2.300
1.150 - 1.174	1.175	1.725 - 1.749	1.750	2.230 - 2.324	2.325
1.175 - 1.199	1.200	1.750 - 1.774	1.775	2.325 - 2.349	2.350
1.200 - 1.224	1.225	1.775 - 1.799	1.800	2.350 - 2.374	2.375
1.225 - 1.249	1.250	1.800 - 1.824	1.825	2.375 - 2.399	2.400
1.250 - 1.274	1.275	1.825 - 1.849	1.850	2.400 - 2.424	2.425
1.275 - 1.299	1.300	1.850 - 1.874	1.875	2.425 - 2.449	2.450
1.300 - 1.324	1.325	1.875 - 1.899	1.900	2.450 - 2.474	2.475
1.325 - 1.349	1.350	1.900 - 1.924	1.925	2.475 - 2.499	2.500
1.350 - 1.374	1.375	1.925 - 1.949	1.950	2.500 - 2.524	2.525
1.375 - 1.399	1.400	1.950 - 1.974	1.975	2.525 - 2.549	2.550
1.400 - 1.424	1.425	1.975 - 1.999	2.000	2.550 - 2.574	2.575
1.425 - 1.449	1.450	2.000 - 2.024	2.025	2.575 - 2.599	2.600
1.450 - 1.474	1.475	2.025 - 2.049	2.050	2.600 - 2.624	2.625
1.475 - 1.499	1.500	2.050 - 2.074	2.075	2.625 - 2.649	2.650
1.500 - 1.524	1.525	2.075 - 2.099	2.100	2.650 - 2.674	2.675
1.525 - 1.549	1.550	2.100 - 2.124	2.125	2.675 - 2.700	2.700

Note:

- *Different tolerances enable the required shim thickness to be measured precisely.*
- *Part numbers for shims ⇒ parts catalog microfiche.*

39-47

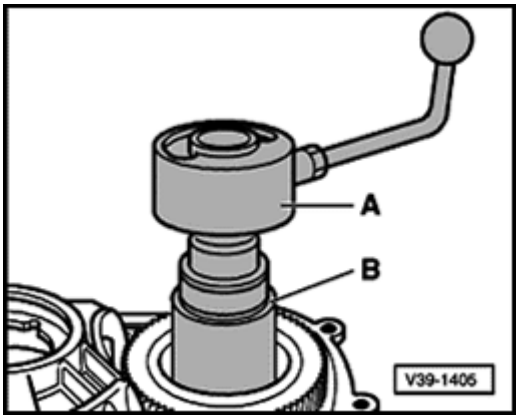

Checking friction torque

A - Torque gauge, commercially available, 0-600 Ncm (0-50 in lb)

B - Wrench socket (41 mm AF)

- Oil bearing beforehand with gear oil.

  - Friction torque of new tapered roller bearings must be 80-120 Ncm (7-11 in lb).

39-48

Input gear, adjusting

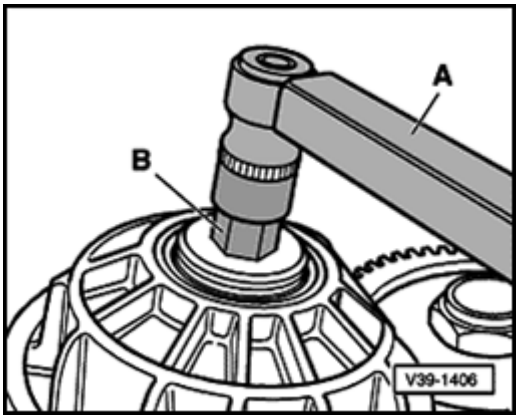

- Tighten socket-head fastener to 100 Nm (74 ft lb) without dished washer and without shim.

• The parking lock must be engaged.

A - Torque wrench

B - 22 mm socket

- Remove socket-head fastener.

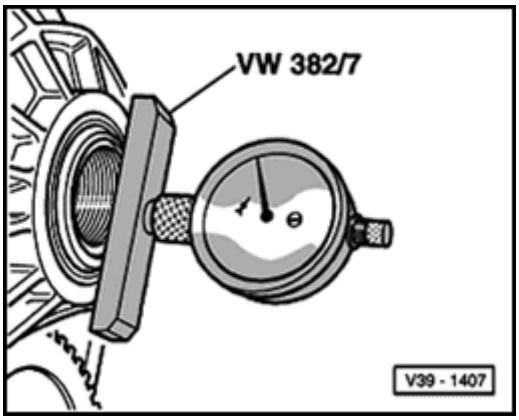

- Measure distance between input gear and tapered roller bearing inner race.
- Insert dial indicator and zero gauge with 3 mm preload. Note reading (example 1.00 mm).

  The 1.50 mm thickness of the dished washer must be added to the reading.

Example:

1.00 mm + 1.50 mm = 2.50 mm

Determining shim thickness

The correct shim thickness determined by deducting the specified bearing preload of 0.18 mm from the figure of 2.50 mm (example) obtained from the measurement.

Example:

Dished washer thickness (1.50 mm) + dial indicator measurement (example: 1.00 mm)	2.50 mm
- Bearing preload	- 0.18 mm
= Thickness of shim	2.32 mm

- Determine shim from table and fit onto drive shaft. Table of shims ⇒ page 39-46 .

- Insert axial needle bearing and tighten socket-head fastener including dished washer.

  ♦ Tightening torque: 250 Nm (184 ft lb)

Note:

Insert axial needle bearing for input shaft before tightening socket-head fastener. Installation position ⇒ page 39-8 , Input gear, removing and installing.

39-50

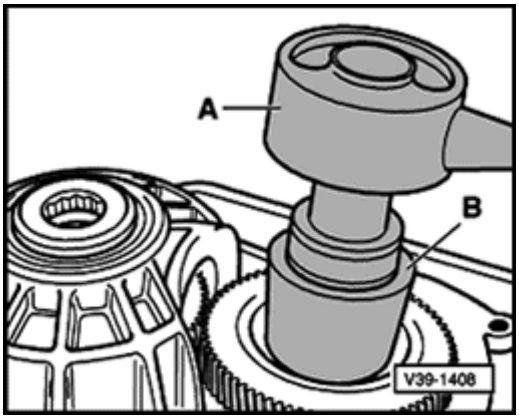

Checking friction torque

A - Torque gauge, commercially available 0-600 Ncm (0-50 in lb)

B - Socket (41 mm AF)

- Moisten bearings beforehand with ATF.

The friction torque of new tapered roller bearings must be 180-220 Ncm (16-20 in lb) greater than the friction torque at the drive pinion.

- Moisten bearings beforehand with ATF.

Example:

	Friction torque
Drive pinion (from measurement)	100 Ncm1)
Input gear (average)	200 Ncm
Friction torque of input gear + drive pinion	300 Ncm

1) In the case of used bearings, substitute the friction measured for the drive pinion.

39-51

Differential, adjusting

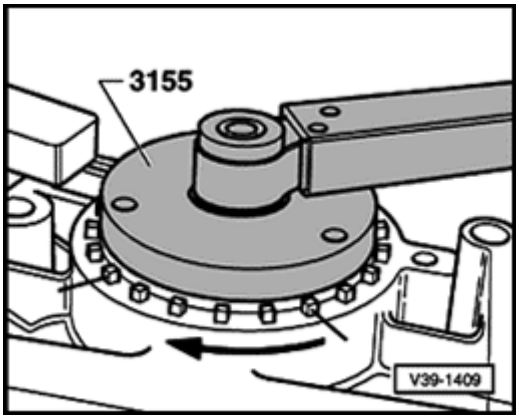

- Tighten bearing body with tool 3155 as far as the stop and secure.
  - Tightening torque: 150 Nm (111 ft lb)
- Tighten adjusting ring and mark its position.
  - Tightening torque: 50 Nm (37 ft lb)

Note:

Do not rotate the differential while making this measurement, as the bearings will otherwise settle and falsify the result of the measurement.

- Turn adjusting ring again so it advances the distance of five locking lugs, then secure so that preload of tapered roller bearings is set.

39-52

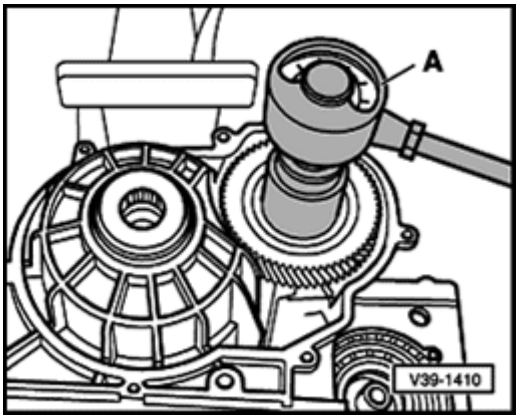

Checking friction torque

A - Torque gauge, commercially available 0-600 Ncm (0-50 in lb)

B - Socket (41 mm AF)

- Oil bearing beforehand with gear oil.

Example:

	Friction torque
Drive pinion (measurement)	300 Ncm1)
Differential (average)	70 Ncm
Friction torque of differential + drive pinion	370 Ncm

1) In the case of used bearings, substitute the friction measured for the drive pinion.

Volkswagen Passat

Official Factory Repair Manual

1995, 1996, 1997
Gasoline, Turbo Diesel, TDI
4-cylinder and VR6, including wagon

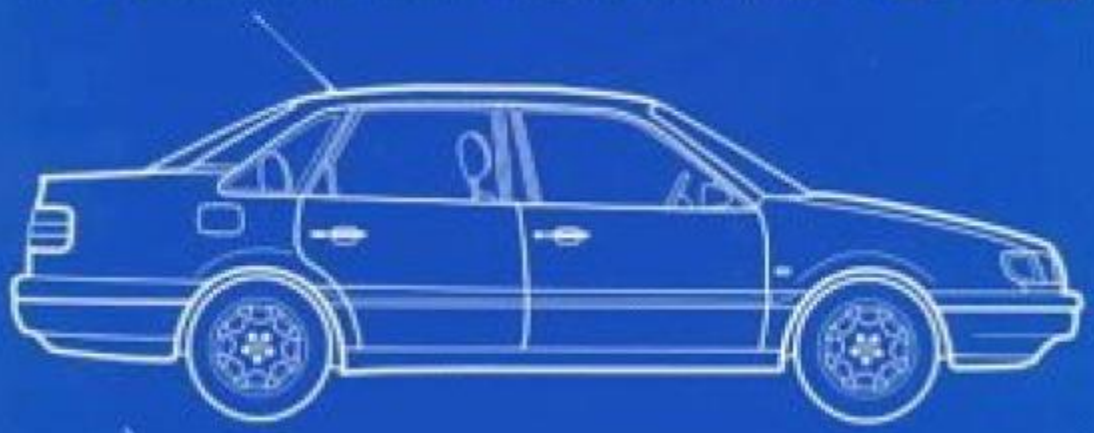

Robert Bentley

PASSAT '95 - '97

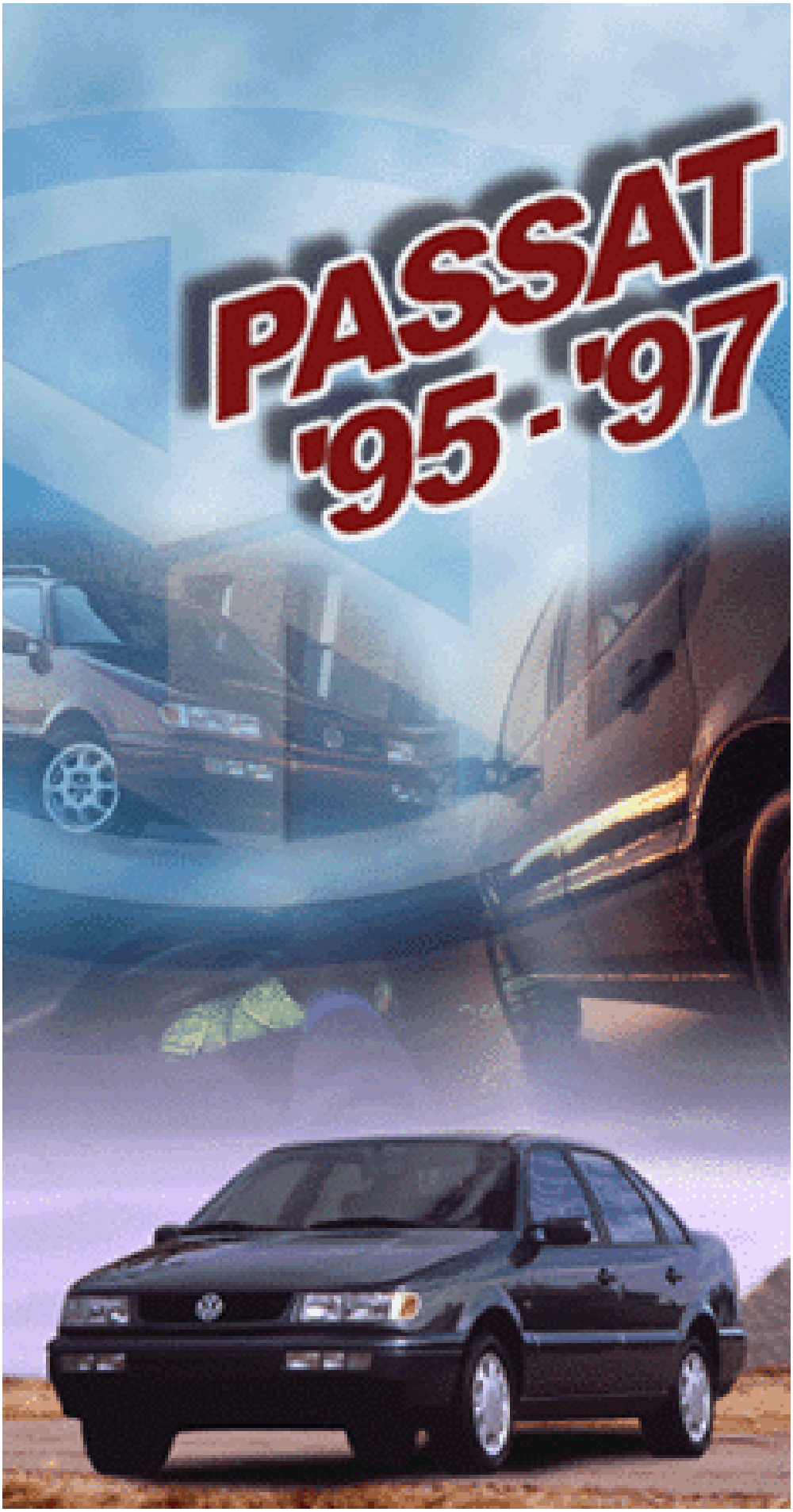

Brake System On Board Diagnostic (OBD)

01 - On Board Diagnostic (OBD)

Teves 04 Anti-lock Brakes (ABS) and Anti-lock Brakes with Electronic Differential Lock (ABS/EDL), On Board Diagnostic (OBD)
ABS and ABS/EDL, Teves 04, distinguishing features
Function
On Board Diagnostic (OBD), technical data
Safety precautions and fundamental points regarding troubleshooting
Troubleshooting with VAG 1551 scan tool

Teves 04 ABS and ABS/EDL electrical/electronic component locations

Teves 04 ABS and ABS/EDL On Board Diagnostic (OBD)
Test requirements
VAG 1551 scan tool, connecting and selecting function
List of selectable scan tool functions
Diagnostic Trouble Code (DTC) memory, checking
Diagnostic Trouble Code (DTC) table
Diagnostic Trouble Code (DTC) memory, erasing and ending output

Teves 04 ABS and ABS/EDL electrical test
Test requirements
Multi-pin connectors, terminal assignment
Electrical test table
ABS control module, removing and installing
Brake light switch, adjusting

Teves 20 GI Anti-lock Brakes (ABS) and Anti-lock Brakes with Electronic Differential Lock (ABS/EDL), On Board Diagnostic (OBD)
ABS and ABS/EDL, Teves 20 GI, distinguishing features
Function
On Board Diagnostic (OBD), technical data
Safety precautions and fundamental points regarding troubleshooting
Troubleshooting with VAG 1551 scan tool

Teves 20 GI ABS and ABS/EDL electrical/electronic component locations

Teves 20 GI ABS and ABS/EDL warning lights, malfunctions displayed
Vehicle with ABS/EDL has no EDL function

Teves 20 GI ABS and ABS/EDL On Board Diagnostic (OBD)
Test requirements
List of selectable functions
VAG 1551 scan tool, connecting and selecting function
Diagnostic Trouble Code (DTC) memory, checking
Diagnostic Trouble Code (DTC) table
Diagnostic Trouble Code (DTC) memory, erasing and ending output
Code Control Module ((VAG 1551 function 07)
Read Measuring Value Block ((VAG 1551 scan tool function 08)
Output Diagnostic Test Mode (DTM) ((VAG 1551 scan tool function 03)
Basic Setting ((VAG 1551 scan tool function 04)

Teves 20 GI ABS and ABS/EDL electrical test
Test requirements
Multi-pin connector terminal assignments
Electrical test table
ABS control module, removing and installing
Brake light switch, adjusting

Teves 04 Anti-lock Brakes (ABS) and Anti-lock Brakes with Electronic Differential Lock (ABS/EDL), On Board Diagnostic (OBD)

ABS and ABS/EDL, Teves 04, distinguishing features

ABS - Teves 04

With vacuum brake servo assistance

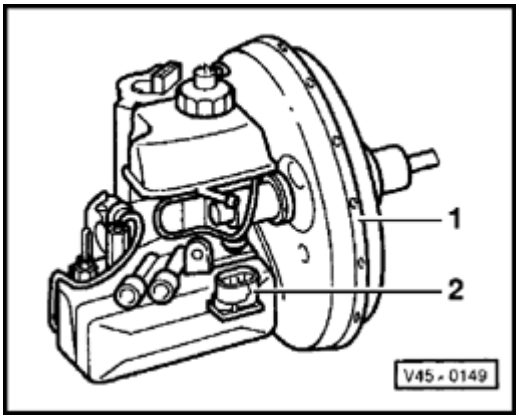

Distinguishing features:

- 10" brake servo -1-
- 10 pins used on 15-pin valve block connector -2- (visible when disconnected)

01-2

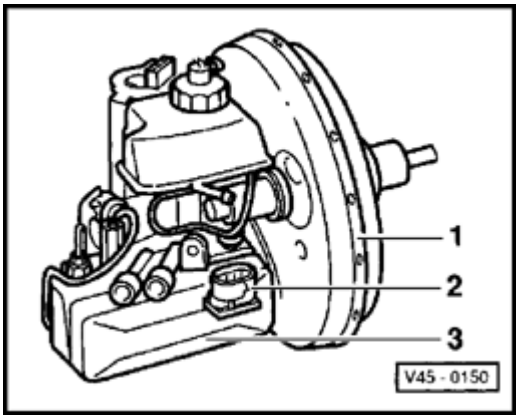

ABS/EDL - Teves 04

With vacuum brake servo assistance

Distinguishing features:

- 10" brake servo -1-
- 14 pins used on 15-pin valve block connector -2- (visible when disconnected)
- Longer valve block -3- for ABS/EDL than for ABS alone
- Series resistor for EDL

Function

Teves 04

The ABS control module -J104- is equipped with Diagnostic Trouble Code (DTC) memory and On Board Diagnostic (OBD) capability. The ABS control module is located under the rear seat, left side. The on board diagnostic Data Link Connectors (DLC) are located under a cover on the right below instrument cluster.

The term "On Board Diagnostic (OBD)" refers to the electrical and electronic parts of ABS or ABS/EDL; in other words, only malfunctions related to the electrical connections to the ABS control module are recognized (e.g. inlet or outlet valve open circuit).

The control module recognizes malfunctions during ABS or ABS/EDL operation and stores them in permanent memory, the contents of which can be recalled years later even if battery power has been disconnected.

Isolated malfunctions that occur sporadically are also recognized and stored but, in contrast to other systems with On Board Diagnostic (OBD) capability, these are stored without the addendum "SP" (sporadic) in the scan tool display.

01-4

Malfunctions are stored with differing priorities: solenoid valve malfunctions have the highest priority, while sporadic malfunctions have the lowest priority.

After switching the ignition on, the ABS warning light -K47- lights up for approx. 2 seconds.

During this period a self-test sequence is carried out by the ABS control module with checks of the following functions:

- Hydraulic pump run at low speed
- Brief valve activation after switching the ignition on

If an ABS malfunction is stored, ABS is switched off and the ABS warning light -K47- remains on.

If an EDL malfunction is stored, the EDL system is switched off. These malfunctions are not indicated by the ABS warning light -K47-.

If ABS or ABS/EDL is switched off because a malfunction has been stored, the conventional hydraulic brake system remains fully operational.

The On Board Diagnostic (OBD) program must be initiated at the start of the troubleshooting process by checking for stored malfunction information using the VAG 1551 scan tool.

VAG 1551 scan tool

The Diagnostic Trouble Code (DTC) information displayed by the scan tool is used in conjunction with a DTC table, which lists possible causes of the malfunction and suggested repairs.

The OBD troubleshooting and repair procedures for ABS and ABS/EDL are identical. Both systems have control modules equipped with 55 pins. The On Board Diagnostic (OBD) operates in the rapid data transfer mode.

With the exception of the additional terminals assigned to the electronic differential lock system, the terminal assignments for the ABS control module -J104- 55-pin connector are identical for both systems.

ABS only

When performing the electrical test, carry out all test steps not marked EDL.

ABS/EDL

When performing the electrical test, carry out all test steps.

On Board Diagnostic (OBD), technical data

Note:

The distinguishing features of ABS and ABS/EDL are:

- *Additional electronic differential lock series resistance -N159- on ABS/EDL hydraulic unit*
- *Longer valve block for ABS/EDL than for ABS alone*

ABS control module-Teves 04

When checking DTC memory, ABS control module identification will be displayed on the VAG 1551 scan tool. Example:

- 1H0 907 379 ABS
- 1H0 907 379 A[1)] ABS/EDL
- 1H0 907 379 E[2)] ABS/EDL

[1)] For this control module the pressure control switch must be installed

[2)] For this control module the pressure control switch is not necessary for the function of the ABS/EDL

For specific applications ⇒ Parts catalog

Diagnostic Trouble Code (DTC) memory

- Permanent memory (DTC memory); contents remain stored even without battery positive voltage (B+) supply
- Access to data by "Rapid data transfer" operating mode 1.

Safety precautions and fundamental points regarding troubleshooting

- ABS is a vehicle safety system; appropriate knowledge is necessary to work on the system.
- Do not drive with the harness connector disconnected from the ABS control module -J104-.
- In order to check complaints and to be able to carry out pin-pointed troubleshooting, DTC memory must be checked before starting work on the ABS or ABS/EDL system.
- Do not disconnect or re-connect harness connectors when the ignition is switched on.
- Observe the appropriate instructions regarding the handling of brake fluid

⇒ *Repair Manual, Suspension, Wheels, Brakes, Steering, Repair Group 47* .

- ABS malfunctions are indicated by the ABS warning light coming on; certain malfunctions will not be recognized at speeds below 40 km/h (24 mph); carry out a road test.
- If the ABS warning light -K47- does not light up, but the brake system is not functioning correctly, then the malfunction must be diagnosed in the conventional braking system (e.g. leaks in the brake hydraulic system).

Necessary technical information

- Repair Manual Electrical Wiring Diagrams, Troubleshooting Component Locations
- Repair Manual, Suspension, Wheels, Brakes, Steering, Repair Group 45

01-9

Troubleshooting with VAG 1551 scan tool

Teves 04

Note:

The term On Board Diagnostic (OBD) refers to the electrical and electronic parts of ABS this means that predominantly only ABS control module electrical and wiring malfunctions will be detected.

Start

Connect → → → → 1 - Rapid data transfer

VAG 1551

scan tool

↓

03 - Brake Electronics

↓

02 - Check DTC Memory → → → →

↓ ↓

Malfunction stored Control module

in DTC memory does not answer

↓ ↓ ↓

No Yes ↓

↓ ↓ ↓

1. Carry out test drive over 40 km/h (24 mph). Print out list of malfunctions ↓
2. Check DTC memory again. ↓ ↓
3. If still no DTC recognized. 06 - End Output ↓

↓ ↓ ↓

A **B** **C**

↓ ↓ ↓

01-10

↓	↓	↓
A	**B**	**C**
↓	↓	↓
Carry out complete ...	Carry out recommended test steps of ...	Carry out test steps 1-4, 42 and 43

Electrical test(s)

↓	↓	↓
↓	↓	↓

Further repair sequence:

- Again check and erase DTC memory with VAG 1551 scan tool.

- Carry out test drive with ABS controlled braking over 40 km/h (25 mph).

- After test drive, check DTC memory again. If, after successful repairs and test drive, "No DTC recognized" appears in the display on the VAG 1551 scan tool, the On Board Diagnostic (OBD) program is concluded.

↓

End

01-11

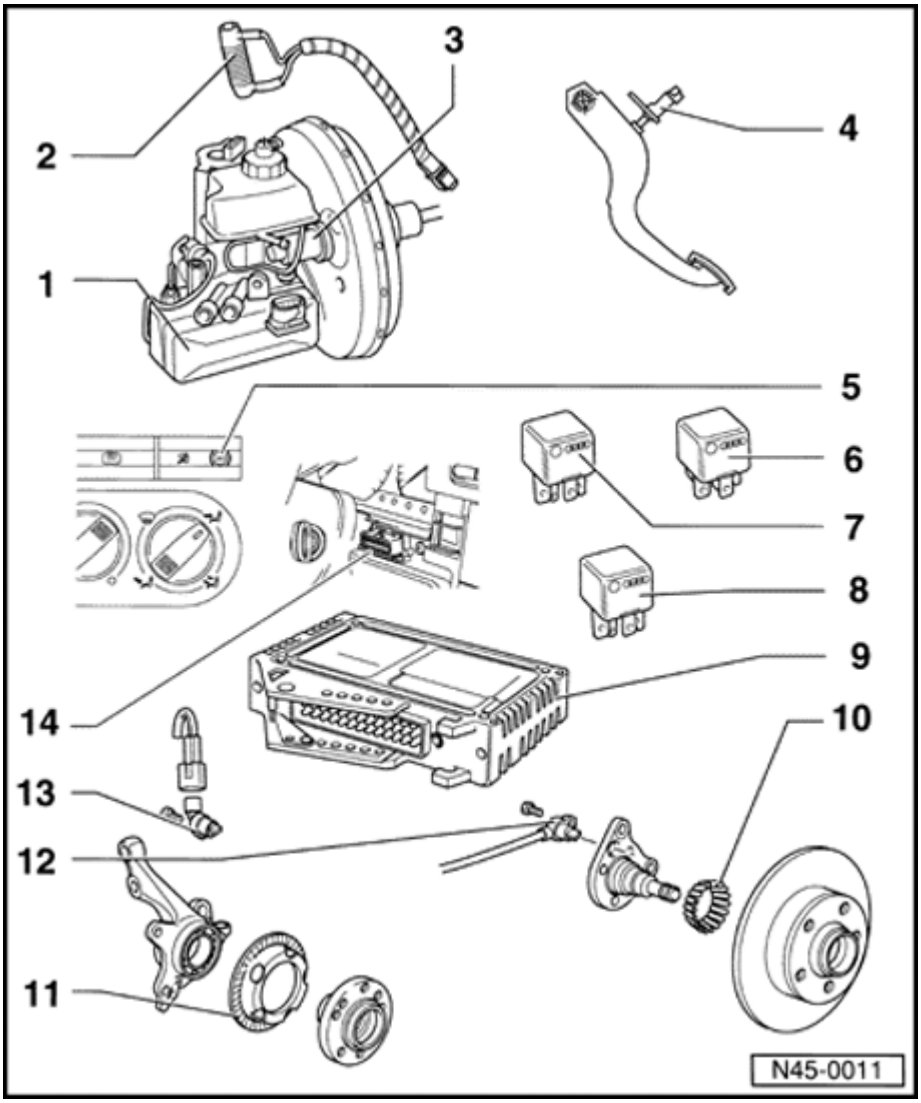

Teves 04 ABS and ABS/EDL electrical/electronic component locations

All components marked with an asterisk (*) are monitored by On Board Diagnostic (OBD).

1 - ABS hydraulic unit - N55-

The hydraulic unit consists of the following components:

- ABS hydraulic pump - V64-* with hydraulic pump sender -G101-*
- Valve block with inlet and outlet valves and, for ABS/EDL, valves for differential lock and pressure control switch (deleted from 07.93)
- EDL series resistance -N159-* (only for ABS/EDL)
- ABS hydraulic pump - V64- and valve block must not be separated from one another

⇒ *Repair Manual, Suspension, Wheels, Brakes, Steering, Repair Group 45*

- When changing the ABS hydraulic unit always seal the old part with plugs from repair kit, Part No. 1H0 698 311
- ABS hydraulic unit multi-pin connectors ⇒

page 01-41

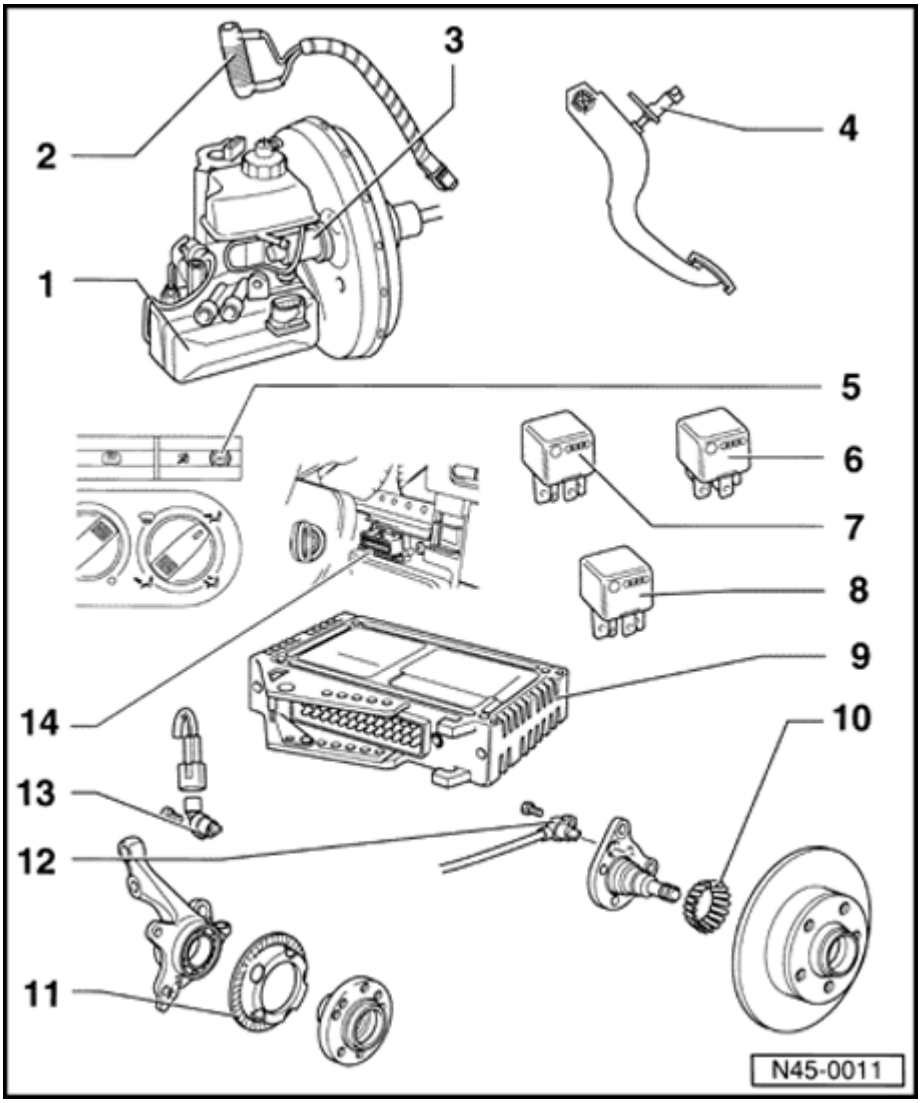

2 - Electronic differential lock series resistance - N159-*

- Location: on ABS hydraulic unit -N55-

3 - Brake pedal position sensor -G100-*

4 - Brake light switch -F-*

- Open in the rest position; adjusting ⇒ page 01-74

5 - ABS warning light - K47-

- Location: instrument panel
- Function: lights for a few seconds after switching ignition on; remains on if one or more malfunctions are recognized

6 - ABS relay - 102-

- Location: Above relay panel

7 - ABS hydraulic pump relay - 185-

- Location: above relay panel

8 - Electronic differential lock relay - 310-*

- Location: above relay panel

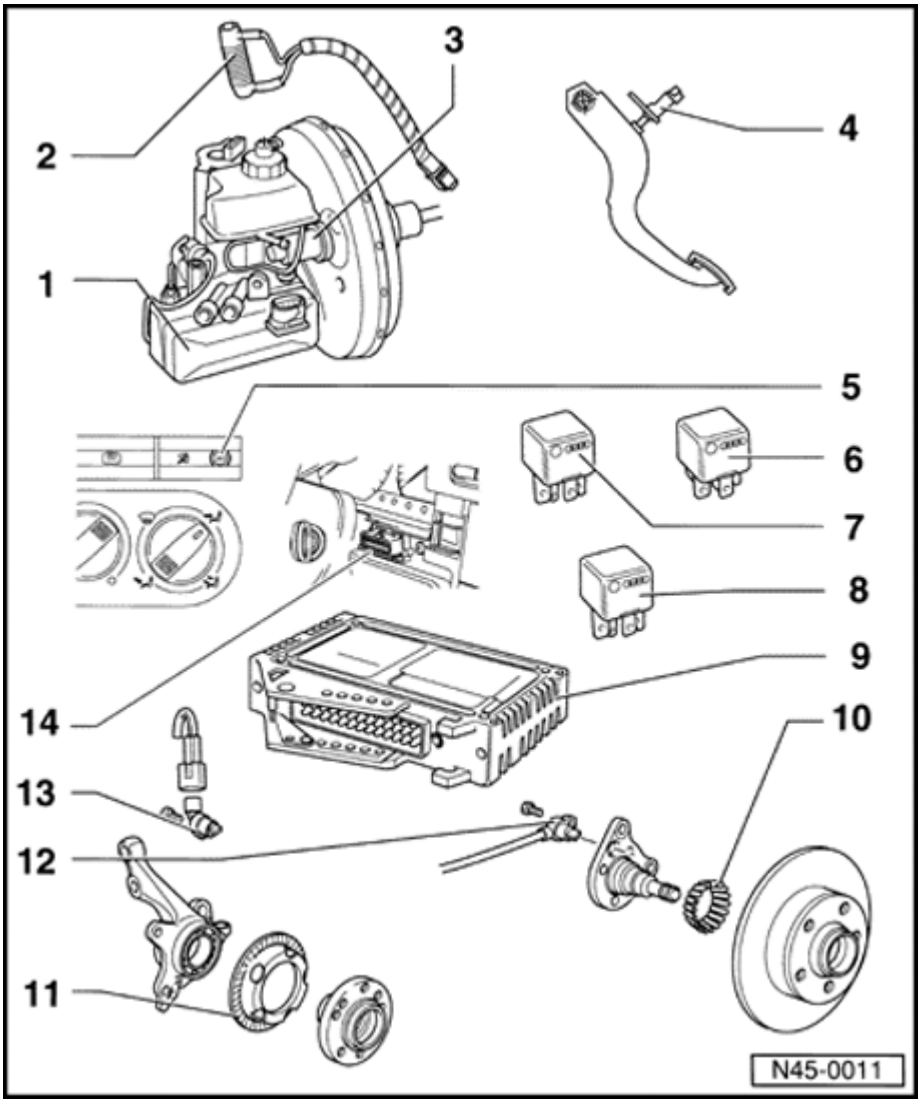

9 - ABS control module - 104-*

- Location: under rear seat, left side
- Checking the multi-pin connector to the ABS control module ⇒ page 01-39
- Switch ignition off before disconnecting
- Do not disconnect before successfully checking DTC memory

10 - Impulse rotor

- For left-rear and right-rear ABS wheel speed sensors

⇒ *Repair Manual, Suspension, Wheels, Brakes, Steering, Repair Group 42*

11 - Impulse rotor

- For left-front and right-front ABS wheel speed sensors

⇒ *Repair Manual, Suspension, Wheels, Brakes, Steering, Repair Group 40*

12 - Left-rear/right-rear ABS wheel speed sensor - G44-*/-G46-*

- Sensor installation instructions item

01-14

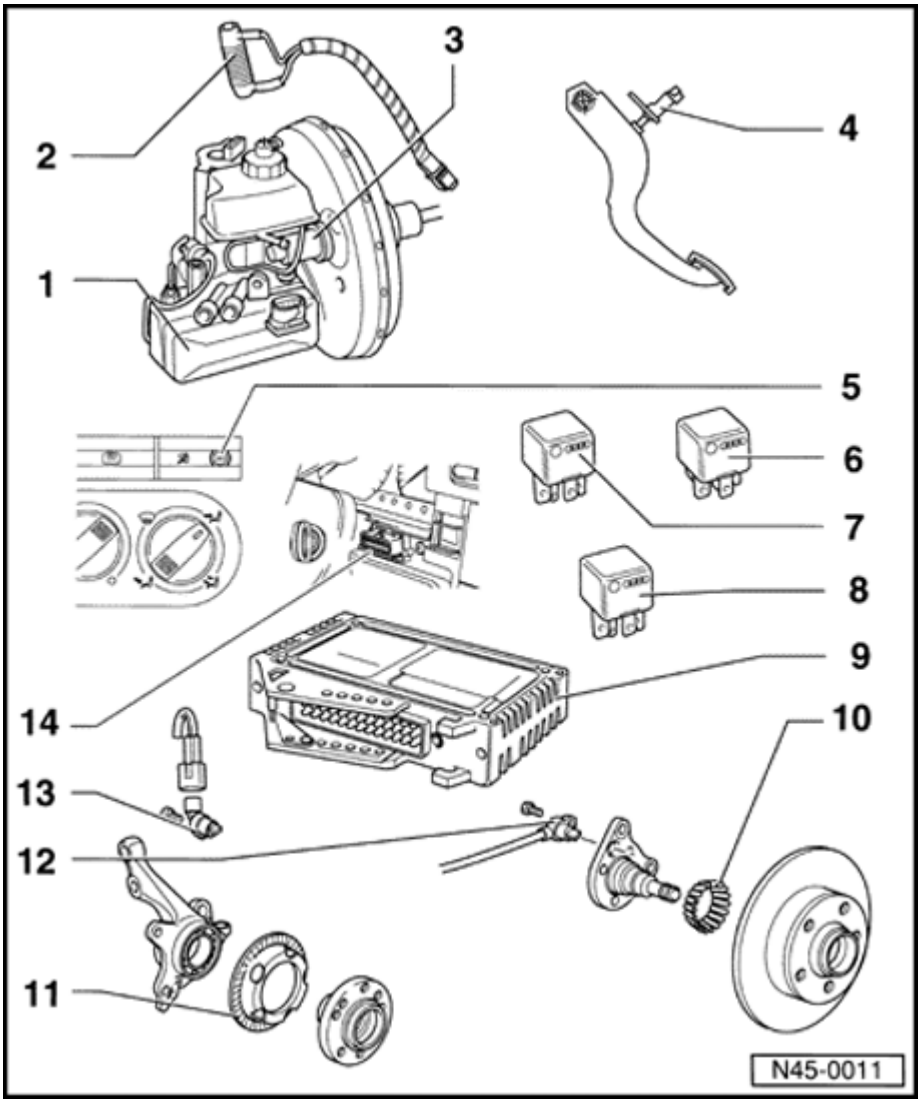

13 - Left-front/right-front ABS wheel speed sensor -G45-*/-G47-*

- Before inserting the sensor clean the inner surface of the sensor mounting and coat with lubricating paste G 000 650
- When connecting the ABS wheel speed sensor wire, make sure it is not twisted in the wheelhousing
- Mounting bolt tightening torque: 10 Nm (7 ft lb)

14 - Data Link Connectors (DLC)

- Location: on right below the instrument cluster

Teves 04 ABS and ABS/EDL On Board Diagnostic (OBD)

Test requirements

- Tires mounted to all four wheels must be of the same (approved) size, inflated to correct pressure
- Conventional brake system OK, including brake light switch and brake lights
- Brake hydraulic lines and connections not leaking (visual check of ABS hydraulic unit, brake calipers)
- Wheel bearings and wheel bearing play OK
- Connector on ABS control module -J104- correctly attached (retainer is engaged)
- Check terminals and sockets on ABS or ABS/EDL components for damage and correct seating.
- ABS relay -J102-, ABS hydraulic pump relay -J185- and electronic differential lock relay -J310- correctly installed/connected

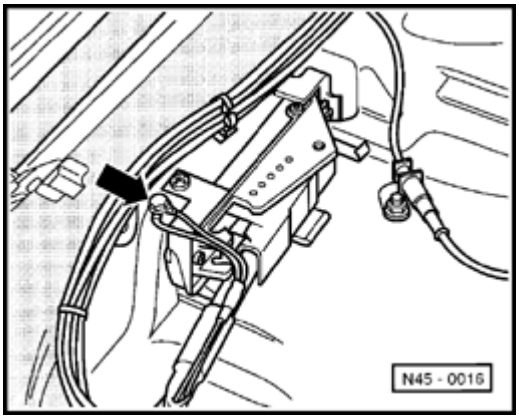

- ABS control module -J104- Ground (GND) connection OK, under rear seat near control module.
- All fuses OK according to wiring diagram (remove fuse from fuse holder to check).
- Supply voltage OK (at least 10.5 V).

01-16

VAG 1551 scan tool, connecting and selecting function

- Test prerequisites ⇒ ⇒ Page 01-15 .

Note:

- *The ABS function is switched off in the ABS control module during the On Board Diagnostic (OBD) program.*
- *DTC memory can only be erased after successful checking and repair.*

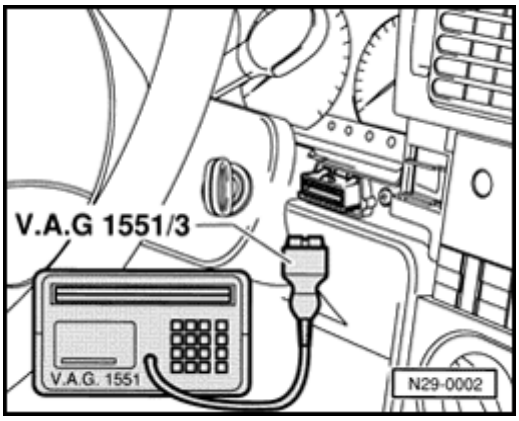

- Remove cover for Data Link Connector (DLC) below instrument cluster on right.
- With ignition switched off, connect VAG 1551 scan tool with VAG 1551/3 adapter cable.

01-17

V.A.G. On Board Diagnostic **HELP**

1 - Rapid data transfer

2 - Blink code output

Indicated on display[1)]

[1)] Operating modes 1 and 2 are displayed alternately.

Note:

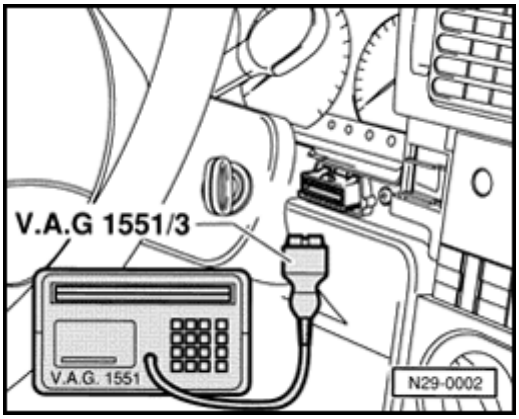

- *If the display remains blank check DLC ⇒ Electrical test, ⇒ Page 01-39 , test step 42*
- *Depending on the program, additional operating information can be printed out by pressing the HELP button on the VAG 1551 scan tool.*
- *The → button is used to advance within the scan tool program sequence.*

- Switch ignition on.
- Press PRINT button to switch on printer (indicator lamp in button lights up).
- Press button -1- to select "Rapid data transfer" operating mode 1.

Rapid data transfer **HELP**

Insert address word

Indicated on display

- Press buttons -0- and -3- to insert "Brake Electronics" address word 03.

Rapid data transfer

03 - Brake Electronics

Indicated on display

- Press -Q- button to confirm input.

01-18

1H0 907 379 A ABS EDL Teves 04 ⮜ ABS control module identification (example) is displayed

ABS control module applications ⇒ Parts catalog.

Note:

Rapid data transfer HELP
Control module does not answer ⮜ *If any other message appears in the display, the possible causes of t malfunction can be printed out by pressing the HELP button.*

Rapid data transfer HELP
K wire not switching to B ⮜ The ignition must be switched on!

Rapid data transfer →
No signal from control module ⮜ Malfunctions have occurred at the start or during the scan tool progra (external interference)

Rapid data transfer →
Error in communication link

- Check VAG 1551/1 or VAG 1551/3 adapter harness.
- Also check for battery positive voltage (B+) supply and check for proper Ground (GND) connection near ABS control module -J104- ⇒Electrical test, ⇒ page 01-39 , test steps 42 and 43.

01-19

- After repairing possible causes of malfunction, again insert "Brake electronics" address word 03 and press -Q- button to confirm input.

Rapid data transfer
Scan tool sends address word 03

Indicated on display after inserting the address word 03.

1H0 907 379 A ABS EDL Teves 04

ABS control module identification (example) is displayed.

- Press → button.

Rapid data transfer HELP
Select function

Indicated on display

List of selectable scan tool functions

Function		Page
01	Check Control Module Version ⇒ page 01-91 VAG 1551 scan tool, connecting and selecting function	⇒ Page 01-16
02	Check DTC Memory	⇒ Page 01-21
05	Erase DTC Memory	⇒ Page 01-37
06	End Output	⇒ Page 01-37

Note:

Currently only the functions listed are available to be used during the On Board Diagnostic (OBD) program.

01-21

Diagnostic Trouble Code (DTC) memory, checking

Rapid data transfer **Select function**	**HELP**	⮜	Indicated on display - Press buttons -0- and -2- to select the "Check DTC Memory" function 02.
Rapid data transfer **02 - Check DTC Memory**		⮜	Indicated on display - Press -Q- button to confirm input.
DTC recognized	→	⮜	The number of stored diagnostic trouble codes (DTCs) will be indicated, or "No DTC recognized" will be displayed
No DTC recognized	→	⮜	- Press → button. The stored DTCs will be displayed and printed out one after the other in sequence. - In Diagnostic Trouble Code (DTC) table, look up DTCs that are printed out ⇒ page 01-23 . - Press → button. As with "No DTC recognized" scan tool returns to start of program sequence after pressing → button.

01-22

Rapid data transfer **Select function**	**HELP**	<	Indicated on display - Press buttons -0- and -6- to select "End Output" function 06 ⇒ page 01-37 . - Switch ignition off and disconnect Data Link Connectors (DLC). ***Note:*** *If a malfunction was recognized:* *1. Repair malfunction* *2. Check DTC memory (function 02)* *3. Erase DTC memory (function 05)* *If the ABS warning light - 47- lights up although there is no malfunction stored in DTC memory, first check the battery positive voltage (B) supply ⇒ Electrical test, page 01-39 , test steps 1 through 4.*

01-23

Diagnostic Trouble Code (DTC) table

Notes on DTC table:

- *All the possible malfunctions that can be recognized by the ABS control module -J104- and printed out on the VAG 1551 scan tool are listed on the following pages according to the 5-digit Diagnostic Trouble Code (DTC).*
- *Diagnostic Trouble Codes (DTC) and blink codes appear only on the print-out (in Rapid data transfer mode).*

Example:

Diagnostic Trouble Code (DTC)

5 digit

00277

- *In addition, the type of malfunction may also appear in the Diagnostic Trouble Code (DTC) table.*
- *Reference is made to individual test steps of the electrical test in the Repairing malfunction column.*
- *Before replacing components indicated as being faulty, check all appropriate wiring, harness connectors and Ground (GND) connections according to the wiring diagram.*
- *After repairs, always check and erase DTC memory again using the VAG 1551 scan tool, also carry out a road test during which the vehicle exceeds a speed of 40 km/h (24 mph).*
- *Repeat the On Board Diagnostic (OBD) procedure after the road test.*

Diagnostic Trouble Code (DTC) table

VAG 1551 scan tool printout	Possible cause of malfunction	Repairing malfunction
00000 No DTC recognized	If "No DTC recognized" is displayed after carrying out repairs, On Board Diagnostic (OBD) program sequence has ended. If, despite "No DTC recognized" being displayed, the ABS system does not operate properly, then proceed as follows: 1. Carry out road test exceeding 40 km/h (24 mph). 2. Again check DTC memory. If there is still no DTC stored: 3. Troubleshoot without On Board Diagnostic (OBD) and work through the complete electrical test ⇒ page 01-39 .	
00257 ABS Inlet Valve, LF -N101	Faulty wire, connector or valve winding	- Check wiring, connectors and valve winding ⇒ *Test steps 17 and 37*[1)]
00259 ABS Inlet Valve, RF -N99	Faulty wire, connector or valve winding	- Check wiring, connectors and valve winding ⇒ *Test steps 18 and 38*[1)]

[1)] ⇒ Electrical test, page 01-39 .

VAG 1551 scan tool printout	Possible cause of malfunction	Repairing malfunction
00265 ABS Outlet Valve, LF -N102	Faulty wire, connector or valve winding	- Check wiring, connectors and valve winding ⇒ *Test steps 21 and 37*[1)]
00267 ABS Outlet Valve, RF -N100	Faulty wire, connector or valve winding	- Check wiring, connectors and valve winding ⇒ *Test steps 22 and 38*[1)]
00273 ABS Inlet Valve, RR -N133	Faulty wire, connector or valve winding	- Check wiring, connectors and valve winding ⇒ *Test steps 20 and 40*[1)]
00274 ABS Inlet Valve, LR -N134	Faulty wire, connector or valve winding	- Check wiring, connectors and valve winding ⇒ *Test steps 19 and 39*[1)]

1) ⇒ Electrical test, page 01-39 .

VAG 1551 scan tool printout	Possible cause of malfunction	Repairing malfunction
00275 ABS Outlet Valve,RR -N135	Faulty wire, connector or valve winding	- Check wiring, connectors and valve winding ⇒ *Test steps 24 and 40*[1)]
00276 ABS Outlet Valve,LR -N136	Faulty wire, connector or valve winding	- Check wiring, connectors and valve winding ⇒ *Test steps 23 and 39*[1)]
00279 Differential Lock Valve 1-N125	Faulty wire, connector or valve winding	- Check wiring, connectors and valve winding ⇒ *Test steps 25 and 41*[1)]
00280 Differential Lock Valve 2-N126	Faulty wire, connector or valve winding	- Check wiring, connectors and valve winding ⇒ *Test steps 26 and 41*[1)]

1) ⇒ Electrical test, page 01-39 .

VAG 1551 scan tool printout	Possible cause of malfunction	Repairing malfunction
00283		
ABS Wheel Speed Sensor,LF-G47	Open circuit, short circuit or loose connection in: ♦ ABS wheel speed sensor wire ♦ Connector ♦ ABS wheel speed sensor winding	- Check wiring, connectors, ABS wheel speed sensor, Ground (GND) wiring to ABS control module and also capacitor for correct Ground (GND) connection ⇒ *Test steps 7, 11 and 34*[1)]
Mechanical malfunction[2)]	Excessive or insufficient air gap between ABS wheel speed sensor and impulse rotor (signal not OK)	- Check installation of ABS wheel speed sensor and impulse rotor; clean if necessary
Signal outside tolerances[2)]	Impulse rotor and ABS wheel speed sensor dirty or damaged	

1) ⇒ Electrical test, page 01-39 .

2) Type of malfunction.

VAG 1551 scan tool printout	Possible cause of malfunction	Repairing malfunction
00285		
ABS Wheel Speed Sensor,RF-G45	Open circuit, short circuit or loose connection in: ♦ ABS wheel speed sensor wire ♦ Connector ♦ ABS wheel speed sensor winding	- Check wiring, connectors, ABS wheel speed sensor, Ground (GND) wiring to ABS control module and also capacitor for correct Ground (GND) connection ⇒ *Test steps 6, 10 and 33*[1)]
Mechanical malfunction[2)]	Excessive or insufficient air gap between ABS wheel speed sensor and impulse rotor (signal not OK)	- Check installation of ABS wheel speed sensor and impulse rotor; clean if necessary
Signal outside tolerances[2)]	Impulse rotor and ABS wheel speed sensor dirty or damaged	

1) ⇒ Electrical test, page 01-39 .

2) Type of malfunction.

VAG 1551 scan tool printout	Possible cause of malfunction	Repairing malfunction
00287		
ABS Wheel Speed Sensor,RR-G44	Open circuit, short circuit or loose connection in: ♦ ABS wheel speed sensor wire ♦ Connector ♦ ABS wheel speed sensor winding	- Check wiring, connectors, ABS wheel speed sensor, Ground (GND) wiring to ABS control module and also capacitor for correct Ground (GND) connection ⇒ *Test steps 8, 12 and 31*[1)]
Mechanical malfunction[2)]	Excessive or insufficient air gap between ABS wheel speed sensor and impulse rotor (signal not OK)	- Check installation of ABS wheel speed sensor and impulse rotor; clean if necessary
Signal outside tolerances[2)]	Impulse rotor and ABS wheel speed sensor dirty or damaged	

1) ⇒ Electrical test, page 01-39 .

2) Type of malfunction.

VAG 1551 scan tool printout	Possible cause of malfunction	Repairing malfunction
00290		
ABS Wheel Speed Sensor,LR-G46	Open circuit, short circuit or loose connection in: ♦ ABS wheel speed sensor wire ♦ Connector ♦ ABS wheel speed sensor winding	- Check wiring, connectors, ABS wheel speed sensor, Ground (GND) wiring to ABS control module and also capacitor for correct Ground (GND) connection ⇒ *Test steps 9, 13 and 32*[1)]
Mechanical malfunction[2)]	Excessive or insufficient air gap between ABS wheel speed sensor and impulse rotor (signal not OK)	- Check installation of ABS wheel speed sensor and impulse rotor; clean if necessary
Signal outside tolerances[2)]	Impulse rotor and ABS wheel speed sensor dirty or damaged	

1) ⇒ Electrical test, page 01-39 .

2) Type of malfunction.

VAG 1551 scan tool printout	Possible cause of malfunction	Repairing malfunction
00292		
Hydraulic Energy Supply Pressure Level	Pressure loss through leaks or air in the hydraulic unit and brake system	- Bleed brake system ⇒ *Repair Manual, Suspension, Wheels, Brakes, Steering, Repair Group 47* - Check wiring and connections for ABS inlet valves and ABS outlet valves ⇒ *Test steps 17-24* [1]
Mechanical malfunction[2]	ABS hydraulic pump -V64- not producing sufficient pressure	- If necessary, replace ABS hydraulic unit and tandem master cylinder ⇒ *Repair Manual, Suspension, Wheels, Brakes, Steering, Repair Group 45* - After repairs, erase DTC memory with VAG 1551 scan tool ⇒ page 01-37
00532		
Supply Voltage (B+)	Faulty wiring, connectors, fuse -S22-, ABS valves fuse -S54- or ABS relay -J102-	- Check fuses, wiring, connectors, Ground (GND) wiring and the voltage supply to ABS control module ⇒ *Test steps 1-4, 14 and 30* [1]

[1] ⇒ Electrical test, page 01-39 .

[2] Type of malfunction.

VAG 1551 scan tool printout	Possible cause of malfunction	Repairing malfunction
00547 ABS Pressure Control Switch-F137[2)]	Wire between terminal 13 and terminal 26 of ABS control module -J104- with ABS pressure control switch -F137- has connection to battery (+) or battery (-)	- Visual check of wiring between terminal 13 and terminal 26 ⇒ Electrical Wiring Diagrams, Troubleshooting Component Locations - Disconnect multi-pin connector from ABS control module, connect to test box VAG 1598 and VAG 1598/10 and use multimeter (Fluke 83 or equivalent) to measure voltage between terminals: 13 and 1 = max. 0.1 V 26 and 1 = max. 0.1 V ⇒ *Test step 29*[1)]

1) ⇒ Electrical test, page 01-39 .

2) Applies to ABS control module 1H0 907 379A only.

VAG 1551 scan tool printout	Possible cause of malfunction	Repairing malfunction
00599 Plausibility Pressure/ Brake Light Switch[2)]	Faulty wiring, connectors, ABS pressure control switch -F137-, fuse -S16- or brake light switch -F- Time delay between brake light switch signal and pressure control switch signal excessive	- Visual check of wire routing from brake light switch -F-, ABS pressure control switch -F137- and fuse -S16- ⇒ *Test steps 5 and 29*[1)] - Ensure that the brake light switch signal enters the ABS control module before the pressure control switch signal, if necessary adjust brake light switch ⇒ page 01-74

1) ⇒ Electrical test, page 01-39 .

2) Applies to ABS control module 1H0 907 379A only.

VAG 1551 scan tool printout	Possible cause of malfunction	Repairing malfunction
00634 Series Resistance - N159	Faulty wiring, connectors, EDL relay -J310- or EDL series resistance -N159-	- Check wiring, connectors, EDL relay -J310- and EDL series resistance -N159- ⇒ *Test steps 15, 35 and 36*[1)] - Check EDL series resistance -N159- for continuity (using VW 1594 connector test kit and multimeter (Fluke 83 or equivalent) in 200 ohm resistance range); Specification: max. 2 Ω, replace if necessary

1) ⇒ Electrical test, page 01-39 .

VAG 1551 scan tool printout	Possible cause of malfunction	Repairing malfunction
00793 Brake Pedal Pos. Sensor-G100 Mechanical malfunction[2)]	Faulty wiring, connectors, brake pedal position sensor -G100- or short to battery positive (B+) or Ground	- Check wiring, connectors and brake pedal position sensor -G100- ⇒ *Test steps 28*[1)] - Unplug multi-pin connector from ABS control module, connect to test box VAG 1598 with adapter VAG 1598/10 and use multimeter (Fluke 83 or equivalent) to measure voltage between the terminals: 16 and 1 = max. 0.1 V 41 and 1 = max. 0.1 V

1) ⇒ Electrical test, page 01-39 .

2) ⇒ Type of malfunction.

01-36

VAG 1551 scan tool printout	Possible cause of malfunction	Repairing malfunction
01276 ABS Hydraulic Pump-V64 Signal outside tolerances[2)]	Faulty wiring, connectors, ABS hydraulic pump relay -J185-, ABS hydraulic pump -V64- or hydraulic pump sender -G101-	- Check wiring, connectors, ABS hydraulic pump relay -J185-, ABS hydraulic pump -V64- and hydraulic pump sender -G101- ⇒ *Test steps 15, 27, 35 and 36*[1)]
65535 Control Module Malfunctioning	Electrical malfunctions caused by outside interference, poor Ground (GND) connections, poor positive connections to ABS control module -J104- ABS control module faulty	- Check wiring, connectors and Ground (GND) wires to ABS control module and voltage supply ⇒ *Test steps 1-4, 14 and 30*[1)] - Replace ABS control module if necessary

1) ⇒ Electrical test, page 01-39 .

2) ⇒ Type of malfunction.

01-37

Diagnostic Trouble Code (DTC) memory, erasing and ending output

Requirements

- DTC memory has been checked

Erasing DTC memory

No DTC recognized	→	⮜	Indicated on display - Press → button.
Rapid data transfer **Select function**	**HELP**	⮜	Indicated on display (clear for function selection) - Press buttons -0- and -5- to select the "Erase DTC Memory" function 05.
Rapid data transfer **05 - Erase DTC Memory**		⮜	Indicated on display - Press -Q- button to confirm input.
Rapid data transfer **DTC memory is erased**	→	⮜	Indicated on display - Press → button.
Rapid data transfer **Select function**	**HELP**	⮜	Indicated on display (clear for function selection)

01-38

Note:

Attention!

DTC Memory is not interrogated

- *If DTC Memory is not interrogated is displayed, the OBD test sequence is faulty.*
- *Follow the program sequence exactly: first check DTC memory, then erase.*

Ending output

Rapid data transfer **HELP**

Select function

Indicated on display (clear for function selection)

- Press buttons -0- and -6- to select "End Output" function 06.

Rapid data transfer

06 - End Output

Indicated on display

- Press -Q- button to confirm input.

Rapid data transfer **HELP**

Insert address word

Indicated on display

- Switch ignition off.
- Disconnect VAG 1551 scan tool.
- Switch ignition on.
  - ABS warning light -K47- must come on, then go out after approx. 2 seconds.

Teves 04 ABS and ABS/EDL electrical test

Electrical test steps (from ⇒ Page 01-46) are valid when:

On Board Diagnostic (OBD) test program gives no indication of the source of the malfunction:

- Work through complete electrical test.

On Board Diagnostic (OBD) provides direct indication of the source of the malfunction:

- Only carry out the test steps recommended in the Diagnostic Trouble Code (DTC) table (pin-pointed entry).

Note:

Test steps that are necessary only for vehicles with ABS/EDL have an addendum EDL in the Test step column.

01-40

Test requirements

- Fuses -S16-, -S22-, -S53-, -S54- OK.
- ABS control module -J104- Ground (GND) wires OK:

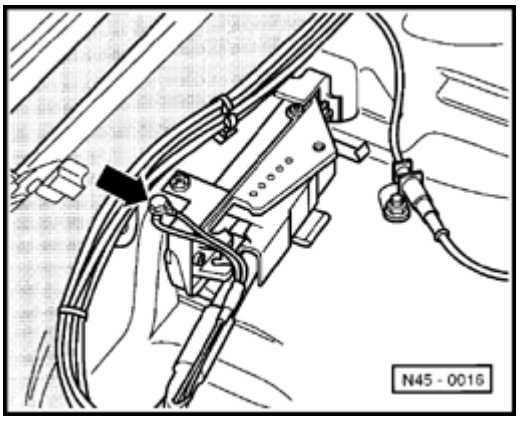

Under rear seat near ABS control module

- Electrical consumers switched-off before beginning test (headlights, lighting, fan, etc.).

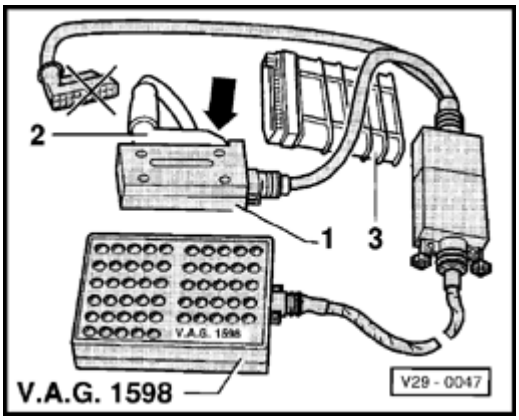

- Disconnect multi-pin harness connector from ABS control module -J104- (⇒ page 01-73) and connect VAG 1598 test box with VAG 1598/10 adapter -1- to harness connector -2-.

CAUTION!

- ***The control module -3- is not connected!***
- ***The specifications listed in the electrical test table are matched to the specified multimeter (Fluke 3 or equivalent) and are not necessarily valid for other test equipment.***

01-41

Multi-pin connectors, terminal assignment

Note:

All terminals not listed are currently not assigned

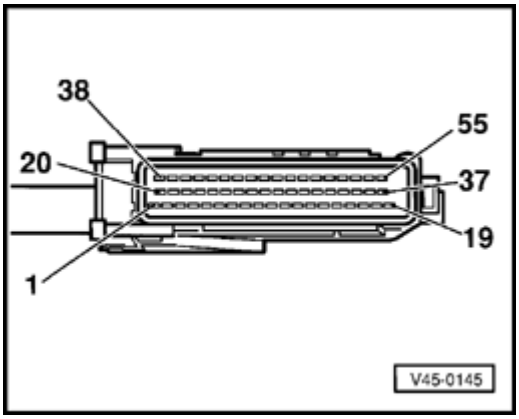

ABS control module harness 55-pin connector -T55-

Terminal	Connected to component ...
1	⇒ Ground (GND) (terminal 31)
2	⇒ Left front ABS outlet valve -N102-
3	⇒ Terminal 30 via ABS relay -J102-
7	⇒ Electronic differential lock cut-off relay -J263-
13	⇒ ABS pressure control switch -F137-[1)]
15	⇒ ABS hydraulic pump relay -J185-
16	⇒ Brake pedal position sensor -G100-
18	⇒ Right rear ABS outlet valve -N135-
19	⇒ Ground (GND) (terminal 31)
20	⇒ Left front ABS outlet valve -N101-
21	⇒ Right front ABS outlet valve -N100-
26	⇒ ABS pressure control switch -F137-[1)]
27	⇒ Right rear ABS wheel speed sensor -G44-

[1)] The wiring at terminals 13 and 26 is required with control module 1H0 907 379A

01-42

Terminal	Connected to component ...
28	⇒ Left rear ABS wheel speed sensor -G46-
29	⇒ Right front ABS wheel speed sensor -G45-
30	⇒ Left front ABS wheel speed sensor -G47-
31	⇒ Hydraulic pump sensor -G101-
32	⇒ Brake light switch -F-
33	⇒ Terminal 30 via ABS relay -J102-
34	⇒ ABS relay -J102-
35	⇒ Battery positive (B+) via ABS valves fuse -S54-
36	⇒ Left rear ABS outlet valve -N136-
37	⇒ Differential lock valve 1 -N125-
38	⇒ Right front ABS inlet valve -N99-
40	⇒ Differential lock valve 2 -N126-
41	⇒ Brake pedal position sensor -G100-
42	⇒ Connector T16/7 (K wire)
45	⇒ Right rear ABS wheel speed sensor -G44-

01-43

Terminal	Connected to component ...
46	⇒ Left rear ABS wheel speed sensor -G46-
47	⇒ Right front ABS wheel speed sensor -G45-
48	⇒ Left front ABS wheel speed sensor -G47-
49	⇒ Hydraulic pump sensor -G101-
52	⇒ ABS warning light -K47-
53	⇒ Terminal 15 via connector T1
54	⇒ Left rear ABS inlet valve -N134-
55	⇒ Right rear ABS inlet valve -N133-

01-44

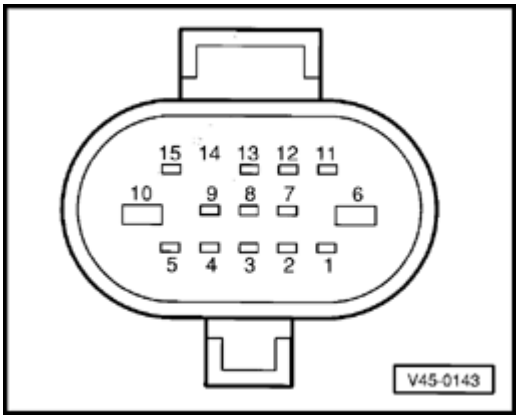

ABS hydraulic unit -N55- harness connector

Terminal	Connected to component ...
1	⇒ To -J104- via T55/36
2	⇒ To -J104- via T55/38
3	⇒ To -J104- via T55/54
4	⇒ To -J104- via T55/2
5	⇒ To -J104- via T55/20
6	⇒ Terminal 30 via -J102-
7	⇒ To -J104- via T55/21
8	⇒ To -J104- via T55/18
9	⇒ To -J104- via T55/55
10	⇒ Terminal 30 via -J102-
11	⇒ To -J104- via T55/37
12	⇒ To -J104- via T55/26[1)]
13	⇒ To -J104- via T55/13[1)]
15	⇒ To -J104- via T55/40

[1)] The wiring at terminals 12 and 13 is required with control module 1H0 907 379A

01-45

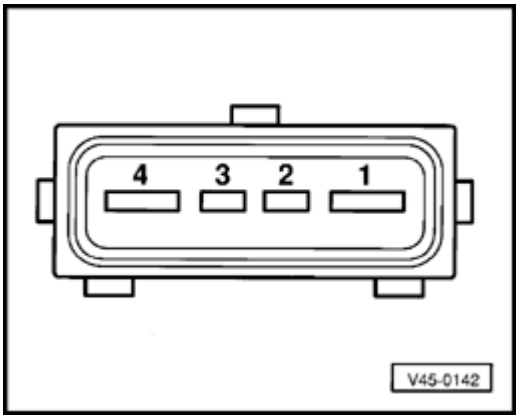

ABS hydraulic pump -V64- harness connector

Terminal	Connected to component ...
1	⇒ Terminal 30 via ABS hydraulic pump relay -J185-
2	⇒ To -J104- via T55/49
3	⇒ To -J104- via T55/31
4	⇒ Ground (GND) (terminal 31)

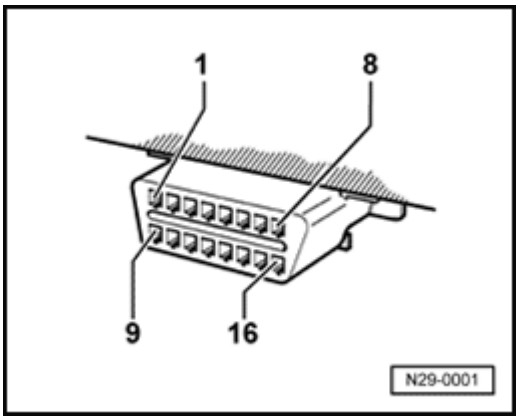

Data link connector (DLC) for voltage supply and On Board Diagnostic (OBD) with the VAG 1551 scan tool

Terminal 4	=	Ground (GND) (terminal 31)
Terminal 16	=	Battery positive voltage (B+) (terminal 30) via -S22-
Terminal 7	=	K wire via junction box TV14 (in center console area), connector T2d/2 to ABS control module -J104- terminal 42

01-46

Electrical test table

Test equipment and aids required:

- Test box VAG 1598 with adapter VAG 1598/10
- VW 1594 connector test kit
- Multimeter (Fluke 83 or equivalent)

Notes on electrical test table

- *The socket number designations on the VAG 1598 test box are identical to the terminal designations on the ABS control module -J104- ⇒ Electrical Wiring Diagrams, Troubleshooting and Component Locations binder.*
- *If the measured values deviate from the specifications, repair the malfunction as described in the right-hand column of the table ⇒Electrical Wiring Diagrams, Troubleshooting & Component Locations*
- *If the measured values deviate only slightly from the specifications, clean sockets and connectors for tester and adapter cables (with contact spray G 000 700 04) and repeat the test.*
- *If the specifications are attained, also check wiring for short circuit to positive and Ground (GND).*
- *Use connector test kit VW1594 for continuity checks (bridging).*
- *Before replacing components, check wiring and connections and also, particularly for specifications of less than 10 Ω, repeat the resistance test on the component.*

01-47

Switch to voltage measuring range - 20 V					
Test step[1)]	**VAG 1598 sockets**	**Test of**	• Test conditions - Additional operations	**Specified value**	**Repairing malfunction**
1 EDL	35 + 1	Voltage supply (terminal 30) at ABS control module - J104-	• Ignition switched off	10.0 - 14.5 V	- Check wire from terminal 1 to Ground (GND) point[2)] - Check wire from terminal 35 via ABS valves fuse - S54- to battery pos. (B+)
2	53 + 1	Voltage supply (terminal 15) at ABS control module - J104-	• Ignition switched off	10.0 - 14.5 V	- Check wire from terminal 1 to Ground (GND) point[2)] - Check wire from terminal 53 to terminal D/7 (relay panel)

1) ⇒ page 01-39 , electrical test.

2) Under rear seat near ABS control module ⇒ page 01-40

Switch to voltage measuring range - 20 V					
Test step[1)]	**VAG 1598 sockets**	**Test of**	• Test conditions - Additional operations	**Specified value**	**Repairing malfunction**
3	33 + 1	♦ Function of ABS relay -J102- ♦ Voltage supply at ABS control module -J104-	• Ignition switched off - Bridge sockets 19 and 34 on VAG 1598 - Switch ignition on: ABS relay -J102- operates - Remove bridge after check	10.0 - 14.5 V ABS warning light -K47- goes out	- Check wire from terminal 1 to Ground (GND) point[2)] - Check wire from terminal 33 via -J102- and -S54- to battery positive (B+) If ABS relay -J102- does not operate, check activation: - Check wire from terminal 34 to -J102- terminal 4 and -J102-

1) ⇒ page 01-39 , electrical test.

2) Under rear seat near ABS control module ⇒ page 01-40

01-49

Switch to voltage measuring range - 20 V					
Test step[1)]	**VAG 1598 sockets**	**Test of**	• Test conditions - Additional operations	**Specified value**	**Repairing malfunction**
4	3 + 1	Function of ABS relay -J102- (Reference voltage)	• Ignition switched off - Bridge sockets 19 and 34 on VAG 1598 - Switch ignition on: ABS relay -J102- operates - Remove bridge after the check	10.0 - 14.5 V ABS warning light -K47- goes out	- Check wire from terminal 3 via -J102- and -S54- to battery positive (B+) If -J102- does not operate, check activation: - Check wire from terminal 34 to -J102- terminal 4 and ABS relay -J102-
5	32 + 1	Function of brake light switch -F-	• Ignition switched off - Depress and hold brake pedal	After operating the brake light switch: 10.0 - 14.5V	- Check fuse -S16- and brake light switch -F- - Check wire from terminal 1 to Ground (GND) point[2)] - Check wire from terminal 32 to terminal W/4 (relay panel)

[1)] ⇒ page 01-39 , electrical test.

[2)] Under rear seat near ABS control module ⇒ page 01-40

01-50

Switch to resistance measuring range - 2 kΩ					
Test step[1)]	**VAG 1598 sockets**	**Test of**	• Test conditions - Additional operations	**Specified value**	**Repairing malfunction**
6	47 + 29	Resistance of right front ABS wheel speed sensor -G45-	• Ignition switched off	1.0 - 1.3 kΩ	- Check connector T2 - Check resistance of speed sensor (1.0 - 1.2 kΩ) - Check wire to speed sensor, move wire while checking (loose connection)
7	48 + 30	Resistance of left front ABS wheel speed sensor -G47-	• Ignition switched off	1.0 - 1.3 kΩ	- Check connector T2 - Check resistance of speed sensor (1.0 - 1.2 kΩ) - Check wire to speed sensor, move wire while checking (loose connection)

1) ⇒ page 01-39 , electrical test.

01-51

Switch to resistance measuring range - 2 kΩ					
Test step[1)]	**VAG 1598 sockets**	**Test of**	• Test conditions - Additional operations	**Specified value**	**Repairing malfunction**
8	45 + 27	Resistance of right rear ABS wheel speed sensor -G44-	• Ignition switched off	1.0 - 1.3 kΩ	- Check connector T2 - Check resistance of speed sensor (1.0 - 1.2 kΩ) - Check wire to speed sensor, move wire while checking (loose connection)
9	46 + 28	Resistance of left rear ABS wheel speed sensor -G46-	• Ignition switched off	1.0 - 1.3 kΩ	- Check connector T2 - Check resistance of speed sensor (1.0 - 1.2 kΩ) - Check wire to speed sensor, move wire while checking (loose connection)

1) ⇒ page 01-39 , electrical test.

Switch to resistance measuring range - 2 MΩ					
Test step[1)]	**VAG 1598 sockets**	**Test of**	• Test conditions - Additional operations	**Specified value**	**Repairing malfunction**
10	1 + 29	Insulation resistance of shielding for right front ABS wheel speed sensor -G45-	• Ignition switched off	Min. 2 MΩ [2)]	- Check shielding for damage (chafing), move wire while checking (loose connection)
11	1 + 30	Insulation resistance of shielding for left front ABS wheel speed sensor -G47-	• Ignition switched off	Min. 2 MΩ [2)]	- Check shielding for damage (chafing), move wire while checking (loose connection)

1) ⇒ page 01-39 , electrical test.

2) Multimeter (Fluke 83 or equivalent) indicating "1" signifies infinite resistance and is OK.

Switch to resistance measuring range - 2 MΩ					
Test step[1)]	**VAG 1598 sockets**	**Test of**	• Test conditions - Additional operations	**Specified value**	**Repairing malfunction**
12	1 + 27	Insulation resistance of shielding for right rear ABS wheel speed sensor -G44-	• Ignition switched off	Min. 2 MΩ [2)]	- Check shielding for damage (chafing), move wire while checking (loose connection)
13	1 + 28	Insulation resistance of shielding for left rear ABS wheel speed sensor -G46-	• Ignition switched off	Min. 2 MΩ [2)]	- Check shielding for damage (chafing), move wire while checking (loose connection)

1) ⇒ page 01-39 , electrical test.

2) If multimeter (Fluke 83 or equivalent) indicates "1", this signifies infinite resistance and is OK.

Switch to resistance measuring range - 200 Ω					
Test step[1)]	**VAG 1598 sockets**	**Test of**	• Test conditions - Additional operations	**Specified value**	**Repairing malfunction**
14	53 + 34	Winding resistance of ABS relay -J102-	• Ignition switched off	50 - 100 Ω	- Check wire from terminal 53 without -J102- to terminal 34 - Check -J102- winding resistance (50 - 100 Ω), replace if necessary
15	15 + 33	Winding resistance of ABS hydraulic pump relay -J185-	• Ignition switched off	50 - 100 Ω	- Check wire from terminal 33 without -J185- to terminal 15 - Check -J185- winding resistance (50 - 100 Ω), replace if necessary
16 EDL	7 + 33	Winding resistance of EDL relay -J310-	• Ignition switched off	50 - 100 Ω	- Check wire from terminal 33 without -J185- to terminal 7 - Check -J310- winding resistance (50 - 100 Ω), replace if necessary

1) ⇒ page 01-39 , electrical test.

Switch to resistance measuring range - 200 Ω					
Test step[1)]	**VAG 1598 sockets**	**Test of**	• Test conditions - Additional operations	**Specified value**	**Repairing malfunction**
17	20 + 3	Resistance of left front ABS inlet valve -N101-	• Ignition switched off	6.5 - 10 Ω	- Check wire from terminal 20 without -N101- to terminal 3 - Check resistance of -N101- (6.5 - 8 Ω), if necessary replace ABS hydraulic unit ⇒ *Repair Manual, Suspension, Wheels, Brakes, Steering, Repair Group 45*
18	38 + 3	Resistance of right front ABS inlet valve -N99-	• Ignition switched off	6.5 - 10 Ω	- Check wire from terminal 38 without -N99- to terminal 3 - Check resistance of -N99- (6.5 - 8 Ω), if necessary replace ABS hydraulic unit ⇒ *Repair Manual, Suspension, Wheels, Brakes, Steering, Repair Group 45*

1) ⇒ page 01-39 , electrical test.

01-56

Switch to resistance measuring range - 200 Ω					
Test step[1)]	**VAG 1598 sockets**	**Test of**	• Test conditions - Additional operations	**Specified value**	**Repairing malfunction**
19	54 + 3	Resistance of left rear ABS inlet valve -N134-	• Ignition switched off	6.5 - 10 Ω	- Check wire from terminal 54 without -N134- to terminal 3 - Check resistance of -N134- (6.5 - 8 Ω), if necessary replace ABS hydraulic unit ⇒ *Repair Manual, Suspension, Wheels, Brakes, Steering, Repair Group 45*
20	55 + 3	Resistance of right rear ABS inlet valve -N133-	• Ignition switched off	6.5 - 10 Ω	- Check wire from terminal 55 without -N133- to terminal 3 - Check resistance of -N133- (6.5 - 8 Ω), if necessary replace ABS hydraulic unit ⇒ *Repair Manual, Suspension, Wheels, Brakes, Steering, Repair Group 45*

1) ⇒ page 01-39 , electrical test.

01-57

Switch to resistance measuring range - 200 Ω					
Test step[1)]	**VAG 1598 sockets**	**Test of**	• Test conditions - Additional operations	**Specified value**	**Repairing malfunction**
21	2 + 3	Resistance of left front ABS outlet valve -N102-	• Ignition switched off	3 - 7 Ω	- Check wire from terminal 2 without -N102- to terminal 3 - Check resistance of -N102- (3 - 5 Ω), if necessary replace ABS hydraulic unit ⇒ *Repair Manual, Suspension, Wheels, Brakes, Steering, Repair Group 45*
22	21 + 3	Resistance of right front ABS outlet valve -N100-	• Ignition switched off	3 - 7 Ω	- Check wire from terminal 21 without -N100- to terminal 3 - Check resistance of -N100- (3 - 5 Ω), if necessary replace ABS hydraulic unit ⇒ *Repair Manual, Suspension, Wheels, Brakes, Steering, Repair Group 45*

1) ⇒ page 01-39 , electrical test.

01-58

Switch to resistance measuring range - 200 Ω					
Test step[1)]	**VAG 1598 sockets**	**Test of**	• Test conditions - Additional operations	**Specified value**	**Repairing malfunction**
23	36 + 3	Resistance of left rear ABS outlet valve -N136-	• Ignition switched off	3 - 7 Ω	- Check wire from terminal 36 without -N136- to terminal 3 - Check resistance of -N136- (3 - 5 Ω), if necessary replace ABS hydraulic unit ⇒ *Repair Manual, Suspension, Wheels, Brakes, Steering, Repair Group 45*
24	18 + 3	Resistance of right rear ABS outlet valve -N135-	• Ignition switched off	3 - 7 Ω	- Check wire from terminal 18 without -N135- to terminal 3 - Check resistance of -N135- (3 - 5 Ω), if necessary replace ABS hydraulic unit ⇒ *Repair Manual, Suspension, Wheels, Brakes, Steering, Repair Group 45*

[1)] ⇒ page 01-39 , electrical test.

Switch to resistance measuring range - 200 Ω					
Test step[1)]	**VAG 1598 sockets**	**Test of**	• Test conditions - Additional operations	**Specified value**	**Repairing malfunction**
25 EDL	37 + 3	Resistance of differential lock valve 1 -N125-	• Ignition switched off	6 - 10 Ω	- Check wire from terminal 37 without -N125- to terminal 3 - Check resistance of -N125- (6 - 8 Ω), if necessary replace ABS hydraulic unit ⇒ *Repair Manual, Suspension, Wheels, Brakes, Steering, Repair Group 45*
26 EDL	40 + 3	Resistance of differential lock valve 2 -N126-	• Ignition switched off	6 - 10 Ω	- Check wire from terminal 40 without -N126- to terminal 3 - Check resistance of -N126- (6 - 8 Ω), if necessary replace ABS hydraulic unit ⇒ *Repair Manual, Suspension, Wheels, Brakes, Steering, Repair Group 45*

[1)] ⇒ page 01-39 , electrical test.

Switch to resistance measuring range - 200 Ω					
Test step[1)]	**VAG 1598 sockets**	**Test of**	• Test conditions - Additional operations	**Specified value**	**Repairing malfunction**
27	31 + 49	Resistance of hydraulic pump sensor -G101-	• Ignition switched off	29 - 40 Ω	- Check wire from terminal 49 without -G101- to terminal 31 - Check resistance of -G101- (29 - 40 Ω), if necessary replace ABS hydraulic unit ⇒ *Repair Manual, Suspension, Wheels, Brakes, Steering, Repair Group 45*

1) ⇒ page 01-39 , electrical test.

Switch to resistance measuring range - 200 Ω					
Test step[1)]	**VAG 1598 sockets**	**Test of**	• Test conditions - Additional operations	**Specified value**	**Repairing malfunction**
28	16 + 41	Resistance of brake pedal position sensor -G100-	• Ignition switched off -G100- has variable resistance. The following resistance values are specified, depending on pedal position as the pedal is depressed from rest:		- Check wire from terminal 16 without -G100- to terminal 41 - Check resistance of -G100- (with adapter cable VW 1594/23), if faulty, replace brake pedal position sensor ⇒ *Repair Manual, Suspension, Wheels, Brakes, Steering, Repair Group 45*
			-Stage 1 (Rest position)	230 - 270 Ω	
			-Stage 2	410 - 460 Ω	
			-Stage 3	540 - 600 Ω	
			-Stage 4	650 - 730 Ω	
			-Stage 5	770 - 860 Ω	
			-Stage 6	980 -1100 Ω	
			-Stage 7	2)	

1) ⇒ page 01-39 , electrical test.

2) Stage 7 is only achieved if a malfunction exists (pressure loss); Specification: min. 2MΩ.

01-62

Switch to resistance measuring range - 200 Ω (Note change to 2 MΩ range during test step 29)					
Test step[1)]	**VAG 1598 sockets**	**Test of**	• Test conditions - Additional operations	**Specified value**	**Repairing malfunction**
29 EDL	13 + 26	Function of ABS pressure control switch -F137-[3)]	• Ignition switched off • Brake pedal not depressed - Select (2 MΩ) measuring range on multimeter (Fluke 83 or equivalent) - Depress brake pedal fully and hold	Min. 1.5 Ω Min. 2 MΩ	- Check wire from terminal 13 without -F137- to terminal 26 - If resistance is not attained, replace ABS hydraulic unit ⇒ *Repair Manual, Suspension, Wheels, Brakes, Steering, Repair Group 45*
30	1 + 3 1 + 33 1 + 19	Resistance of ABS relay -J102- Resistance of Ground (GND) connections	• Ignition switched off	Max. 1.5 Ω	- Check wire from terminal 3 and terminal 33 without -J102- to Ground (GND) - Check wire from terminal 1 and terminal 19 via Ground connections[2)] to battery - (GND)

1) ⇒ page 01-39 , electrical test.

2) Under rear seat near ABS control module ⇒ 01-40

3) Applies to ABS control module 1H0 907 379A only.

Switch to voltage measuring range - 2 V					
Test step[1)]	**VAG 1598 sockets**	**Test of**	• Test conditions - Additional operations	**Specified value**	**Repairing malfunction**
31	45 + 27	Right rear ABS wheel speed sensor -G44- voltage signal	• Vehicle raised • Ignition switched off - Rotate rear right wheel at approx. 1 rev./sec.	Min. 65 mV alternating voltage	- Check connector T2, installation of speed sensor and impulse wheel - Check whether speed sensor has been interchanged
32	46 + 28	Left rear ABS wheel speed sensor -G46- voltage signal	• Vehicle raised • Ignition switched off - Rotate rear left wheel at approx. 1 rev./sec.	Min. 65 mV alternating voltage	- Check connector T2, installation of speed sensor and impulse wheel - Check whether speed sensor has been interchanged

1) ⇒ page 01-39 , electrical test.

Switch to voltage measuring range - 2 V					
Test step[1)]	**VAG 1598 sockets**	**Test of**	• Test conditions - Additional operations	**Specified value**	**Repairing malfunction**
33	47 + 29	Right front ABS wheel speed sensor -G45- voltage signal	• Vehicle raised • Ignition switched off - Rotate front right wheel at approx. 1 rev./sec.	Min. 65 mV alternating voltage	- Check connector T2, installation of speed sensor and impulse wheel - Check whether speed sensor has been interchanged
34	48 + 30	Left front ABS wheel speed sensor -G47- voltage signal	• Vehicle raised • Ignition switched off - Rotate front left wheel at approx. 1 rev./sec.	Min. 65 mV alternating voltage	- Check connector T2, installation of speed sensor and impulse wheel - Check whether speed sensor has been interchanged

1) ⇒ page 01-39 , electrical test.

Functional check: ABS hydraulic pump -V64- *CAUTION!: On no account must the brake pedal be depressed during this check!*					
Test step[1)]	**VAG 1598 sockets**	**Test of**	• Test conditions - Additional operations	**Specified value**	**Repairing malfunction**
35	Bridge: 19 = 34 19 = 15	Function of ABS hydraulic pump -V64-	• Ignition switched off - Switch ignition on for max. 30 sec. - Remove bridge after test	After switching ignition on: ABS hydraulic pump -V64- must run audibly	- Check wire from battery positive (B+) via ABS hydraulic pump fuse -S53-, -J185- and -V64- to battery - (GND) - If no open circuit, replace ABS hydraulic unit ⇒ *Repair Manual, Suspension, Wheels, Brakes, Steering, Repair Group 45*
36 EDL	Bridge: 19 = 34 19 = 7	EDL function of ABS hydraulic pump -V64-	• Ignition switched off - Switch ignition on for max. 30 sec. - Remove bridge after test	After switching ignition on: ABS hydraulic pump -V64- must run audibly	- Check wire from battery positive (B+) via ABS hydraulic pump fuse -S53-, -J310-, -N159- and -V64- to battery - (GND) - If no open circuit, replace ABS hydraulic unit ⇒ *Repair Manual, Suspension, Wheels, Brakes, Steering, Repair Group 45*

1) ⇒ page 01-39 , electrical test.

Functional check: Left front ABS inlet and outlet valves -N101-/-N102-					
Test step[1)]	**VAG 1598 sockets**	**Test of**	• Test conditions - Additional operations	**Specified value**	**Repairing malfunction**
37	Bridge: 19 = 34 19 = 20 19 = 2	Function of left front ABS inlet and outlet valves (-N101-/-N102-)	• Vehicle raised • Ignition switched off		- Check that brake lines are correctly connected ⇒ *Repair Manual, Suspension, Wheels, Brakes, Steering, Repair Group 45*
			- Depress brake pedal and hold	Left front wheel locks	- ABS hydraulic unit faulty; replace ⇒ *Repair Manual, Suspension, Wheels, Brakes, Steering, Repair Group 45*
			- Switch ignition on for max. 30 sec.		
			- Depress brake pedal and hold	Left front wheel must rotate freely; pedal must not give	
			- Remove bridge after check		

1) ⇒ page 01-39 , electrical test.

Functional check: Right front ABS inlet and outlet valves -N99-/-N100-					
Test step[1)]	**VAG 1598 sockets**	**Test of**	• Test conditions - Additional operations	**Specified value**	**Repairing malfunction**
38	Bridge: 19 = 34 19 = 21 19 = 38	Function of right front ABS inlet and outlet valves (-N99-/-N100-)	• Vehicle raised • Ignition switched off		- Check that brake lines are correctly connected ⇒ *Repair Manual, Suspension, Wheels, Brakes, Steering, Repair Group 45*
			- Depress brake pedal and hold	Right front wheel locks	- ABS hydraulic unit faulty, replace ⇒ *Repair Manual, Suspension, Wheels, Brakes, Steering, Repair Group 45*
			- Switch ignition on for max. 30 sec.		
			- Depress brake pedal and hold	Right front wheel must rotate freely; pedal must not give	
			- Remove bridge after check		

1) ⇒ page 01-39 , electrical test.

Functional check: Left rear ABS inlet and outlet valves -N134-/-N136-					
Test step[1)]	**VAG 1598 sockets**	**Test of**	• Test conditions - Additional operations	**Specified value**	**Repairing malfunction**
39	Bridge: 19 = 34 19 = 36 19 = 54	Function of left rear ABS inlet and outlet valves (-N134-/-N136-)	• Vehicle raised • Ignition switched off - Depress brake pedal and hold - Switch ignition on for max. 30 sec. - Depress brake pedal and hold - Remove bridge after check	Left rear wheel locks Left rear wheel must rotate freely; pedal must not give	- Check that brake lines are correctly connected ⇒ *Repair Manual, Suspension, Wheels, Brakes, Steering, Repair Group 45* - ABS hydraulic unit faulty, replace ⇒ *Repair Manual, Suspension, Wheels, Brakes, Steering, Repair Group 45*

[1)] ⇒ page 01-39 , electrical test.

Functional check: Right rear ABS inlet and outlet valves -N133-/-N135-					
Test step[1)]	**VAG 1598 sockets**	**Test of**	• Test conditions - Additional operations	**Specified value**	**Repairing malfunction**
40	Bridge: 19 = 55 19 = 34 19 = 18	Function of rear right ABS inlet and outlet valves (-N133-/-N135-)	• Vehicle raised • Ignition switched off - Operate brake pedal and hold - Switch ignition on for max. 30 sec. - Operate brake pedal and hold - Remove bridge after check	Right rear wheel locks Right rear wheel must rotate freely; pedal must not give	- Check that brake lines are correctly connected ⇒ *Repair Manual, Suspension, Wheels, Brakes, Steering, Repair Group 45* - ABS hydraulic unit faulty, replace ⇒ *Repair Manual, Suspension, Wheels, Brakes, Steering, Repair Group 45*

[1)] ⇒ page 01-39 , electrical test.

Functional check: Differential lock valves 1 2 -N125-/-N126-					
Test step[1)]	**VAG 1598 sockets**	**Test of**	• Test conditions - Additional operations	**Specified value**	**Repairing malfunction**
41 EDL	Bridge: 1 = 7 1 = 34 1 = 40 1 = 37	Functional check of differential lock valves 1, 2 (-N125-, -N126-)	• Vehicle raised - Switch ignition on for max. 30 sec. - Remove bridge after check	It must not be possible to turn front wheels	- ABS hydraulic unit faulty, replace ⇒ *Repair Manual, Suspension, Wheels, Brakes, Steering, Repair Group 45*

[1)] ⇒ page 01-39 , electrical test.

Switch to voltage measuring range 20 V in test step 42 Resistance measuring range (20 Ω) in test step 43					
Test step[1)]	**VAG 1598 sockets**	**Test of**	• Test conditions - Additional operations	**Specified value**	**Repairing malfunction**
42	-	Voltage supply for VAG 1551 scan tool, data link connector T16	- Connect multimeter (Fluke 83/equivalent) to T16 using adapter cables from VW 1594 connector test kit[2)]: ◆ Terminal 4: Ground ◆ Terminal 16: positive (B+)	10.0 - 14.5 V	- Check wire from T16/4 to Ground (GND) - Check wire from T16/16 via -S22- to terminal 30
43	-	Resistance of K wire for OBD data link connector T16, terminal 7	• Ignition switched off - Connect multimeter (Fluke 83/equivalent) to VAG 1598 test box socket 42 and data link connector T16 terminal 7 using adapter cables from VW 1594 connector test kit[2)]	Max. 1.5 Ω	- Check wire from T2d to terminal 42 - Check wire from T16/7 via TV14 to terminal 42

[1)] ⇒ page 01-39 , electrical test.

[2)] ⇒ page 01-45 , terminal assignment of connectors for voltage supply and On Board Diagnostic (OBD) with the VAG 1551 scan tool.

Functional check: ABS warning light -K47-					
Test step[1)]	**VAG 1598 sockets**	**Test of**	• Test conditions - Additional operations	**Specified value**	**Repairing malfunction**
44	-	Function of ABS warning light -K47-	• Ignition switched off		- Check wire from terminal W/2 (relay panel) via ABS relay -J102- (diode) to Ground (GND)
			- Switch ignition on	ABS warning light -K47- lights up	- Check wire from terminal X/8 (relay panel) via -K47- to terminal X/4 (relay panel), -K47- (12 V, 1,2 W) replace if necessary
			- Bridge VAG 1598 test box sockets 1 and 34 (-J102- operates)	ABS warning light -K47- goes out	- Check wire from terminal 52 to terminal W/2 (relay panel)
			- Bridge sockets 1 and 52 on VAG 1598	ABS warning light -K47- lights up	
			- Remove bridge after check		

1) ⇒ page 01-39 , electrical test.

01-73

ABS control module, removing and installing

Location: under rear seat, right side

CAUTION!

Switch ignition off before disconnecting or connecting the ABS control module connector.

Removing:

- Press ABS control module securing clip together and pull out.

- Release connector latch to allow it to be disconnected from ABS control module (fold down retaining clip).

Installing:

Installation is the reverse order of the removal sequence.

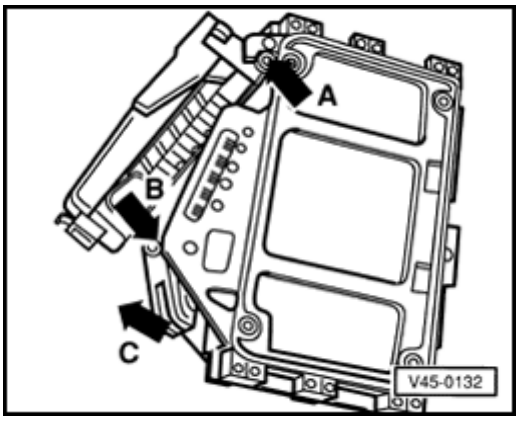

- Place connector retaining lugs into groove on ABS control module (arrow -A-), push connector on (arrow -B-), and fasten with latch (arrow -C-).

Brake light switch, adjusting

Note:

Remove brake light switch to adjust.

- Remove brake light switch by rotating 90° to right.
- Pull brake light switch plunger fully out.
- Press brake pedal down as far as possible by hand.
- Guide brake light switch through assembly opening and reinstall by turning 90° to left.
- Release brake pedal.
- Check function of brake light switch.

Teves 20 GI Anti-lock Brakes (ABS) and Anti-lock Brakes with Electronic Differential Lock (ABS/EDL), On Board Diagnostic (OBD)

ABS and ABS/EDL, Teves 20 GI, distinguishing features

ABS - Teves 20 GI

With vacuum brake servo assistance

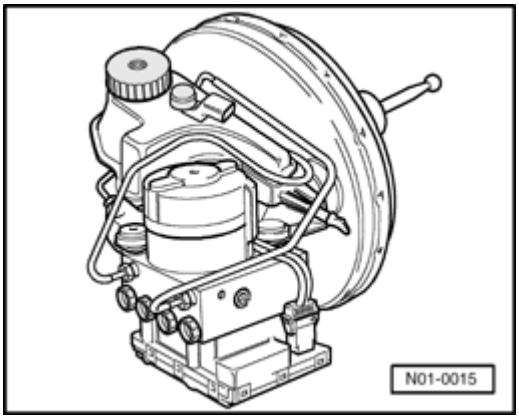

Distinguishing features:

- 10" brake servo
- When using the function check control module version, "3A0 907 379 ABS ITT AE 20 GI" will be displayed on the VAG 1551 scan tool list of selectable functions, ⇒ page 01-90
- 8-valve dome (the protective sleeves for the valves will be visible when the ABS control module is separated from the ABS hydraulic unit)

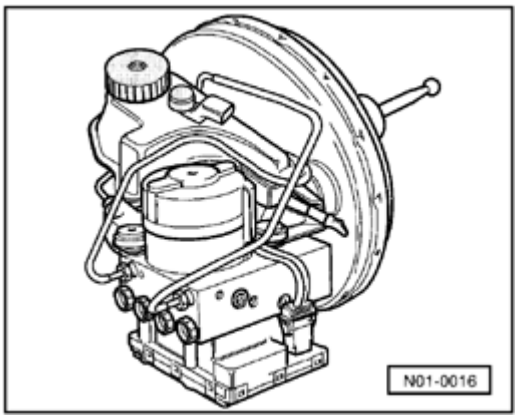

ABS/EDL - Teves 20 GI

With vacuum brake servo assistance

Distinguishing features:

- 10" brake servo -1-
- When using the function check control module version, "3A0 907 379 A ABS/EDS ITT AE 20 GI" will be displayed on the VAG 1551 scan tool ⇒ list of selectable functions, page 01-90
- 10-valve dome (the protective sleeves for the valves will be visible when the ABS control module is separated from the ABS hydraulic unit)
- Longer valve block for ABS/EDL than for ABS alone

Function

The 25-pin ABS control module -J104- and the ABS hydraulic unit make up a compact assembly, located on the left side of the engine compartment. The ABS control module is equipped with Diagnostic Trouble Code (DTC) memory and On Board Diagnostic (OBD) capability. The 16-pin Data Link Connector (DLC) is located behind a cover next to the ashtray.

"On Board Diagnostic (OBD)" refers to the electrical and electronic parts of ABS or ABS/EDL; in other words, only malfunctions related to the electrical connections to the ABS control module are recognized (e.g. inlet or outlet valve open circuit).

The ABS control module recognizes malfunctions during ABS or ABS/EDL operation and stores them in permanent memory, the contents of which can be recalled years later even if battery power has been disconnected.

Isolated malfunctions that occur sporadically are also recognized and stored. If these malfunctions do not occur again within the next 50 vehicle starts and driving sequences, DTC memory will be erased with the exception of "control module malfunctioning".

After switching the ignition on, the ABS warning light -K47- and the warning light for brake system -K118- light up for approx. 2 seconds.

01-78

During this period a self-test sequence is carried out by the ABS control module to check the following functions:

- Battery positive voltage (B+) supply is checked; must be at least 10.0 volts
- The ABS control module, including valve windings, is checked
- An ABS wheel speed sensor (electrical) test is carried out; fully completed at 20 km/h (approx. 12 mph)
- ABS control module coding is checked

The On Board Diagnostic (OBD) program must be initiated at the start of the troubleshooting process by checking for stored malfunction information using the VAG 1551 scan tool.

VAG 1551 scan tool

The Diagnostic Trouble Code (DTC) information displayed by the scan tool is used in conjunction with a DTC table, which lists possible causes of the malfunction and suggested repairs.

With the Teves 20 GI system, the On Board Diagnostic (OBD) program has been complemented by the following functions:

- Read Measuring Value Block
- Code Control Module
- Basic Setting (only required for vehicles with EDL)
- Output Diagnostic Test Mode

On Board Diagnostic (OBD), technical data

Teves 20 GI ABS control module - 104-

When checking Diagnostic Trouble Code (DTC) memory, ABS control module identification will be displayed on the VAG 1551 scan tool.

Example:

- 3A0 907 379 ABS
- 3A0 907 379 A ABS/EDL

For specific applications ⇒ Parts catalog

Diagnostic Trouble Code (DTC) memory

- Permanent memory (DTC memory); contents remain stored even without battery positive voltage (B+) supply
- Access to data by "Rapid data transfer" operating mode 1.

Safety precautions and fundamental points regarding troubleshooting

- ABS is a vehicle safety system; appropriate knowledge is necessary to work on the system.
- In order to check complaints and to be able to carry out pin-point troubleshooting, DTC memory must be checked before starting work on the ABS or ABS/EDL system.
- Do not disconnect or re-connect harness connectors when the ignition is switched on.
- Observe the appropriate instructions regarding the handling of brake fluid ⇒ Repair Manual, Suspension, Wheels, Brakes, Steering, Repair Group 47.
- ABS malfunctions are indicated by the ABS warning light coming on; certain malfunctions will only be recognized at speeds above 20 km/h (12 mph); carry out a road test.
- If the ABS warning light -K47- and the warning light for brake system-K118- do not come on, but the brake system is still not functioning correctly, then the malfunction must be diagnosed in the conventional braking system.

Necessary technical information

- Electrical Wiring Diagrams, Troubleshooting Component Locations
- Repair Manual, Suspension, Wheels, Brakes, Steering, Repair Group 45

01-81

Troubleshooting with VAG 1551 scan tool

Note:

The term On Board Diagnostic (OBD) refers to the electrical and electronic parts of ABS this means that predominantly only ABS control module electrical and wiring malfunctions will be detected.

Start

Connect → → → → 1 - Rapid data transfer

VAG 1551

scan tool

↓

03 - Brake Electronics

↓

02 - Check DTC Memory → → → →

↓ ↓

Malfunction(s) stored in DTC memory

Control Module

does not answer

↓ ↓ ↓

No Yes ↓

↓ ↓ ↓

1. Carry out test drive over 20 km/h (12 mph)
2. Check DTC memory again
3. If still no DTC recognized

Print out list of malfunctions ↓

↓ ↓

06 - End Output ↓

↓ ↓ ↓

A **B** **C**

↓ ↓ ↓

01-82

↓	↓	↓
A	**B**	**C**
↓	↓	↓
Complete	Carry out recommended test steps of ...	♦ 25-pin connector not connected. ♦ No voltage supply from terminal X at ABS control module terminal 23 ♦ Poor Ground (GND) connection at ABS control module terminals 8 and 24

Electrical test(s)

↓	↓	↓
↓	↓	↓

Further repair sequence:

- Again check and erase DTC memory with VAG 1551 scan tool

- Carry out test drive exceeding 20 km/h (13 mph) with ABS controlled braking

- After the test drive, check DTC memory. If, after successful repairs and test drive, "No DTC recognized" appears in the display on the VAG 1551 scan tool, the On Board Diagnostic (OBD) is concluded.

↓

End

01-83

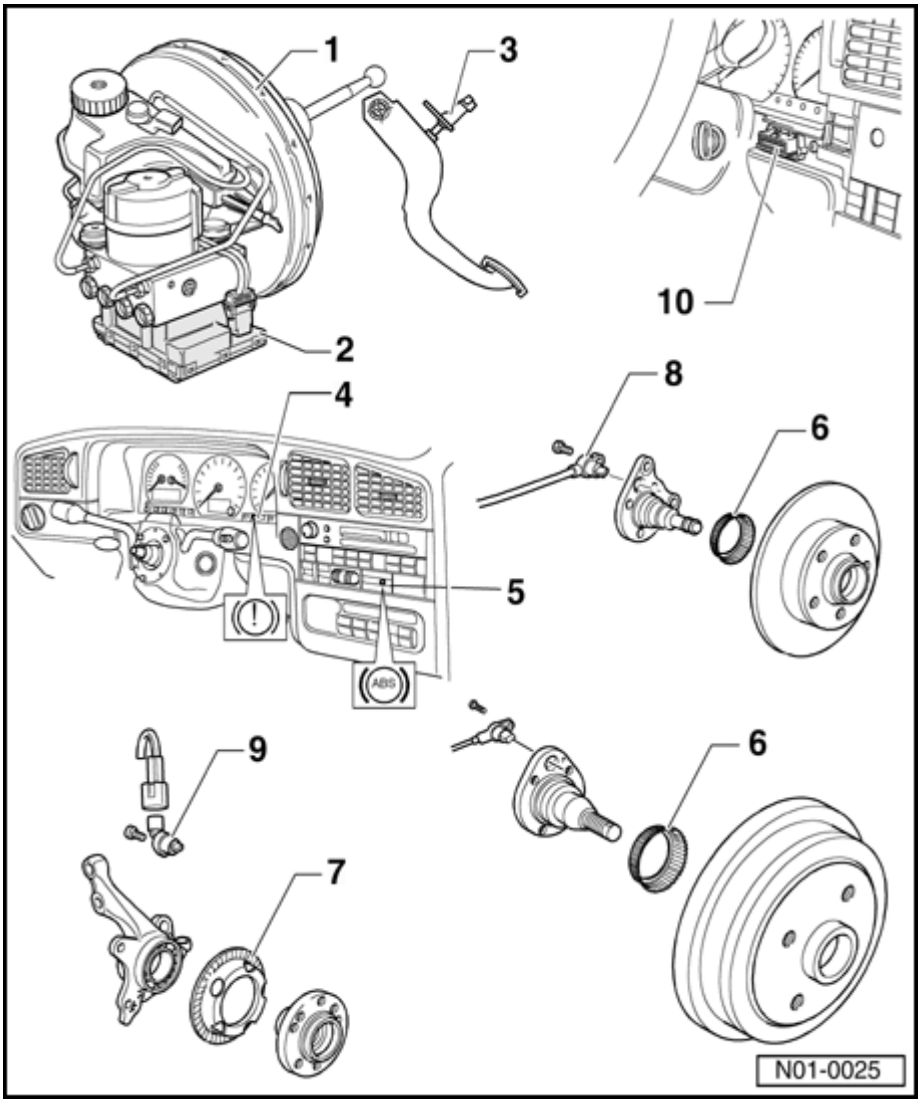

Teves 20 GI ABS and ABS/EDL electrical/electronic component locations

All components marked with an asterisk (*) are monitored by On Board Diagnostic (OBD)

1 - ABS hydraulic unit - N55-

The hydraulic unit consists of the components:

- ABS hydraulic pump - V64-*
- Valve block with inlet and outlet valves
- The ABS hydraulic pump -V64- and valve block must not be separated from one another ⇒ Repair Manual, Suspension, Wheels, Brakes, Steering, Repair Group 45
- When replacing ABS hydraulic unit always seal the old part with the plugs from repair kit Part No. 1H0 698 311 A

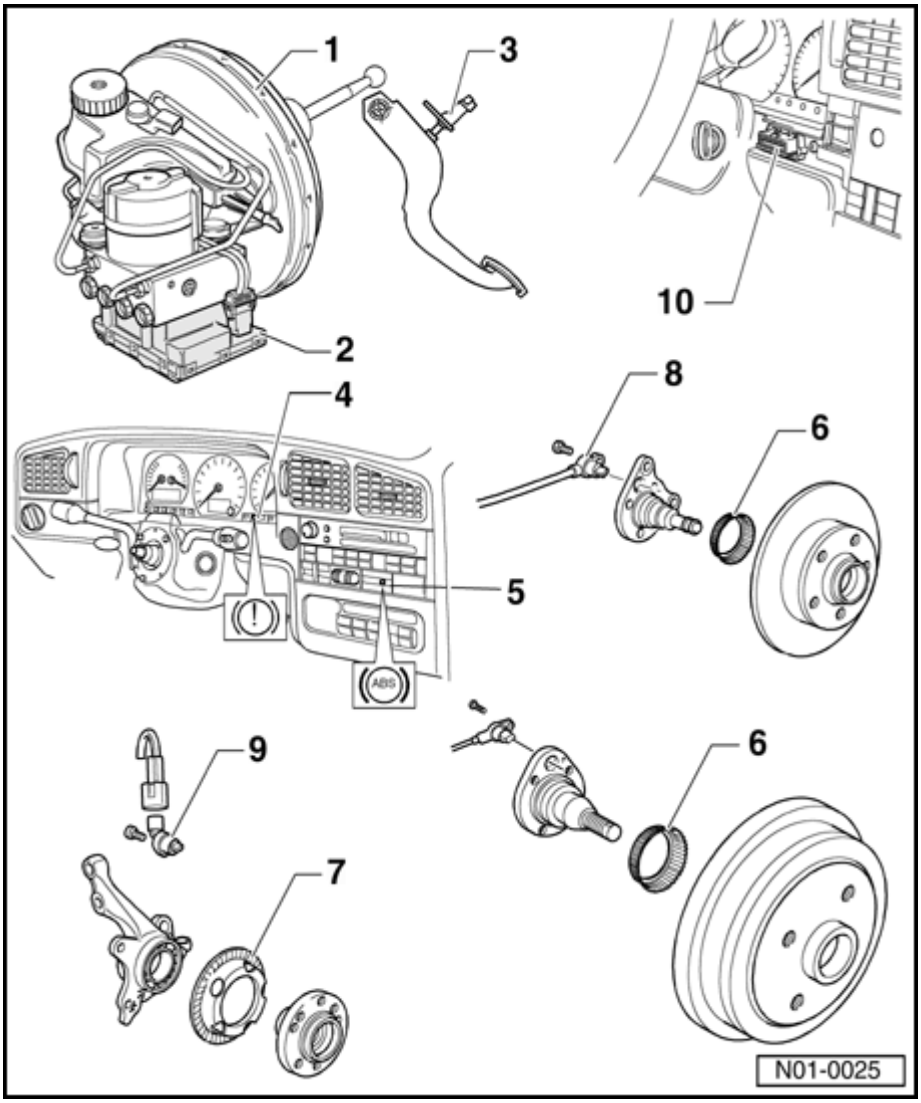

2 - ABS control module -104-*

- Located on ABS hydraulic unit in left side of engine compartment
- Multi-pin connector terminal assignment ⇒ page 01-141
- Checking multi-pin connector to ABS control module ⇒ page 01-129
- Switch ignition off before disconnecting
- Do not disconnect before successfully checking DTC memory

3 - Brake light switch -F-

- The brake light switch is open in the rest position
- Adjusting ⇒ page 01-145
- Can be checked via "Read Measuring Value Block" function ⇒ page 01-107

01-85

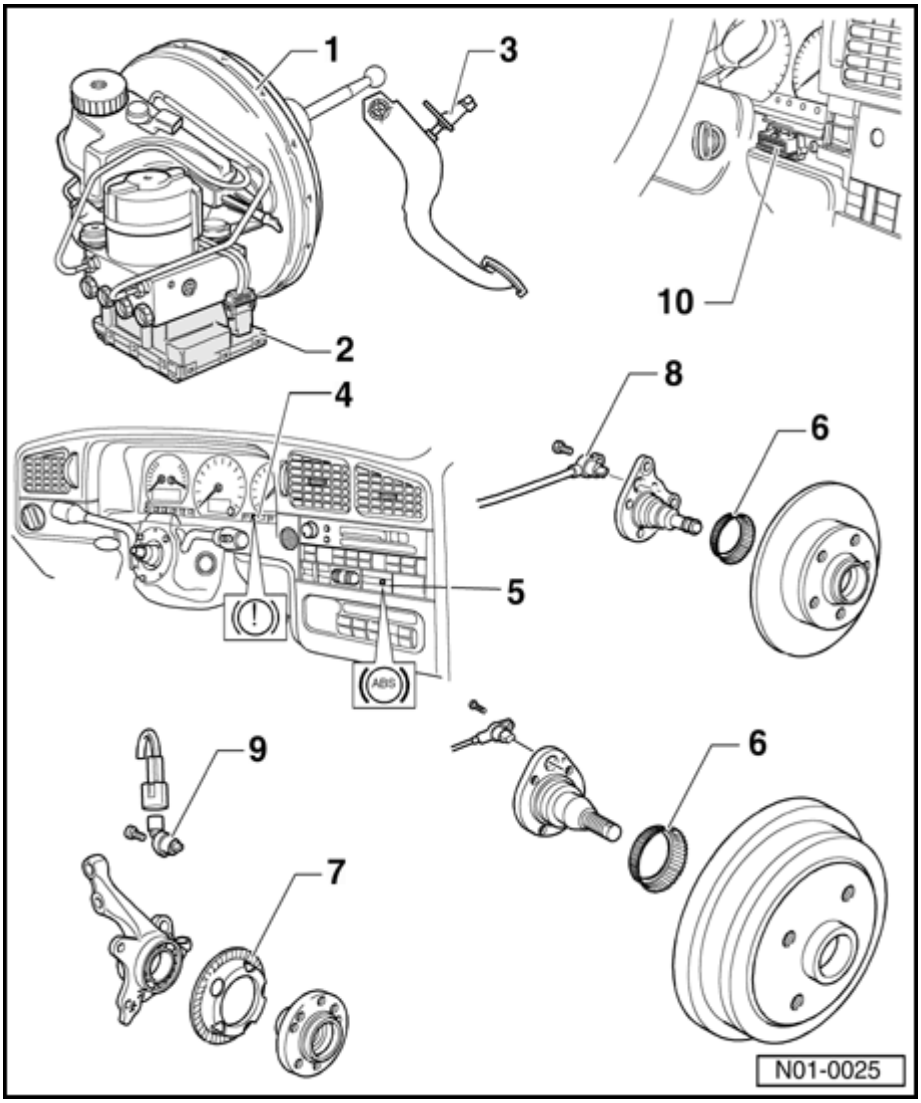

4 - Warning light for brake system -K118-

- Location: in instrument cluster

Function-lights up:

- When parking brake is applied
- When brake fluid level too low
- For approx. 2 seconds after ignition is switched on and/or engine is started
- When the ABS warning light lights up and there is a loss of electronic brake pressure distribution

5 - ABS warning light - K47-

- Location: left next to instrument cluster

Function-lights up:

- For approx. 2 seconds after ignition is switched on and/or engine is started
- If a malfunction is detected (e.g. ABS wheel speed sensor open circuit)

6 - Impulse rotor

- For right- and left-rear speed sensors
- Removing and installing ⇒ Repair Manual, Suspension, Wheels, Brakes, Steering, Repair Group 42

01-86

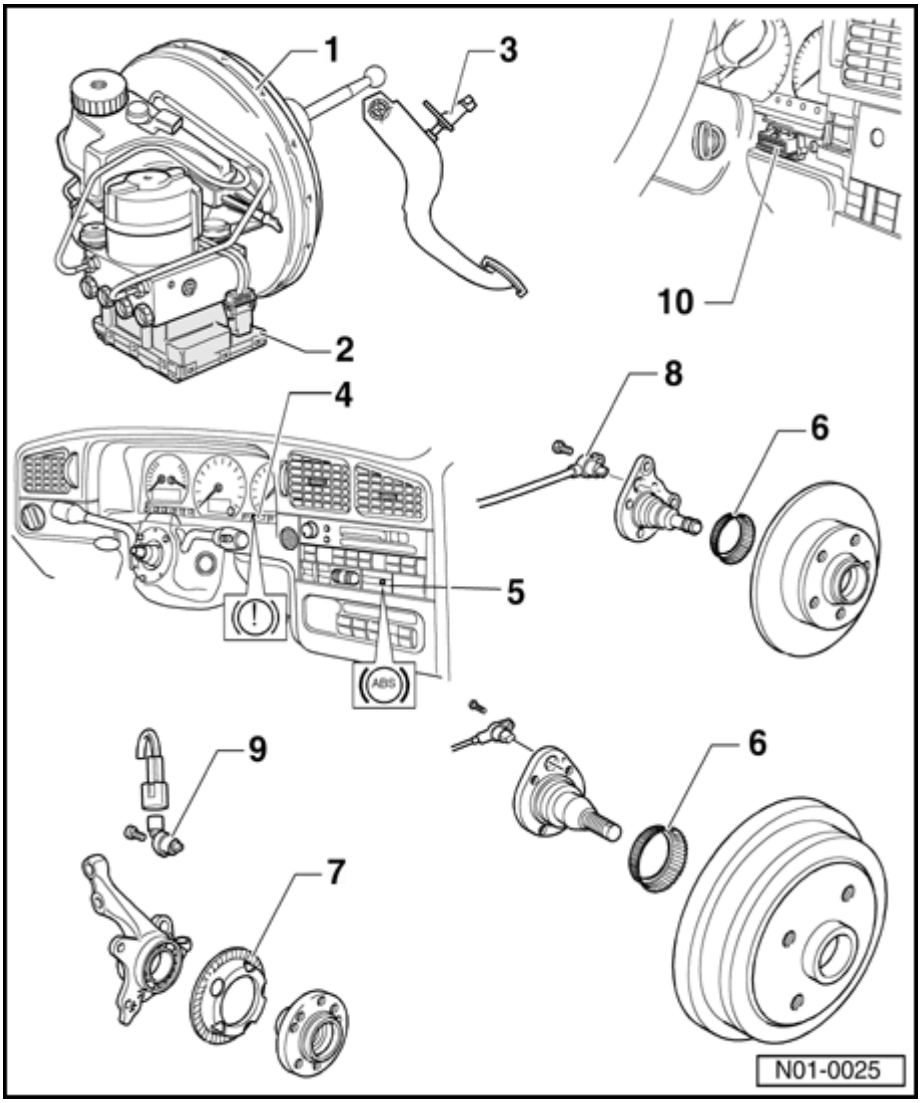

7 - Impulse rotor

- For right- and left-front speed sensors
- Removing and installing

⇒ *Repair Manual, Suspension, Wheels, Brakes, Steering, Repair Group 40*

8 - Right-rear/left-rear ABS wheel speed sensor -G44-/-G46-*

- Installation instructions item

9 - Right-front/left-front ABS wheel speed sensor -G45-/-G47-*

- Before inserting the sensor clean the inner surface of the sensor mounting and coat with lubricating paste G 000 650
- When connecting the ABS wheel speed sensor wire, make sure it is not twisted in the wheelhousing
- Mounting bolt tightening torque: 10 Nm (7 ft lb)

10 - Data Link Connector (DLC)

- Location: on right below instrument cluster

Teves 20 GI ABS and ABS/EDL warning lights, malfunctions displayed

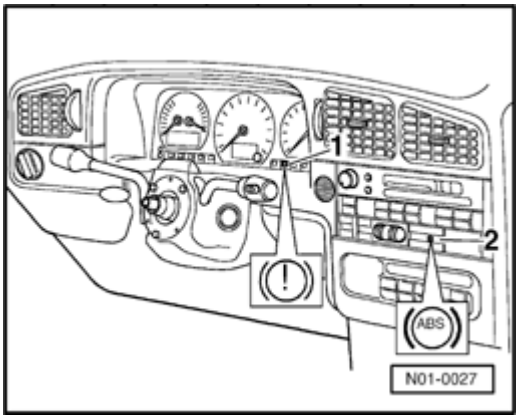

ABS warning light -K47- (-2-) does not go out after completion of self-test sequence (ignition switched on)

Possible malfunctions are:

- Battery positive voltage (B+) supply is below 10 volts
- Malfunction in ABS
- Sensor malfunction after last starting the vehicle (sporadic)
- Open circuit between the ABS warning light module, terminal 1, and the ABS control module, terminal 16
- ABS warning light module faulty

With an ABS malfunction, the anti-lock brake system remains switched off, but the conventional braking system remains fully functional.

In the case of sensor malfunction, the ABS warning light will go out after restarting the engine and reaching a speed in excess of 20 km/h (12 mph).

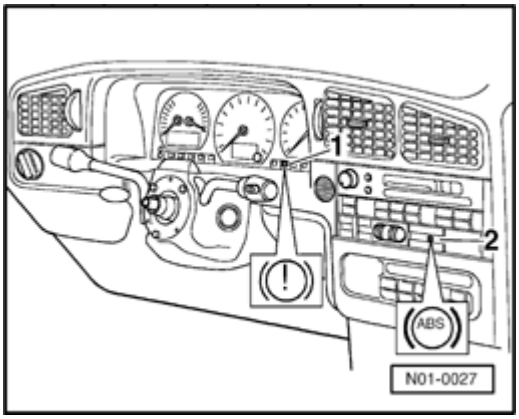

ABS warning light goes out but warning light for brake system -K118- (-1-) remains on

Possible malfunctions are:

- The parking brake is pulled on.
- The brake fluid level is too low.
- Malfunction in control of warning light for brake system -K118- ⇒Electrical Wiring Diagrams, Troubleshooting Component Locations.

If both the ABS warning light -2- and the warning light for brake system -1- stay on, then ABS and EBPD (electronic brake pressure distribution) is non-functional.

In this case there will be a change in braking performance, as the brake pressure to the rear wheels will not be regulated.

Vehicle with ABS/EDL has no EDL function

Complaint: Vehicle does not have EDL function

A possible cause for this complaint is that the brake light switch is incorrectly adjusted, or not functioning "Read Measuring Value Block" function, ⇒ page 01-107 , display group 003.

Teves 20 GI ABS and ABS/EDL On Board Diagnostic (OBD)

Test requirements

- Tires mounted to all four wheels must be of the same (approved) size, inflated to correct pressure
- Conventional brake system OK, including brake light switch and brake lights
- Brake hydraulic lines and connections not leaking (visual check of ABS hydraulic unit, brake calipers, wheel cylinders, tandem master brake cylinder)
- Wheel bearings and wheel bearing play OK
- ABS control module correctly bolted to ABS hydraulic unit.
- Connector on ABS control module -J104- correctly attached (retainer is engaged)
- Check terminals and sockets on ABS or ABS/EDL components for damage and correct seating.
- All fuses according to wiring diagram OK (remove fuse from fuse holder to check).
- Supply voltage OK (at least 10.0 V).

List of selectable functions

Function		Page
01	Check Control Module Version ⇒ page 01-91 , VAG 1551 scan tool, connecting and selecting function	⇒ Page 01-91
02 -	Check DTC Memory	⇒ Page 01-94
03 -	Output Diagnostic Test Mode (DTM)	⇒ Page 01-112
04 -	Basic Setting[1)]	⇒ Page 01-121
05 -	Erase DTC Memory	⇒ Page 01-103
06 -	End Output	⇒ Page 01-103
07 -	Code Control Module	⇒ Page 01-105
08 -	Read Measuring Value Block	⇒ Page 01-107

[1)] Only required for vehicles with EDL

Note:

Currently only the functions listed are available to be used during the On Board Diagnostic (OBD) program.

01-91

VAG 1551 scan tool, connecting and selecting function

- Test requirements ⇒ page 01-89

Note:

- *The ABS function is switched off in the ABS control module during the On Board Diagnostic (OBD) program.*
- *DTC memory can only be erased after successful checking and repair.*

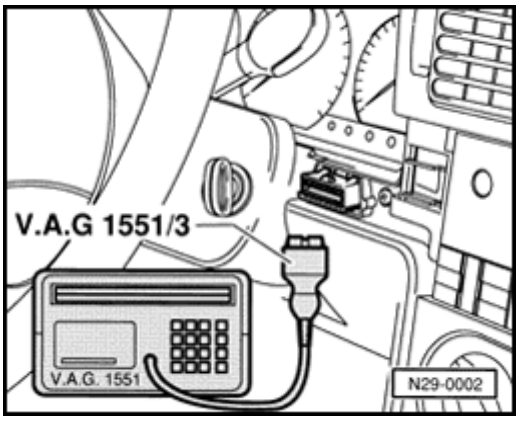

- Remove cover for Data Link Connector (DLC) below instrument cluster on right.
- With ignition switched off, connect VAG 1551 scan tool with VAG 1551/3 adapter cable.

V.A.G. On Board Diagnostic HELP

1 - Rapid data transfer

2 - Blink code output

Indicated on display[1)]

[1)] Operating modes 1 and 2 are displayed alternately.

01-92

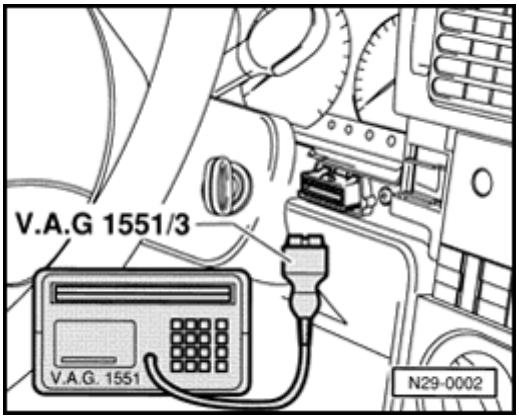

Note:

- *If the display remains blank, check On Board Diagnostic (OBD) connector ⇒ page 01-129 , Electrical test, test steps 14 and 15.*
- *Depending on the program, additional operating information can be printed out by pressing the HELP button on the VAG 1551 scan tool.*
- *The → button is used to advance within the scan tool program sequence.*
- *The PRINT button is used for switching on the printer (warning light in button comes on).*

- Switch ignition on.
- Press PRINT button to switch printer on (indicator lamp in button lights up).
- Press button -1- to select "Rapid data transfer" operating mode 1.

Rapid data transfer **HELP**

Insert address word

Indicated on display

- Press buttons -0- and -3- to insert "Brake Electronics" address word 03.

Rapid data transfer

03 - Brake Electronics

Indicated on display

- Press -Q- button to confirm input.

01-93

3A0 907 379 ABS ITT AE 20 GI V00 →

Coding 04505 **WSC**

ABS control module identification (example) is displayed:

- ABS control module identification number, e.g. 3A0 907 379.
- System designation, e.g. ABS ITT AE 20 GI
- ABS control module code number, e.g. 04505
- WSC XXXXX = Dealership number (WorkShop Code) ⇒ VAG 1551 scan tool operating instructions

ABS control module applications ⇒ Parts catalog

"Code Control Module" function ⇒ page 01-105 .

If the ABS control module identification number is not displayed, List of selectable functions, ⇒ page 01-90 .

01-94

Diagnostic Trouble Code (DTC) memory, checking

Rapid data transfer **Select function**	**HELP**	⮜	Indicated on display - Press buttons -0- and -2- to select the "Check DTC Memory" function 02.
Rapid data transfer **02 - Check DTC Memory**		⮜	Indicated on display - Press -Q- button to confirm input.
DTC recognized	→	⮜	The number of stored diagnostic trouble codes (DTCs) will be indicated, or "No DTC recognized" will be displayed
No DTC recognized	→	⮜	- Press → button. The stored DTCs will be displayed and printed out one after the other in sequence. - In Diagnostic Trouble Code (DTC) table, look up DTCs that are printed out ⇒ page 01-96 . - Press → button. As with "No DTC recognized" scan tool returns to start of program sequence after pressing → button.

01-95

Rapid data transfer **Select function**	**HELP**	<	Indicated on display - Press buttons -0- and -6- to select "End Output" function 06 ⇒ page 01-103 . - Switch ignition off and disconnect Data Link Connectors (DLC). ***Note:*** *If a malfunction was recognized:* *1. Repair malfunction* *2. Check DTC memory (function 02)* *3. Erase DTC memory (function 05)* *4. End output (function 06)* *5. Test drive.* *6. Re-check DTC memory*

01-96

Diagnostic Trouble Code (DTC) table

Notes on DTC table:

- *All the possible malfunctions that can be recognized by the ABS control module -J104- and printed out on the VAG 1551 scan tool are listed on the following pages according to the 5-digit Diagnostic Trouble Code (DTC).*
- *Diagnostic Trouble Codes (DTC) appear only on the print-out (in Rapid data transfer mode).*

Example:

Diagnostic Trouble Code (DTC)

5 digit

00277

- *In addition, the type of malfunction may also appear in the Diagnostic Trouble Code (DTC) table.*
- *Reference is made to individual test steps of the electrical test in the Repairing malfunction column.*
- *Before replacing components indicated as being faulty, check all appropriate wiring, harness connectors and Ground (GND) connections according to the wiring diagram.*
- *After repairs, always check and erase DTC memory again using the VAG 1551 scan tool, also carry out a road test during which the vehicle exceeds a speed of 20 km/h (12 mph).*
- *Repeat the On Board Diagnostic (OBD) procedure after the road test.*

Diagnostic Trouble Code (DTC) table

VAG 1551 Scan Tool printout	Possible cause of malfunction	Repairing malfunction
00000		
No DTC recognized	If "No DTC recognized" is displayed after carrying out repairs, On Board Diagnostic (OBD) program sequence has ended. If, despite "No DTC recognized" being displayed, the ABS system does not operate properly, then proceed as follows: 1. Carry out road test exceeding 20 km/h (12 mph). 2. Again check DTC memory. If there is still no DTC stored: 3. Troubleshoot without On Board Diagnostic (OBD) and work through the complete electrical test ⇒ page 01-129 .	

VAG 1551 Scan Tool printout	Possible cause of malfunction	Repairing malfunction
00283		
ABS Wheel Speed Sensor,LF-G47	Open circuit, short circuit or loose connection in: ♦ ABS wheel speed sensor wire ♦ Connector ♦ ABS wheel speed sensor winding	- Check wiring, connectors, ABS wheel speed sensor and Ground (GND) wiring to ABS control module
	Short circuit in ABS wheel speed sensor	⇒ Electrical test, page 01-129 Test steps 6 and 10
Mechanical malfunction[1)]	Excessive air gap between ABS wheel speed sensor and impulse rotor (signal not OK)	- Check installation of ABS wheel speed sensor and impulse rotor; clean if necessary ⇒ Read measuring value block, function 08, page 01-107 , Display field 1
Signal outside tolerances[1)]	Impulse rotor and ABS wheel speed sensor dirty or damaged	

[1)] Type of malfunction; this malfunction is only recognized above 20 km/h (12 mph); test drive.

VAG 1551 Scan Tool printout	Possible cause of malfunction	Repairing malfunction
00285		
ABS Wheel Speed Sensor,RF-G45	Open circuit, short circuit or loose connection in: ♦ ABS wheel speed sensor wire ♦ Connector ♦ ABS wheel speed sensor winding	- Check wiring, connectors, ABS wheel speed sensor and Ground (GND) wiring to ABS control module
	Short circuit in ABS wheel speed sensor	⇒ Electrical test, page 01-129 Test steps 5 and 9
Mechanical malfunction[1)]	Excessive air gap between ABS wheel speed sensor and impulse rotor (signal not OK)	- Check installation of ABS wheel speed sensor and impulse rotor; clean if necessary ⇒Read measuring value block, function 08, ⇒ Page 01-107 , Display field 2
Signal outside tolerances[1)]	Impulse rotor and ABS wheel speed sensor dirty or damaged	

[1)] Type of malfunction; this malfunction is only recognized above 20 km/h (12 mph); test drive.

VAG 1551 Scan Tool printout	Possible cause of malfunction	Repairing malfunction
00287		
ABS Wheel Speed Sensor,RR-G44	Open circuit, short circuit or loose connection in: ♦ ABS wheel speed sensor wire ♦ Connector ♦ ABS wheel speed sensor winding	- Check wiring, connectors, ABS wheel speed sensor and Ground (GND) wiring to ABS control module
	Short circuit in ABS wheel speed sensor	⇒ page 01-129 , Electrical test, Test steps 7 and 11
Mechanical malfunction[1)]	Excessive air gap between ABS wheel speed sensor and impulse rotor (signal not OK)	- Check installation of ABS wheel speed sensor and impulse rotor; clean if necessary ⇒ page 01-107 , Read measuring value block, function 08, Display field 4
Signal outside tolerances[1)]	Impulse rotor and ABS wheel speed sensor dirty or damaged	

[1)] Type of malfunction; this malfunction is only recognized above 20 km/h (12 mph); test drive.

VAG 1551 Scan Tool printout	Possible cause of malfunction	Repairing malfunction
00290		
ABS Wheel Speed Sensor,LR-G46	Open circuit, short circuit or loose connection in: ♦ ABS wheel speed sensor wire ♦ Connector ♦ ABS wheel speed sensor winding	- Check wiring, connectors, ABS wheel speed sensor and Ground (GND) wiring to ABS control module
	Short circuit in ABS wheel speed sensor	⇒ page 01-129 , Electrical test, Test steps 8 and 12
Mechanical malfunction[1)]	Excessive air gap between ABS wheel speed sensor and impulse rotor (signal not OK)	- Check installation of ABS wheel speed sensor and impulse rotor; clean if necessary ⇒ page 01-107 , Read measuring value block, function 08, Display field 3
Signal outside tolerances[1)]	Impulse rotor and ABS wheel speed sensor dirty or damaged	
00668		
Battery Positive Voltage (B+) Term.30	Faulty voltage supply wires, connections, fuses -S124-	- Check fuses, wires, connections as well as battery positive voltage (B+) supply to ABS control module ⇒ page 01-129 , Electrical test, Test step 2
01044		
Control Module incorrectly coded	An incorrect code number has been entered via VAG 1551 scan tool	- Check ABS control module coding ⇒ page 01-105
	Open or short circuit in wiring harness between terminals 15 and terminal 21	- Check wiring in harness ⇒ page 01-129 , Electrical test, Test step 13

[1)] Type of malfunction; this malfunction is only recognized above 20 km/h (12 mph); test drive.

VAG 1551 Scan Tool printout	Possible cause of malfunction	Repairing malfunction
01130 ABS operation Signal outside tolerance[1)]	Electrical interference from external sources (high frequency radiation; e.g. non-insulated ignition cable)	Sequence: - Check all wiring and connections for short to positive or Ground (GND) - Erase DTC memory - Carry out a test drive exceeding 20 km/h (12 mph) - Check DTC memory again
01276 ABS hydraulic pump-V64 Signal outside tolerance [1)]	♦ Connection electric motor to ABS control module ♦ Short to positive or Ground (GND) or open circuit ♦ Pump motor faulty	- Check wiring, connections output Diagnostic Test Mode (DTM), function 03, ⇒ page 01-112
65535 Control Module Malfunctioning	ABS control module faulty	- Replace ABS control module

[1)] Type of malfunction; this malfunction is only recognized above 20 km/h (12 mph); test drive.

01-103

Diagnostic Trouble Code (DTC) memory, erasing and ending output

Requirements

- DTC memory has been checked

Erasing DTC memory

No DTC recognized	→	⮜	- Indicated on display - Press → button.
Rapid data transfer **Select function**	**HELP**	⮜	Indicated on display (clear for function selection) - Press buttons -0- and -5- to select the "Erase DTC Memory" function 05.
Rapid data transfer **05 - Erase DTC Memory**		⮜	Indicated on display - Press -Q- button to confirm input.
Rapid data transfer **DTC memory is erased**	→	⮜	Indicated on display - Press → button.
Rapid data transfer **Select function**	**HELP**	⮜	Indicated on display (clear for function selection)

01-104

Note:

Attention!

DTC Memory is not interrogated

- *If DTC Memory is not interrogated is displayed, the OBD test sequence is faulty.*
- *Follow the program sequence exactly: first check DTC memory, then erase.*

Ending output

Rapid data transfer **HELP**

Select function

Indicated on display (clear for function selection)

- Press buttons -0- and -6- to select "End Output" function 06.

Rapid data transfer

06 - End Output

Indicated on display

- Press -Q- button to confirm input.

Rapid data transfer **HELP**

Insert address word

Indicated on display

- Switch ignition off.
- Disconnect VAG 1551 scan tool.
- Switch ignition on.
  - ABS warning light -K47- and warning light for brake system -K118- must go out after approx. 2 seconds.

01-105

Code Control Module ((VAG 1551 function 07)

The ABS control module in the vehicle is coded for the specific vehicle application. New ABS control modules from the Parts system are not coded and must be coded after installation.

Coding is only possible after the dealership number has been entered into VAG 1551 scan tool.

Special tools, testers and auxiliary items

- VAG 1551 scan tool with adapter cable VAG 1551/3

Test sequence

- Connect VAG 1551 scan tool and select "Brake Electronics" address word 03 with ignition switched on ⇒ page 01-91 .

Rapid data transfer **Select function**	**HELP**	≺	Indicated on display

- Press buttons -0- and -7- to select "Code Control Module" function 07, and press -Q- button to confirm input.

Rapid data transfer **07 - Code Control Module**	**HELP**	≺	Indicated on display

- Press -Q- button to confirm input.

01-106

Code control module **Enter code number** **(04505)**	⮜	Indicated on display - Enter relevant code number for vehicle and press -Q- button to confirm input ⇒ VAG 1551 scan tool operating instructions. **Code number** **Vehicle type** 04505 Passat 1995 ⮞ (from 02/95)
→	⮜	ABS control module coding indicated on display
Coding 04505 WSC		- Press → button.
Rapid data transfer **HELP** **Select function**	⮜	Indicated on display - Press buttons -0- and -6- to select "End Output" function 06, and press -Q- button to confirm input.

Note:

- *If the ABS control module has been incorrectly coded, the ABS warning light - 47- and the warning light for brake system - 118- will remain on constantly.*
- *If the ABS control module is not coded (Code 00000) or has been incorrectly coded, the ABS warning light - 47- and the warning light for brake system - 118- will flash (once per second).*

01-107

Read Measuring Value Block ((VAG 1551 scan tool function 08)

The ABS control module can transfer a considerable amount of test data. This data delivers information about the operational condition of the system and/or sensors. In many cases the transferred test data provides support for troubleshooting and repair.

The test data has been summarized into single display groups because all the information cannot be evaluated at the same time. The information can be selected via display group numbers.

- Connect VAG 1551 scan tool and select "Brake Electronics" address word 03 with ignition switched on ⇒ page 01-91 .

Rapid data transfer **HELP**

Select function

Indicated on display

- Press buttons -0- and -8- to select "Read Measuring Value Block" function 08, and press -Q- button to confirm input.

Rapid data transfer

08 - Read Measuring Value Block

Indicated on display:

- Press -Q- button to confirm input.

01-108

Checking ABS actual wheel speeds (display group 001)

Read measuring value block

Input display group number

Indicated on display:

- Press buttons -0-, -0- and -1- (display group 001).
- Press -Q- button to confirm input.

Read measuring value block **1** →

0 Km/h 0 Km/h 0 Km/h 0 Km/h

Indicated on display:

Actual wheel speeds will be displayed. These are used to check the ABS wheel speed sensor assignments to wheels. (Vehicle must be raised and wheel turned by hand)

Read measured value block **1** →

→ **1** → **2** → **3** → **4**

In "Read measuring value block" there are always 4 display fields (-arrows-1 to 4).

Display field	Description	Displayed on VAG 1551 scan tool
1	Wheel speed, left front - km/h	0 - 255[1)]
2	Wheel speed, right front - km/h	0 - 255[1)]
3	Wheel speed, left rear - km/h	0 - 255[1)]
4	Wheel speed, right rear - km/h	0 - 255[1)]

[1)] A second mechanic is required to read the values

- Press -C- button.

01-109

Checking ABS first usable voltage signal (display group 002)

ABS control module stores the first usable voltage signal from ABS wheel speed sensor when driving away and displays this as a set value in "Read measuring value block"

Read measured value block

→ 1 → 2 → 3 → 2 → 4

In "Read measuring value block" there are always 4 display fields (-arrows- 1 to 4).

- Values in display fields 1 and 2 must not be above 6 km/h (approx. 4 mph)
- Values in display fields 3 and 4 must not rise above 2 km/h (approx. 1 mph)

If the values are above these, then a malfunction may exist with ABS wheel speed sensor installation. Possible malfunction causes:

- Air gap between speed sensor and impulse rotor too large (check speed sensor is correctly attached to wheel bearing housing).
- Exterior damage to ABS wheel speed sensor or impulse rotor (replace damaged component).

01-110

Display field	Description	Displayed on VAG 1551 scan tool
1	Wheel speed, left front - km/h	2 - 255
2	Wheel speed, right front - km/h	2 - 255
3	Wheel speed, left rear - km/h	0 - 255
4	Wheel speed, right rear - km/h	0 - 255

Read measuring value block

Input display group number

Indicated on display:

- Press buttons -0-, -0- and -2- (display group 002).
- Press -Q- button to confirm input.

Read measuring value block 2 →

255 Km/h 255 Km/h 255 Km/h 255 Km/h

Indicated on display: (Vehicle stationary)

- Drive away slowly until values are displayed on VAG 1551 scan tool
  - Deviations in display fields 1 and 2 below 6 km/h (approx. 4 mph) are OK (see example).
  - Deviations in display fields 3 and 4 below 2 km/h (approx. 1 mph) are OK (see example).

Example:

Read measuring value block 2 →

3 Km/h 6 Km/h 2 Km/h 1 Km/h

Indicated on display:

- Press -C- button.

01-111

Checking brake light switch for ABS and ABS/EDL functions

Read measuring value block

Input display group number

Indicated on display:

- Press buttons -0-, -0- and -3- (display group 003).
- Press -Q- button to confirm input.

Read measuring value block **3** →

0

Indicated on display:

Display field	Test requirements	Displayed on VAG 1551 scan tool
1	♦ Foot brake not operated	0
	♦ Foot brake operated	1

01-112

Output Diagnostic Test Mode (DTM) ((VAG 1551 scan tool function 03)

The output diagnostic test mode is a part of the ABS electrical test. The ABS pump motor and the correct functioning of the hydraulic circuits (assignment of brake lines to wheel brake calipers; valve functions) can be checked for leaks or incorrect connections using the output diagnostic test mode.

Note:

- *The vehicle must be raised until all wheels are free to turn. (second mechanic required to rotate wheels).*
- *The -C- button can be used to exit the test sequence at any time.*
- *After depressing the brake pedal several times the vacuum in the brake servo will be exhausted, therefore more pressure must be applied to the brake pedal in order to attain the same fluid pressure in brake system as that attained with vacuum.*
- *When the vacuum for the brake servo is exhausted it can lead to a situation in which the wheels do not lock start the engine and build-up vacuum in the brake servo.*

01-113

Example:

Indicated on VAG 1551 scan tool display during the output diagnostic test mode:

(Example: left-front wheel, FL)

Output diagnostic test mode - →
IFL: VBAT OFL: 0V Wheel FL locked

IFL = Inlet valve Front Left

VBAT = Voltage BATtery; voltage at valve

OFL = Outlet valve Front Left

0V = 0 Volts; no voltage at valve

Locked/free = Wheel condition; must be checked by second mechanic

Output diagnostic test mode - →
EDL valves/Hyd-P: VBAT Wheel FL/FR locked

Hydr-P = Hydraulic Pump

01-114

- Connect VAG 1551 scan tool and select "Brake Electronics" address word 03 with ignition switched on ⇒ page 01-91 .

- Switch ignition on.

Rapid data transfer **HELP**

Select function

Indicated on display

- Press buttons -0- and -3- to select "Output Diagnostic Test Mode" function 03.

Rapid data transfer

03 - Output Diagnostic Test Mode

Indicated on display

- Press -Q- button to confirm input.

Note:

During the work sequence that follows, the ABS warning light flashes 2 times and the brake system warning light flashes 4 times per second.

- ABS hydraulic pump -V64- must run

Output diagnostic test mode - →

ABS hydraulic pump -V64

Indicated on display

- Press → button within next 60 seconds.

- Brake pedal must not give

01-115

Output diagnostic test mode - → **Operate brakes**	⮜	Indicated on display - Press → button.
Output diagnostic test mode - → **IFL: 0V OFL: 0V Wheel FL locked**	⮜	Indicated on display - Press → button.
Output diagnostic test mode - → **IFL: VBAT OFL: 0V Wheel FL locked**	⮜	Indicated on display - Press → button. • ABS hydraulic pump -V64- must run • Brake pedal must not give.
Output diagnostic test mode - → **IFL: VBAT OFL: VBAT Wheel FL free**	⮜	Indicated on display - Press → button. • ABS hydraulic pump -V64- stops running
Output diagnostic test mode - → **IFL: VBAT OFL: 0V Wheel FL free**	⮜	Indicated on display - Press → button. • Brake pedal must give perceptibly
Output diagnostic test mode - → **IFL: 0V OFL: 0V Wheel FL locked**	⮜	Indicated on display - Press → button.

01-116

Output diagnostic test mode - → **Release brakes**	⮜ Indicated on display - Press → button.
Output diagnostic test mode - → **Operate brakes**	⮜ Indicated on display - Press → button.
Output diagnostic test mode - → **IFR: 0V OFR: 0V Wheel FR locked**	⮜ Indicated on display - Press → button.
Output diagnostic test mode - → **IFR: VBAT OFR: 0V Wheel FR locked**	⮜ Indicated on display - Press → button. • ABS hydraulic pump -V64- must run • Brake pedal must not give
Output diagnostic test mode - → **IFR: VBAT OFR: VBAT Wheel FR free**	⮜ Indicated on display - Press → button. • ABS hydraulic pump -V64- stops running

01-117

Output diagnostic test mode - → **IFR: VBAT OFR: 0V Wheel FR free**	≺ Indicated on display - Press → button. • Brake pedal must give perceptibly
Output diagnostic test mode - → **IFR: 0V OFR: 0V Wheel FR locked**	≺ Indicated on display - Press → button.
Output diagnostic test mode - → **Release brakes**	≺ Indicated on display - Press → button.
Output diagnostic test mode - → **Operate brakes**	≺ Indicated on display - Press → button.
Output diagnostic test mode - → **IRL: 0V ORL: 0V Wheel RL locked**	≺ Indicated on display - Press → button.
Output diagnostic test mode - → **IRL: VBAT ORL: 0V Wheel RL locked**	≺ Indicated on display - Press → button. • ABS hydraulic pump -V64- must run • Brake pedal must not give

01-118

Output diagnostic test mode - → **IRL: VBAT ORL: VBAT Wheel RL free**	⮜ Indicated on display - Press → button. • ABS hydraulic pump -V64- stops running
Output diagnostic test mode - → **IRL: VBAT ORL: 0V Wheel RL free**	⮜ Indicated on display - Press → button. • Brake pedal must give perceptibly
Output diagnostic test mode - → **IRL: 0V ORL: 0V Wheel RL locked**	⮜ Indicated on display - Press → button.
Output diagnostic test mode - → **Release brakes**	⮜ Indicated on display - Press → button.
Output diagnostic test mode - → **Operate brakes**	⮜ Indicated on display - Press → button.

01-119

Output diagnostic test mode - → **IRR: 0V ORR: 0V Wheel RR locked**	⮜ Indicated on display - Press → button.
Output diagnostic test mode - → **IRR: VBAT ORR: 0V Wheel RR locked**	⮜ Indicated on display - Press → button. • ABS hydraulic pump -V64- must run • Brake pedal must not give.
Output diagnostic test mode - → **IRR: VBAT ORR: VBAT Wheel RR free**	⮜ Indicated on display - Press → button. • ABS hydraulic pump -V64- stops running
Output diagnostic test mode - → **IRR: VBAT ORR: 0V Wheel RR free**	⮜ Indicated on display - Press → button. • Brake pedal must give perceptibly
Output diagnostic test mode - → **IRR: 0V ORR: 0V Wheel RR locked**	⮜ Indicated on display - Press → button.
Output diagnostic test mode - → **Release brakes**	⮜ Indicated on display - Press → button.

01-120

Output diagnostic test mode - → E **EDL valves/Hyd-P: VBAT Wh FL/FR locked**	⮜	Indicated on display - Press → button. ***Note:*** *The ABS warning light and brake system warning light go out.*
Function is unknown or → **cannot be carried out at the moment**	⮜	Indicated on display ***Note:*** *The output diagnostic test mode is completed.* - Press → button.
Rapid data transfer HELP **Select function**	⮜	Indicated on display ***Note:*** ♦ *If the ABS warning light does not go out then there is a malfunction in the system.* ♦ *Adhere exactly to the test sequence: First check DTC memory, then erase.* - End output (function 06) ⇒ 01-103 .

01-121

Basic Setting ((VAG 1551 scan tool function 04)

CAUTION!

- ***On vehicles with EDL, the Basic Setting function is used to bleed the ABS hydraulic unit.***
- ***Basic setting is only necessary when at least one brake fluid reservoir is completely empty (e.g. leaks in brake system).***
- ***Make sure that brake fluid filling pressure does not exceed 1 bar (14.5 psi) when using pressure filler and bleeder unit (e.g. US 111). The maximum brake fluid pressure may need to be reduced to 1 bar (14.5 psi) ⇒filler and bleeder unit operating instructions.***
- ***Following this procedure the remainder of the brake system must be conventionally bled.***

Note:

If the filling pressure exceeds 1 bar (14.5 psi) the ABS hydraulic unit may not be bled sufficiently.

- Connect filler and bleeder unit, e.g. US 1116.

01-122

- Connect VAG 1551 scan tool and select "Brake Electronics" address word 03 with ignition switched on ⇒ page 01-91 .

Rapid data transfer HELP
Select function

Indicated on display

- Press buttons -0- and -4- to select "Basic Setting" function 04.

Rapid data transfer
04 - Basic Setting

Indicated on display:

- Press -Q- button to confirm input.

Basic setting HELP
Input display group number

Indicated on display:

- Press buttons -0-, -0- and -1- (display group 001).
- Press -Q- button to confirm input.

System in basic setting 1
Depress pedal and hold...

Indicated on display:

Note:

Operate brake pedal with substantial foot pressure and hold.

- Pedal moves down
- Hydraulic pump runs
- Pedal comes back

System in basic setting 1
Rel. pedal FR/FL bleed screw OPEN 3

Indicated on display:

- Press -3- button.

01-123

System in basic setting 2 **Please wait... (10 secs.)**	⮜	Indicated on display: • ABS hydraulic pump runs.
System in basic setting 2 **Depr. pedal 10 bleed screw CLOSED 3**	⮜	Indicated on display: - Press -3- button.
System in basic setting 3 **Depress pedal and hold...**	⮜	Indicated on display: - Operate pedal with substantial foot pressure and hold. ♦ Pedal moves down ♦ Hydraulic pump runs ♦ Pedal comes back
System in basic setting 3 **Rel. pedal FR/FL bleed screw OPEN 3**	⮜	Indicated on display: - Press -3- button.
System in basic setting 4 **Please wait... (10 secs.)**	⮜	Indicated on display: • ABS hydraulic pump runs.
System in basic setting 4 **Depr. pedal 10 bleed screw CLOSED 3**	⮜	Indicated on display: - Press -3- button.

01-124

System in basic setting 5 **Depress pedal and hold...**	⮜	Indicated on display: - Operate pedal with substantial foot pressure and hold. ♦ Pedal moves down ♦ Hydraulic pump runs ♦ Pedal comes back
System in basic setting 5 **Rel. pedal FR/FL bleed screw OPEN 3**	⮜	Indicated on display: - Press -3- button.
System in basic setting 6 **Please wait... (10 secs.)**	⮜	Indicated on display: • ABS hydraulic pump runs.
System in basic setting 6 **Depr. pedal 10 bleed screw CLOSED 3**	⮜	Indicated on display: - Press -3- button.
System in basic setting 7 **Depress pedal and hold...**	⮜	Indicated on display: - Operate pedal with substantial foot pressure and hold. ♦ Pedal moves down ♦ Hydraulic pump runs ♦ Pedal comes back

01-125

System in basic setting 7 **Rel. pedal FR/FL bleed screw OPEN 3**	⮜	Indicated on display: - Press -3- button.
System in basic setting 8 **Please wait... (10 secs.)**	⮜	Indicated on display: • ABS hydraulic pump runs.
System in basic setting 8 **Depr. pedal 10 bleed screw CLOSED 3**	⮜	Indicated on display: - Press -3- button.
System in basic setting 9 **Depress pedal and hold...**	⮜	Indicated on display: - Operate pedal with substantial foot pressure and hold. ♦ Pedal moves down ♦ Hydraulic pump runs ♦ Pedal comes back
System in basic setting 9 **Rel. pedal FR/FL bleed screw OPEN 3**	⮜	Indicated on display: - Press -3- button.

01-126

System in basic setting 10 **Please wait... (10 secs.)**	⮜	Indicated on display: • ABS hydraulic pump runs.
System in basic setting 10 **Depr. pedal 10 bleed screw CLOSED 3**	⮜	Indicated on display: - Press -3- button.
System in basic setting 11 **Depress pedal and hold...**	⮜	Indicated on display: - Operate pedal with substantial foot pressure and hold. ♦ Pedal moves down ♦ Hydraulic pump runs ♦ Pedal comes back
System in basic setting 11 **Rel. pedal FR/FL bleed screw OPEN 3**	⮜	Indicated on display: - Press -3- button.
System in basic setting 12 **Please wait... (10 secs.)**	⮜	Indicated on display: • ABS hydraulic pump runs.
System in basic setting 12 **Depr. pedal 10 bleed screw CLOSED 3**	⮜	Indicated on display: - Press -3- button.

01-127

System in basic setting 13 **Depress pedal and hold...**	⮜	Indicated on display: - Operate pedal with substantial foot pressure and hold. ♦ Pedal moves down ♦ Hydraulic pump runs ♦ Pedal comes back
System in basic setting 13 **Rel. pedal FR/FL bleed screw OPEN 3**	⮜	Indicated on display: - Press -3- button.
System in basic setting 14 **Please wait... (10 secs.)**	⮜	Indicated on display: • ABS hydraulic pump runs.
System in basic setting 14 **Depr. pedal 10 bleed screw CLOSED 3**	⮜	Indicated on display: - Press -3- button.
System in basic setting 15 **Depress pedal and hold...**	⮜	Indicated on display: - Operate pedal with substantial foot pressure and hold. ♦ Pedal moves down ♦ Hydraulic pump runs ♦ Pedal comes back

01-128

System in basic setting 15 **Rel. pedal FR/FL bleed screw OPEN 3**	⮜	Indicated on display: - Press -3- button.
System in basic setting 16 **Please wait... (10 secs.)**	⮜	Indicated on display: • ABS hydraulic pump runs.
System in basic setting 16 **Depr. pedal 10 bleed screw CLOSED 3**	⮜	Indicated on display: - Press -3- button.
System in basic setting 17 **Partial bleeding ended**	⮜	Indicated on display: - Press → button.
Rapid data transfer HELP **Select function**	⮜	Indicated on display - Press buttons -0- and -6- to select "End Output" function 06.
Rapid data transfer **06 - End Output**	⮜	Indicated on display - Press -Q- button to confirm input.
Rapid data transfer HELP **Insert address word**	⮜	Indicated on display - Switch ignition off. - Disconnect VAG 1551 scan tool. - Bleed brake hydraulic system ⇒ *Repair Manual, Suspension, Wheels, Brakes, Steering, Repair Group 47* .

Teves 20 GI ABS and ABS/EDL electrical test

Electrical test steps (from ⇒ Page 01-132) are valid when:

- On Board Diagnostic (OBD) test program gives no indication of the source of the malfunction. Work through complete electrical test.
- On Board Diagnostic (OBD) provides direct indication of the source of the malfunction. Only carry out the test steps recommended in the Diagnostic Trouble Code (DTC) table (pin-pointed entry).

Test requirements

- Fuses -S16-, -S20- OK.
- Fuses 1 and 2 for control module - ABS - S123- and -S124- OK (remove fuses from fuse holder to check).
- Switch ignition and electrical consumers off before beginning test (headlights, lighting, fan, etc.).
- Disconnect multi-pin harness connector from ABS control module -J104- and connect VAG 1598/21 test box -1- to harness connector -2-.

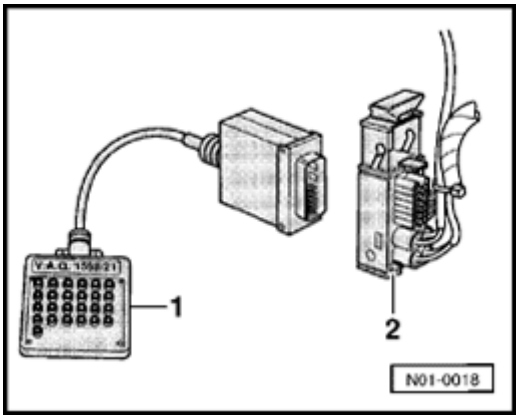

CAUTION!

The specifications listed in the electrical test table are matched to the specified multimeter (Fluke 3 or equivalent) and are not necessarily valid for other test equipment.

01-130

Multi-pin connector terminal assignments

Note:

All terminals not listed are currently not assigned and must never be connected to other components

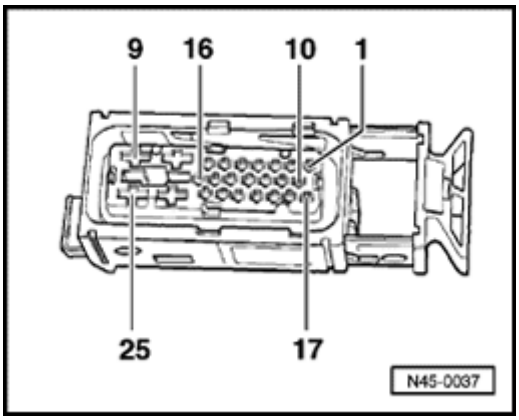

ABS control module harness connector T25

Terminal	Connected to component ...
1	⇒ Right rear ABS wheel speed sensor -G44-
2	⇒ Left rear ABS wheel speed sensor -G46-
3	⇒ Right front ABS wheel speed sensor -G45-
4	⇒ Left front ABS wheel speed sensor -G47-
6	⇒ Coding bridge to terminal 22
8	⇒ Ground (GND) terminal 31
9	⇒ Battery positive (B+) via -S124-
10	⇒ Left rear ABS wheel speed sensor -G46-
11	⇒ Left front ABS wheel speed sensor -G47-
12	⇒ Brake light switch -F-

01-131

Terminal	Connected to component ...
13	⇒ Connector T16/7, K wire
16	⇒ ABS warning light activation
17	⇒ Right rear ABS wheel speed sensor -G44-
18	⇒ Right front ABS wheel speed sensor -G45-
22	⇒ Coding bridge to terminal 15
23	⇒ Voltage supply terminal X
24	⇒ Ground (GND) terminal 31
25	⇒ Battery positive (B+) via -S123-

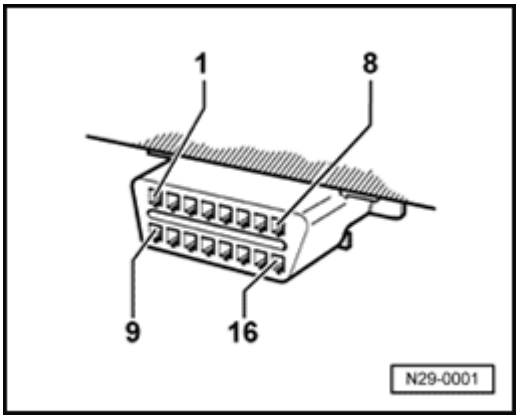

Data Link Connector (DLC) for voltage supply and On Board Diagnostic (OBD) with VAG 1551 scan tool

Terminal 4	=	Ground (GND) (terminal 31)
Terminal 7	=	K wire via junction box TV14 (above relay panel), connector T2d/2 to ABS control module -J104- terminal 42
Terminal 16	=	Battery positive voltage (B+) (terminal 30) via -S22-

01-132

Electrical test table

Test equipment and aids required:

- Test box VAG 1598/21
- VW 1594 connector test kit
- Multimeter (Fluke 83 or equivalent)

Notes on electrical test table

- *The socket number designations on the VAG 1598 test box are identical to the terminal designations on the ABS control module -J104- ⇒ Electrical Wiring Diagrams, Troubleshooting & Component Locations.*
- *If the measured values deviate from the specifications, repair the malfunction as described in the right-hand column of the table ⇒Electrical Wiring Diagrams, Troubleshooting & Component Locations.*
- *If the values are attained, also check wiring for short circuits to positive and Ground.*
- *Conduct continuity checks with VW 1594 connector test kit (used for bridging terminals/sockets).*
- *If the measured values deviate only slightly from the specifications, clean sockets and connectors for tester and adapter cables (with contact spray G 000 700 04) and repeat the test.*
- *Before replacing components, check wiring and connections and also, particularly for specifications of less than 10 Ω, repeat the resistance test on the component.*

01-133

Switch to voltage measuring range - 20 V					
Test step	**VAG 1598/21 sockets**	**Test of**	• Test conditions - Additional operations	**Specified value**	**Repairing malfunction**
1	8 + 25	Voltage supply for ABS hydraulic pump motor (terminal 30) on ABS control module -J104-	• Ignition switched off	10.0 - 14.5 V	- Check wire from terminal 8 to Ground (GND) - Check wire from terminal 25 via fuse 1 for control module - ABS -S123- to battery positive (B+)
2	9 + 24	Voltage supply for the inlet and outlet solenoid valves (terminal 30) on ABS control module -J104-	• Ignition switched off	10.0 - 14.5 V	- Check wire from terminal 24 to Ground (GND) - Check wire from terminal 9 via fuse 2 for control module - ABS -S124- to battery positive (B+)

01-134

Switch to voltage measuring range - 20 V					
Test step	**VAG 1598/21 sockets**	**Test of**	• Test conditions - Additional operations	**Specified value**	**Repairing malfunction**
3	8 + 23	Voltage supply (terminal X) on ABS control module -J104-	• Ignition switched on	10.0 - 14.5 V	- Check wire from terminal 8 to Ground (GND) - Check wire from terminal 23 to terminal D/3 (relay panel)
4	8 + 12	Function of brake light switch -F-	• Ignition switched off - Brake pedal not depressed - Depress brake pedal	0.0 - 0.5 V 10.0 - 14.5 V	- Check fuse -S20- and brake light switch -F-. - Check wire from terminal 8 to Ground (GND) - Check wire from terminal 12 to terminal W/4 (relay panel)

01-135

Switch to resistance measuring range - 2 kΩ					
Test step	**VAG 1598/21 sockets**	**Test of**	• Test conditions - Additional operations	**Specified value**	**Repairing malfunction**
5	3 + 18	Resistance of right front ABS wheel speed sensor -G45-	• Ignition switched off	1.0 - 1.3 kΩ	- Check connector T2d - Check resistance of ABS wheel speed sensor (1.0 - 1.3 kΩ) - Check wire to ABS wheel speed sensor, move wire while checking (loose connection)
6	4 + 11	Resistance of left front ABS wheel speed sensor -G47-	• Ignition switched off	1.0 - 1.3 kΩ	- Check connector T2f - Check resistance of ABS wheel speed sensor (1.0 - 1.3 kΩ) - Check wire to ABS wheel speed sensor, move wire while checking (loose connection)

01-136

Switch to resistance measuring range - 2 kΩ					
Test step	**VAG 1598/21 sockets**	**Test of**	• Test conditions - Additional operations	**Specified value**	**Repairing malfunction**
7	1 + 17	Resistance of right rear ABS wheel speed sensor -G44-	• Ignition switched off	1.0 - 1.3 kΩ	- Check connector T2c - Check resistance of ABS wheel speed sensor (1.0 - 1.3 kΩ) - Check wire to ABS wheel speed sensor, move wire while checking (loose connection)
8	2 + 10	Resistance of left rear ABS wheel speed -G46-	• Ignition switched off	1.0 - 1.3 kΩ	- Check connector T2e - Check resistance of ABS wheel speed sensor (1.0 - 1.3 kΩ) - Check wire to ABS wheel speed sensor, move wire while checking (loose connection)

Switch to voltage measuring range - 2 V					
Test step	**VAG 1598/21 sockets**	**Test of**	• Test conditions - Additional operations	**Specified value**	**Repairing malfunction**
9	3 + 18	Right front ABS wheel speed sensor -G45- voltage signal	• Vehicle raised • Ignition switched off - Rotate right front wheel at approx. 1 rev./sec.	Min. 65 mV alternating voltage	- Check installation of ABS wheel speed sensor and impulse rotor - Check whether ABS wheel speed sensor has been interchanged. Read measuring value block, ⇒ page 01-107
10	4 + 11	Left front ABS wheel speed sensor -G47- voltage signal	• Vehicle raised • Ignition switched off - Rotate left front wheel at approx. 1 rev./sec.	Min. 65 mV alternating voltage	- Check installation of ABS wheel speed sensor and impulse rotor - Check whether ABS wheel speed sensor has been interchanged. Reading measured value ⇒ page 01-107

01-138

Switch to voltage measuring range - 2 V, Resistance measurement - 200 Ω for test step 13					
Test step	**VAG 1598/21 sockets**	**Test of**	• Test conditions - Additional operations	**Specified value**	**Repairing malfunction**
11	1 + 17	Right rear ABS wheel speed sensor -G44- voltage signal	• Vehicle raised • Ignition switched off - Rotate right rear wheel at approx. 1 rev./sec.	190 mV to 1140 mV	- Check installation of ABS wheel speed sensor and impulse rotor - Check whether ABS wheel speed sensor has been interchanged. Read measuring value block, ⇒ page 01-107
12	2 + 10	Left rear ABS wheel speed sensor -G46- voltage signal	• Vehicle raised • Ignition switched off - Rotate left rear wheel at approx. 1 rev./sec.	190 mV to 1140 mV	- Check installation of ABS wheel speed sensor and impulse rotor - Check whether ABS wheel speed sensor has been interchanged. Read measuring value block, ⇒ page 01-107
13	15 + 21	Coding bridge	• Ignition switched off	0.0 -1.0 Ω	- Check wire and wiring connections in harness connector - Replace if value deviates from specifications

Switch to voltage measuring range - 20 V for test step 14, Resistance measurement - 200 Ω for test step 15					
Test step	**VAG 1598/21 sockets**	**Test of**	• Test conditions - Additional operations	**Specified value**	**Repairing malfunction**
14	-	Voltage supply for VAG 1551 scan tool, data link connector T16	- Connect multimeter (Fluke 83/equivalent) to T16 (black) using adapter cables from VW 1594 connector test kit ◆ Terminal 4[1]: Ground ◆ Terminal 16[1]: positive (B+)	10.0 - 14.5 V	- Check wire from T16/4 to Ground (GND) - Check wire from T16/16 via -S22- to terminal 30
15	-	Resistance of K wire for On Board Diagnostic (OBD) data link connector T16	• Ignition switched off - Connect multimeter (Fluke 83/equivalent) to VAG 1598/21 test box socket 6 and data link connector T16, terminal 7[1] using adapter cables from VW 1594 connector test kit	Max. 1.5 Ω	- Check wire from TV14 to terminal 13 - Check wire from T16/7 via TV14 to terminal 13

[1] ⇒ page 01-130 , terminal assignment of connectors for voltage supply and On Board Diagnostic (OBD) with the VAG 1551 scan tool.

01-140

Functional check: ABS warning light -K47-					
Test step	**VAG 1598/21 sockets**	**Test of**	• Test conditions - Additional operations	**Specified value**	**Repairing malfunction**
16	-	Function of ABS warning light -K47-	• Ignition switched off - Switch ignition on	Warning light -K47- lights up	- Check wire from terminal W/2 (relay panel) to Ground (GND) - Check wire from terminal X/8 (relay panel) via -K47- to terminal X/3 (relay panel), -K47- (12 V; 1.2 W) replace if necessary - Check wire from terminal 16 to terminal W/2 (relay panel)
17	-	Function of warning light for brake system -K118-	• Ignition switched off - Switch ignition on	Warning light for brake system -K118- lights up	- Check wire from terminal U2/10 (replay plate) to Ground (GND) - Check wire from terminal U2/10 (relay panel) via -K47- to terminal W/2 - Check wire from terminal 16 to terminal W/2 (relay panel) - Check wire from terminal U2/10 to terminal 28/18 (instrument cluster connector)

01-141

ABS control module, removing and installing

Location: bolted to the ABS hydraulic unit, left side of engine compartment

Removing:

CAUTION!

Determine correct radio anti-theft coding before disconnecting the battery.

- Disconnect battery.
- Remove coolant expansion tank and swing to one side.

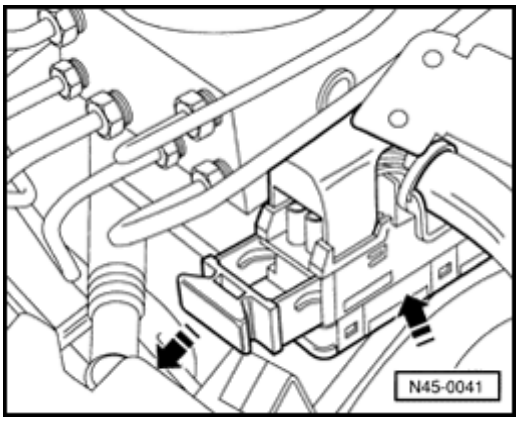

- Disconnect harness connector from ABS control module.
- Connect bleeder bottle with bleeder hose to left-front brake caliper bleeder screw and open bleeder screw.
- Depress brake pedal at least 60 mm (2-3/8 in.).
- Install brake pedal loading device (e.g. VAG 1238 B).
- Close front left bleeder screw.
- Remove heat shield from tandem master brake cylinder.

01-142

- Disconnect brake lines from brake master cylinder and ABS hydraulic unit and seal brake lines and threaded holes with plugs from repair kit Part No. 1H0 698 311 A.

- Remove Torx socket-head bolts (T25) on ABS hydraulic unit mounting bracket.

- Remove ABS hydraulic unit.

- Pull ABS hydraulic pump motor harness connector off ABS control module.

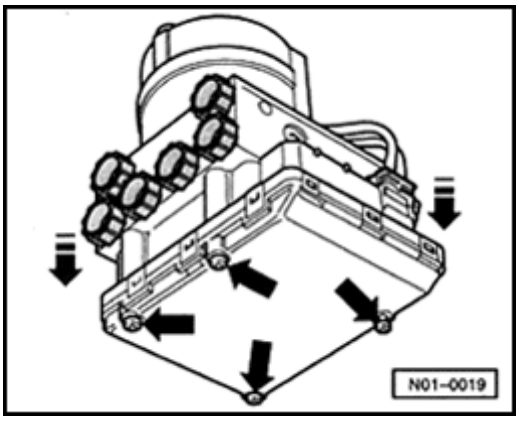

- Remove bolts from ABS control module and pull control module off.

  Do not tilt ABS control module when pulling off.

  - Cover control module solenoids with a lint-free cloth.

After separating the ABS control module and ABS hydraulic unit, protect the valve dome.

Installing:

CAUTION!

- ***Only remove the sealing plugs on the ABS hydraulic unit just before the particular brake line is to be installed.***

- ***If the sealing plugs are removed too soon, brake fluid can escape and it can then no longer be guaranteed that the unit is sufficiently filled or adequately bled.***

- ***There must not be anything in the area of the ABS control module that can contaminate the valve block.***

- Bolt ABS control module to ABS hydraulic unit.

  Maximum tightening torque: 4 Nm (35 in lb)

- Connect ABS hydraulic pump motor harness connector.

The remainder of the installation is the reverse of the removal sequence.

Bleeding brake system

⇒ *Repair Manual, Suspension, Wheels, Brakes, Steering, Repair Group 47* .

Coding ABS control module ⇒ page 01-105 .

01-144

Tightening torques

Control module to hydraulic unit		
Max.	4 Nm	(35 in lb)
ABS hydraulic unit to bracket (Torx socket-head bolts)	8 Nm	(71 in lb)
Tandem master brake cylinder nut to brake servo	25 Nm	(18 ft lb)
Brake lines on ABS unit:		
M10 x 1	15 Nm	(11 ft lb)
M12 x 1	15 Nm	(11 ft lb)

01-145

Brake light switch, adjusting

Note:

Remove brake light switch to adjust.

- Remove brake light switch by rotating 90° to right.
- Pull brake light switch plunger fully out.
- Press brake pedal down as far as possible by hand.
- Guide brake light switch through assembly opening and reinstall by turning 90° to left.
- Release brake pedal.
- Check function of brake light switch.

Volkswagen Passat

Official Factory Repair Manual

1995, 1996, 1997
Gasoline, Turbo Diesel, TDI
4-cylinder and VR6, including wagon

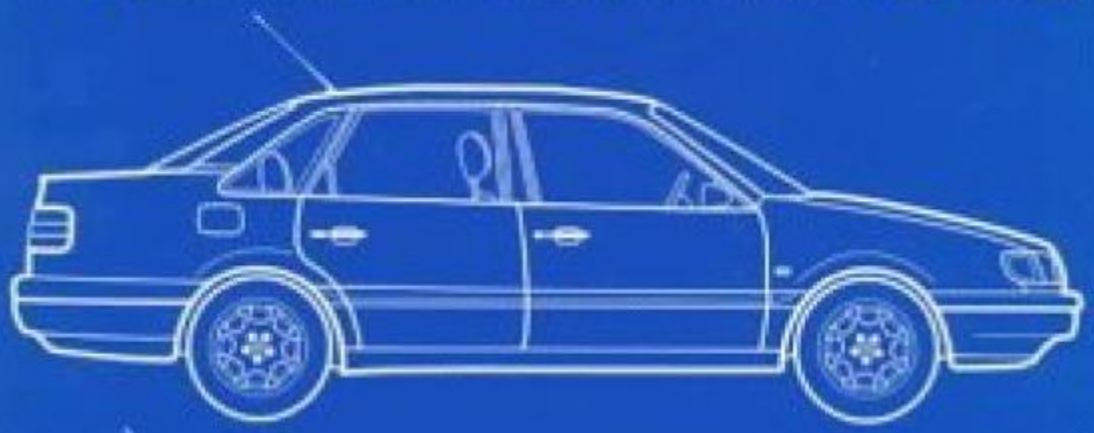

Robert Bentley

PASSAT '95 - '97

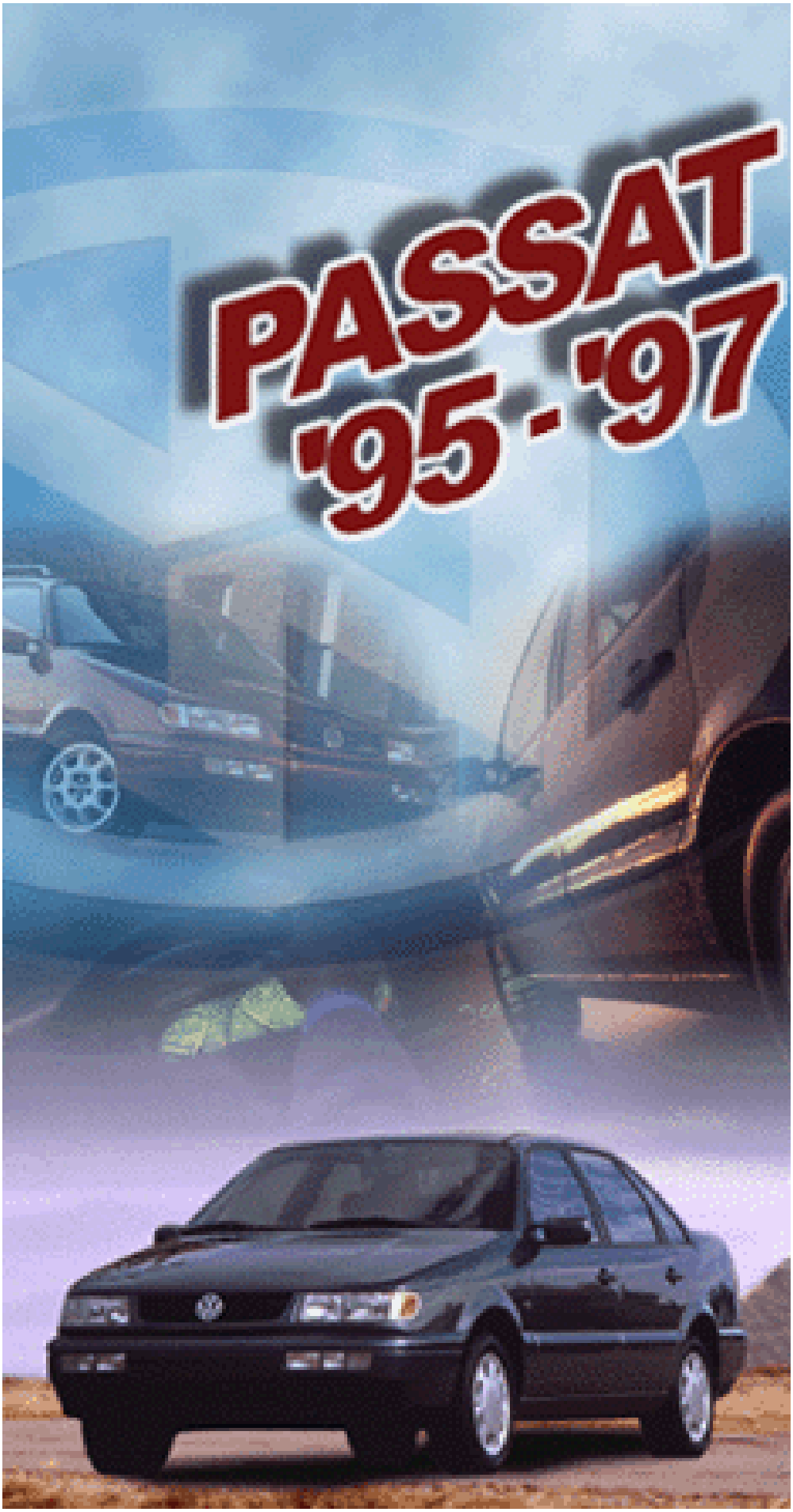

Suspension, Wheels, Brakes, Steering

00 - General, Technical data

Suspension, Wheels, Brakes, Steering
Technical data
Steering
Brakes
Wheels, tires

40 - Front suspension

Front Wheel Suspension, Shafts and Axle
Front suspension, servicing (Base suspension)
Sub-frame, stabilizer bar and control arm (Base suspension)
Ball joint, checking (Base and Plus suspension)
Reworking cap nut in side member (Base and Plus suspension)
Wheel bearing, suspension strut and drive shaft, removing and installing (Base running gear)
Front suspension strut, servicing (Base and Plus suspension)
Front suspension, servicing (Plus suspension)
Sub-frame, stabilizer bar and control arm, removing and installing (Plus suspension)
Ball joint, removing and installing (Plus running gear)
Wheel bearing and suspension strut, removing and installing (Plus suspension)
Drive shaft, removing and installing (Plus running gear)
Drive shaft, repairing
Outer constant velocity joint, checking
Inner constant velocity joint, checking
Drive shaft with tripod joint, repairing
Drive axle with triple-rotor joint, removing and installing
Drive axle with triple-rotor joint, servicing
Triple-rotor joint, disassembling
Triple-rotor joint, assembling

42 - Rear suspension

Rear Wheel Suspension, Shafts and Axle
Rear axle, servicing (vehicles with front wheel drive)
Reworking cap nut in side member (front wheel drive vehicles)
Suspension strut, disassembling and assembling (front wheel drive vehicles)

Wheel bearings, servicing
Drum brakes (front wheel drive vehicles), wheel bearings, servicing
Wheel bearings, servicing - disc brakes (front wheel drive vehicles)

Rear axle, servicing (four wheel drive vehicles)

Rear drive shafts, servicing
Reworking cap nut in side member (four wheel drive vehicles)

Suspension strut, disassembling and assembling (four wheel drive vehicles)

Wheel bearings, servicing - disc brakes (four wheel drive vehicles)

44 - Wheels, Tires, Wheel alignment

Vehicle alignment
Test requirements:
Vehicle alignment specifications (front wheel drive vehicles)
Vehicle alignment specifications (four wheel drive vehicles)
Front wheel camber, adjusting
Calculating the direction of travel:

45 - Anti-lock brake system

Anti-locking Brake System (ABS) and Anti-locking Brake System with Electronic Differential Lock (ABS/EDL) Teves 04
Notes for repair work on ABS, ABS/EDL
Control module, removing and installing
Wheel speed sensor and rotor for speed sensor, removing and installing

Anti-lock Brake System (ABS) and ABS with Electronic Differential Lock (ABS/EDL), Teves 20 GI
Safety precautions

ABS, ABS/EDL hydraulic unit, vacuum brake booster and brake master cylinder (Teves 20 GI), servicing
ABS hydraulic unit and ABS control module (Teves 20 GI), removing and installing
Brake hydraulic system, bleeding and filling

Assembly overview - hydraulic unit, brake servo/brake master cylinder
Hydraulic unit, removing and installing
Brake Pedal Position Sensor, removing and installing

46 - Brakes - Mechanical components

Front brakes, servicing (Girling caliper)
Brake pads, removing and installing

Front brakes, servicing (Teves/Ate)
Brake pads, removing and installing

Rear wheel brakes, servicing (drum brakes)
Brake shoe adjustment, releasing

Rear wheel brakes, servicing
Brake shoes, removing and installing
Parking brake, adjusting (drum brakes)

Rear wheel brakes, servicing (disc brakes)
Girling rear wheel disc brakes (front and four wheel drive vehicles)
Brake pads, removing and installing
Parking brake, adjusting (disc brakes)

Parking brake lever assembly overview
Brake pedal/brake servo, removing and installing
Brake pedal, removing and installing
Brake Light Switch, adjusting

47 - Brakes - Hydraulic components

Assembly overview: brake master cylinder/brake servo

Girling front brake caliper, servicing
Front brake caliper pistons, removing and installing

Front brake caliper, servicing (Teves/Ate)

Rear brake caliper, servicing
Rear brake caliper piston, removing and installing
Pre-bleeding brake caliper

Brake pressure regulator, checking and adjusting
Vehicles without ABS, vehicles with ABS, ABS/EDS, Teves 04
Load dependent brake pressure regulator specifications
Adjusting regulator

Brake system, bleeding
Brake system, bleeding (vehicles with and without ABS, ABS/EDL)
Brake system, bleeding (with pressure bleeder VAS 5234)
Brake system, bleeding (without pressure bleeder)

48 - Steering

Steering

Assembly overview: steering column, column tube, steering wheel and airbag steering wheel
Airbag unit, removing and installing
Airbag steering wheel, removing and installing
Airbag Spiral Spring, removing and installing
Column tube for height adjustable steering wheel, removing and installing
Pump delivery pressure, checking
Power steering gear, removing and installing
Assembly overview: power assisted steering box (TRW)
Power steering gear, adjusting (TRW)
Power steering gear, disassembling and reassembling (TRW)
Power steering gear, disassembling
Inner sealing ring for toothed rod, pulling out
Checking toothed rod for scoring
Sealing ring on toothed rod, replacing
Sealing rings, installing on toothed rod piston
Power steering gear, assembling
Inner sealing ring for toothed rod, installing
Toothed rod, installing in housing
Adhesive tape, applying
Power steering gear, adjusting with new toothed rod
Assembly overview: power steering gear (ZF)
Power steering gear, adjusting (ZF)
Power steering gear, disassembling and reassembling (ZF)
Power steering gear, disassembling
Checking toothed rod for scoring
Sealing ring on toothed rod, replacing
Power steering gear, assembling
Tie rods, removing and installing (power steering gear - TRW and ZF)
Left-hand tie rod length, checking and adjusting
Assembly overview: vane pump, reservoir and hydraulic lines (vehicles with 4-Cyl. engines)
Assembly overview: Hydraulic lines, reservoir (vehicles with 4-Cyl. engines)
Power steering vane pump, removing and installing (vehicles with 4-Cyl. engines)
V-belts, tensioning (4-Cyl. engines)
Assembly overview: Pressure and cooling lines (vehicles with VR6 engine)
Power steering vane pump, removing and installing (vehicles with VR6 engine

Suspension, Wheels, Brakes, Steering

Technical data

Model		Sedan/Wagon and syncro Base Suspension [1]	Sedan/Wagon and syncro Base Suspension [2]
Wheelbase	mm	2625	2625
Track, unladen	mm	1479 front, wheel offset 38 1422 rear, wheel offset 38 1485 front, wheel offset 35 1428 rear, wheel offset 35 1489 front, wheel offset 33 [3] 1432 rear, wheel offset [3]	1485 front, wheel offset 35 1441 rear, wheel offset 35 1489 front, wheel offset 33 [3] 1445 rear, wheel offset 33 [3]
Turning circle	m	10.7	11.5
Steering roll radius (negative)	mm	0.5 with offset 35 3.5 with offset 38	12 with offset 35 15 with offset 38
Wheel lock angle	inner outer	42° 36°	37° 45 34° 30

[1] Base Suspension, explanation ⇒ Page 40-1

[2] Plus Suspension, explanation ⇒ Page 40-26

[3] Syncro

Steering

Model	Sedan/Wagon and syncro	
Suspension version	**Base Suspension**	**Plus Suspension**
Steering gear	Power assisted steering gear	Power assisted steering gear
Steering wheel turns from lock to lock	3.33	3.14
Overall steering ratio	17.5:1	16.4:1
Wheel alignment specifications ⇒ Page 44-2		

Brakes

Model		Sedan/Wagon
Output	kW (hp)	55 (75)
Brake master cylinder	mm dia.	22.2 (Vehicles with ABS: 23.81)
Brake servo	dia. in inches	10
Front brake caliper, piston diameter	mm	54
Front brake disc	mm dia.	256
Front brake disc, thickness	mm	13
Pad thickness	mm	14
Rear brake drum	mm dia.	230
Wheel cylinder	mm dia.	20.64
Lining thickness	mm	5
Lining width	mm	40

00-4

Model		**Sedan/Wagon**	
Output	kW (hp)	85 (115)	128 (172)
Brake master cylinder	mm dia.	23.81	
Brake servo	dia. in inches	10	
Front brake caliper dia.	mm	54	
Front brake disc	mm dia.	256	288
Front brake thickness	mm	20	13
Pad thickness	mm	11	14
Rear brake caliper dia.	mm	38	
Rear brake disc	mm dia.	226	
Rear brake disc, thickness	mm	10	
Pad thickness	mm	12	

Model		**Passat syncro**	
Output	kW (hp)	85 (115)	128 (172)
Brake master cylinder	mm dia.	23.81	
Brake servo	dia. in inches	10	
Front brake caliper dia.	mm	54	
Front brake disc	mm dia.	256	288
Front brake disc thickness	mm	20	25
Pad thickness	mm	11	14
Rear brake caliper dia.	mm	38	
Rear brake disc	mm dia.	239	
Rear brake disc, thickness	mm	10	
Pad thickness	mm	12	

Wheels, tires

Engine output (kW)	Model	Tire size [1]	Wheel	Offset	Hole pattern
55 gas	Sedan/Wagon	185/65 R 14 86 S	6 J x 14	38	4-hole
55, 66 - Diesel		195/60 R 14 86 S	6 J x 14	38	
		205/50 R 15 86 S	6 J x 15	38	
		185/65 R 14 85 Q (M+S)	6 J x 14	38	
		195/60 R 14 85 Q (M+S)	6 J x 14	38	
		205/50 R 15 85 Q (M+S)	6 J x 15	38	
55	Sedan/Wagon	T 125/70 R 15 95 M (Temp. spare)	3 $^{1}/_{2}$ J x 15	40	

[1] Tire pressures ⇒ Sticker on vehicle

Engine output (kW)	Model	Tire size [1]	Wheel	Offset	Hole pattern
85 kW	Sedan/Wagon	185/65 R 14 86 H	6 J x 14	38	4-hole
		195/60 R 14 86 H	6 J x 14	38	
		205/50 R 15 86 H	6 J x 15	35	
		185/65 R 14 85 Q (M+S)	6 J x 14	38	
		195/60 R 14 85 Q (M+S)	6 J x 14	38	
		205/50 R 15 85 Q (M+S)	6 J x 15	35	
85 kW	Sedan/Wagon	T 125/70 R 15 95 M (Temp. spare)	3 $^1/_2$ J x 15	40	
128 kW	Sedan/Wagon	205/50 ZR 15 86 W	6 J x 15	35	
		195/55 R 15 85 T (M+S)	6 J x 15	35	
		195/55 R 15 85 T (M+S)	6 $^1/_2$ J x 15	33	
		205/50 R 15 85 T (M+S)	6 J x 15	35	
128 kW	Sedan/Wagon	T 125/70 R 16 95 M (Temp. spare)	3 $^1/_2$ J x 16	38	

[1] Tire pressures ⇒ Sticker on vehicle

Engine output (kW)	Model	Tire size [1]	Wheel	Offset	Hole pattern
85 kW	Sedan/Wagon syncro	185/65 R 14 86 H 195/60 R 14 86 H 205/50 R 15 86 H 185/65 R 14 86 Q (M+S) 195/60 R 14 86 Q (M+S) 205/50 R 15 86 Q (M+S)	6 J x 14 6 J x 14 6 J x 15 6 J x 14 6 J x 14 6 J x 15	38 38 35 38 38 35	4-hole
85 kW	Sedan/Wagon syncro	T 125/80 R 15 95 M (Temp. spare)	3 1/2 J x 15	40	
128 kW	Sedan/Wagon syncro	205/50 ZR 15 86 W 205/50 R 15 86 (M+S)	6 J x 15 6 J x 15	35 35	5-hole
128 kW	Sedan/Wagon syncro	T 125/70 R 16 95 M (Temp. spare)	3 1/2 J x 16	38	

[1] Tire pressures ⇒ Sticker on vehicle

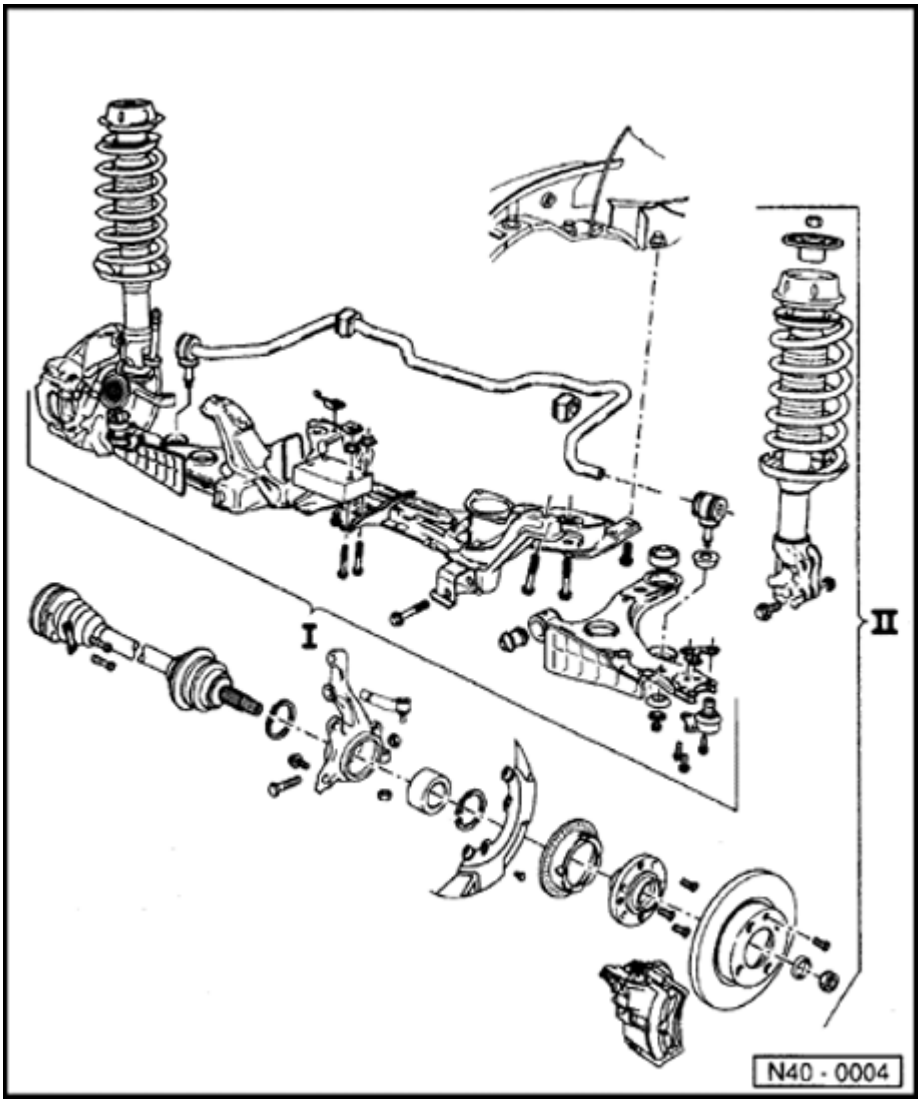

Front Wheel Suspension, Shafts and Axle

Front suspension, servicing (Base suspension)

I - Removing and installing subframe, stabilizer bar and control arm (Base suspension) ⇒ Page 40-2

II - Removing and installing wheel bearings, suspension strut and drive shaft (Base suspension) ⇒ Page 40-14

The Base suspension is installed in Passat 1995 vehicles up to 85 kW.

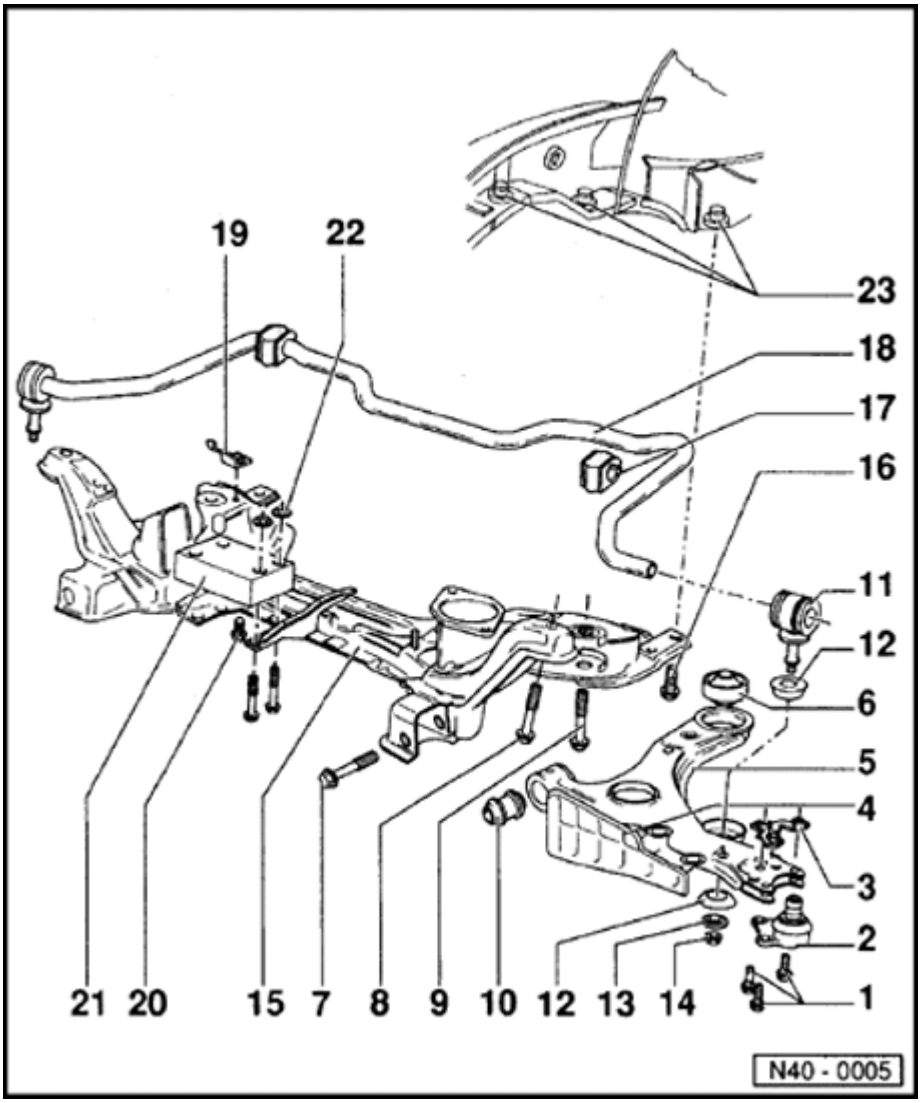

Sub-frame, stabilizer bar and control arm (Base suspension)

Note:

- *If a vehicle has to be moved after removing the drive shaft, first install outer joint and tighten to 50 Nm (37 ft lb) otherwise the wheel bearing will be damaged.*
- *Specifications for wheel alignment ⇒ Page 44-2 .*
- *Welding and straightening operations are not permitted on load bearing suspension components or those components which locate the wheels.*
- *Always replace self-locking nuts.*
- *Always replace corroded nuts/bolts.*

40-3

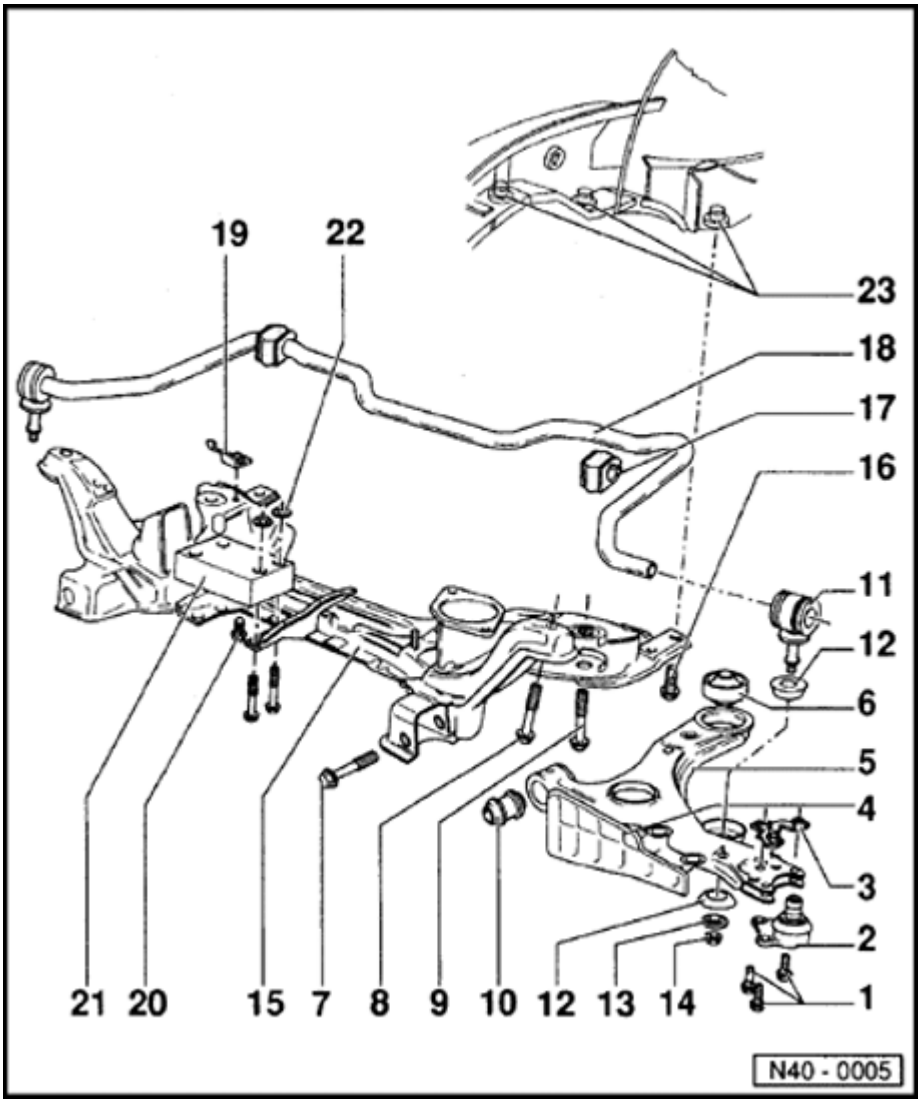

1 - Hex bolt, 35 Nm (26 ft lb)

2 - Ball joint

- Checking ⇒ Page 40-10
- Check rubber boot for damage and if necessary, replace ball joint
- Mark installation position. If replaced set to center of elongated hole and check toe
- Elongated holes are not for camber adjustment. Failure to observe this instruction may result in damage to drive shafts!

3 - Captive lock nuts

4 - Air deflector plate

- Secured to control arm by clip

5 - Control arm

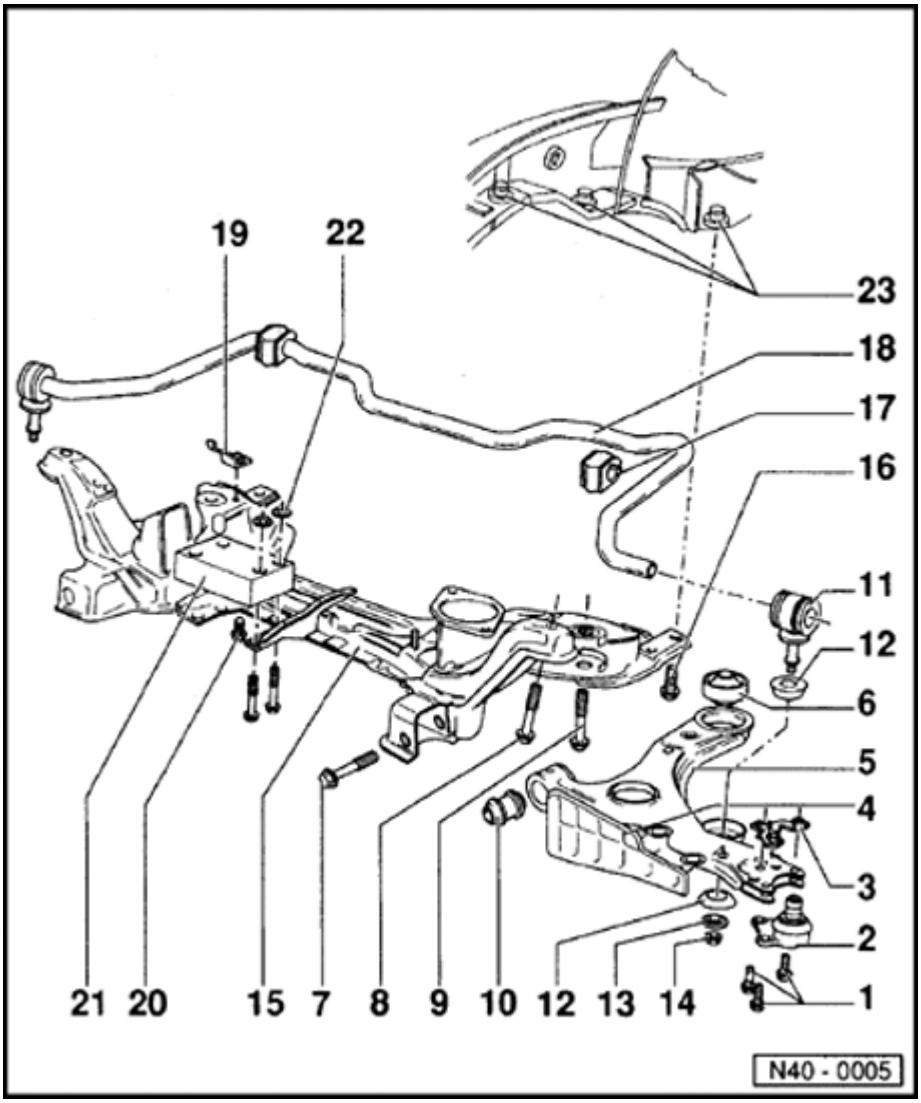

6 - Control arm rear mounting

- Installation position ⇒ Fig. 3
- Pressing out and in ⇒ Fig. 4

7 - Hex bolt M 12 x 1.5 x 82

- 50 Nm (37 ft lb) and turn 90° further

8 - Hex bolt M 12 x 1.5 x 65

- 70 Nm (52 ft lb) and turn 90° further

9 - Hex bolt M 12 x 1.5 x 78

- 70 Nm (52 ft lb) and turn 90° further

10 - Control arm front mounting

- Pressing out ⇒ Fig. 1
- Pressing in ⇒ Fig. 2

11 - Connecting link

- With rubber mounting

40-5

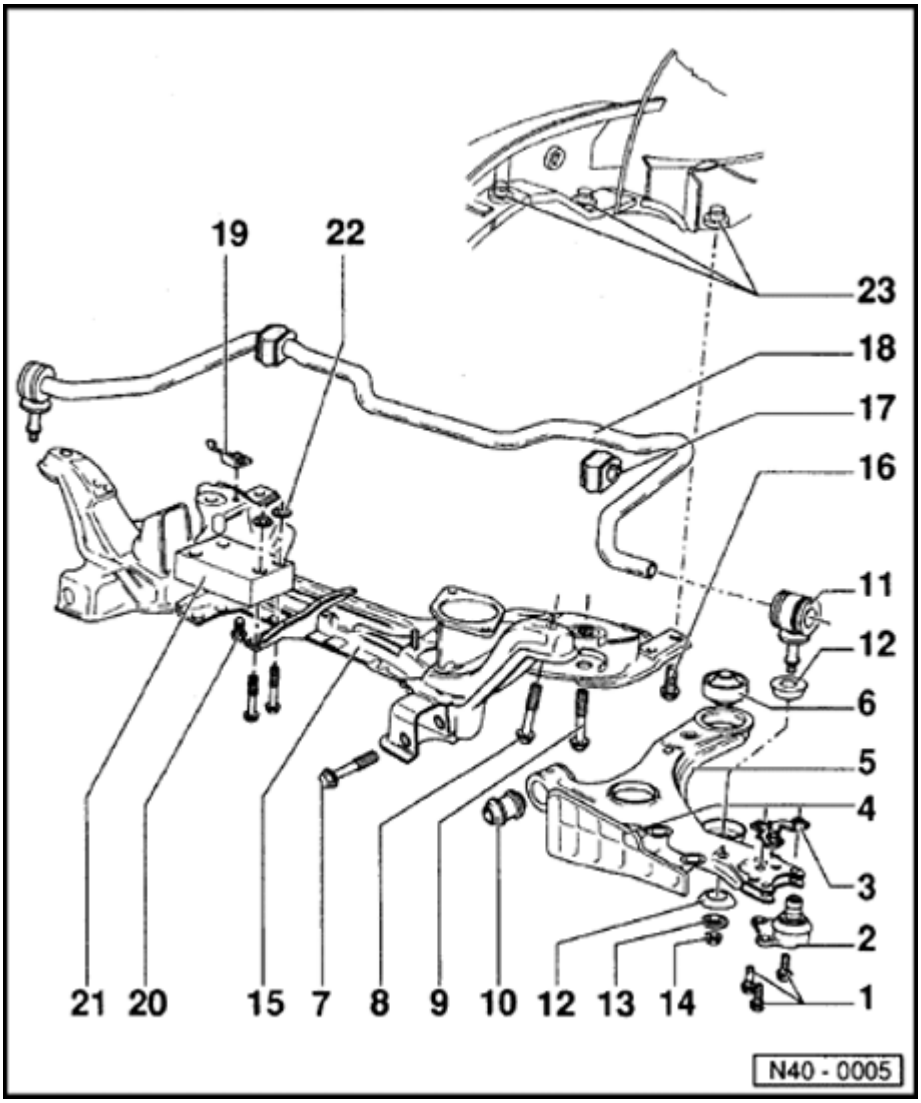

12 - Connecting link mounting

- Conical side toward control arm

13 - Washer

- Collar faces away from mounting

14 - Self-locking hex nut, 25 Nm (18 ft lb)

15 - Sub-frame

- Removing and installing with assemblies installed: supporting assemblies ⇒ Fig. 5
- Remove sub-frame from below with VAG 1383 (with control arm but without steering gear). After installing check position of steering wheel and align front end.
- Aligning engine-transmission assembly

Repair Manual, Engine Mechanical, Repair Group 10

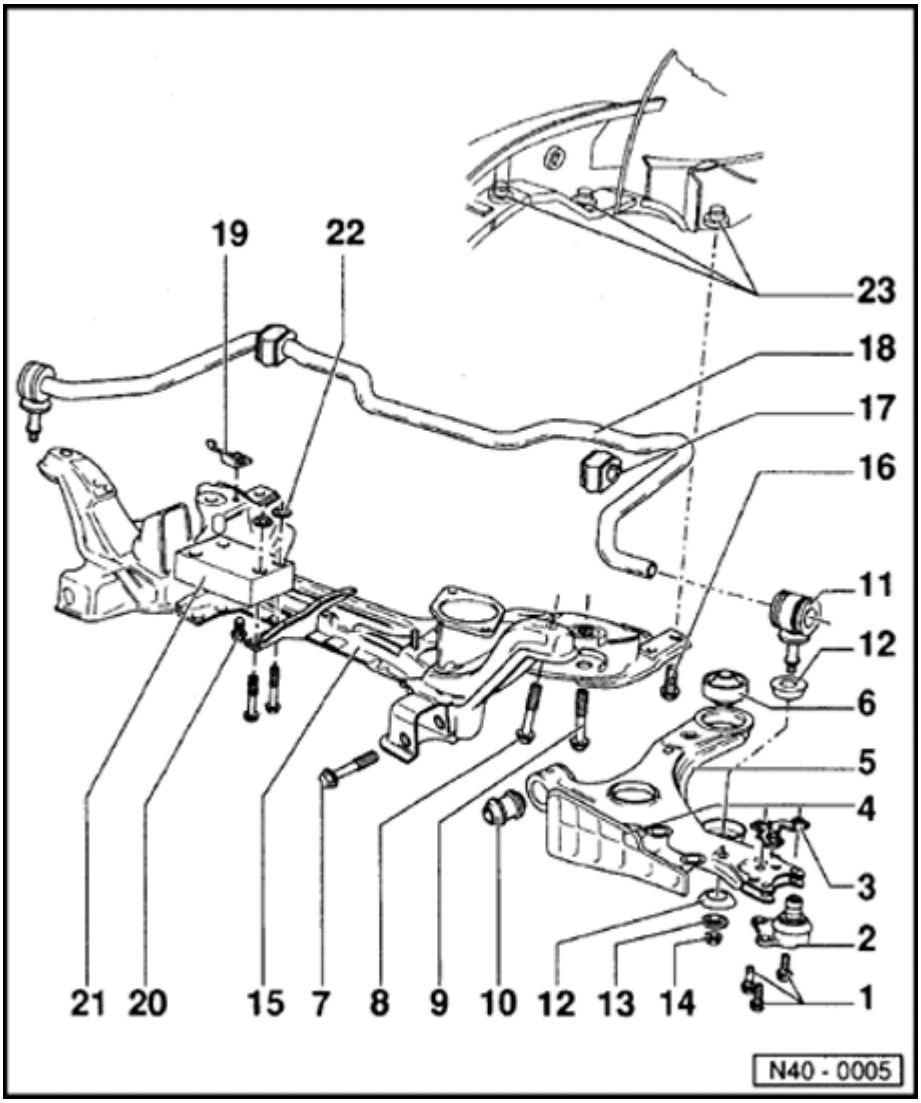

16 - Hex bolt, 65 Nm (48 ft lb)

17 - Stabilizer bar mounting

18 - Stabilizer bar

19 - Stabilizer bar clamp

20 - Hex bolt, 25 Nm (18 ft lb)

- To secure stabilizer bar

21 - Vibration damper

- Note installation position, large part must protrude from sub-frame

22 - Self-locking hex nut, 25 Nm (18 ft lb)

23 - Cap nut

- Repairing in side member ⇒ Page 40-11

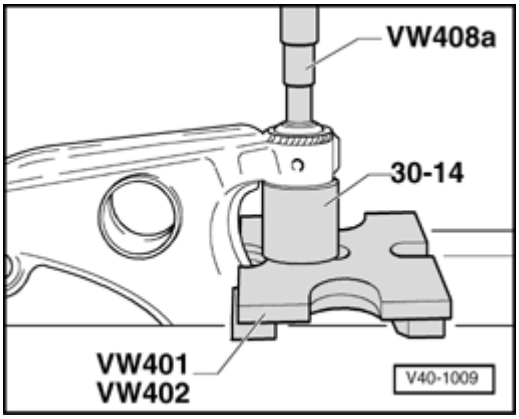

Fig. 1 Front control arm mounting, pressing out

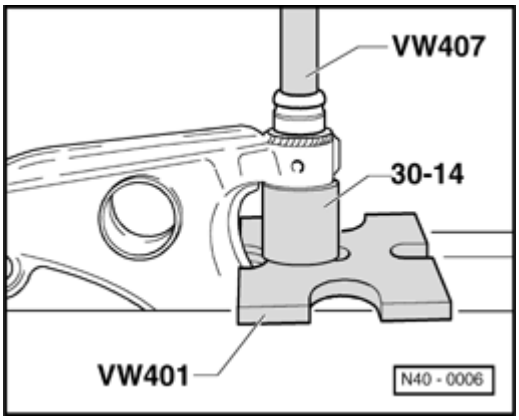

Fig. 2 Front control arm mounting, pressing in

Note:

Before pressing in, coat with acid-free lubricant, e.g. soft soap.

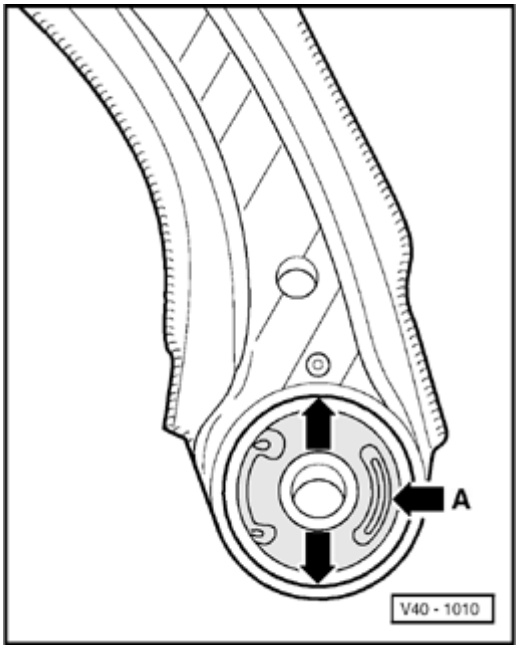

Fig. 3 Control arm rear mounting, installation position

One of the embossed arrows points toward the recess in the control arm and the kidney shaped opening (arrow A) faces towards center of vehicle.

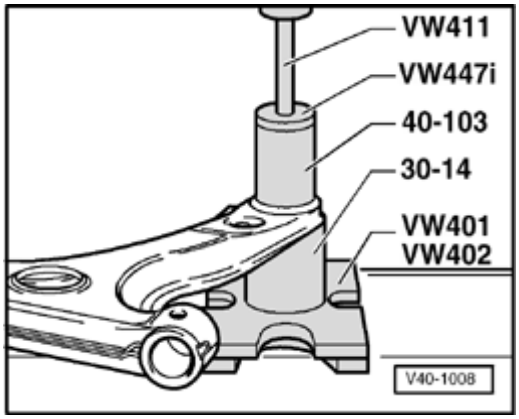

Fig. 4 Control arm rear mounting, pressing out and in

Note:

If bonded rubber bushing is tight because of corrosion, cut rubber out, saw through steel casing and drive bushing out.

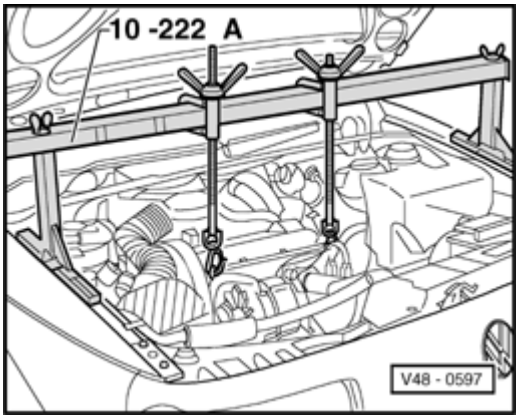

Fig. 5 Supporting engine/transmission assembly with 10-222 A and legs 10-222 A/1

Ball joint, checking (Base and Plus suspension)

Checking axial clearance

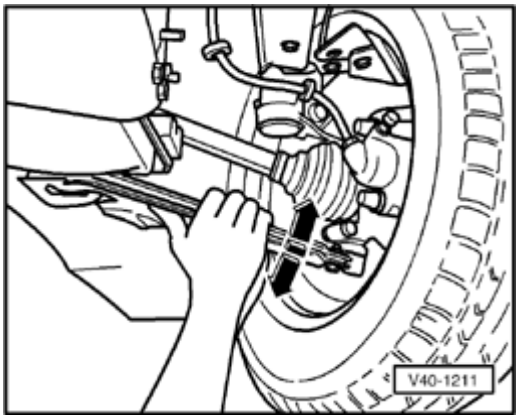

- Forcibly pull ball joint down and press up again.

Checking radial play

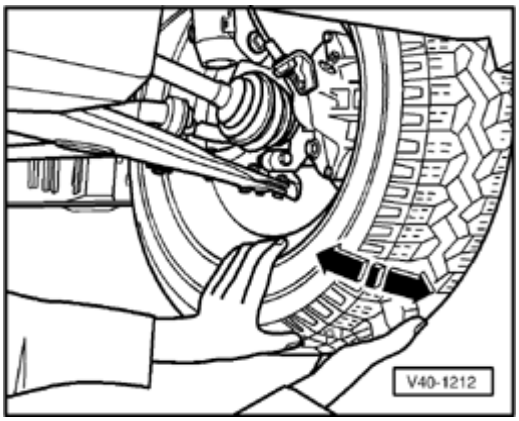

- Press lower part of wheel outward and inward.

Note:

- *There must be no perceptible or visual play during either test.*
- *Observe ball joint during checks.*
- *Take into account possible existing wheel bearing play or play in upper suspension strut mounting.*

Reworking cap nut in side member (Base and Plus suspension)

If the threads of the cap nut in the side member are damaged, the thread must either be retapped or the cap nut must be drilled out.

When drilling out proceed as follows.

- Support engine/transmission assembly with 10-222 A and legs 10-222 A/1.
- Remove the sub-frame.
- Drill out the damaged side member cap nut with a 10.2 mm diameter drill from underneath.

Note:

When drilling do not tilt the drill.

WARNING!

Wear protective goggles.

- Cut new M 12 x 1.5 thread in cap nut.
- Use a new bolt/washer assembly to secure sub-frame ⇒ Page 40-13 .

Bolt/washer assemblies for sub-frame

Securing point	Thread	Bolt	Part No.
Front sub-frame	M12 x 1.5	M12 x 1.5 x 95 10.9	N 101 612.01 [1)]
Rear sub-frame	M12 x 1.5	M12 x 1.5 x 95 10.9	N 101 612.01
Sub-frame bracket	M10	M10 x 38 10.9	N 019 541.1
Engine front cross-member to side member	M10	M10 x 75 10.9	N 904 078.01 [1)]

[1)] These bolts are not listed in the parts catalog. They must be specially ordered.

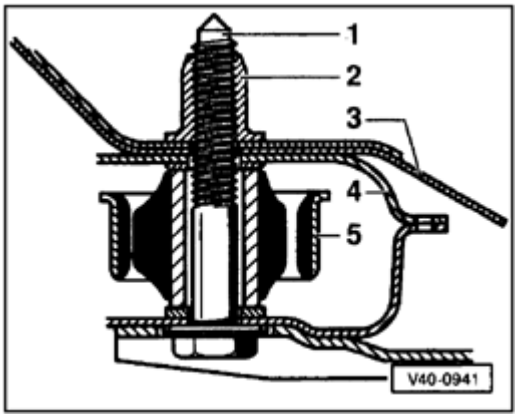

Note:

Tightening torque remains unchanged.

1 - Bolt/washer

2 - Cap nut

3 - Side member

4 - Sub-frame

5 - Bonded rubber mounting/control arm

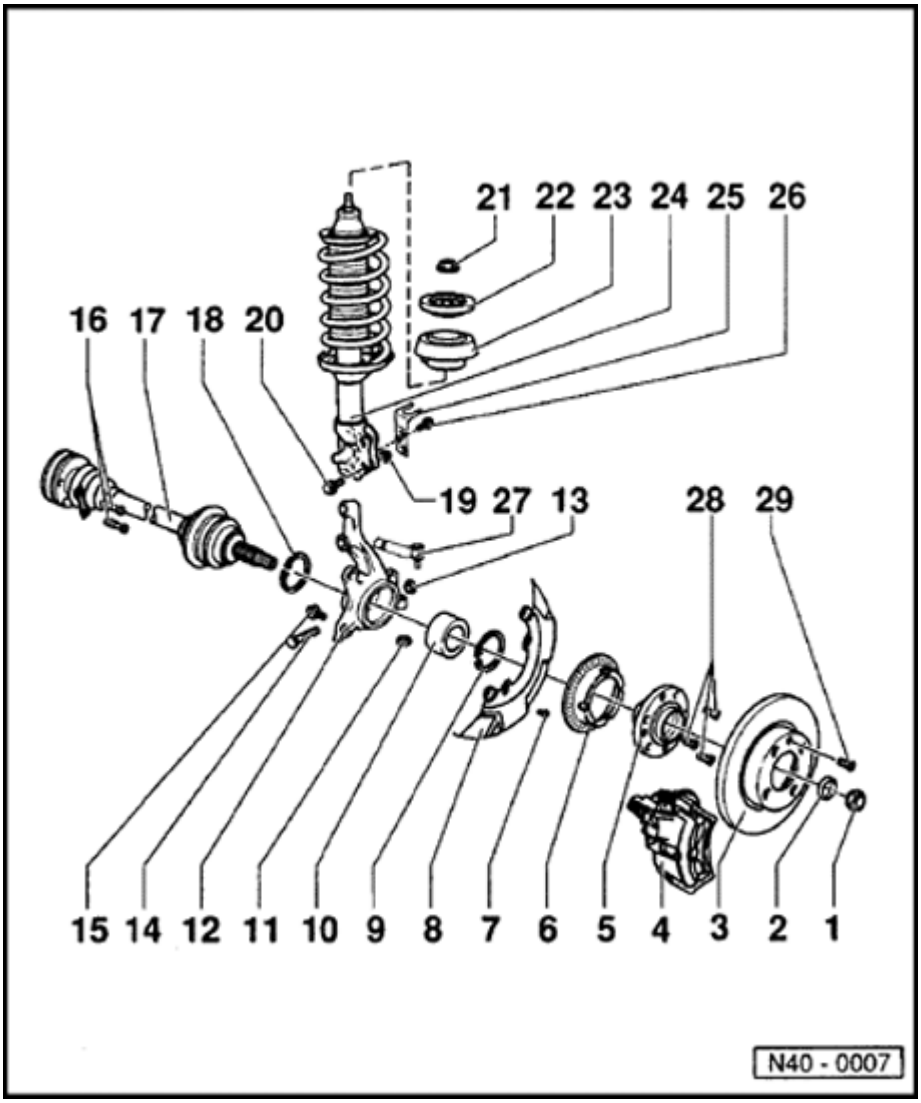

Wheel bearing, suspension strut and drive shaft, removing and installing (Base running gear)

Note:

- *If a vehicle has to be moved after removing the drive shaft, first install outer joint and tighten to 50 Nm (37 ft lb) otherwise the wheel bearing will be damaged.*
- *Welding and straightening operations are not permitted on load bearing suspension components or those components which locate the wheels.*
- *Always replace self-locking nuts.*
- *Always replace corroded nuts/bolts.*
- *Wheel bolt tightening torque: 110 Nm (81 ft lb).*

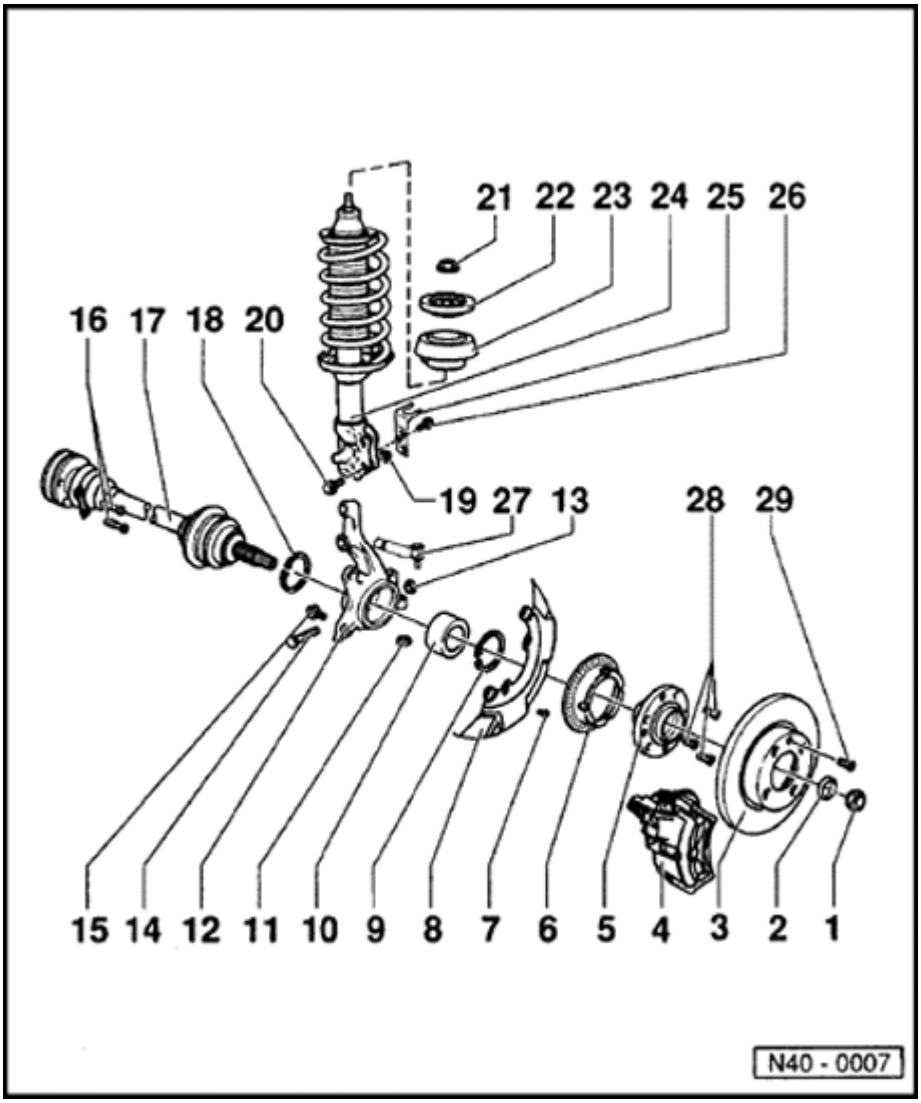

1 - Self-locking nut, 265 Nm (195 ft lb)

- Only loosen and tighten with the vehicle standing on its wheels (danger of accident)
- Any paint residue and/or corrosion on the thread of the outer joint must be removed before the nut is installed

2 - Washer

3 - Brake disc

- Application

⇒ *Repair Manual, Suspension, Wheels, Brakes, Steering, Repair Group 00*

4 - Brake caliper

- Do not loosen brake hose when working on front suspension
- Hang up with wire or similar

5 - Hub

- Pressing out ⇒ Fig. 3
- Pressing in ⇒ Fig. 8
- Pulling off bearing inner race ⇒ Fig. 5

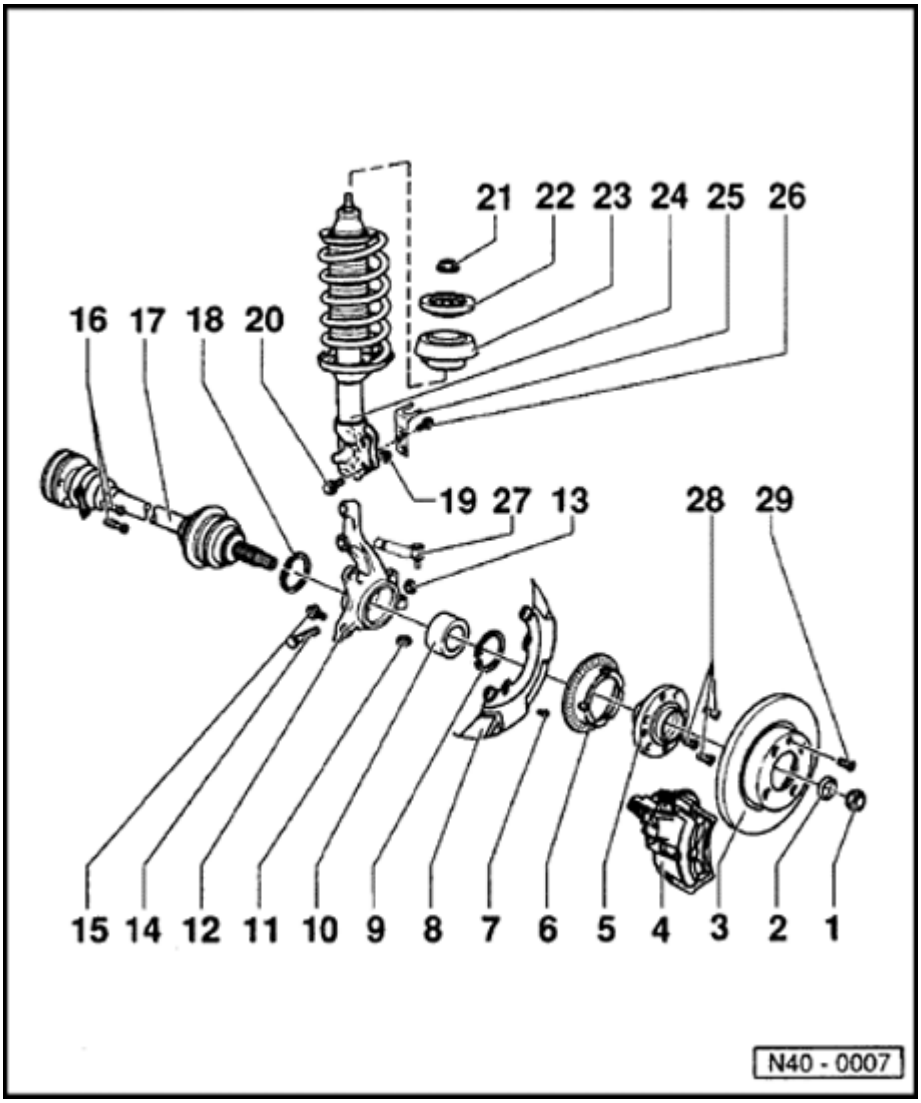

6 - Speed sensor rotor

- Only on vehicles with ABS

7 - Hex bolt, 10 Nm (7 ft lb)

8 - Splash plate

9 - Circlip

- Ensure correctly seated

10 - Wheel bearing

- Pressing out ⇒ Fig. 6
- Replace, as it is destroyed during pressing out
- Pressing in ⇒ Fig. 7

11 - Self-locking hex nut, 35 Nm (26 ft lb)

12 - Wheel bearing housing

13 - Self-locking hex nut, 50 Nm (37 ft lb)

14 - Hex bolt

- Clamping bolt for ball joint

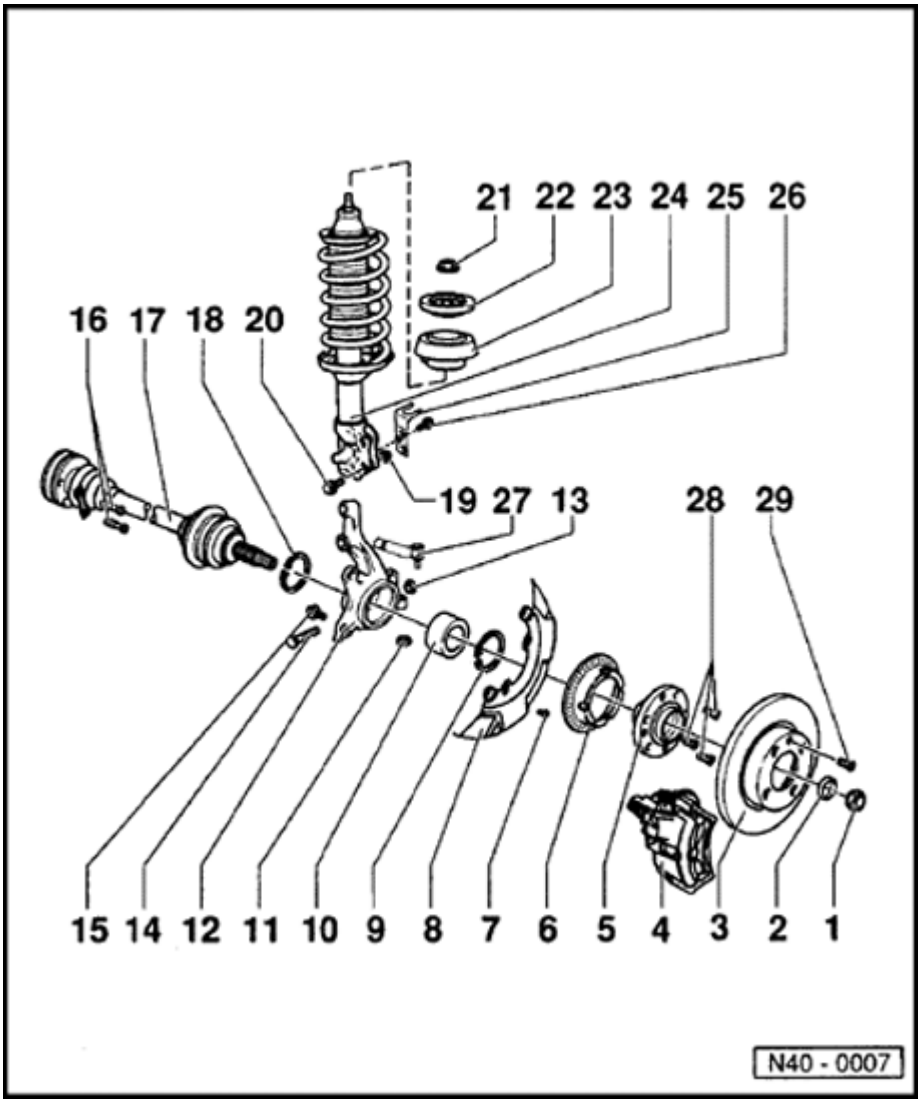

15 - Self-locking bolt/washer assembly, 125 Nm (92 ft lb)

- For securing brake carrier

16 - Socket head multi-point bolt, 45 Nm (33 ft lb)

17 - Drive shaft

- To remove and install separate ball joint/control arm connection ⇒ Fig. 2
- Repairing ⇒ Page 40-46

18 - Circlip

- Ensure correctly seated

19 - Self-locking hex nut, 95 Nm (70 ft lb)

20 - Hex bolt

- Shank diameter 11 mm
- Adjusting camber ⇒ Page 44-6
- Mark position before loosening

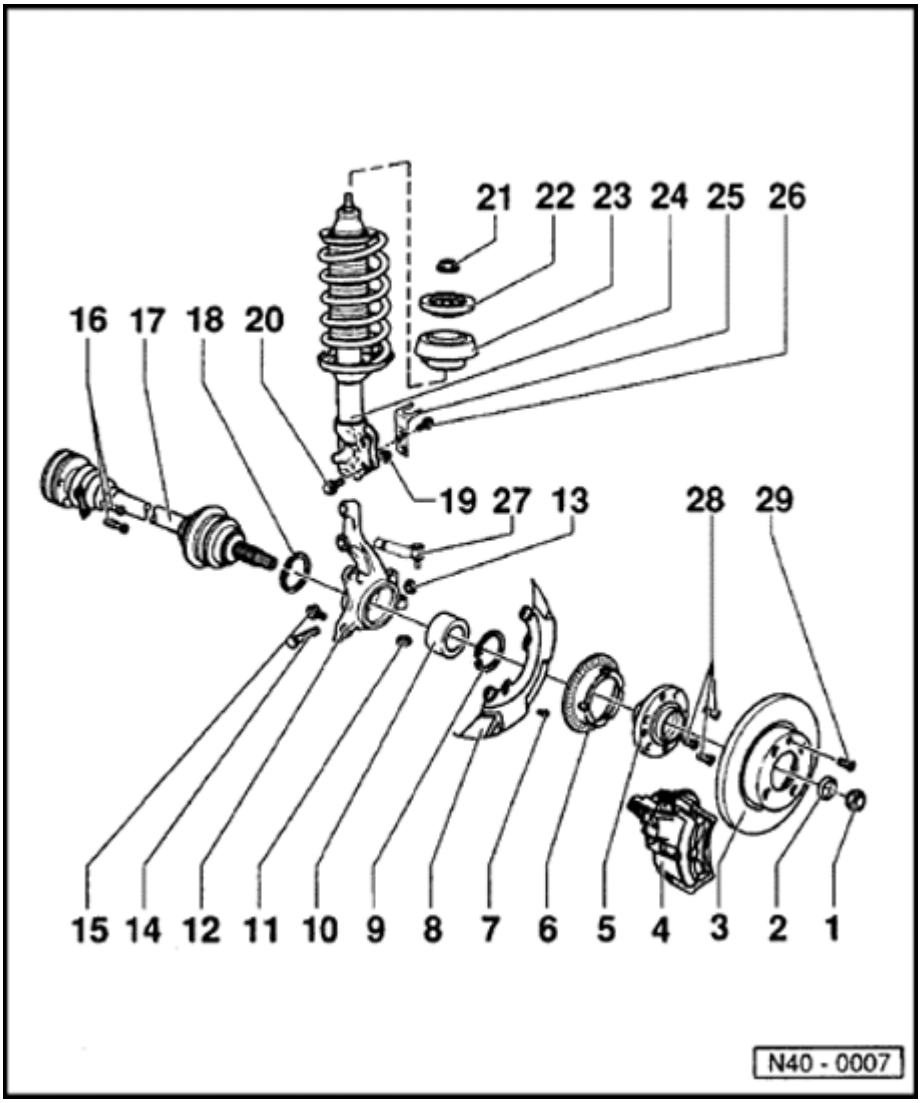

21 - Self-locking hex nut, 60 Nm (44 ft lb)

- Loosening and tightening ⇒ Fig. 1

22 - Stop

23 - Suspension strut bearing

24 - Suspension strut

- Removing and installing ⇒ Fig. 1 and ⇒ Fig. 2
- Disassembling and assembling ⇒ Page 40-23

25 - Bracket

26 - Hex bolt

27 - Tie rod

- Removing and installing ⇒ Page 48-77

28 - Countersunk screw

29 - Screw

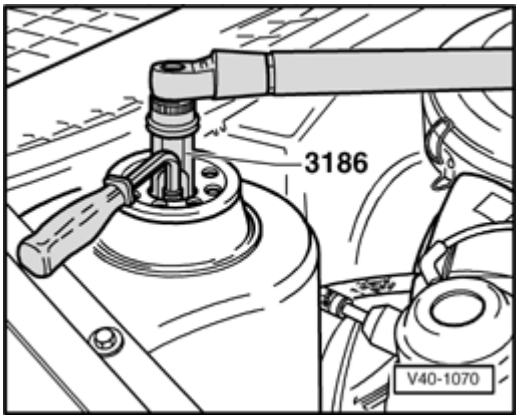

Fig. 1 Suspension strut to body, loosening and tightening

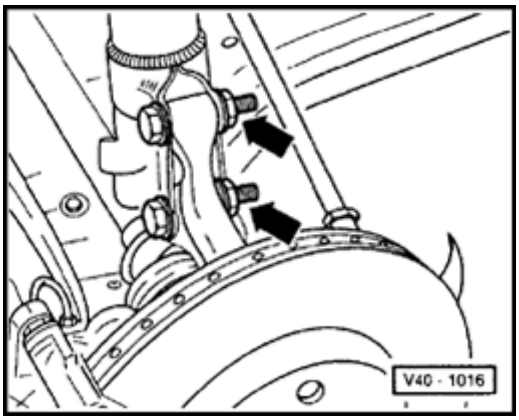

Fig. 2 Wheel bearing housing/suspension strut joint, separating

Note:

Camber must be adjusted each time joint is loosened.

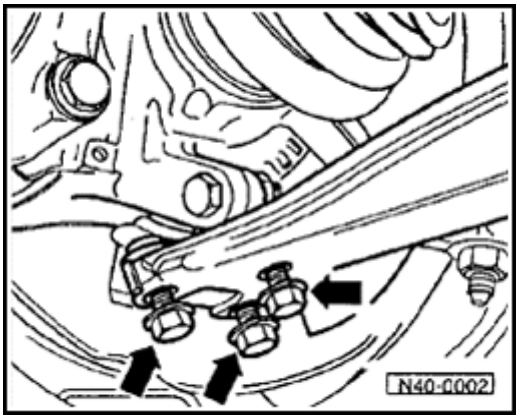

Fig. 3 Ball joint/control arm connection, separating

To take drive shaft out, remove bolts (arrows).

Note:

First mark installation position.

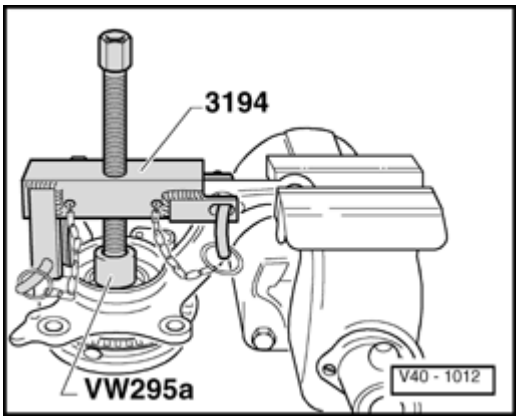

Fig. 4 Hub, pressing out of wheel bearing housing

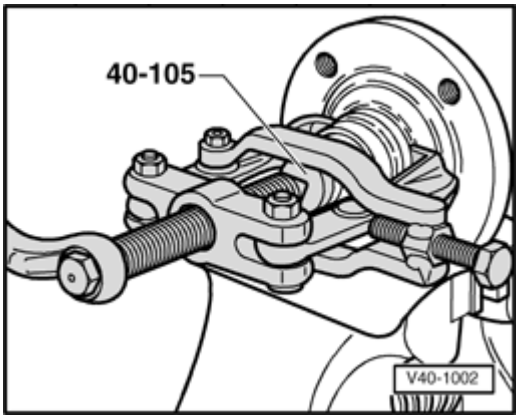

Fig. 5 Bearing race, pulling out of hub

Only use puller with leg clamp e.g. Kukko 204-2 (commercial type).

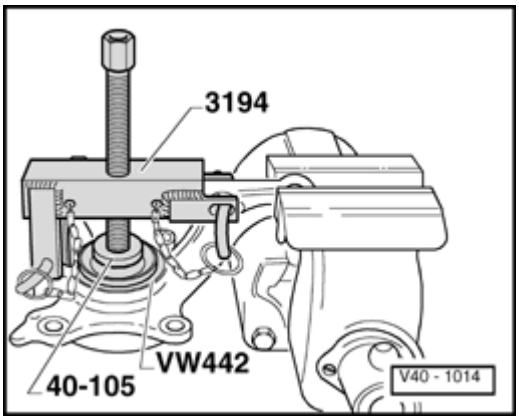

Fig. 6 Wheel bearing, pressing out of wheel bearing housing

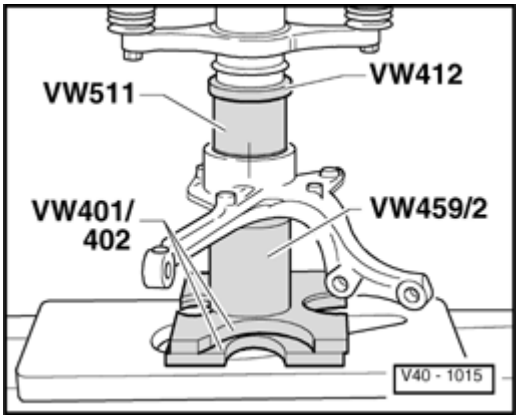

Fig. 7 Wheel bearing, pressing into wheel bearing housing

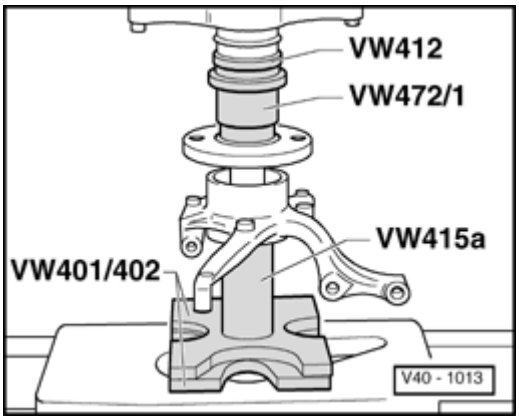

Fig. 8 Hub, pressing into wheel bearing housing

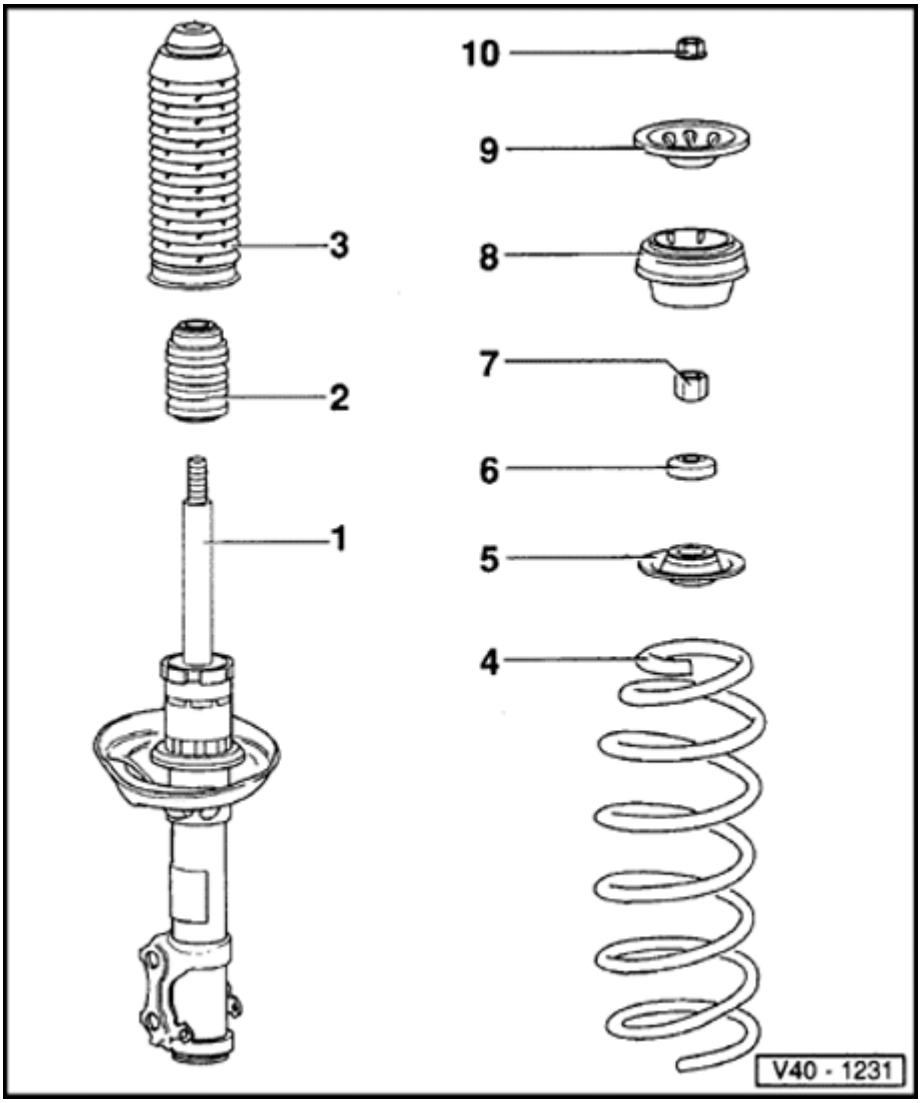

Front suspension strut, servicing (Base and Plus suspension)

1 - Shock absorber

- Can be replaced individually
- Check shock absorber for leaks and noises
- After replacing, adjust camber and toe ⇒ Page 44-1

2 - Buffer stop

3 - Protective sleeve

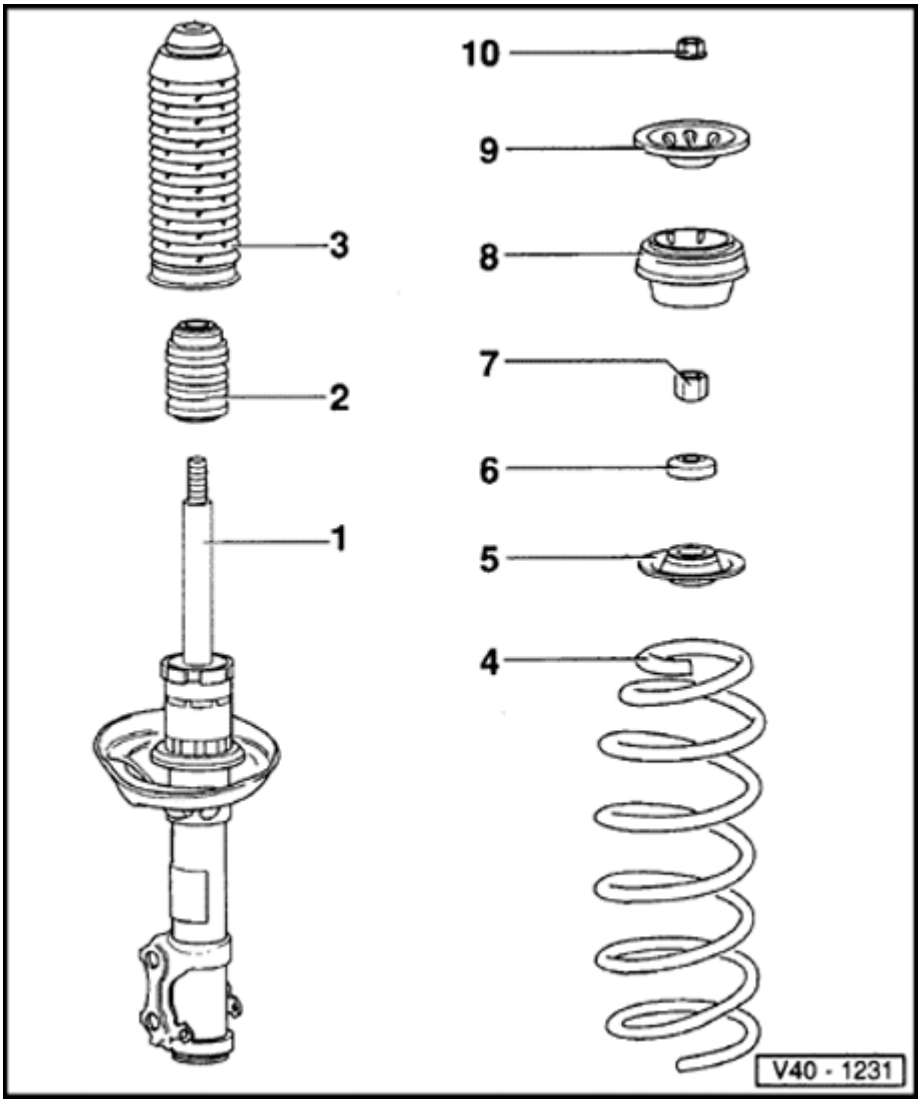

4 - Coil spring

- Removing and installing ⇒ Fig. 2
- Observe color coding
- Outer surface of spring must not be damaged
- Is slightly curved

5 - Spring plate

6 - Axial bearing

7 - Hex nut, 60 Nm (44 ft lb)

- Loosening and tightening ⇒ Fig. 2

8 - Suspension strut mounting

9 - Stop

10 - Self-locking hex nut, 60 Nm (44 ft lb)

- Loosening and tightening ⇒ Fig. 1

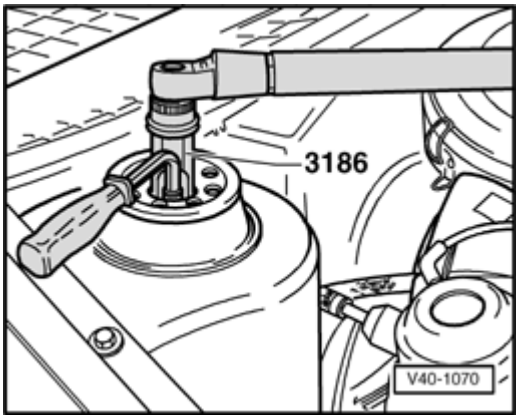

Fig. 1 Hex nut, loosening and tightening

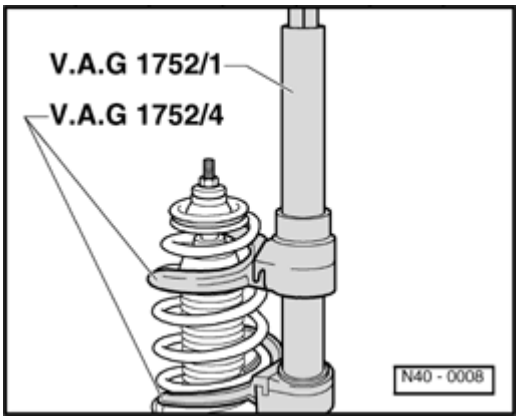

Fig. 2 Spring, removing and installing

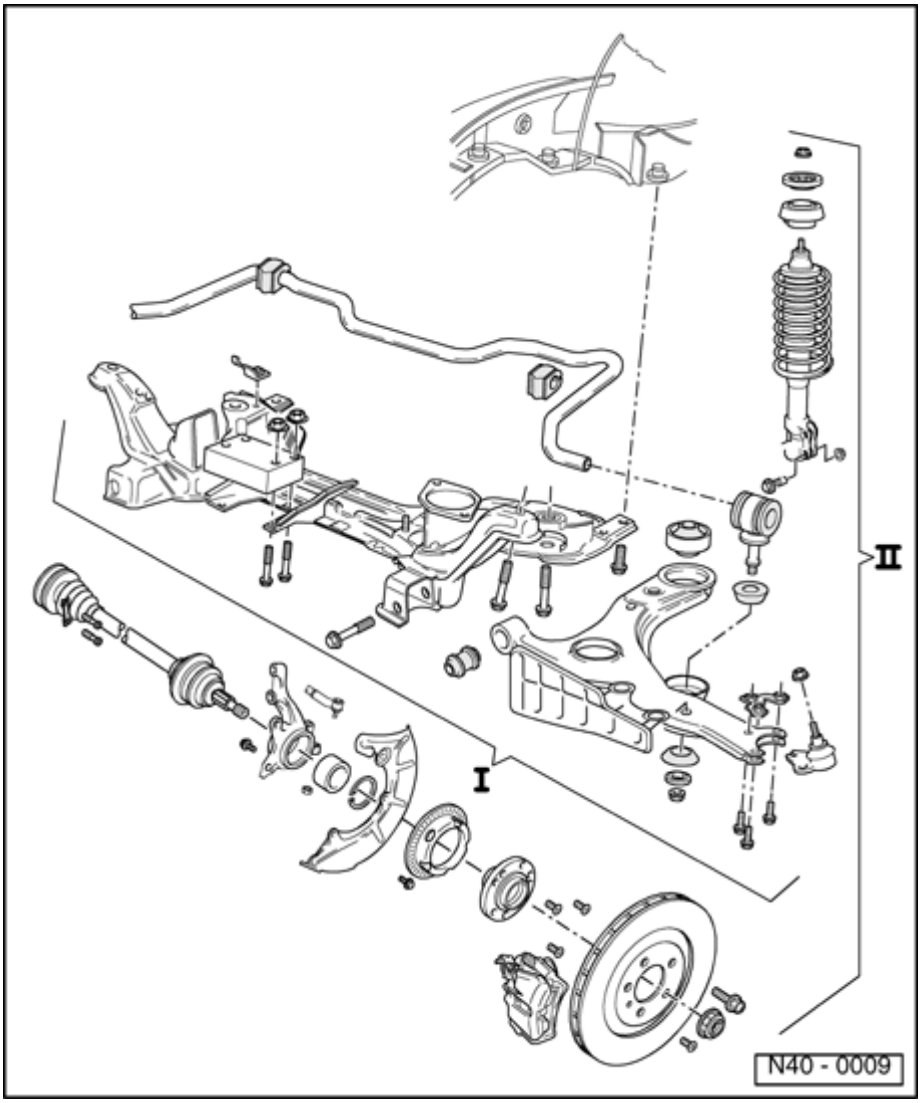

Front suspension, servicing (Plus suspension)

I - Removing and installing subframe, stabilizer bar and control arm (plus suspension) ⇒ Page 40-27

II - Removing and installing wheel bearing, suspension strut and drive shaft (plus suspension) ⇒ Page 40-36

The following components are different when comparing the plus suspension with the base suspension:

Control arm, ball joint, wheel bearing housing, stabilizer bar, drive shaft, brake disc, hub, wheel and tie rods.

The Plus suspension is installed in Passat models with engine output 110 kW (148 hp) and above.

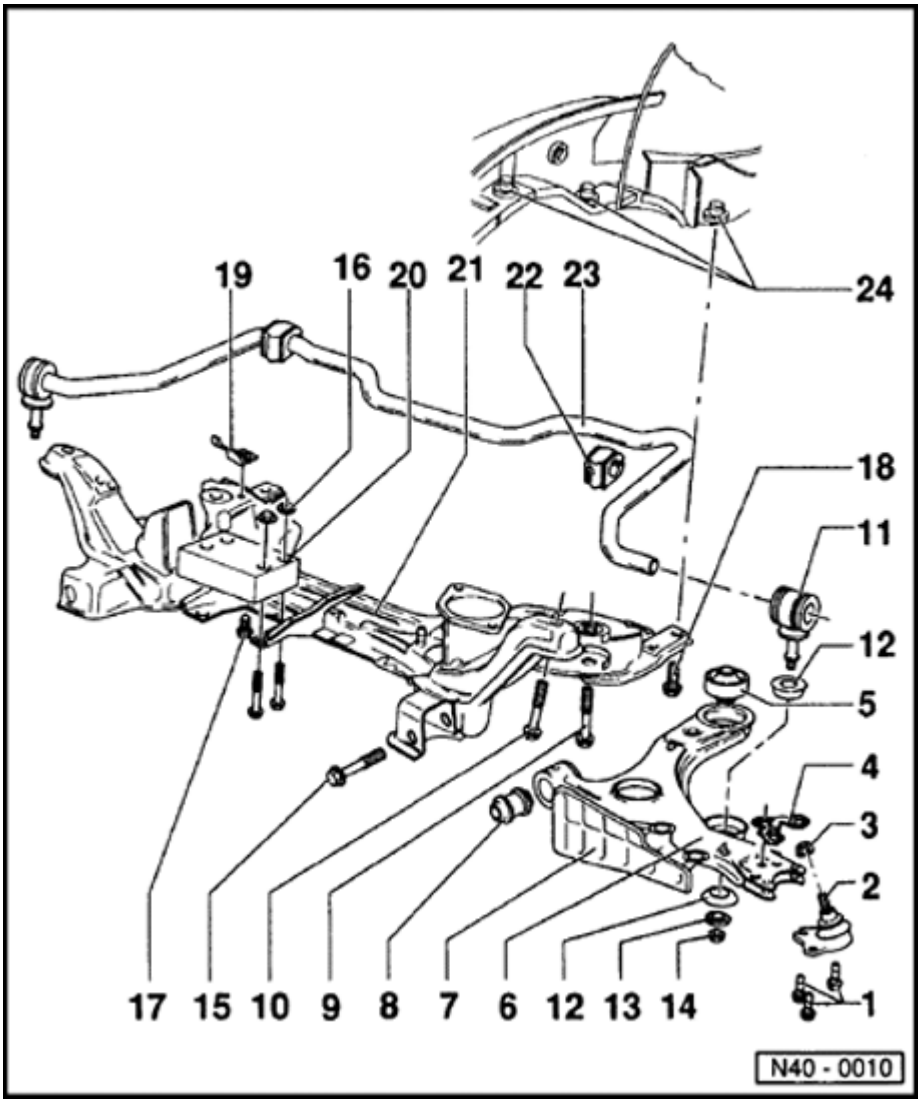

Sub-frame, stabilizer bar and control arm, removing and installing (Plus suspension)

Notes ⇒ Page 40-2

1 - Hex bolt, 35 Nm (26 ft lb)

2 - Ball joint

- Checking ⇒ Page 40-10
- Check rubber boot for damage and if necessary, replace ball joint
- Removing and installing ⇒ Page 40-33
- Mark installation position. If replaced set to center of elongated hole and check track

3 - Self-locking hex nut, 45 Nm (33 ft lb)

4 - Captive locknuts

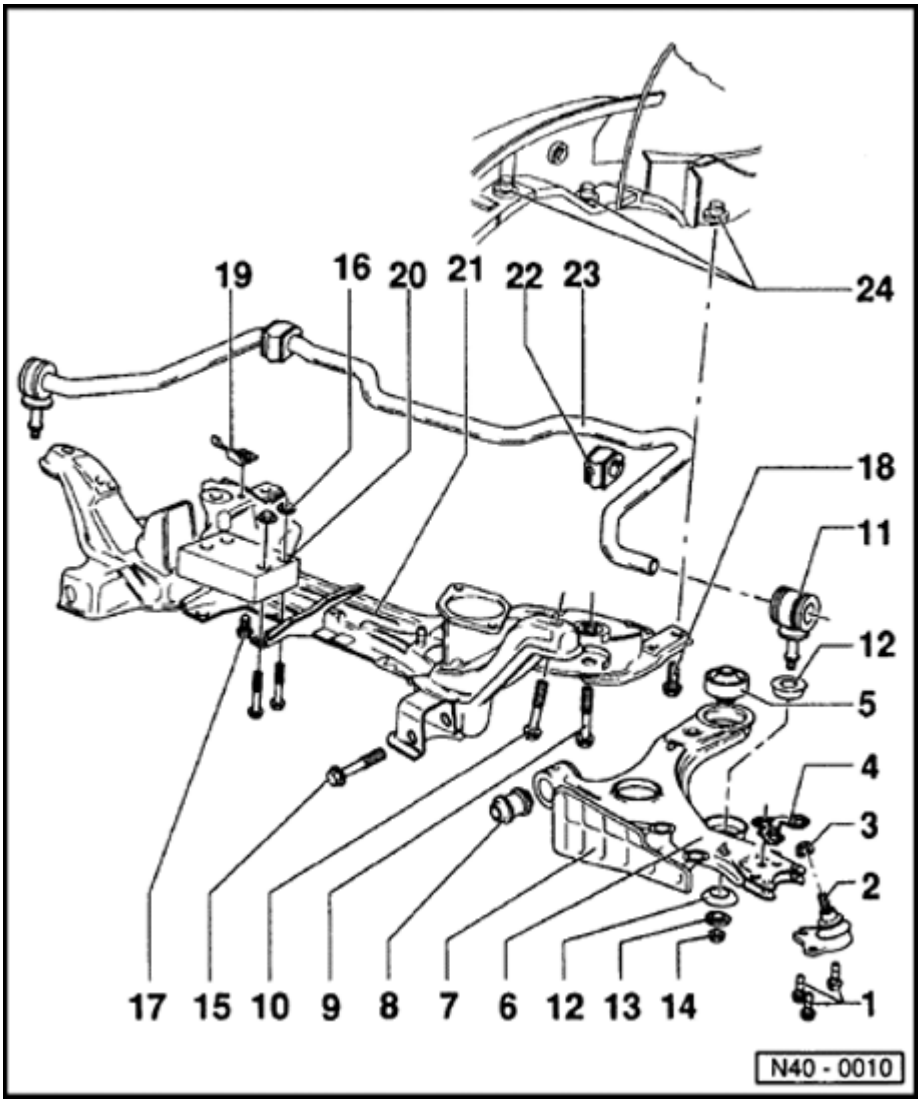

5 - Control arm rear mounting

- Installation position ⇒ Fig. 2
- Pressing out and in ⇒ Fig. 3

6 - Control arm

- Elongated holes are not for camber adjustment!

7 - Air guide plate

- Secured to control arm by clip

8 - Control arm front mounting

- Pressing out and in ⇒ Fig. 1

9 - Hex bolt M 12 x 1.5 x 78

- 70 Nm (52 ft lb) and turn 90° further

10 - Hex bolt M 12 x 1.5 x 65

- 70 Nm (62 ft lb) and turn 90° further

11 - Connecting link

- With rubber mounting

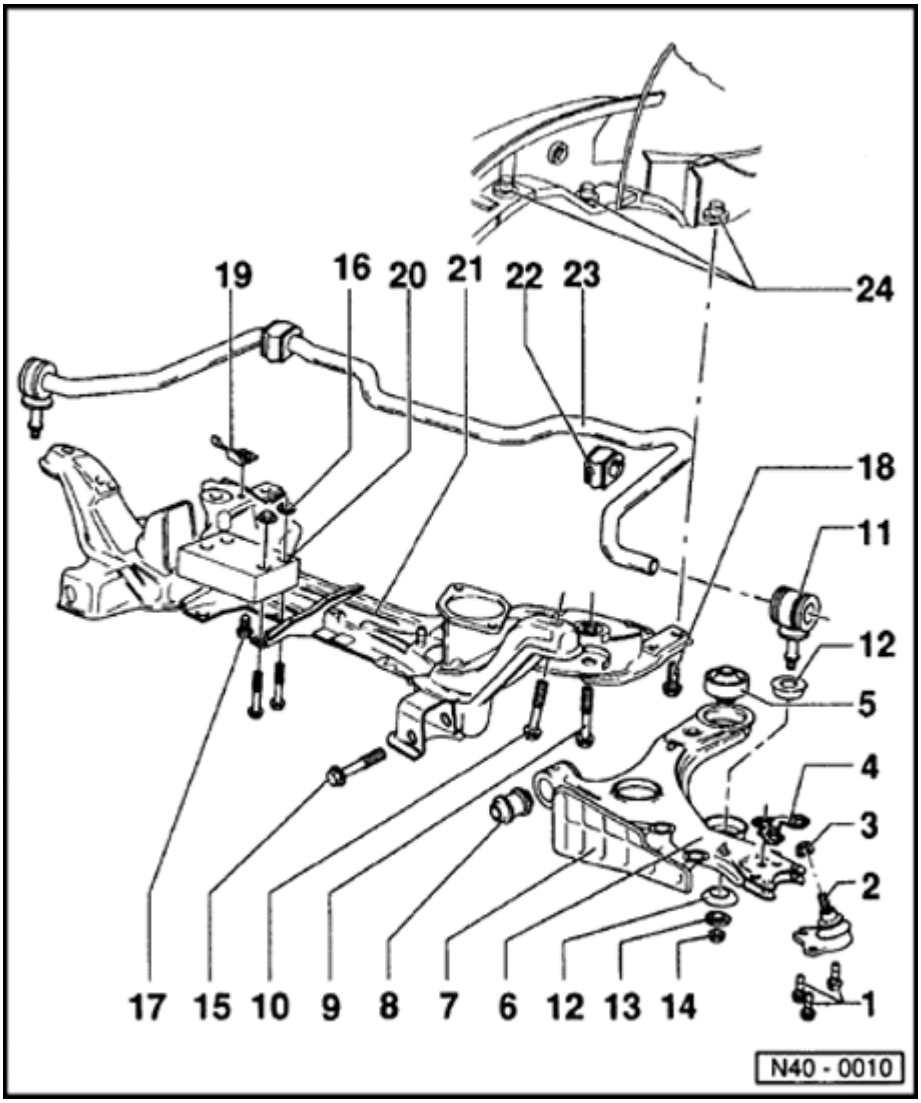

12 - Mounting for connecting link

- Conical side towards control arm

13 - Washer

- Collar faces away from mounting

14 - Self-locking hex nut, 25 Nm (18 ft lb)

15 - Hex bolt M 12 x 1.5 x 82

- 50 Nm (37 ft lb) and turn 90° further

16 - 25 Nm (18 ft lb)

17 - Hex bolt, 25 Nm (18 ft lb)

- To secure stabilizer bar

18 - Hex bolt, 65 Nm (48 ft lb)

19 - Clamp for stabilizer bar

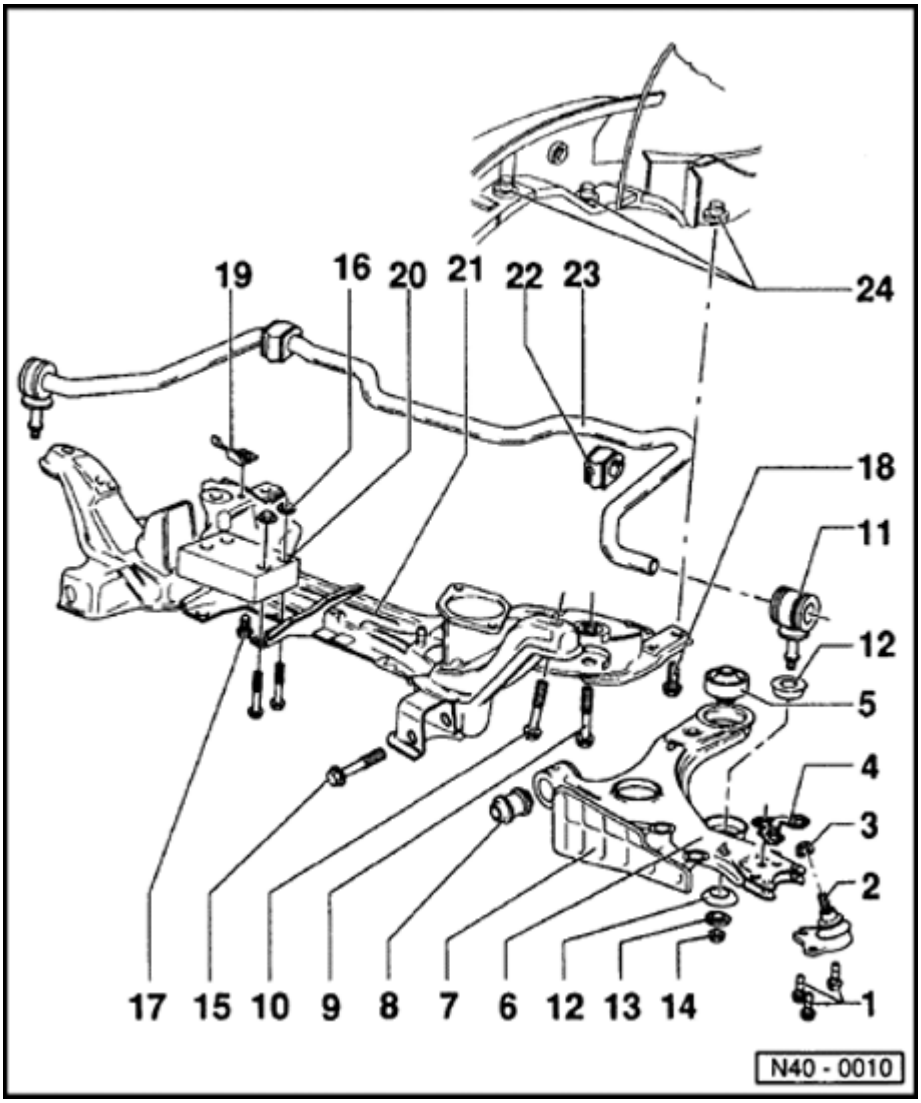

20 - Vibration damper

- Not installed on vehicles with VR 6 engine

21 - Sub-frame

- Removing and installing with assemblies installed: supporting assemblies ⇒ Fig. 4
- Remove sub-frame from below with control arm but without steering gear using transmission jack VAG 1383 or equivalent. After installing check position of steering wheel and align front end.
- Aligning engine/transmission assembly

Repair Manual, Engine Mechanical, Repair Group 10

22 - Stabilizer bar mounting

23 - Stabilizer bar

- 24 mm diameter

24 - Cap nut

- Reworking in side member ⇒ Page 40-11

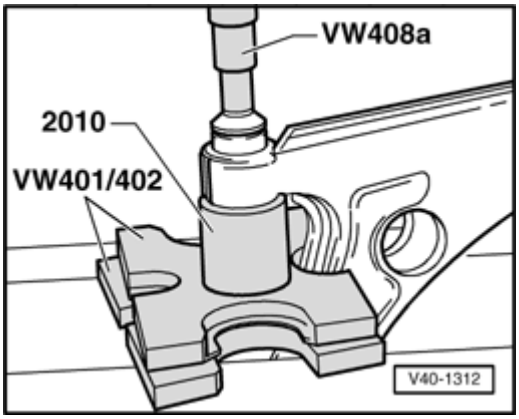

Fig. 1 Control arm front mounting, pressing out and in

Note:

Before pressing in, coat with lubricant, e.g. soft soap.

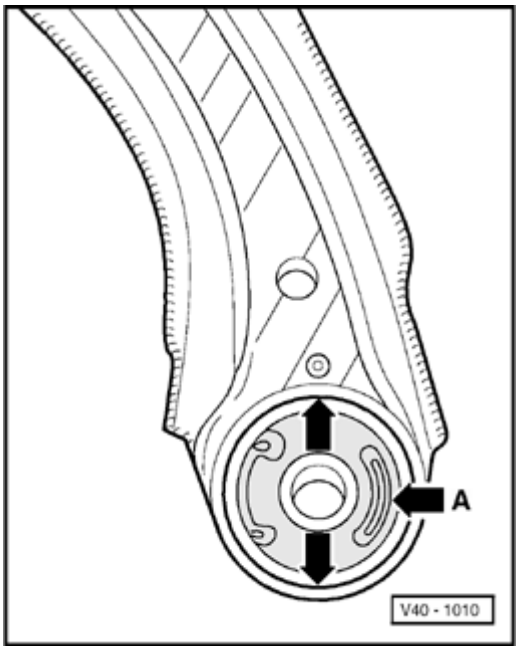

Fig. 2 Control arm rear mounting, installation position

One of the embossed arrows points toward the recess in the control arm and the kidney shaped opening -arrow -A- in mounting faces towards center of vehicle.

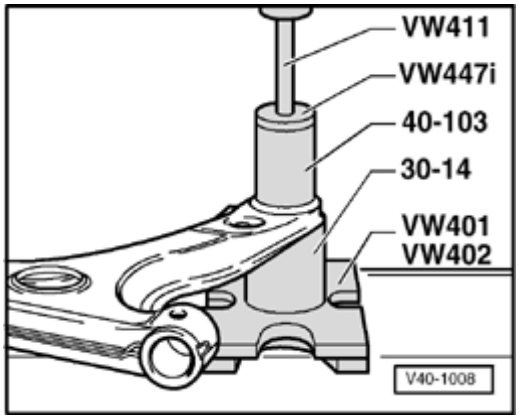

Fig. 3 Control arm rear mounting, pressing out and in

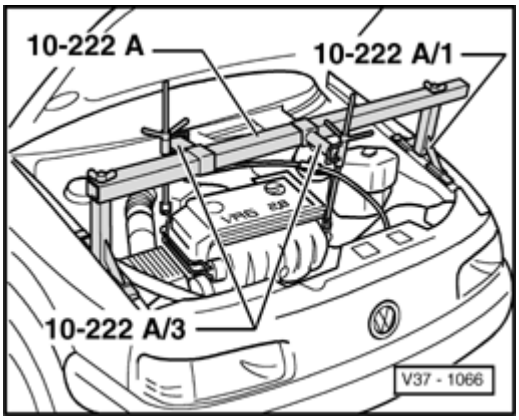

Fig. 4 Engine/transmission assembly, supporting with 10-222 A and 10-222 A/3

Ball joint, removing and installing (Plus running gear)

Removing

- Loosen 12-point nut with vehicle standing on its wheels.

- Disconnect drive shaft at transmission drive flange.

- Remove bolts -arrow -A-.

- Loosen bolt -arrow -B-.

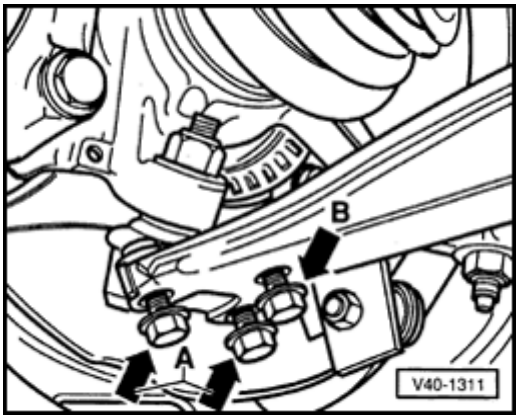

- Separate connection between ball joint/control arm. (First mark installation position).

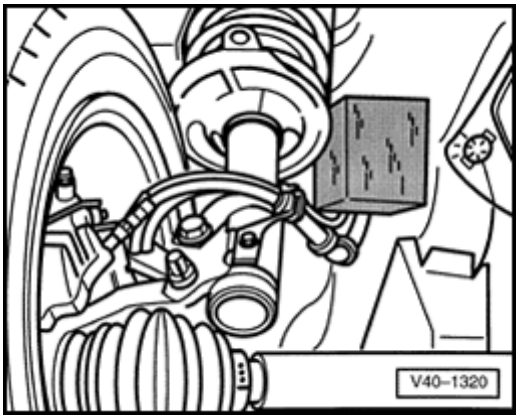

- Swing wheel and suspension strut outward and support.

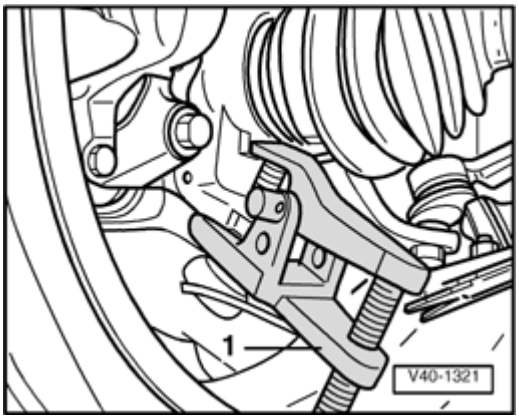

- Install ball joint splitter as shown in illustration and press out ball joint.

1 - Splitter. Matra V 176

Note:

- *Place transmission jack VAG 1383/A, or equivalent, underneath (danger of accident through falling parts when pressing out the ball joint).*
- *Protect ball joint threads by threading nut on a few turns.*

Installing

- Install ball joint in wheel bearing housing.

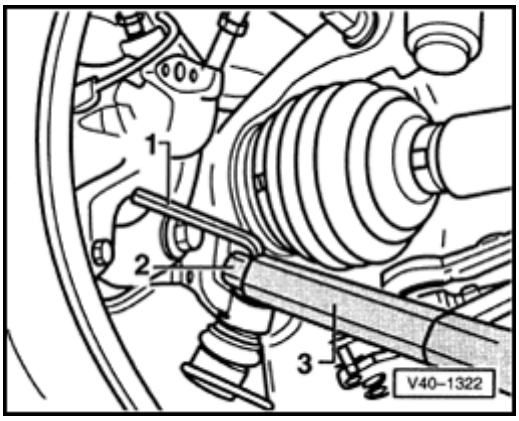

- Thread on new self-locking nut, and counterhold with hex key (6 mm AF).

1 - Hex key (6 mm AF), shortened by approx. 10 mm.

2 - Crowfoot insert or slotted ring socket insert ⇒ Page 40-35

3 - VAG 1331

- Secure ball joint to control arm (align to old marks).

40-35

Note:

Make sure that the boot is not damaged or twisted.

Tightening torques

Ball joint to wheel bearing housing: 45 Nm (33 ft lb)

Ball joint to control arm: 35 Nm (26 ft lb)

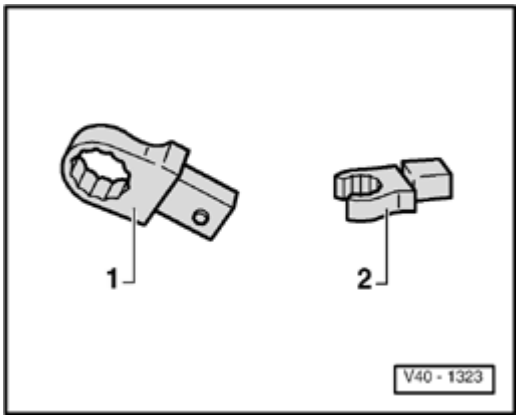

1 - Box insert (commercial type, 19 mm AF)

2 - Crowfoot insert (commercial type, 19 mm AF)

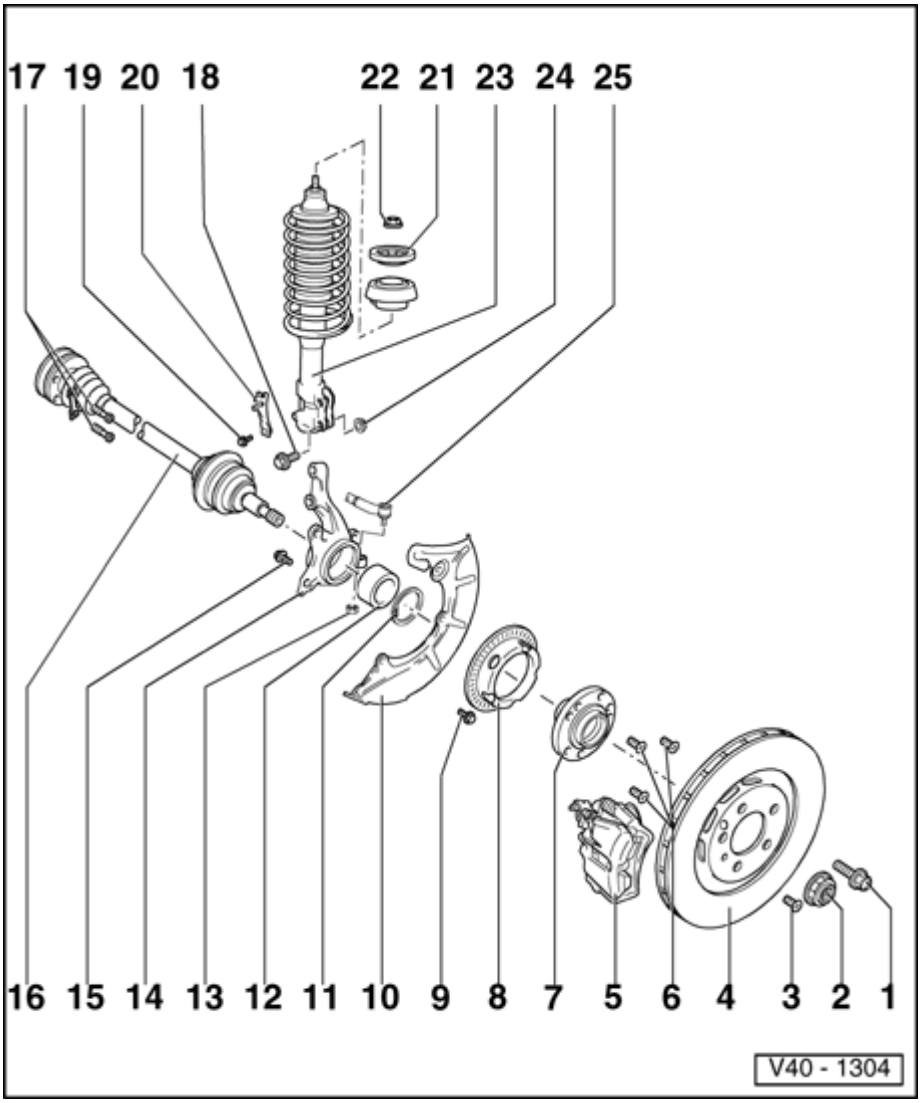

Wheel bearing and suspension strut, removing and installing (Plus suspension)

Notes ⇒ Page 40-14

1 - Wheel bolt, 110 Nm (81 ft lb)

2 - Self-locking 12-point nut

- 90 Nm (66 ft lb) and turn 45° further ($^1/_8$)
- Loosening and tightening ⇒ Page 40-44
- Any paint residue and/or corrosion on thread of the outer joint must be removed before the nut is installed.

3 - Screw

4 - Brake disc

- Repair instructions ⇒ Page 46-1

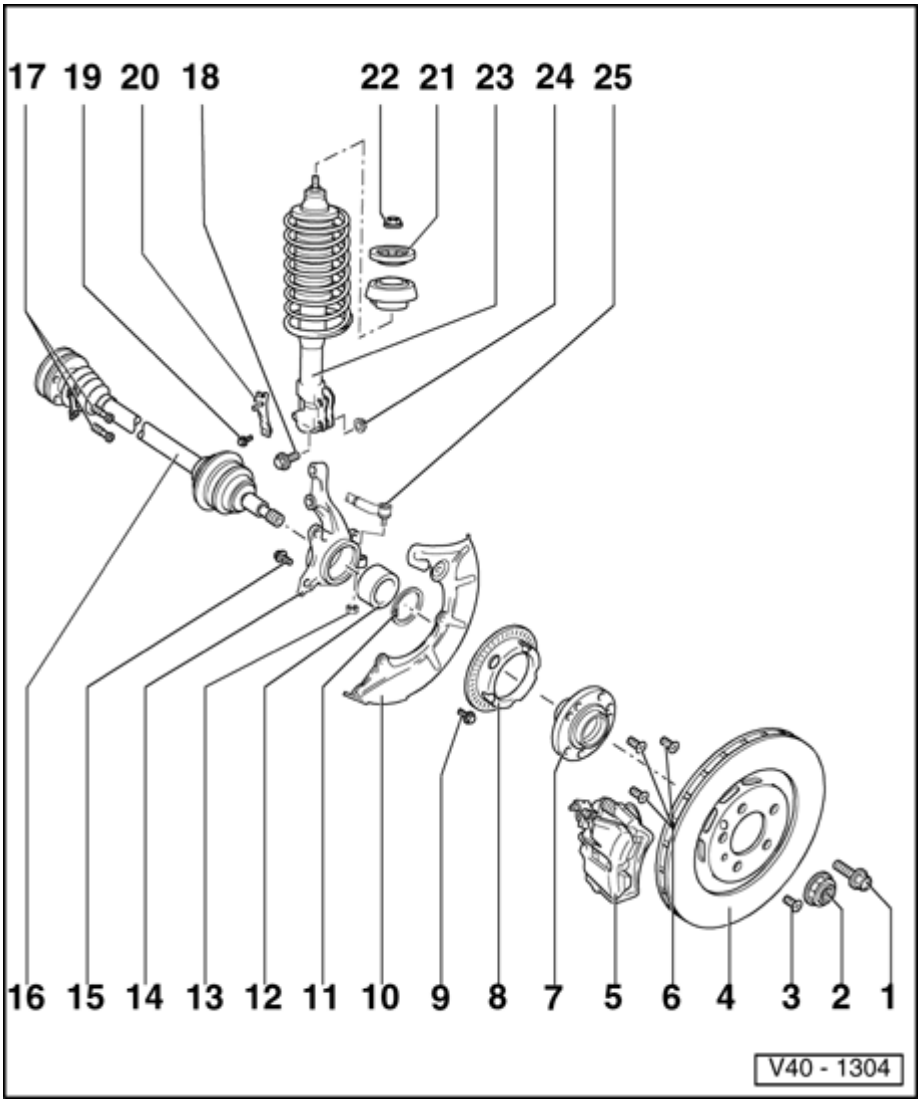

5 - Brake caliper

- Do not loosen brake hose when working on front suspension
- Hang up with wire or similar
- Replacing brake pads ⇒ Page 46-6

6 - Countersunk screw

7 - Hub

- Pressing out ⇒ Fig. 2
- Pressing in ⇒ Fig. 6
- Pulling off inner race ⇒ Fig. 3

8 - Speed sensor rotor

- Only for vehicles with ABS

9 - Hex bolt, 10 Nm (7 ft lb)

10 - Splash plate

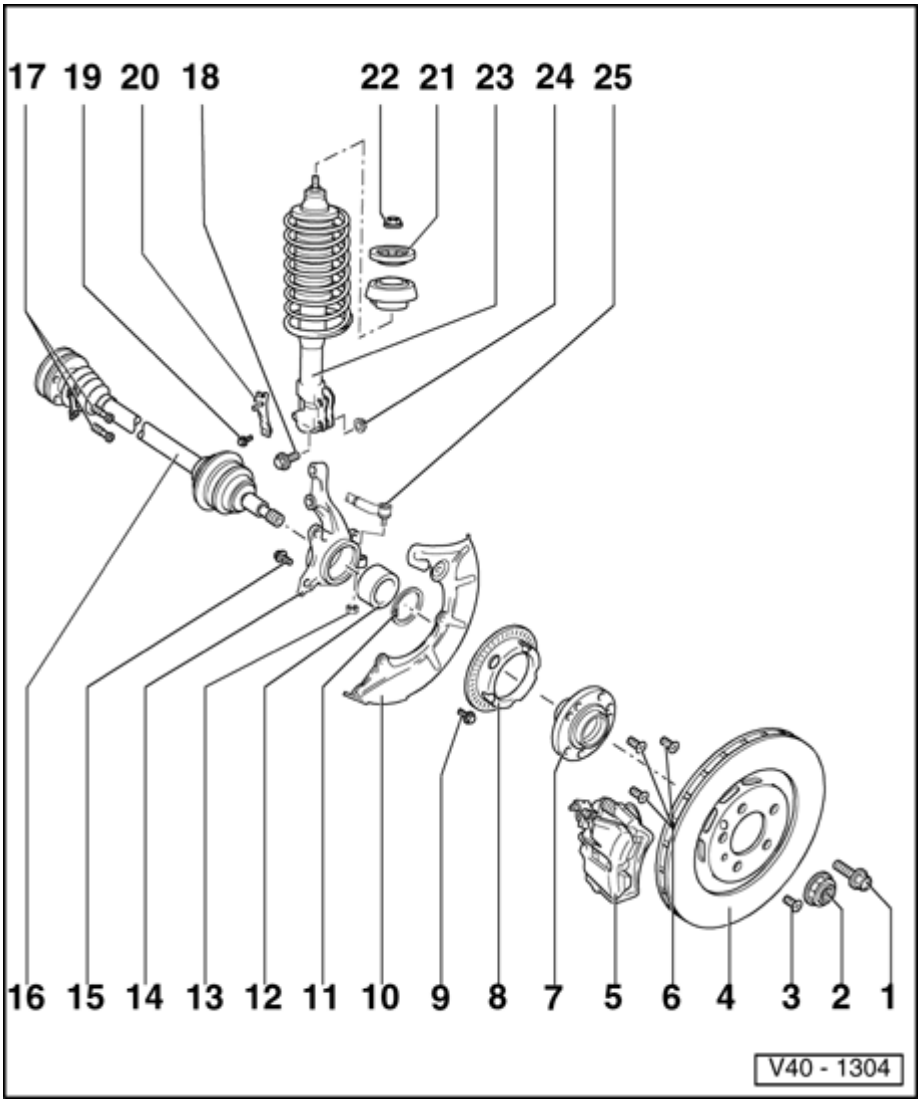

11 - Circlip

- Ensure seated correctly

12 - Wheel bearing

- Pressing out ⇒ Fig. 4
- Always replace, as it is destroyed during pressing out
- Pressing in ⇒ Fig. 5

13 - Self-locking hex nut, 35 Nm (26 ft lb)

14 - Wheel bearing housing

15 - Self-locking bolt/washer, 125 Nm (92 ft lb)

16 - Drive shaft

- Removing and installing ⇒ Page 40-43
- Repairing ⇒ Page 40-46

17 - Socket head multi-point bolt, 45 Nm (33 ft lb)

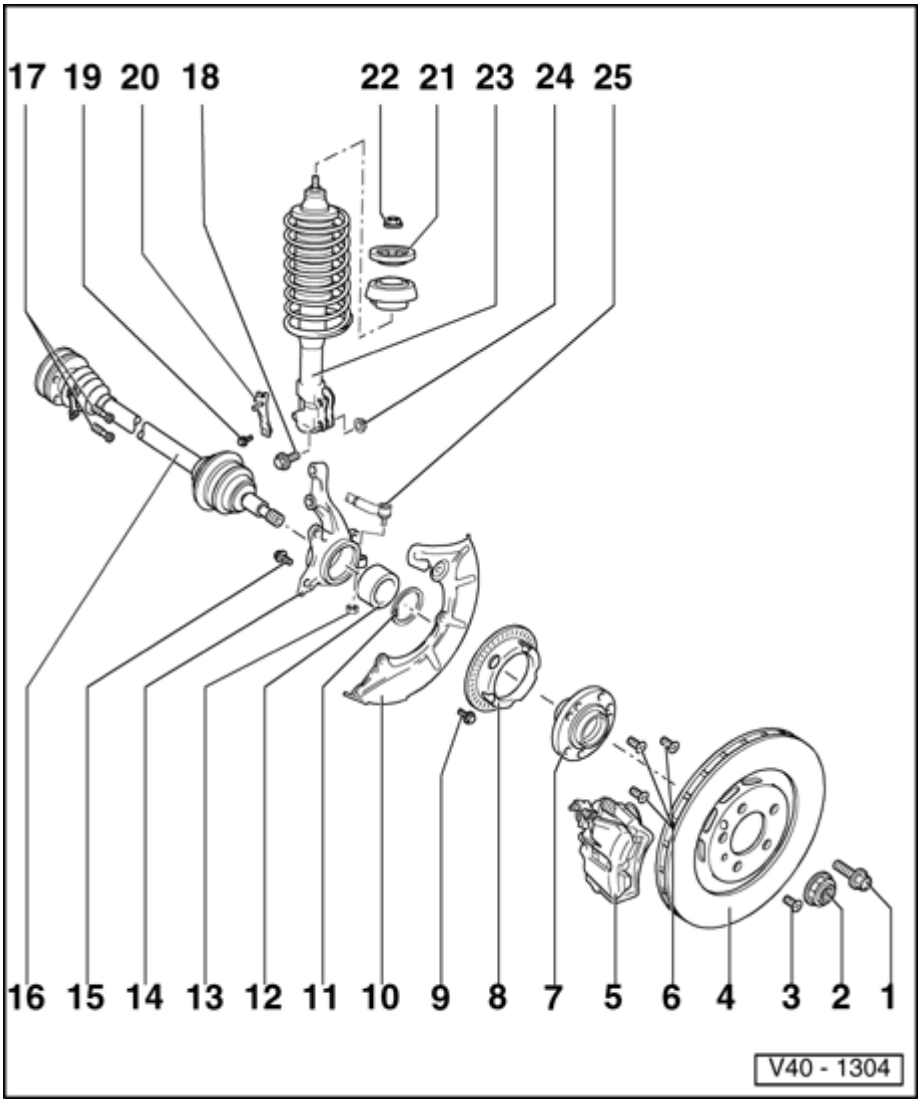

18 - Hex bolt

- Camber adjustment ⇒ Page 44-1
- Before loosening, mark installation position

19 - Hex bolt

20 - Bracket

21 - Stop

22 - Self-locking hex nut, 60 Nm (44 ft lb)

- Loosening and tightening ⇒ Fig. 1

23 - Suspension strut

- Disassembling and assembling ⇒ Page 40-23

24 - Self-locking hex nut, 95 Nm (70 ft lb)

25 - Tie rod

- Removing and installing ⇒ Page 48-77

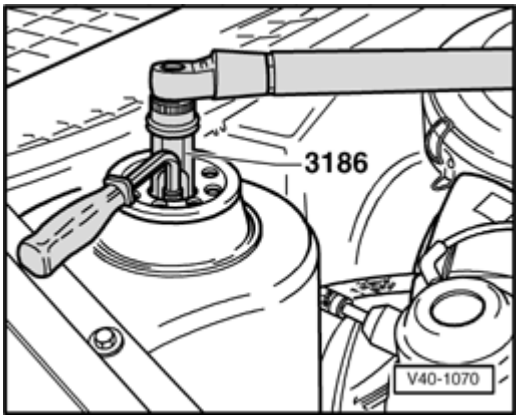

Fig. 1 Suspension strut to body, loosening and tightening

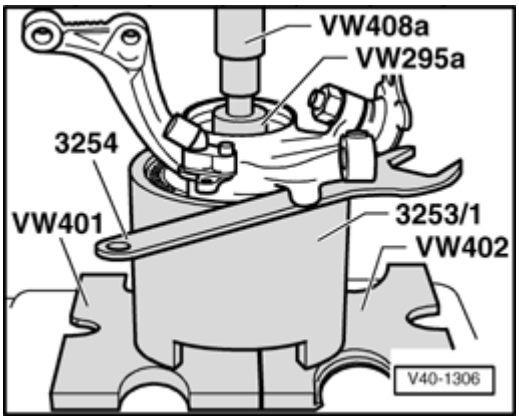

Fig. 2 Hub, pressing out of wheel bearing housing

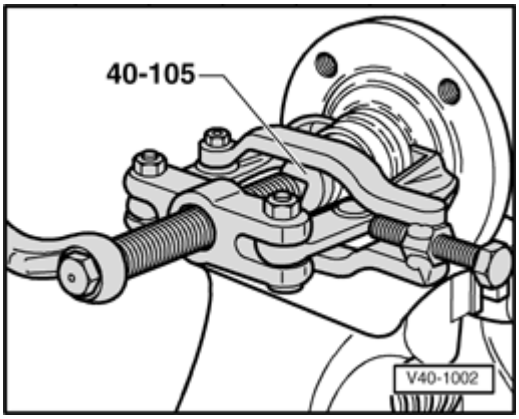

Fig. 3 Inner race, pulling off hub

Only use puller with leg clamp e.g. Kukko 204-2 (commercial type).

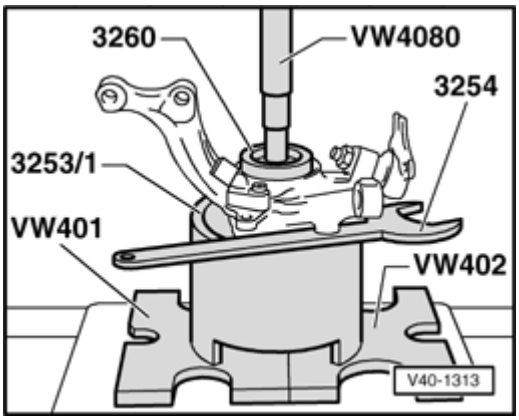

Fig. 4 Wheel bearing, pressing out of wheel bearing housing

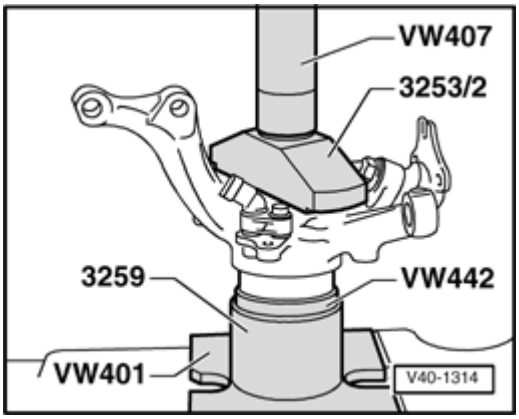

Fig. 5 Wheel bearing, pressing into wheel bearing housing

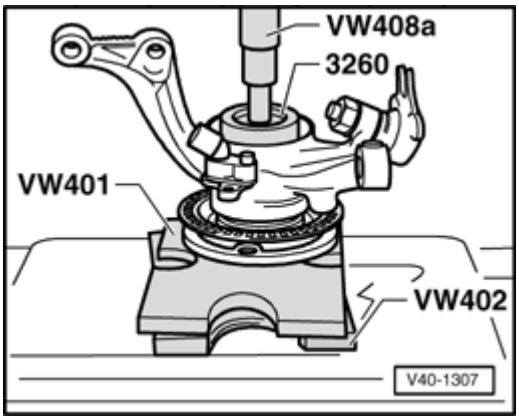

Fig. 6 Hub, pressing into wheel bearing housing

Drive shaft, removing and installing (Plus running gear)

Removing

- Loosen 12-point nut with vehicle standing on its wheels.

- Disconnect drive shaft from transmission drive flange.

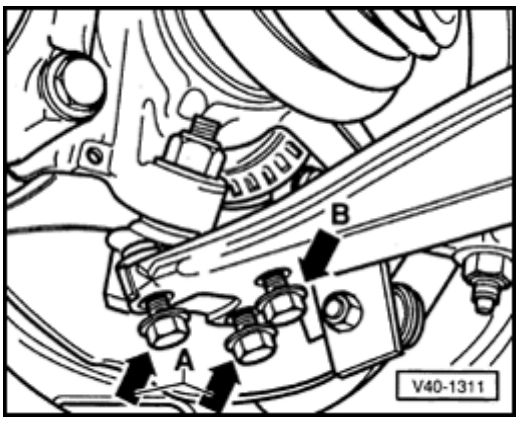

- Remove bolts (arrow -A-).
- Loosen bolt (arrow -B-).
- Separate connection between ball joint/control arm. (First mark installation position).

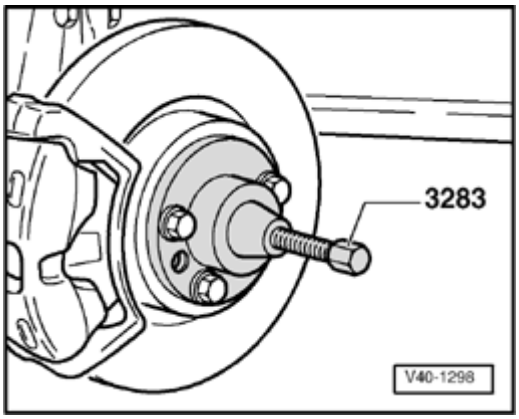

- Press drive shaft out. Install tool as shown in illustration.

Note:

When pressing drive shaft out ensure sufficient clearance is available.

Installing

- Remove remains of locking fluid from outer joint and hub splines. (Splines must be free of oil and grease).

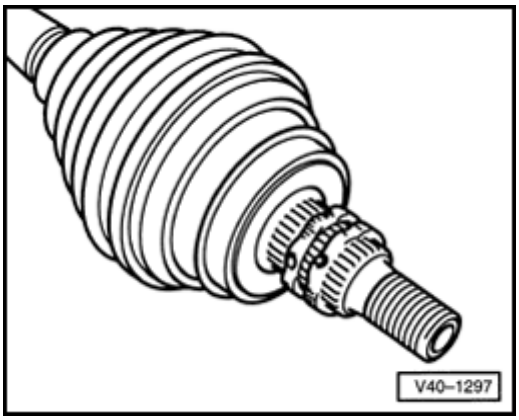

- Apply locking fluid D 185 400 A2 to splines as shown in illustration. Bead cross section approx. 3 mm.
- Install drive shaft.
- Connect ball joint to control arm.
- Install drive shaft to transmission flange shaft and secure.

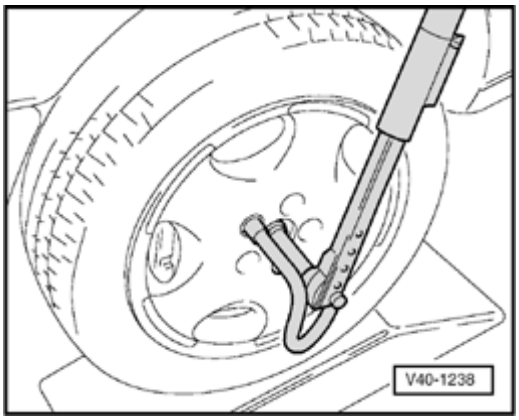

- Install 12-point nut to drive shaft and tighten.

Note:

- *To tighten 12-point nut we recommend the angle measuring wrench VAG 1756 or equivalent.*
- *Only loosen and tighten with vehicle standing on its wheels (danger of accident).*

40-45

Tightening torques:

Drive shaft to flange shaft/transmission 45 Nm (33 ft lb)

Drive shaft to wheel bearing 90 Nm (66 ft lb) and housing turn 45° further ($^1/_8$ turn)

Ball joint/control arm 35 Nm (26 ft lb)

Drive shaft, repairing

Drive shafts on vehicles with Plus suspension have shorter and finer splines on the outer joint. The wheel bearing is secured by a 12-point nut.

The splines of the outer joint and the hub on Plus suspensions are secured with locking fluid D 185 400 A2.

Drive shaft, removing and installing

Vehicles with Base suspension ⇒ Page 40-14

Vehicles with Plus suspension ⇒ Page 40-43

Note:

- *Grease quantity:*

  - *Outer constant velocity joint 100 g of G-6.3 grease*

  - *Inner constant velocity joint 110 g of G-6.3 grease*

- *Greasing outer joint: press half of the grease into the joint, and the other half evenly into the boot.*

- *Greasing inner joint: press half of the grease into the inner joint from both sides, the other half evenly into the boot.*

- *When replacing the boot grease joint as required.*

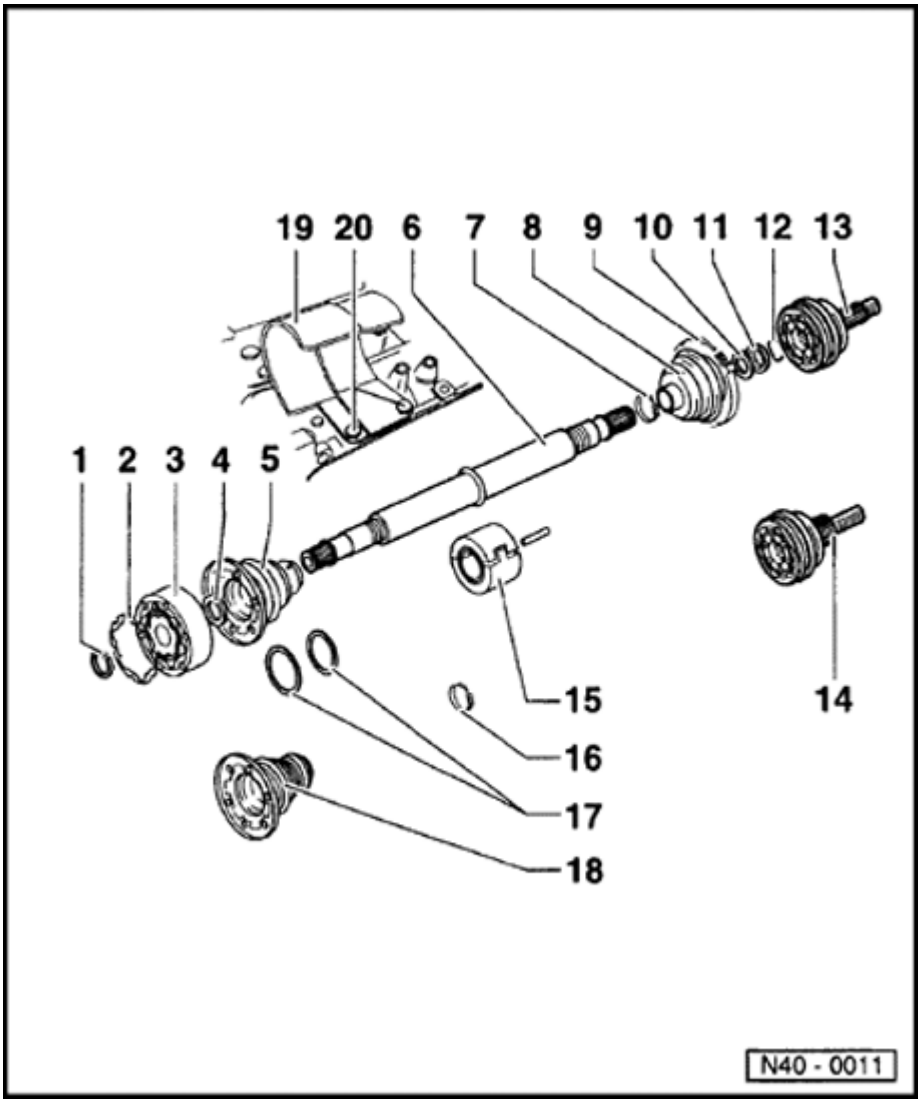

1 - Circlip

- Always replace
- Remove and install with VW161 a

2 - Gasket

- Always replace. Pull off protective foil and stick onto joint. (Only on 100 mm diameter constant velocity joints

3 - Inner constant velocity joint 100 mm diameter

- Only replace complete
- Pressing off ⇒ Fig. 3
- Pressing on ⇒ Fig. 4
- Greasing ⇒ Notes ⇒ Page 40-46
- Checking ⇒ Page 40-62

4 - Dished washer

- Inner diameter splined
- Installation position: outer diameter (concave side) contacts constant velocity joint

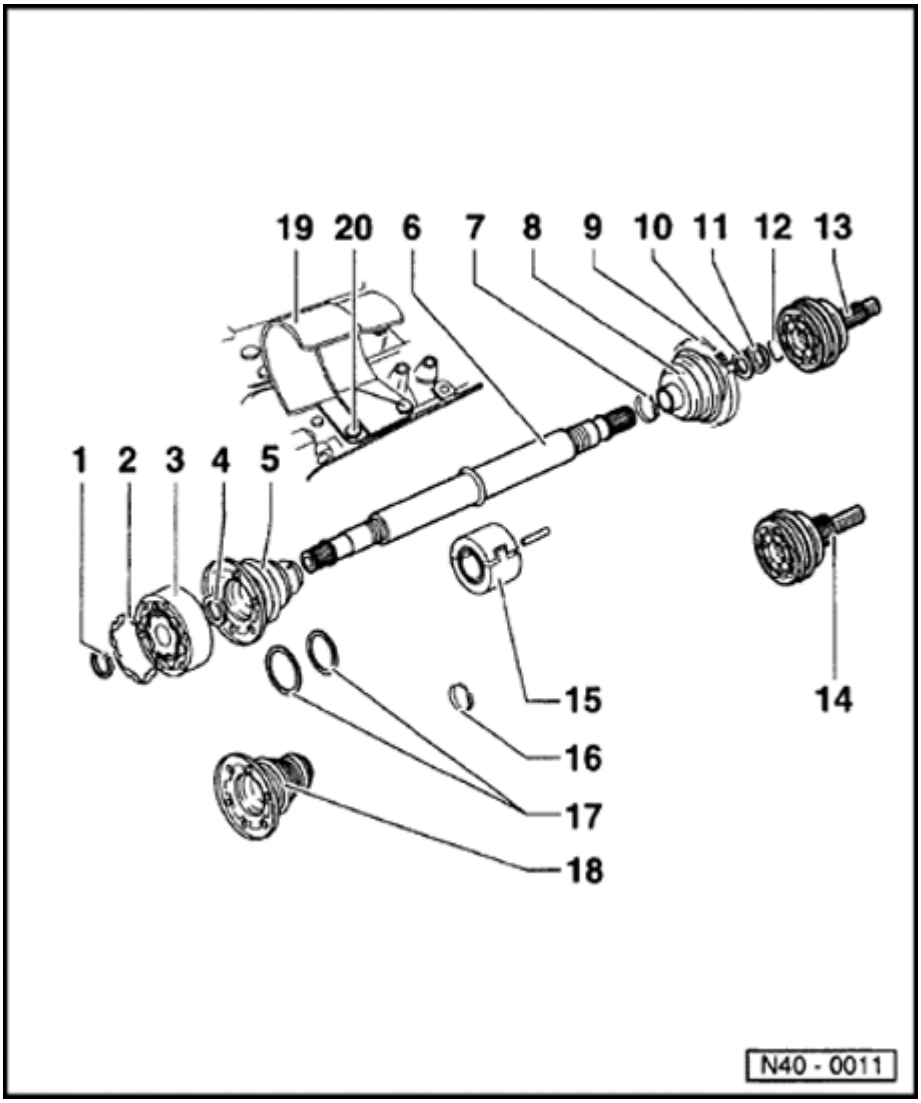

5 - Boot for 100 mm diameter constant velocity joint

- Rubber version
- With vent hole
- Check for tears and chafing
- Installation position for left drive shaft ⇒ Fig. 5
- Installation position for right drive shaft ⇒ Fig. 6
- Coat inside of cap with D3
- Drive off with drift

6 - Drive shaft

- Left shaft, solid bar (not illustrated)
- Right shaft, tube

7 - Clamp

- Always replace
- Tensioning ⇒ Fig. 7 and ⇒ Fig. 8

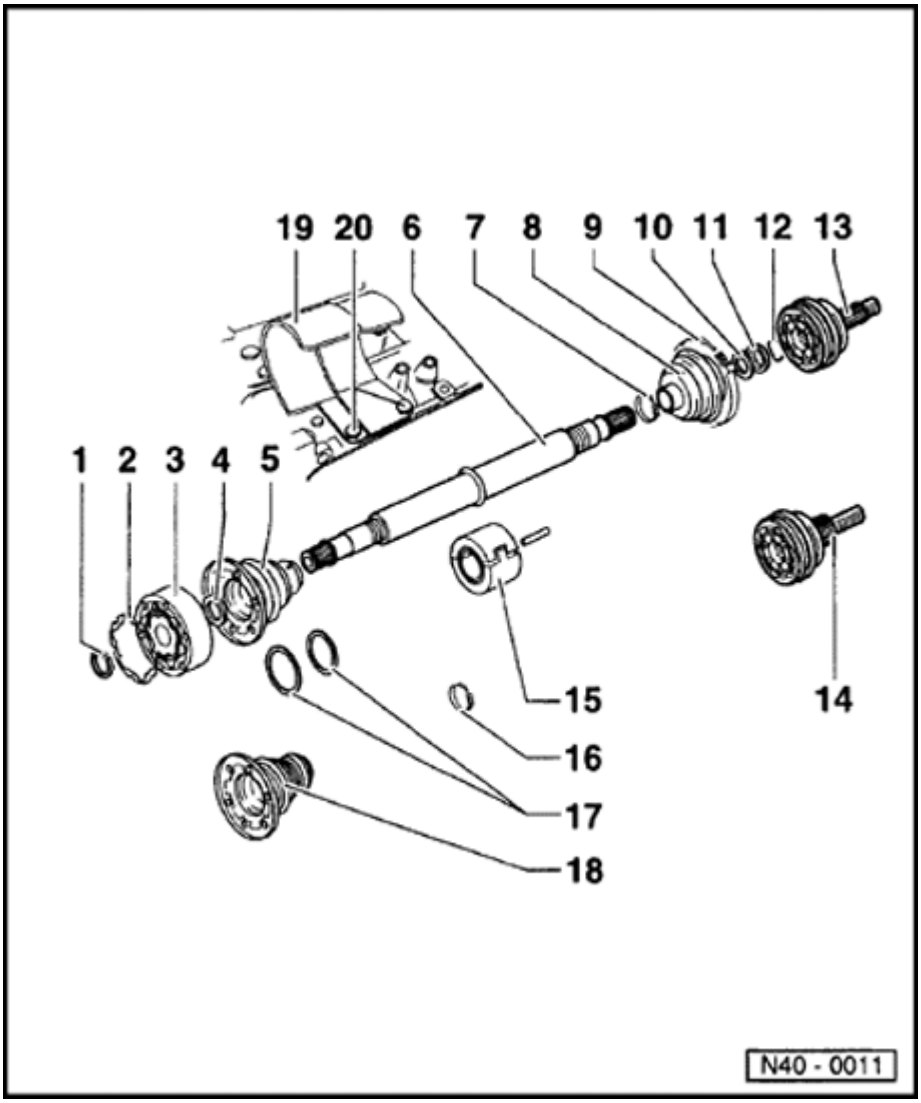

8 - Boot for 90 mm diameter constant velocity joint

- Polyester elastomer version
- Check for tears and chafing
- The balance pressure briefly ventilate boot before tensioning the small clamp ⇒ Fig. 7
- Installation position for left shaft, wheel end ⇒ Fig. 10 and ⇒ Fig. 11
- Installation position for right shaft, wheel end ⇒ Fig. 12

9 - Clamp

- Always replace
- Tensioning ⇒ Fig. 7 and ⇒ Fig. 8

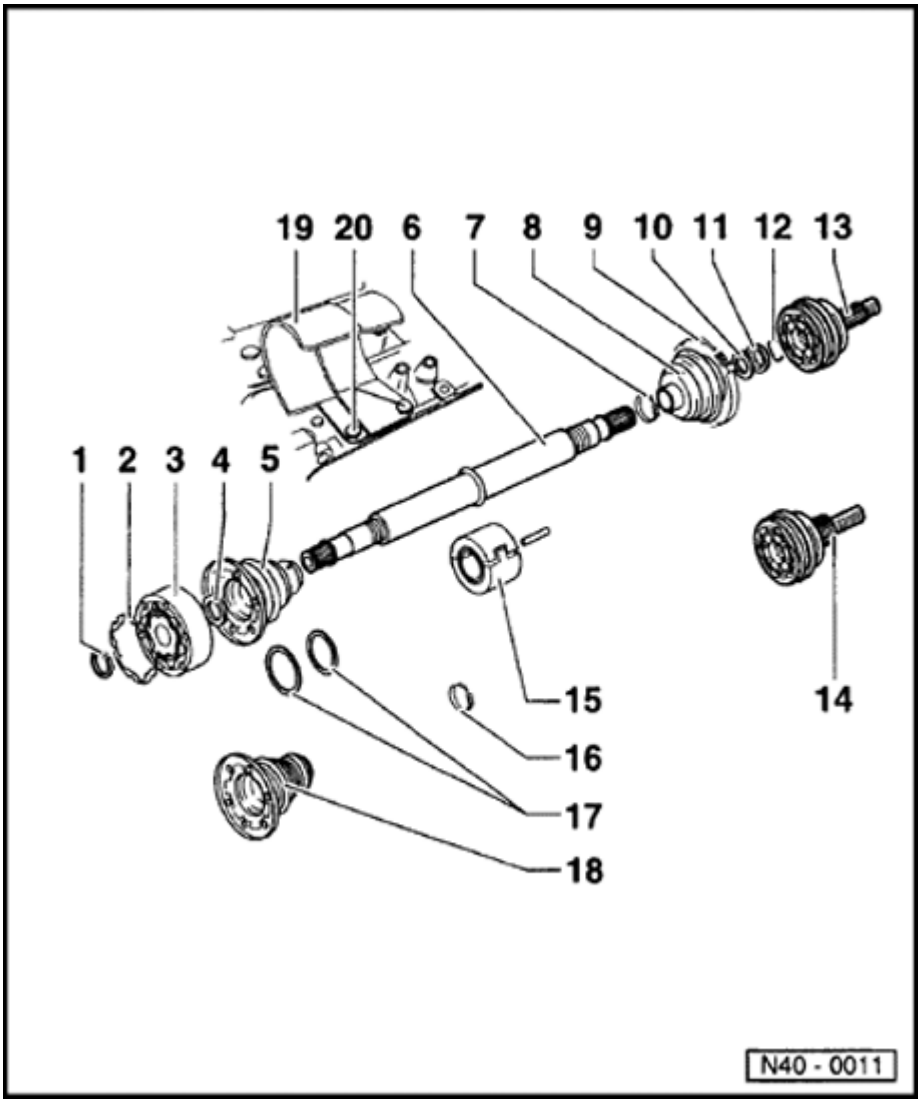

10 - Dished washer

- Outer diameter (concave side) contacts thrust washer

11 - Thrust washer

12 - Circlip

- Always replace
- Insert in shaft groove

13 - Outer constant velocity joint, 90 mm diameter

- Only replace complete
- Removing ⇒ Fig. 2
- Installing: drive onto shaft with plastic hammer until compressed circlip seats
- Greasing ⇒ Notes ⇒ Page 40-46
- Checking ⇒ Page 40-60

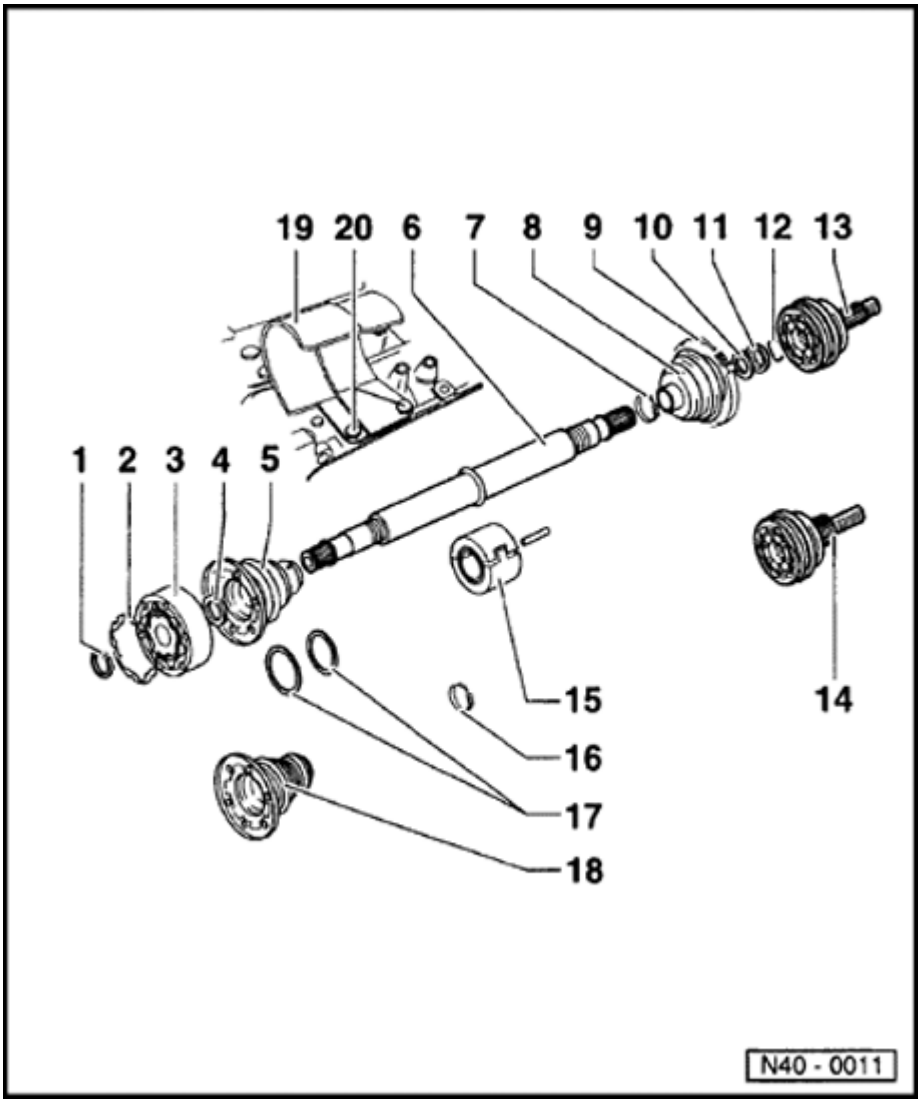

14 - Outer constant velocity joint, 90 mm diameter

- For vehicles with 16V and VR6
- Wedge splines, larger diameter
- Only replace complete
- Removing ⇒ Fig. 2
- Installing: drive onto shaft with plastic hammer until compressed circlip seats
- Greasing ⇒ Notes ⇒ Page 40-46
- Checking ⇒ Page 40-60

15 - Vibration damper

- Removing and installing ⇒ Fig. 1
- Installation position ⇒ Fig. 1
- Available as spare part
- Is only installed on the right drive shaft tube. Exception: On vehicles with 85 kW (115 hp) and manual transmission 02C only installed on left solid drive shaft

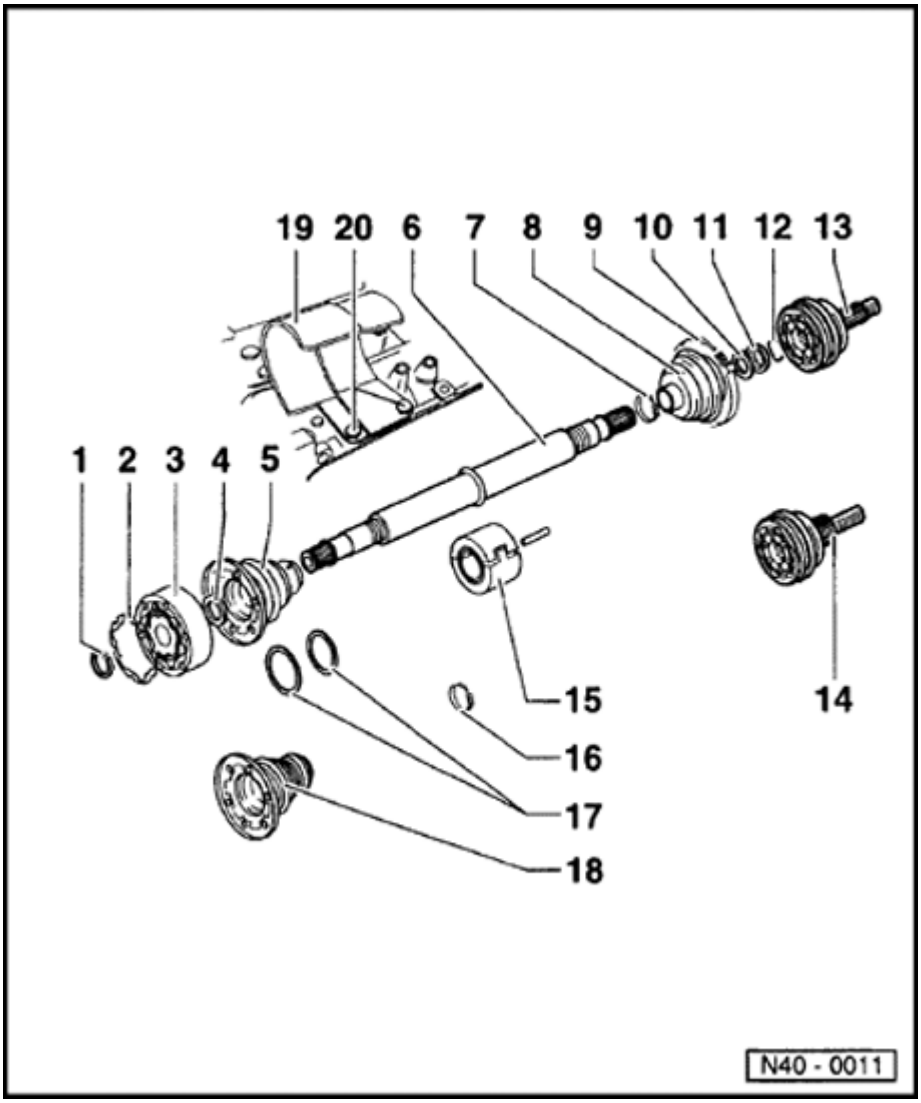

16 - Clamp

- Always replace

17 - Support rings

- On rubber type boot only
- On transmission end only
- See Parts catalog

18 - Boot for 100 mm diameter constant velocity joint

- Polyester elastomer version
- Check for tears and chafing
- To balance pressure briefly ventilate boot before tensioning the small clamp ⇒ Fig. 7

19 - Protective cap

20 - Hex bolt, 35 Nm (26 ft lb)

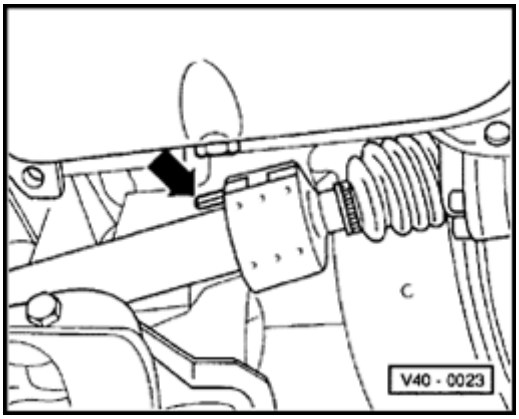

Fig. 1 Vibration damper, removing and installing

The damper consists of two halves. Both halves are joined to one another by spring pins (arrow). Installation position ⇒ Fig. 1

Note:

- *Only replace vibration damper with drive shaft removed*
- *Before driving in spring pin protect shaft paint finish against damage.*
- *To prevent axial movement apply adhesive tape or a suitable adhesive to internal diameter.*

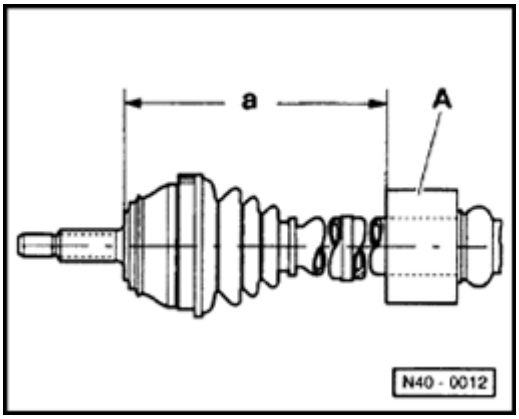

⇒ Fig. 1 Vibration damper, installation position 1

When installing vibration damper -A- note correct installation position. Ensure dimension "a" is maintained.

Dim. "a" = 521 ± 1 mm right shaft

264 ± 1 mm left shaft (if installed)

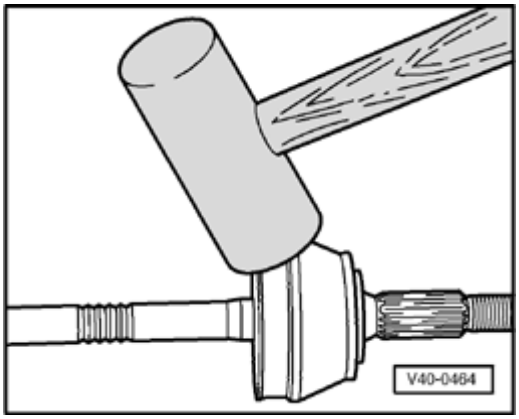

Fig. 2 Outer constant velocity joint, removing

- Drive joint off drive shaft with a firm blow from an aluminium hammer.

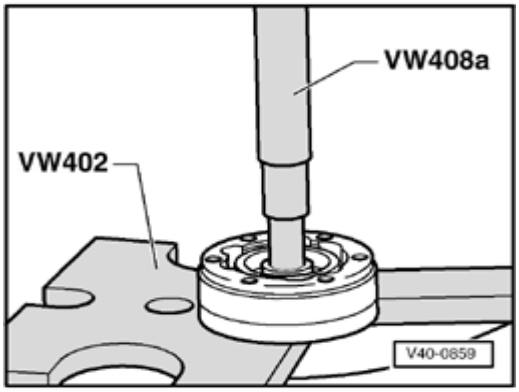

Fig. 3 Inner constant velocity joint, pressing off

Note:

- *First drive boot off with drift*
- *Support ball hub*

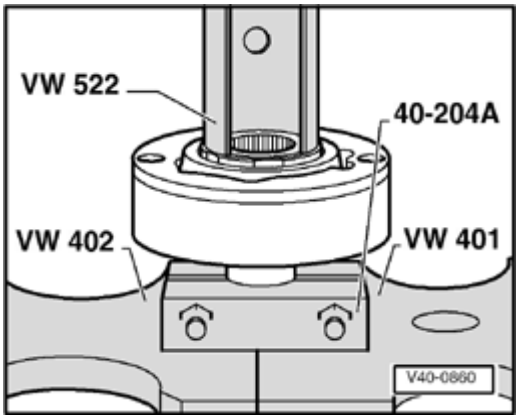

Fig. 4 Inner constant velocity joint, pressing on

- Press on joint up to stop.
- Install circlip.

Note:

Chamfer on inner diameter of ball hub (splines) must face the contact shoulder on the drive shaft.

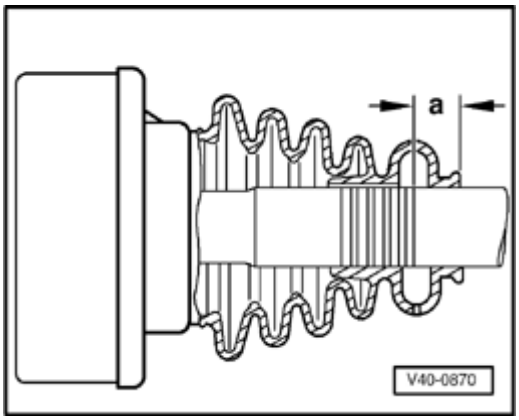

Fig. 5 Installation position of left drive shaft transmission end joint boot - rubber version

Dimension "a" = 17 mm

Note:

Before assembling boot on drive shaft mark position, dimension a , with for example paint or adhesive tape. Under no circumstances should paint surface be damaged with a sharp tool.

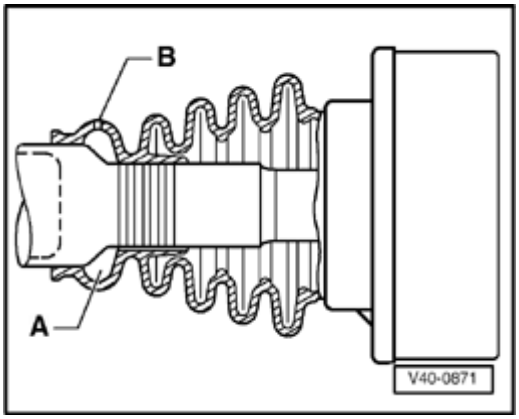

Fig. 6 Installation position of right drive shaft transmission end joint boot

The large diameter of vent chamber -A- must fit on the larger diameter.

B - Vent hole

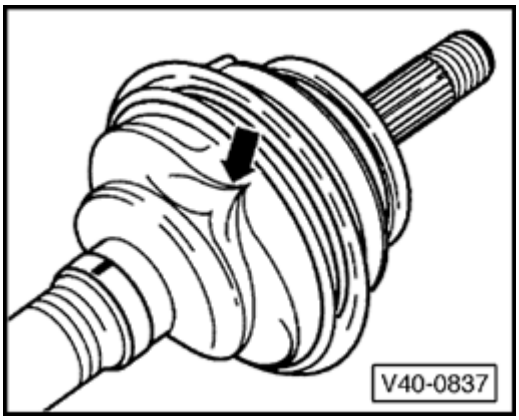

Fig. 7 oint boot, ventilating

Often the boot is pushed in when installing on the joint body. This creates a vacuum inside the boot which draws a fold in (arrow) while driving. After installing, lift the boot at small diameter end to equalize pressure.

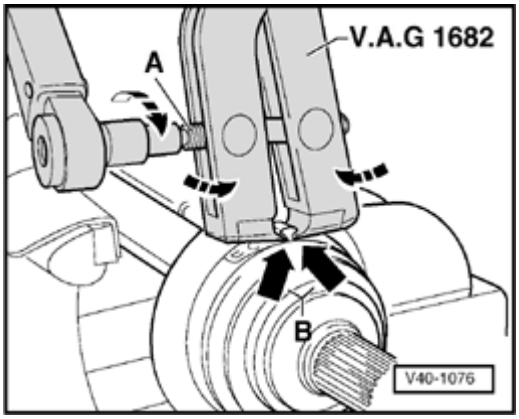

Fig. 8 Larger clamp, tensioning

- Use pliers VAG 1682 as shown in illustration. Ensure that the jaws of the pliers seat in the -arrow -B- of the clamp.
- Tension clamp by turning the spindle with a torque wrench (do not tilt pliers).

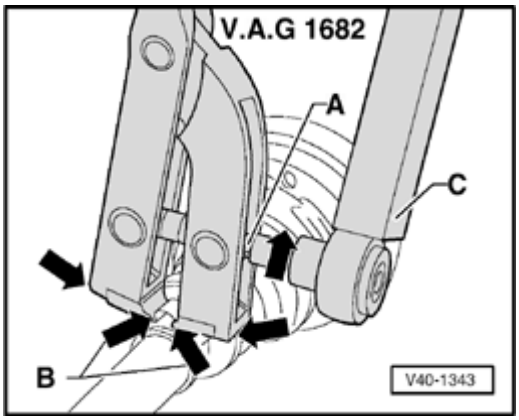

Fig. 9 Smaller clamp, tensioning 40

Note:

- *The clamp can only be tensioned with pliers V.A.G 1682.*
- *Tightening torque: 25 Nm (18 ft lb).*
- *Use torque wrench with 5 - 50 Nm range (e.g. V.A.G 1331).*
- *Make sure the spindle thread is not tight. If necessary lubricate with MOS 2 grease*
- *If the thread is tight, e.g. dirty, the required tensioning force for the hose clamp will not be achieved inspite of correct tightening torque settings.*

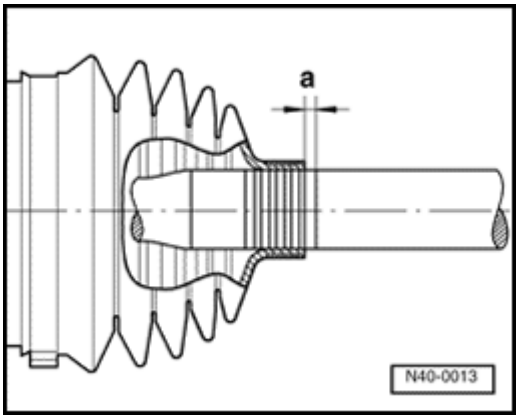

Fig. 10 Installation position of left drive shaft wheel end joint boot, shaft diameter 27 mm

Cuff seating tolerance "a": $^1/_2$ to $1^1/_2$ grooves visible at end of cuff.

Note:

This installation position tolerance is also valid for the left drive shaft transmission end boot (polyester elastomer version).

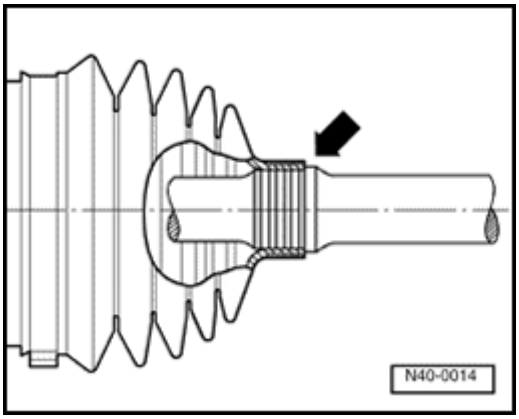

Fig. 11 Installation position of left drive shaft, wheel end, shaft diameter 22 mm

Cuff installation position: Cuff butts against shaft shoulder (arrow).

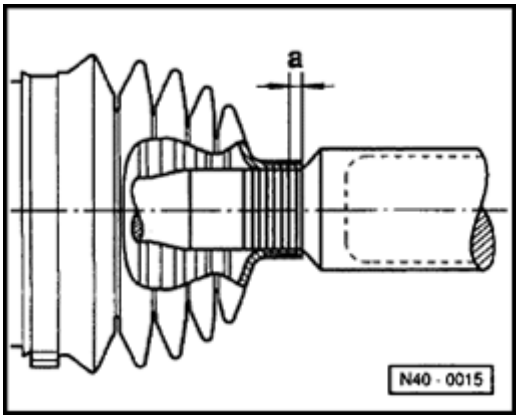

Fig. 12 Installation position of right drive shaft, wheel end joint boot

Cuff seating tolerance "a": From cuff position to chamfer up to $^{1}/_{2}$ a groove visible.

Outer constant velocity joint, checking

The joint should be disassembled to replace dirty grease or for checking the balls and ball tracks for wear and damage.

Removing

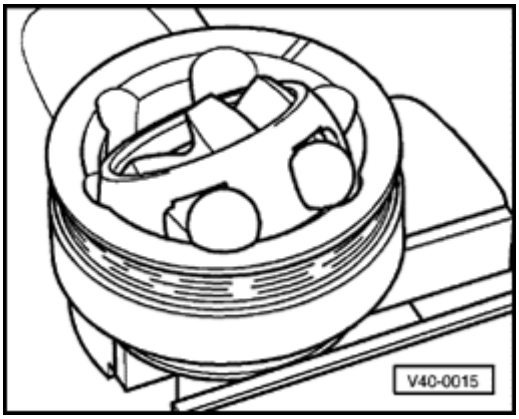

- Before disassembling mark position of the ball hub in relation to the ball cage and housing with an electric scriber or oil stone.
- Swivel ball hub and ball cage.
- Remove balls one after the other.

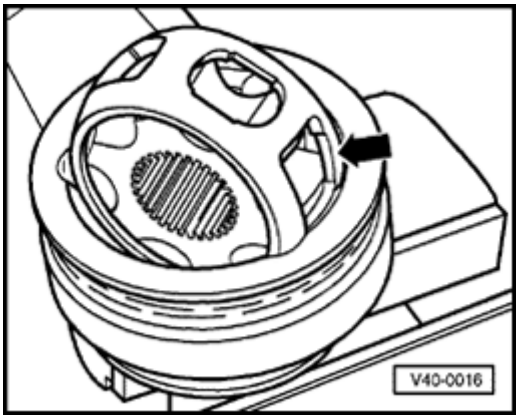

- Turn cage until the two rectangular windows (arrow) are aligned with the joint housing.
- Lift out cage together with hub.

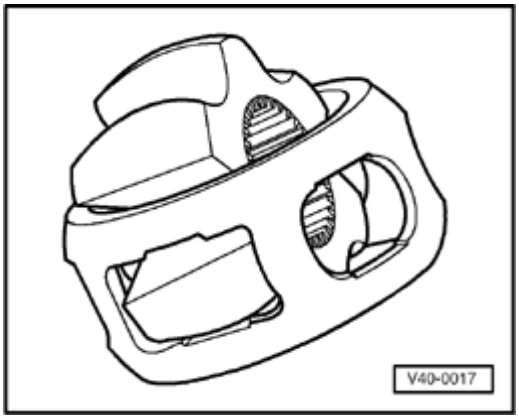

- Swing segment of hub into rectangular cage window.
- Tilt hub out of cage.

Note:

The 6 balls of each joint belong to one tolerance group. Check stub axle, hub, cage and balls for indentations (pitting) and signs of seizure. Excessive backlash in joint will be noticed as a knock during load changes. In such cases the joint must be replaced. Polished areas and ball track marks are not a reason for changing the joint.

Installing

- Press half of the total amount of grease ⇒ Page 40-46 or ⇒ Page 42-46 into the joint housing.
- Install cage with hub in the joint housing.
- Press in the balls one after the other from opposite sides whereby the original position of the hub to cage and joint housing must be restored.
- Install new circlip in the hub.
- Distribute the remaining grease in the boot.

Inner constant velocity joint, checking

The joint should be disassembled to replace dirty grease and when checking the balls and ball tracks for wear and damage.

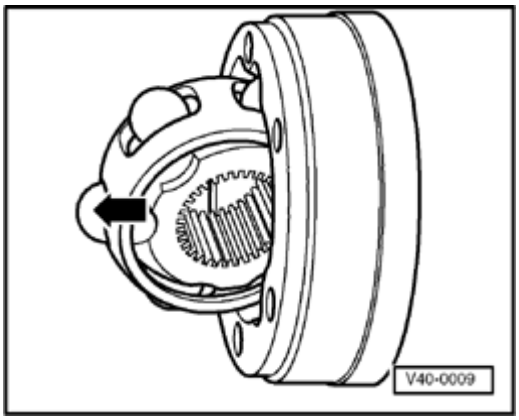

- Swivel ball hub and ball cage.
- Press out ball cage in direction of arrow.
- Press balls out of cage.

Note:

The ball hub and joint are paired and must not be interchanged.

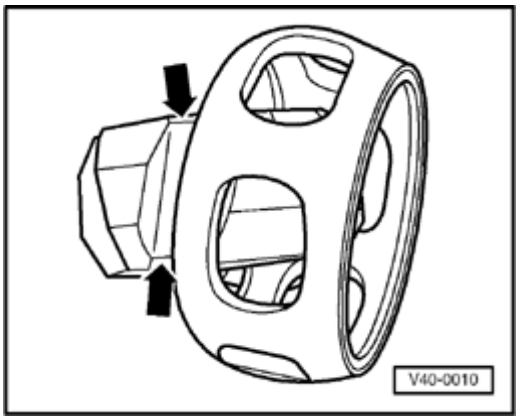

- Tilt ball hub out of ball cage over ball track (arrows).
- Check joint housing, ball hub, ball cage and balls for indentations (pitting) and signs of seizure.

Note:

Excessive backlash in joint will be noticed as a knock during load changes. In such cases the joint must be replaced. Polished areas and ball track marks are not a reason for changing the joint.

Installing

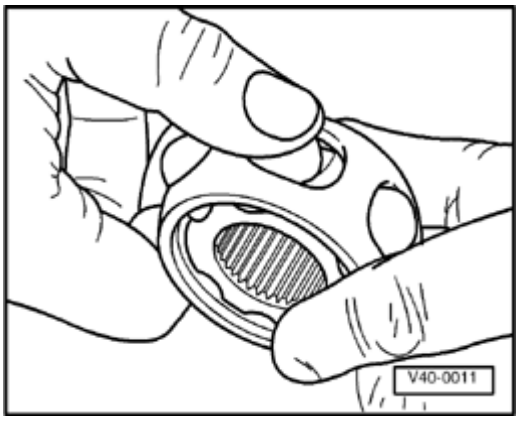

- Insert ball hub over both chamfers into the ball cage. Any installed position is acceptable. Press balls into the cage.
- Insert hub with cage and balls at right angle to the joint.

Note:

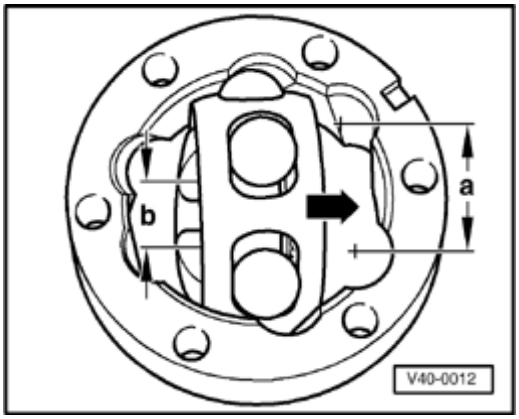

- *When inserting make sure that the wide spacing -a- on joint housing is aligned with the narrow spacing -b- on the hub after swivelling in.*
- *Chamfer on inner diameter of ball hub (splines) must face larger diameter of joint housing.*

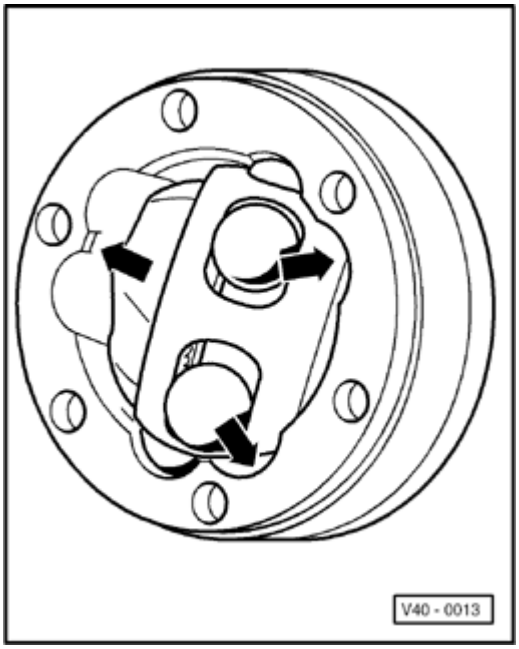

- Swivel in ball hub, whereby the hub must be swivelled out of the cage (arrows) far enough to allow the balls to fit into the ball tracks.

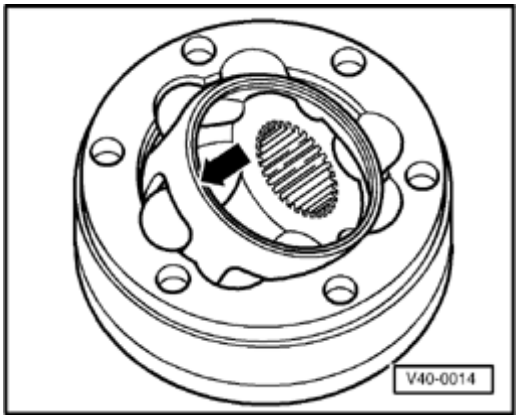

- Swivel in the hub with balls by applying firm pressure on the cage (arrow).

Checking operation of constant velocity joint:

The constant velocity joint is correctly assembled when the ball hub can be moved by hand backward and forward over its entire axial movement range.

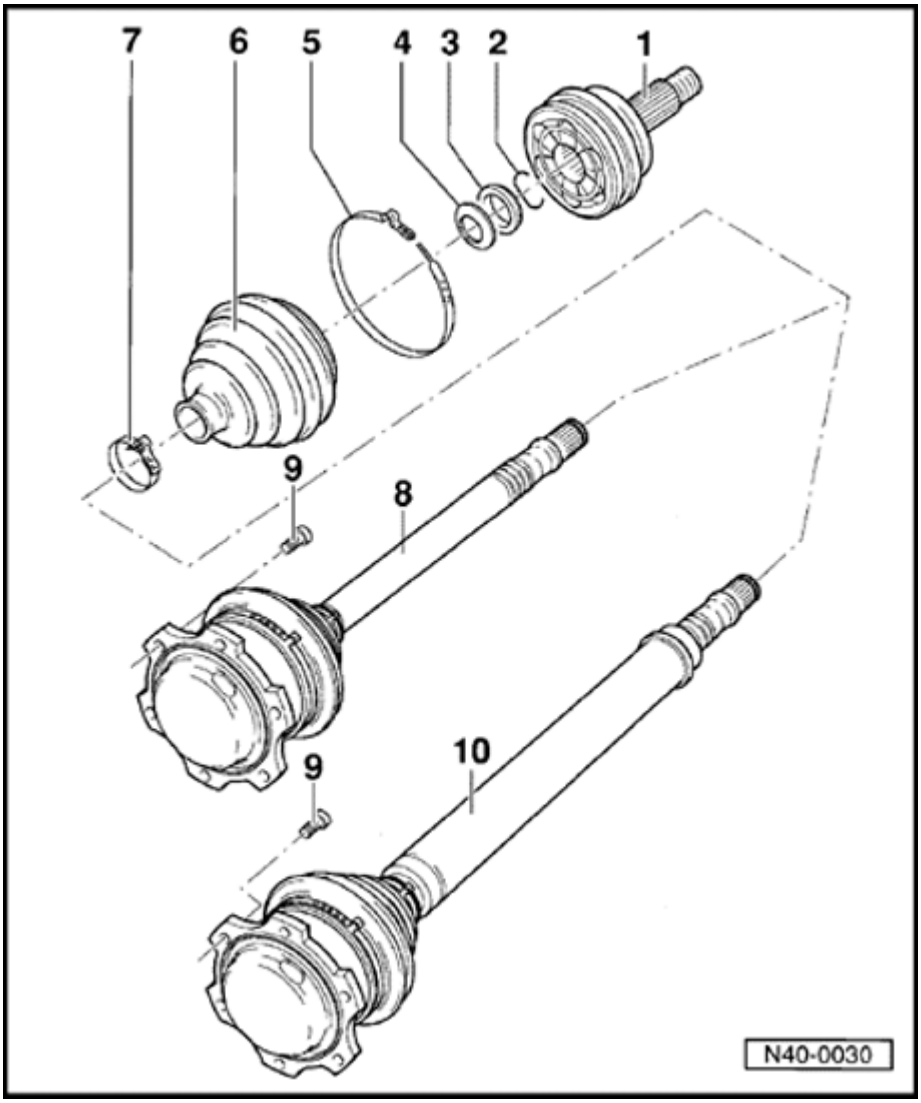

Drive shaft with tripod joint, repairing

1 - Outer constant velocity joint

- Replace complete
- Removing ⇒ Fig. 1
- Installing: Drive onto the shaft with plastic hammer until circlip comes out
- Greasing ⇒ Notes ⇒ Page 40-46
- Checking ⇒ Page 40-62

2 - Circlip

- Always replace
- Install in groove of shaft

3 - Thrust ring

4 - Dished washer

- Larger diameter (concave side) contacts thrust ring

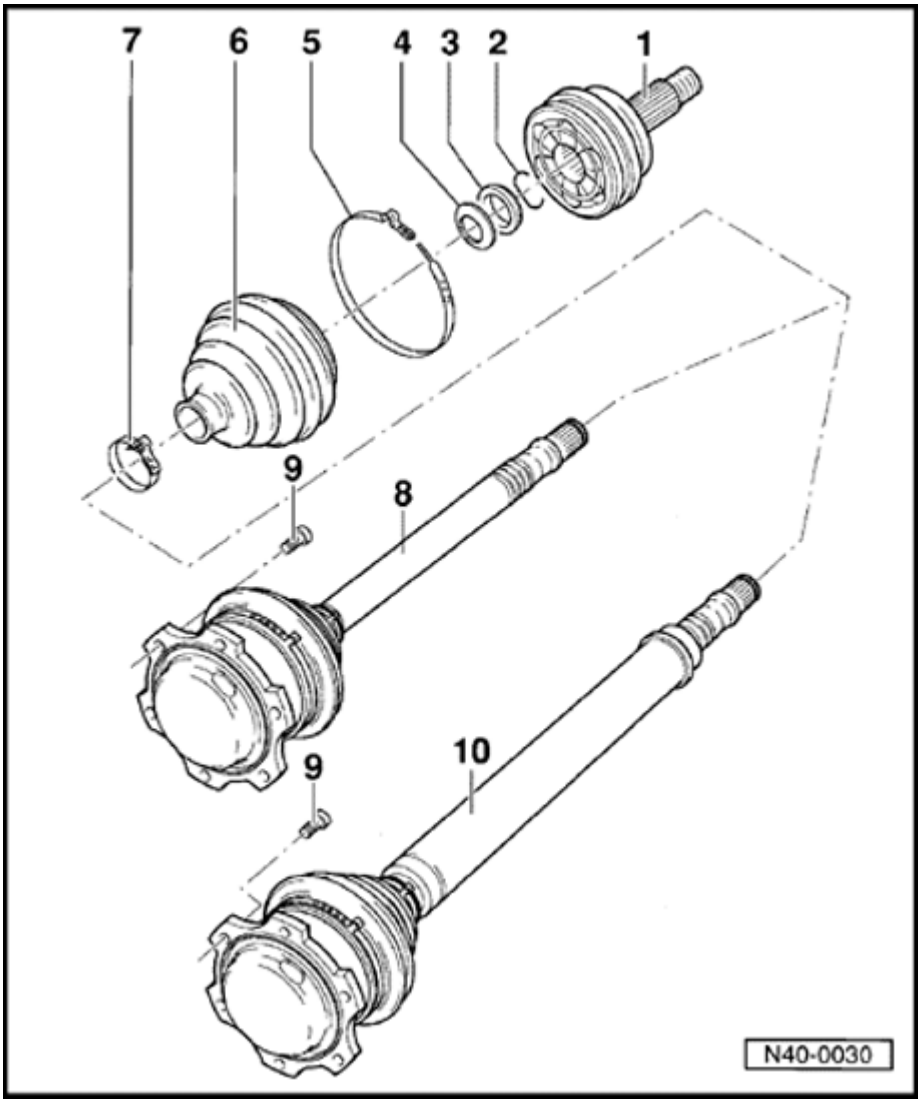

5 - Clamp

- Always replace
- Tightening, ⇒ Fig. 2 and ⇒ Fig. 3

6 - Boot for constant velocity joint, 90 mm dia.

- Check for cracks and abrasion
- Before tightening the small clamp, ventilate boot briefly so pressure is equalized, ⇒ Fig. 2

7 - Clamp

- Always replace
- Tightening, ⇒ Fig. 2 and ⇒ Fig. 4

8 - Drive shaft, left, with inner tripod joint

- Repair of inner joint and replacement of boot not possible at this time
- Replace if damaged

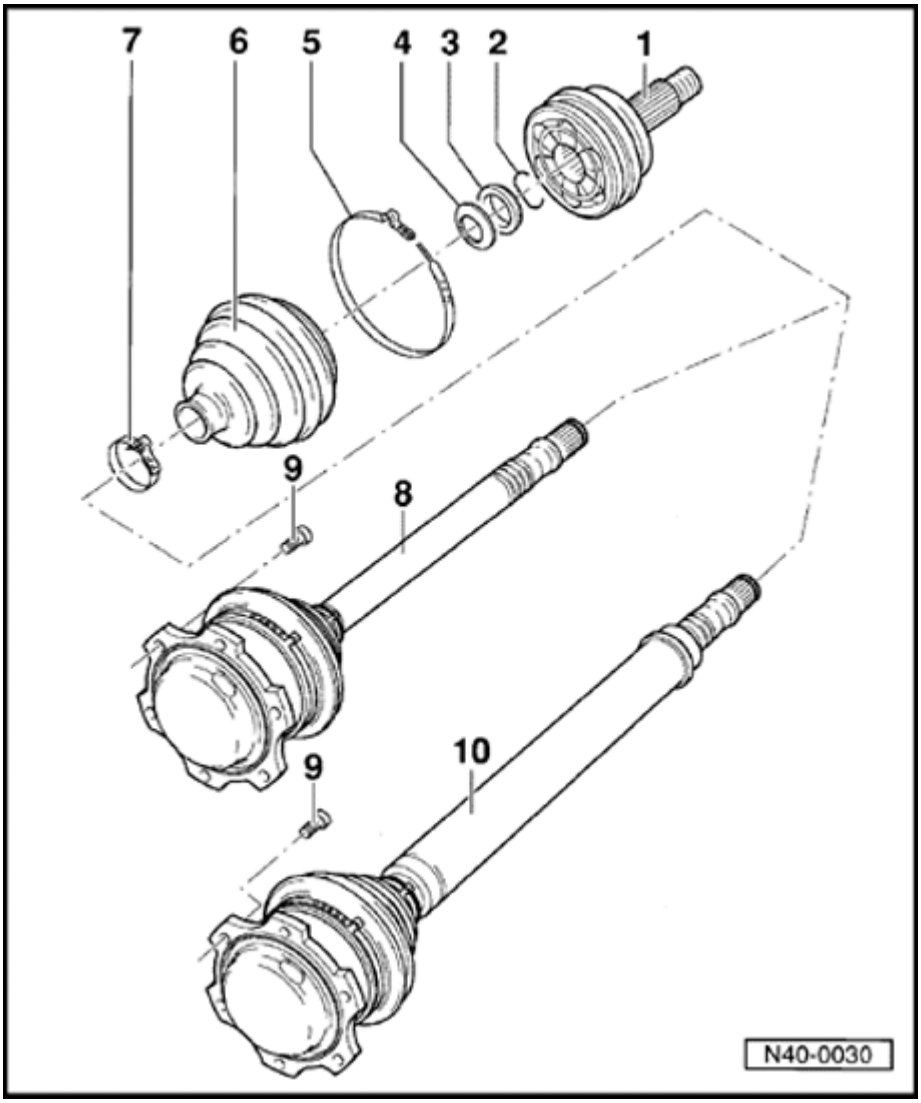

9 - Inner splined screw, 45 Nm (33 ft lb)

10 - Drive shaft, right, with inner tripod joint

- Repair of inner joint and replacement of boot not possible at this time
- Replace if damaged

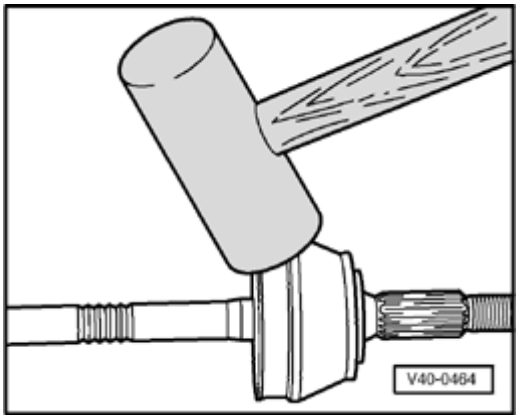

Fig. 1 Constant velocity joint, outer, removing

- Drive off from drive shaft with forceful blow using an alloy hammer.

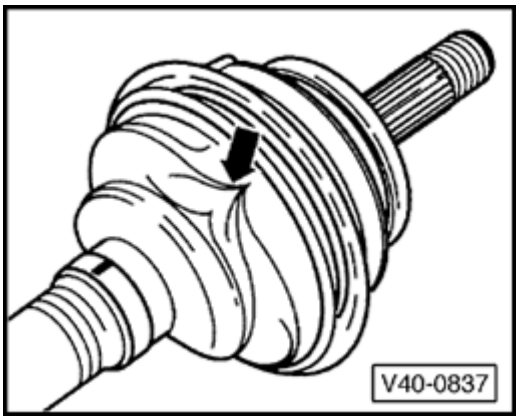

Fig. 2 Boot, ventilating

The boot is pressed on forcefully when installing on the joint body. This creates a vacuum in the boot that makes a dent during driving (arrow). Briefly ventilate the boot at the small diameter after installation to provide equalize pressure.

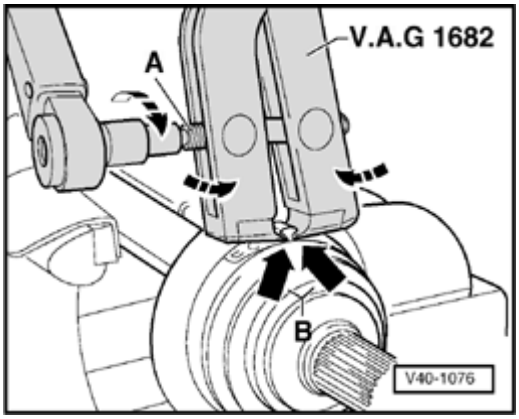

Fig. 3 Clamp, tightening on large diameter

- Install pliers VAG 1682 as in illustration. Make sure that the blades of the pliers lie in the corners (arrow -B-) of the clamp.
- Tighten clamp by turning the spindle with a torque wrench (do not tilt pliers during this process).

Note:

- *Because of the hard material (compared to rubber) of the boot and the stainless steel hose clamp that is necessary, only tighten the clamp with pliers VAG 1682.*
- *Tightening torque: 25 Nm (18 ft lb)*
- *Use torque wrench with adjustment range: 5 - 50 Nm (e.g. VAG 1331)*
- *Make sure that threads of spindle on the pliers are easy to move. If necessary lubricate with MoS_2 grease.*
- *If difficult to move, e.g. dirt in the threads, the required tightening force of the clamp is not achieved with the specified torque.*

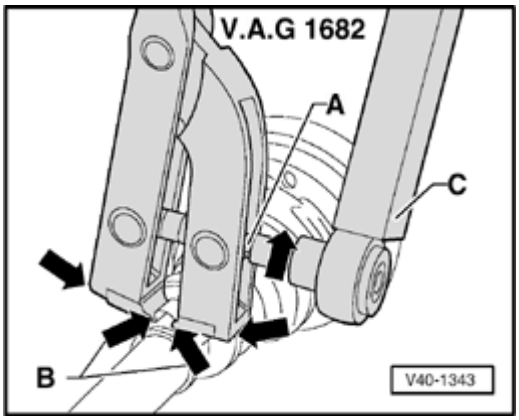

Fig. 4 Clamp, tightening on small diameter

Drive axle with triple-rotor joint, removing and installing

Removing right-side drive axle

The right drive axle removal instructions remain unchanged from the current repair manual procedure.

Removing left-side drive axle

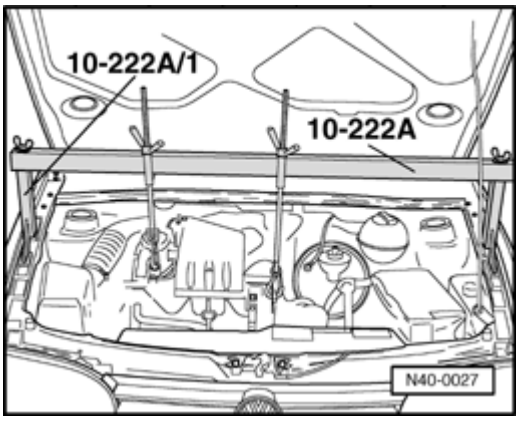

- Set up engine support bridge.

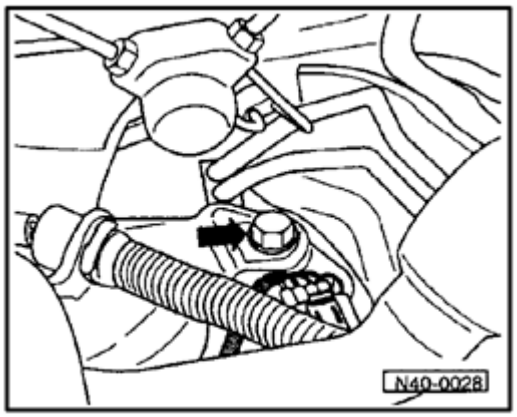

- Remove rear transmission mounting bolt (arrow).

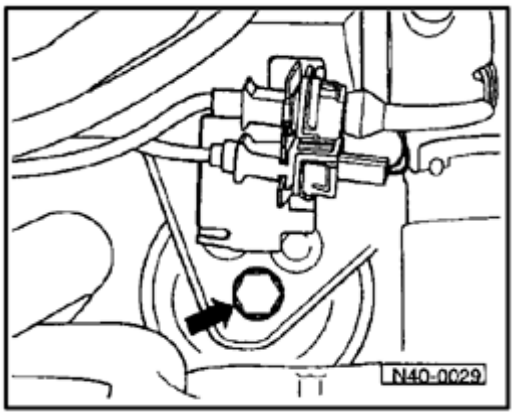

- Remove front engine mounting bolt (arrow).
- Lift engine/transmission assembly
- Loosen drive axle nut while vehicle is standing on its wheels.

- Disconnect drive axle from transmission drive flange.

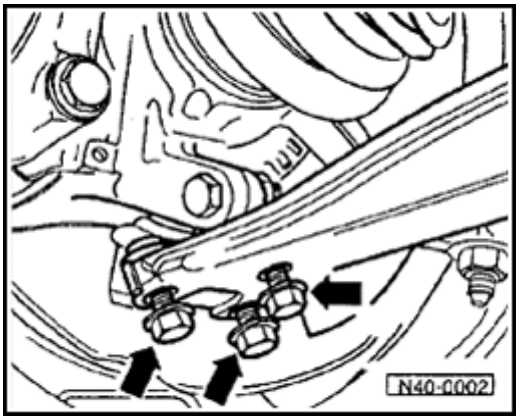

- Mark installation position of bolts (arrows) and remove.

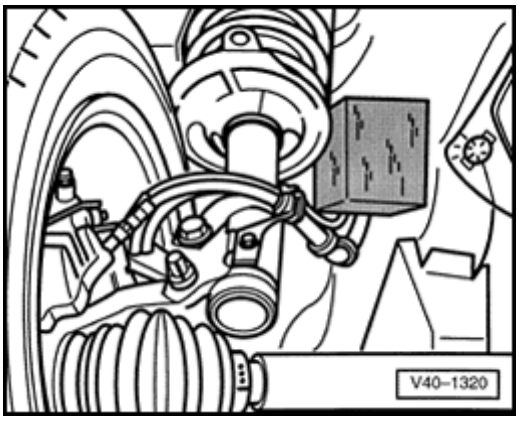

- Swing wheel outward (if necessary, place block of wood or equivalent between strut and wheel housing as shown).
- Push engine/transmission assembly toward front and remove drive axle.

Installing

- Install in reverse order of removal.

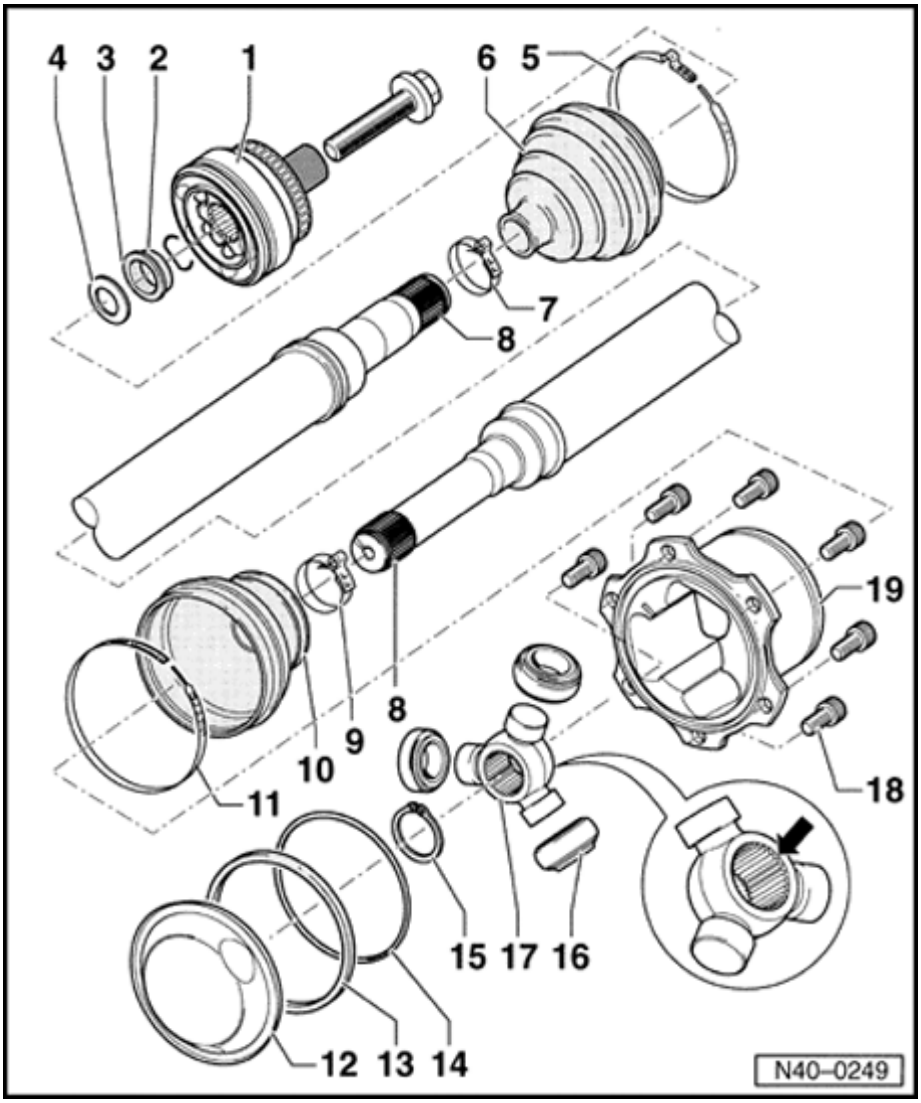

Drive axle with triple-rotor joint, servicing

1 - Outer constant velocity (CV) joint

- Replace complete part only
- Removing ⇒ Fig. 1
- Installing: drive onto shaft with plastic hammer until circlip seats (springs into groove)
- Greasing ⇒ page 40-12

2 - Circlip

- Always replace
- Insert in groove in shaft

3 - Thrust ring

4 - Belleville spring

- Larger diameter (concave side) contacts with thrust ring

5 - Clamp

- Always replace
- Tightening ⇒ page 40-7

6 - Boot

- Check for tears and chafing

7 - Clamp

8 - Axle shaft

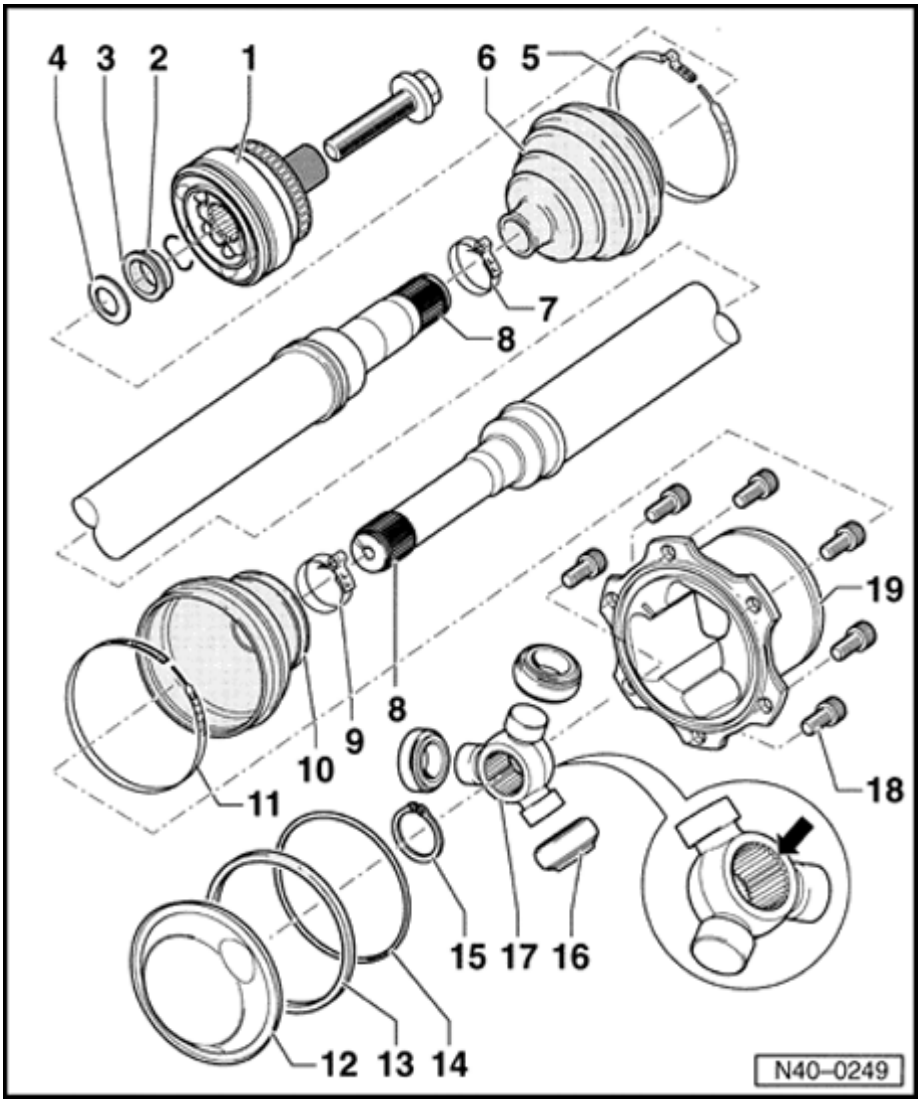

9 - Clamp

- For triple-rotor joint

10 - Boot

11 - Clamp

- For triple-rotor joint

12 - Cover

- Destroyed when disassembling
- No longer required for assembly; not available as replacement part

13 - Rectangular sealing ring

- Included in repair kit; not used in production

14 - O-ring

- Not required for assembly

15 - Circlip

16 - Roller

17 - Triple-rotor star

- Chamfer -arrow- goes onto axle shaft splines first

18 - Multi-point socket-head bolt

- M10 x 20
- 80 Nm (59 ft lb)

19 - Housing

40-75

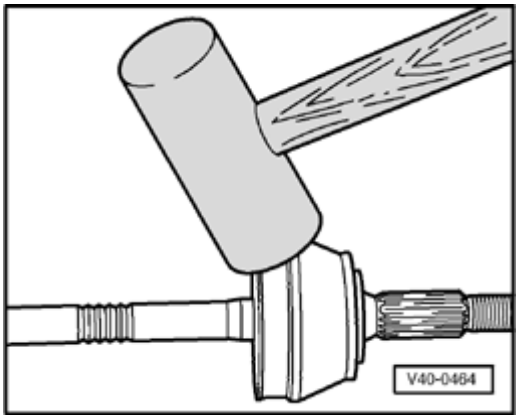

Fig. 1 Removing outer CV joint

- Drive joint off axle shaft with firm blow from soft mallet.

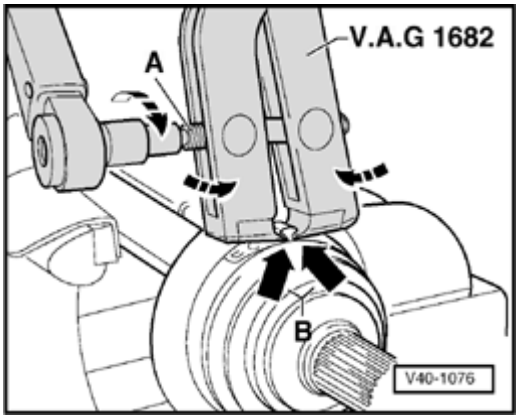

Fig. 2 Tightening outer CV joint boot clamp

- Position VAG 1682 pliers or equivalent (e.g. Snap-On YA 3080) as shown in illustration.

Make sure plier jaws seat in grooves of clamp (arrows -B-)

- Tension clamp by using torque wrench to turn spindle (keep pliers at right angle to shaft).

Tightening torque: 20 Nm (15 ft lb)

Note:

- *Due to the hardness of the boot material (compared to rubber), it is necessary to use a stainless steel clamp. The clamp can only be properly tightened using VAG 1682 pliers.*
- *Use a torque wrench with 5-50Nm (4-37 ft lb) range (e.g. VAG 1331 or equivalent).*
- *Make sure that the spindle threads of the pliers are not tight. If necessary coat the threads with MoS_2 grease to ensure smooth operation.*
- *If the spindle threads are tight (e.g. dirty) the force necessary for correctly tightening the clamp will not be achieved, despite correct torque readings.*

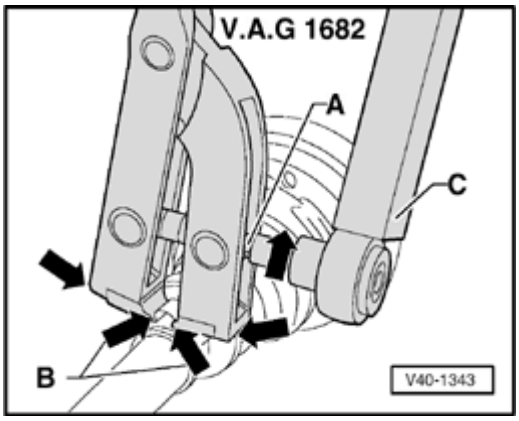

Fig. 3 Tightening small end clamp

Triple-rotor joint, disassembling

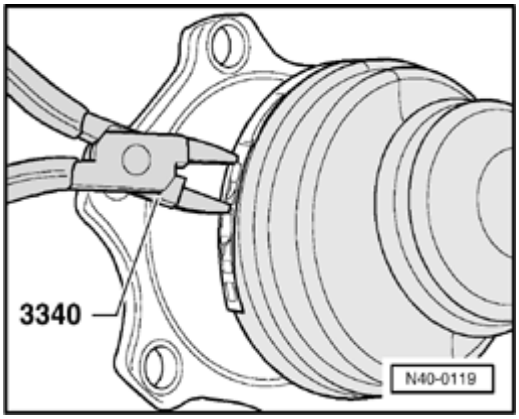

- Open hose clamp
- Open clamp on shaft small end and push back boot.

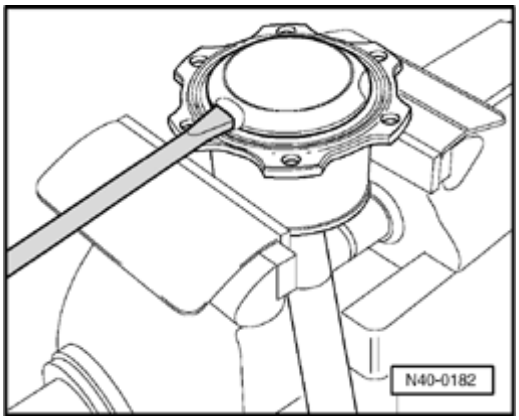

- Drive screwdriver or similar tool into cover and pry open.

Note:

- *If the cover will not pry open, insert screwdriver and pry from the opposite side.*
- *The cover is destroyed in the removal process. It does not need to be replaced.*

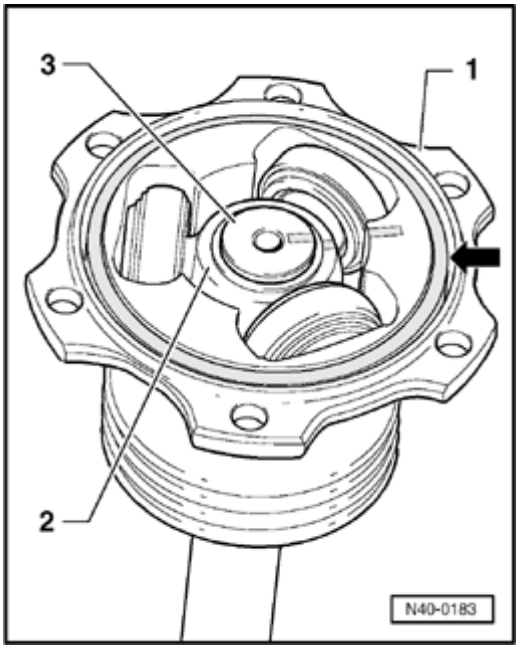

- Remove O-ring -arrow- from groove.
- Mark installation positions of parts -1-, -2- and -3-.

1 - Triple-rotor joint housing

2 - Triple-rotor star

3 - Axle shaft

Note:

- *Noises while driving may result if the indicated parts are not reassembled to their prior positions.*
- *Use a waterproof felt-tipped pen for marking parts.*

- Remove rubber gasket (arrow) from groove.
- With triple-rotor joint housing clamped in vise, pull axle shaft together with triple-rotor star upward out of housing.

CAUTION!

Do not let the rollers slide off the triple-rotor star and fall to the floor.

- Hold axle shaft in straight alignment to triple-rotor joint and slowly push back triple-rotor joint housing with other hand.

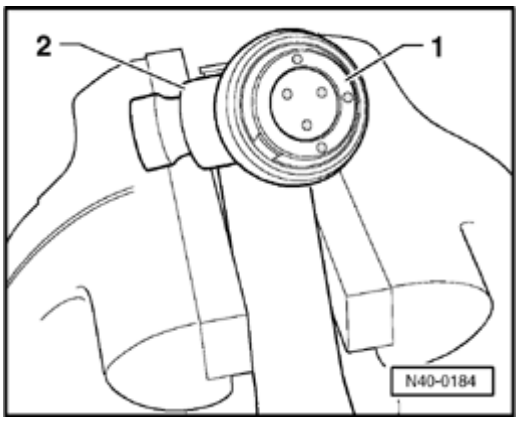

- Mark installation position of rollers -1- on triple-rotor star -2- using felt-tipped marker.

- Remove rollers and place on clean surface.

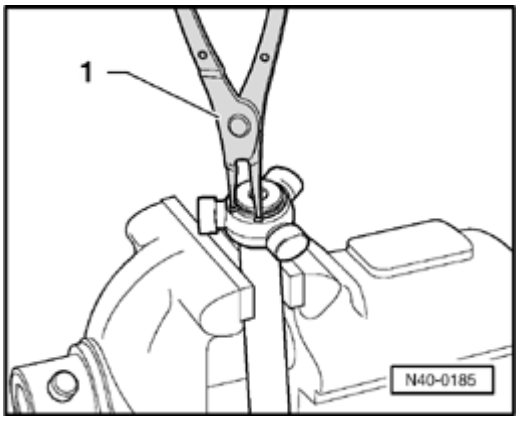

- Remove circlip.

-1- Pliers Commercially available

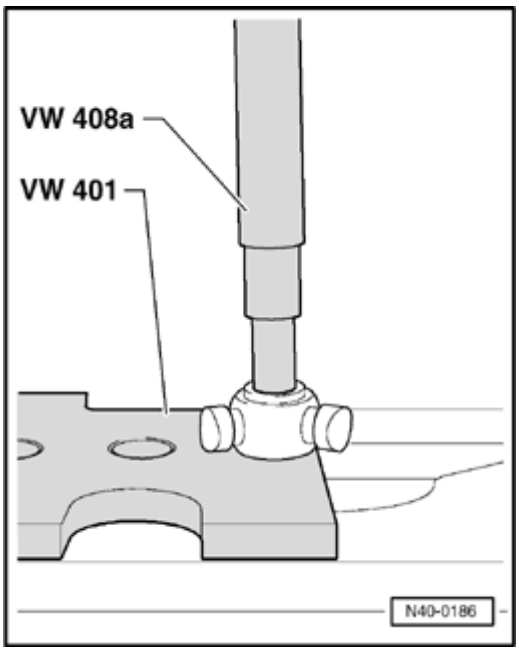

- Press triple-rotor star off axle shaft.
- Pull triple-rotor joint housing off axle shaft.
- Clean shaft and triple-rotor joint housing.

Triple-rotor joint, assembling

- Slide small diameter boot clamp onto shaft.
- Slide triple-rotor joint boot onto shaft.
- Slide triple-rotor joint housing onto shaft.

Mounting triple-rotor star

Note:

The side of the star with a chamfer (arrow) goes onto the axle shaft splines first.

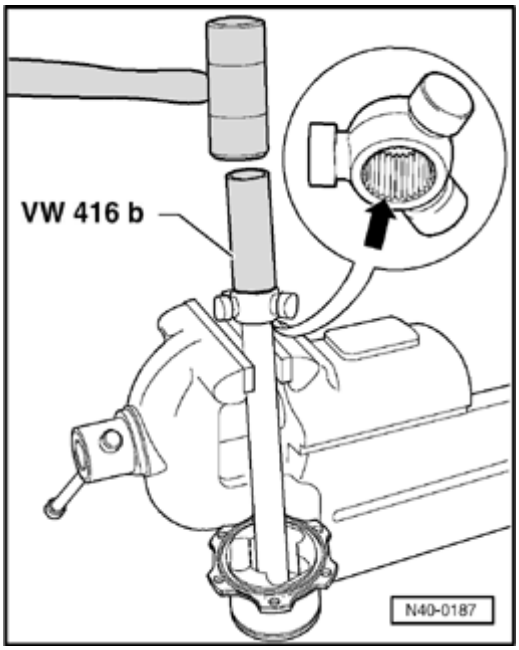

- Place triple-rotor star on axle shaft according to previously marked position.
- Install circlip and make sure that it is correctly seated.
- Install rollers according to previously marked positions.
- Push triple-rotor joint housing over rollers and secure (clamp housing in vise).

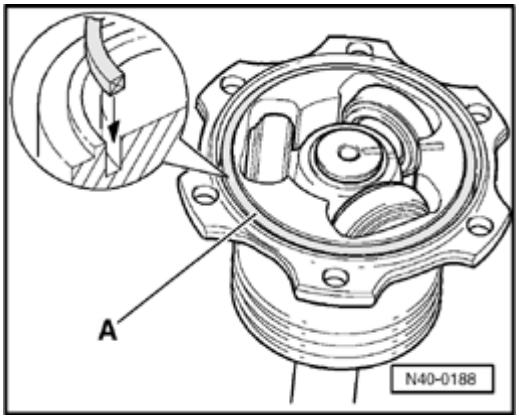

- Install rectangular sealing ring (arrow) from repair kit.

Note:

A seal is formed directly between the triple-rotor joint and the drive flange by the rectanular sealing ring. The cover is no longer required.

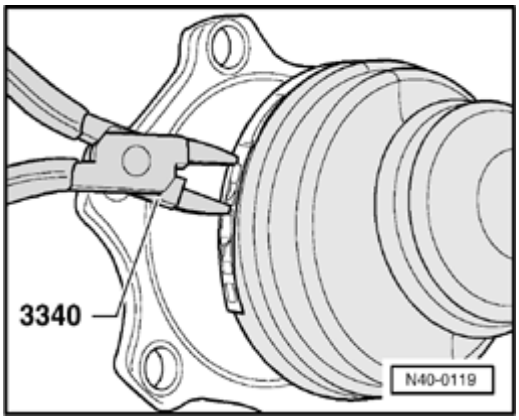

- Press 180 grams of axle shaft grease from repair kit into triple-rotor joint .

90 grams into joint and 90 grams behind joint

- Install triple-rotor joint boot.
- Install boot clamp.

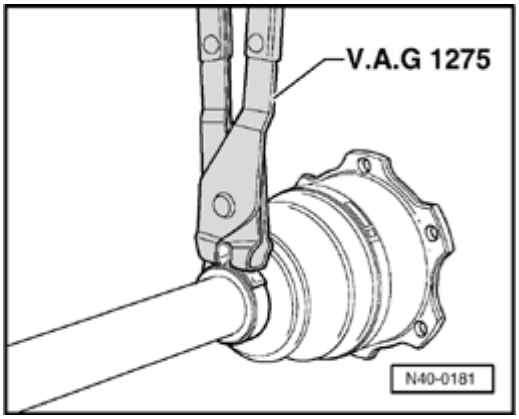

- Tighten small diameter clamp with VAG 1275 pliers or equivalent (e.g. KD 474).

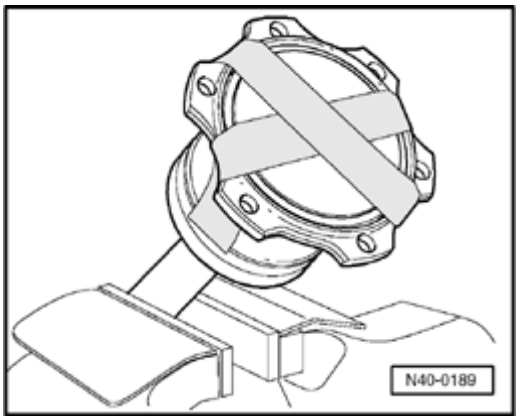

CAUTION!

- ***Secure the triple-rotor joint with tape so that the housing is not inadvertently pushed back when installing the axle shaft.***
- ***Remove tape just prior to bolting to drive flange.***

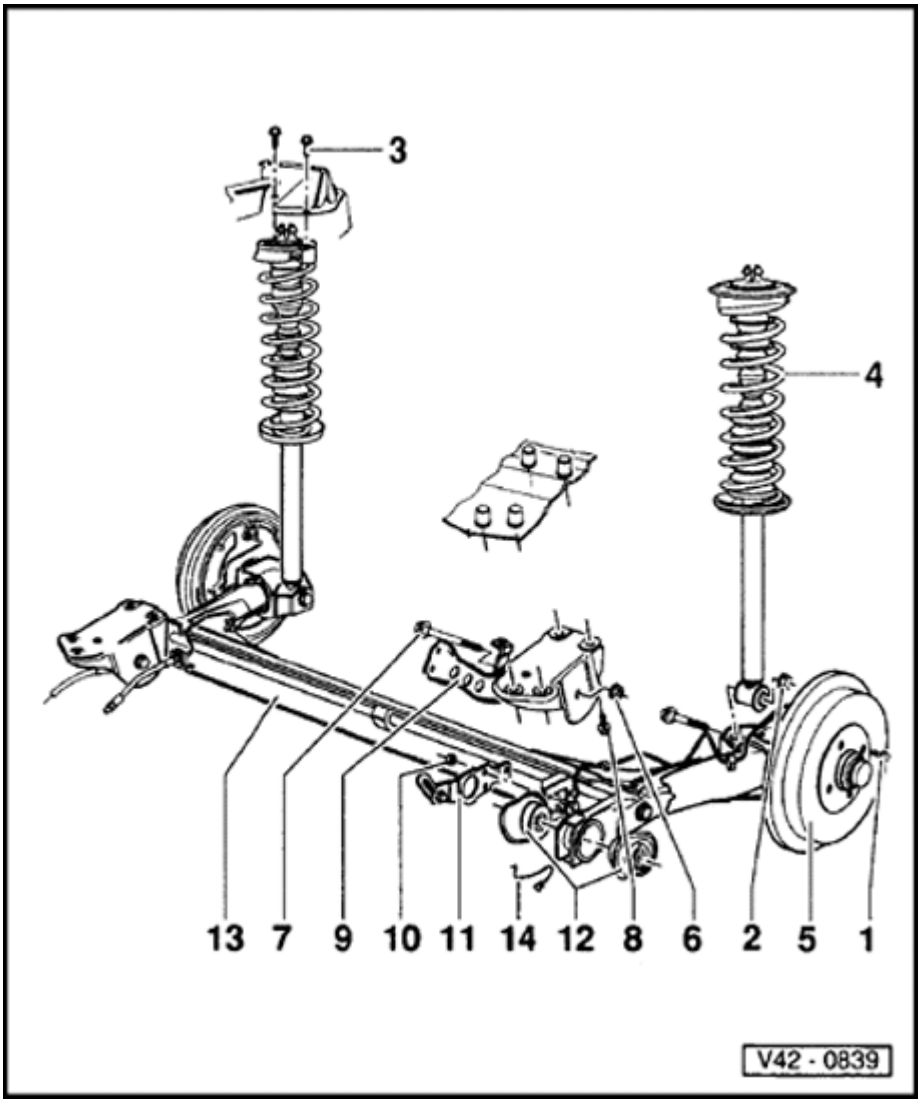

Rear Wheel Suspension, Shafts and Axle

Rear axle, servicing (vehicles with front wheel drive)

Note:

- *The rear axle and wheel bearings are identical on Base and Plus suspension versions.*
- *Welding and straightening of the axle beam is not permissible.*

1 - Wheel bolt 110 Nm (81 ft lb)

2 - Self-locking hex nut, 70 Nm (52 ft lb)

- When tightening the nut the axle beam must be in the horizontal position (unladened vehicle state)

3 - Hex bolt, 25 Nm (18 ft lb)

4 - Suspension strut

- Removing and installing ⇒ Fig. 1 to ⇒ Fig. 3
- Disassembling and assembling ⇒ Page 42-9

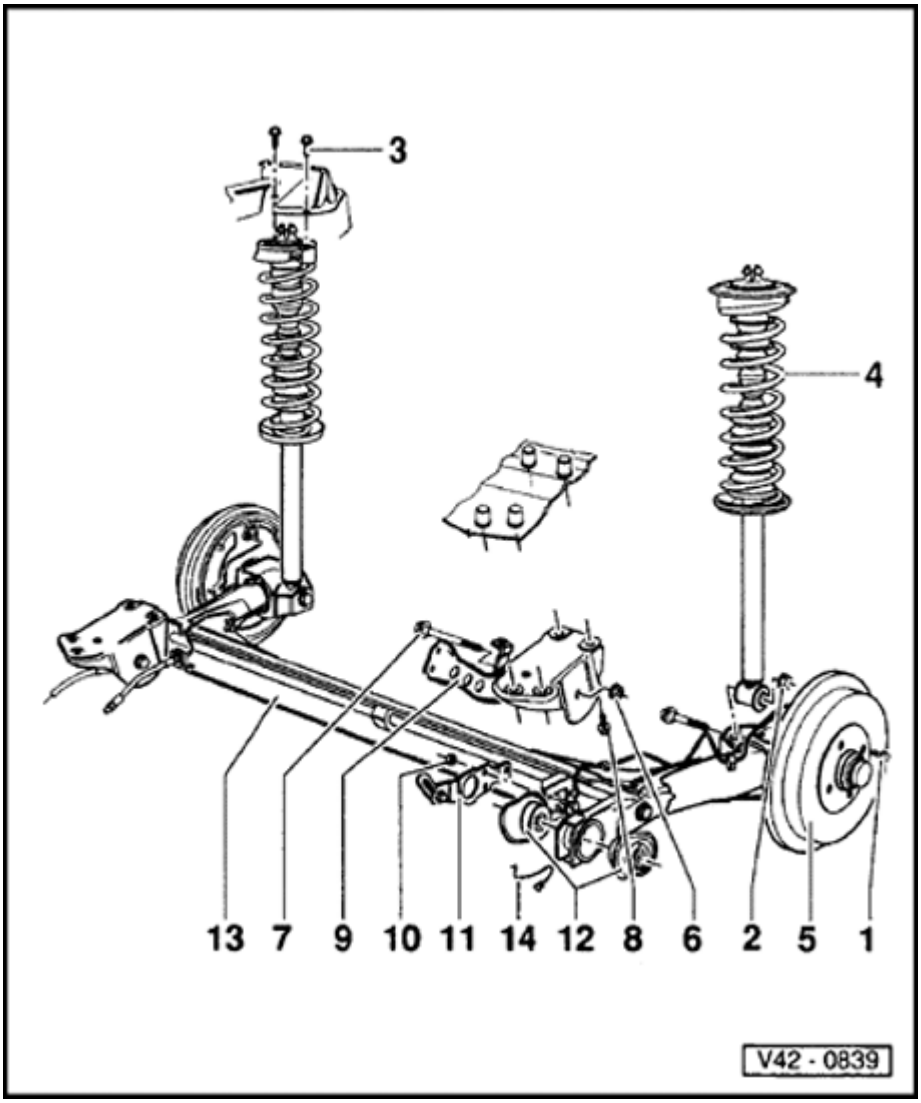

5 - Wheel bearing

- Servicing Vehicles with drum brakes ⇒ Page 42-15
- Vehicles with disc brakes ⇒ Page 42-24

6 - 80 Nm (59 ft lb)

- Use only self-locking nuts with captive washers
- When tightening nut, the axle beam must be in the horizontal position (unladened vehicle state)

7 - Hex bolt

- Installed from center of vehicle

8 - Shouldered bolt, 70 Nm (52 ft lb)

- If threads are damaged, rework captive nut in side member ⇒ Page 42-7

42-3

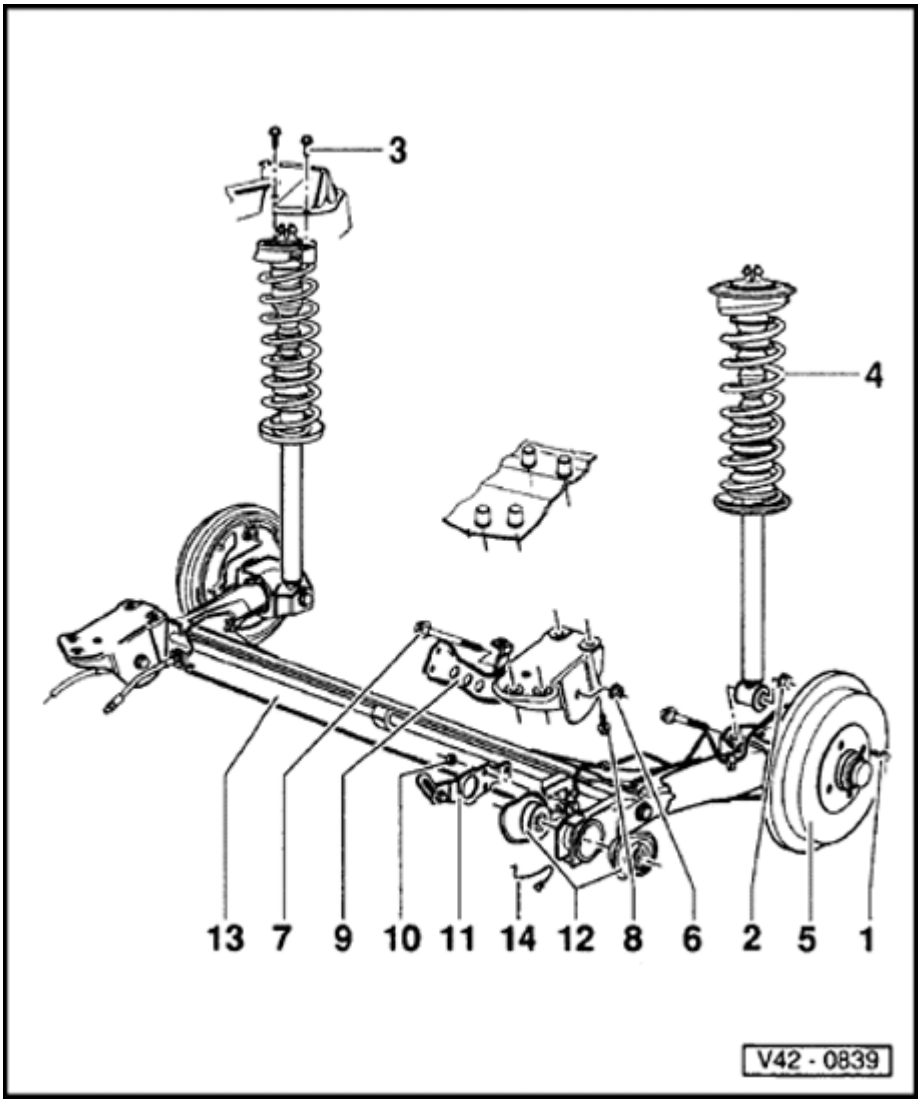

9 - Mounting bracket with retainer for brake pressure regulator

- Installation position ⇒ Fig. 4
- Check and if necessary adjust rear axle total toe after installation
- If possible do not loosen when removing the rear axle

10 - Hex nut/washer, 35 Nm (26 ft lb)

11 - Regulator spring bracket

12 - Bonded rubber mounting

- Note installation position ⇒ Fig. 7
- Pressing out ⇒ Fig. 5 and ⇒ Fig. 6
- Pressing in ⇒ Fig. 8
- Only replace as pair

13 - Axle beam

- Stub axle contact surfaces and threaded holes are to be free of paint and dirt

14 - Parking brake cable bracket

42-4

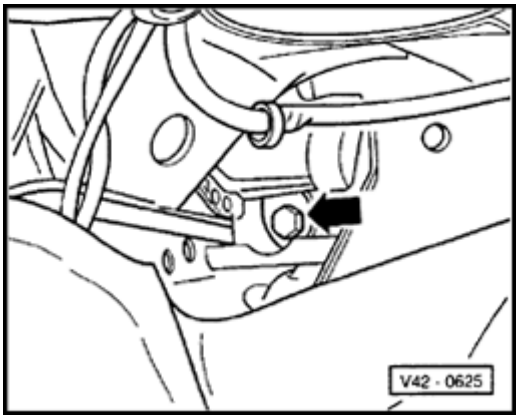

Fig. 1 Suspension strut at body, removing and installing

- Removing and installing inertia reel cover

⇒ *Repair Manual, Body Exterior, Interior, Repair Group 70.*

- Removing and installing inertia reel

⇒ *Repair Manual, Body Exterior, Interior, Repair Group 68.*

Inertia reel bolt (arrow) tightening torque: 40 Nm (30 ft lb)

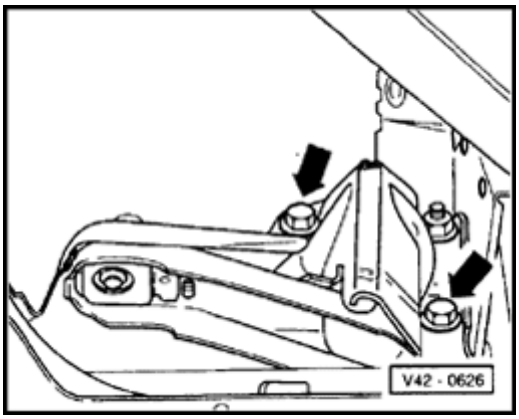

Fig. 2 Suspension strut at body, removing and installing

Remove and install both securing bolts (arrows) from interior of vehicle (viewed through rear left side window).

Tightening torque: 25 Nm (18 ft lb)

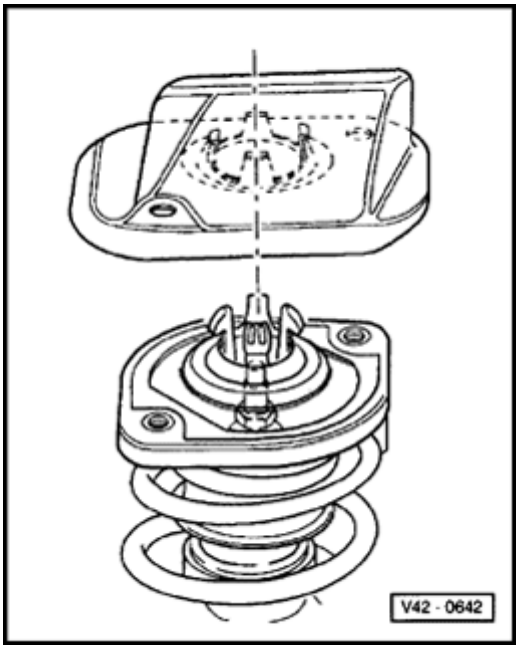

Fig. 3 Suspension strut, removing and installing

Suspension strut is attached to the body by 4 retaining lugs in addition to the bolts. To remove, turn suspension strut until retaining lugs are positioned above the cut-outs.

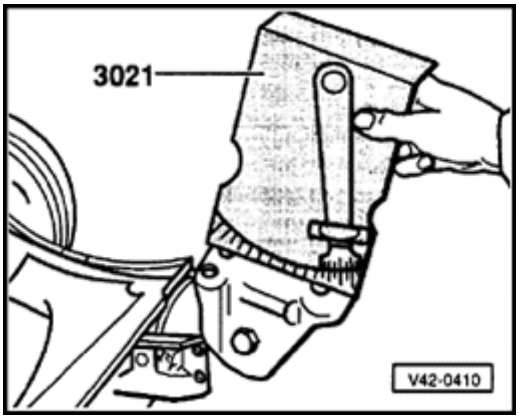

Fig. 4 Bolting mounting bracket to axle beam

Angle of inclination to axle beam 13° 30 ± 1°.

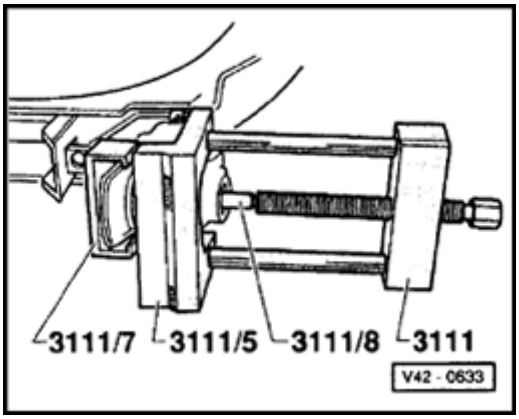

Fig. 5 Bonded rubber mounting, pressing 1st half out of axle beam

Note:

Before using special tool 3111 it is important to grease spindle with Molybdenum grease.

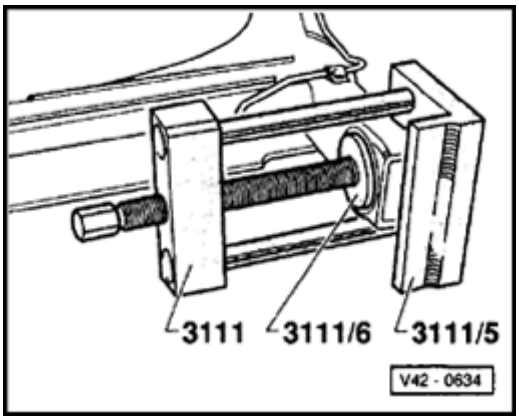

Fig. 6 Bonded rubber mounting, pressing 2nd half out of axle beam

Thread base plate into the pressure plate 3111/5 from the opposite side.

Note:

Mounting must not be driven out. Otherwise the mounting seat will be widened and a tight seating of the new mounting cannot be assured.

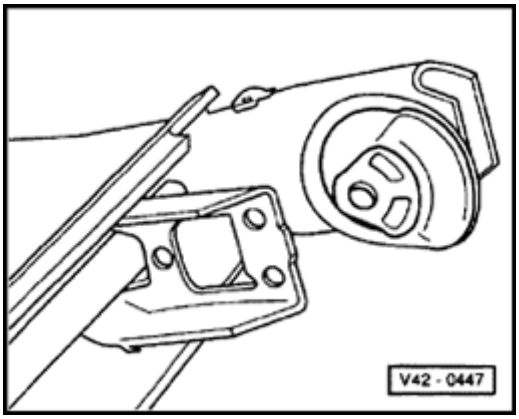

Fig. 7 Rubber bonded mounting, installation position

Protruding segment of bonded rubber mounting faces forward on inside and rearward on outside.

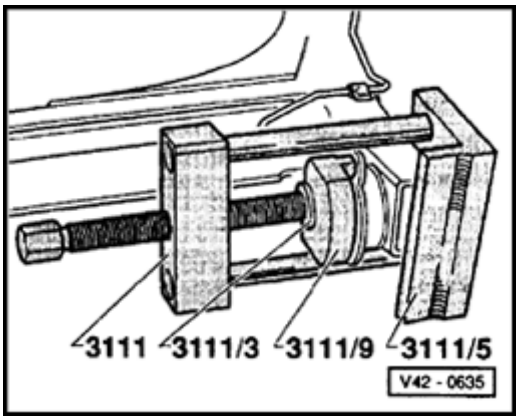

Fig. 8 Rubber bonded mounting, presssing into axle beam

Press both halves in one after the other until the mounting conical section contacts the axle beam.

Reworking cap nut in side member (front wheel drive vehicles)

If the threads of the cap nut in the side member are damaged, it must either be retapped or the cap nut must be drilled out. When drilling out proceed as follows:

- Remove rear axle.

- Drill through damaged cap nut in the side member using a 10.2 mm diameter drill from underneath.

Note:

Do not tilt the drill when drilling.

WARNING!

Wear protective goggles.

- Cut new thread in the cap nut, M 12 x 1.5.

- Use new bolts, Part No. N 010.127.4 (M 12 x 1.5 x 30), and washer, Part No. N 011.531.7, to secure the rear axle.

Tightening torque: 70 Nm (52 ft lb)

Note:

The procedure described here must only be performed on one cap nut on each side of the vehicle.

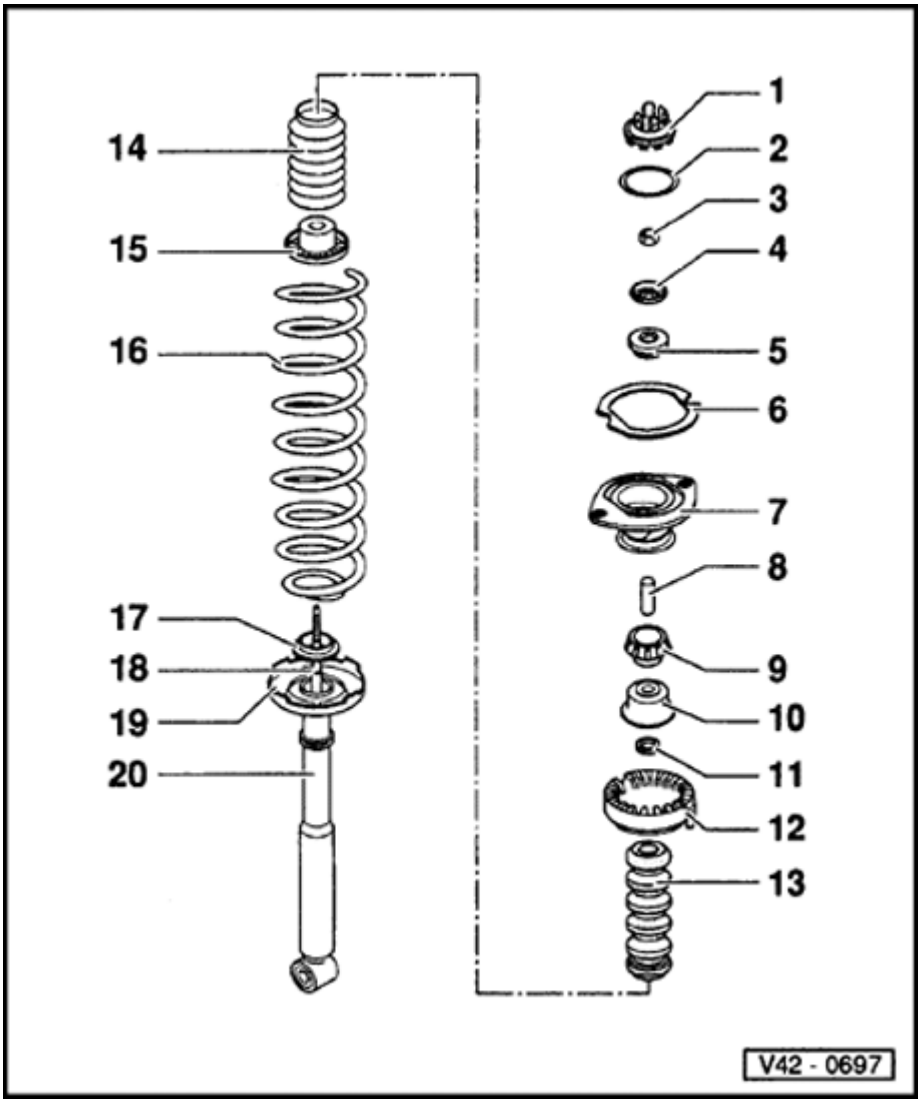

Suspension strut, disassembling and assembling (front wheel drive vehicles)

1 - Cap

- Pry out with screwdriver
- Pressing on ⇒ Fig. 4

2 - O-ring

3 - Self-locking hex nut, 25 Nm (18 ft lb)

4 - Dished washer

5 - Upper rubber mounting

6 - Gasket (foam)

- Always replace

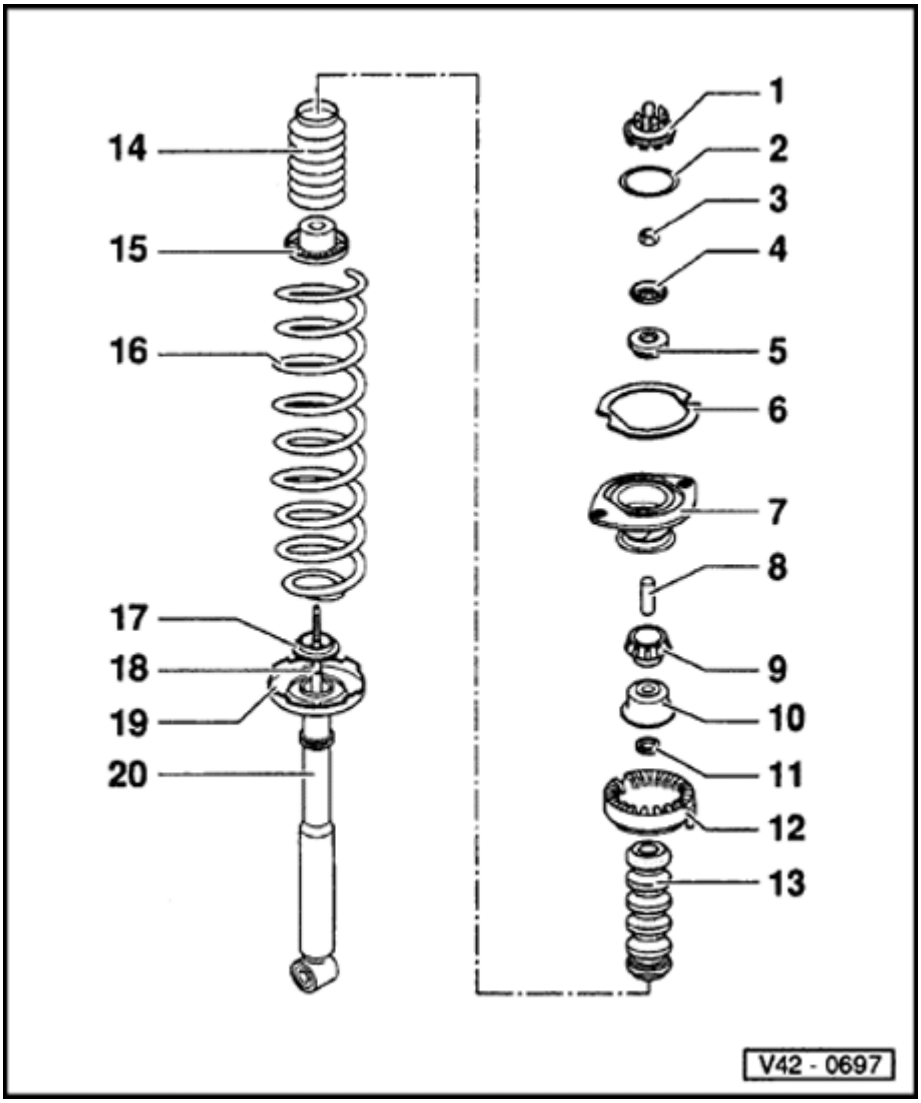

7 - Suspension strut bearing

- Always replace foam gasket
- Welded nuts must be located in the spring seat recesses
- Align welded nuts and cap to shock absorber lower bushing ⇒ Fig. 3

8 - Spacer tube

9 - Lower rubber mounting

10 - Metal cap

- Higher on Wagon than Sedan

11 - Washer

12 - Spring seat

- Thinner on Wagon than Sedan
- Installation position ⇒ Fig. 2

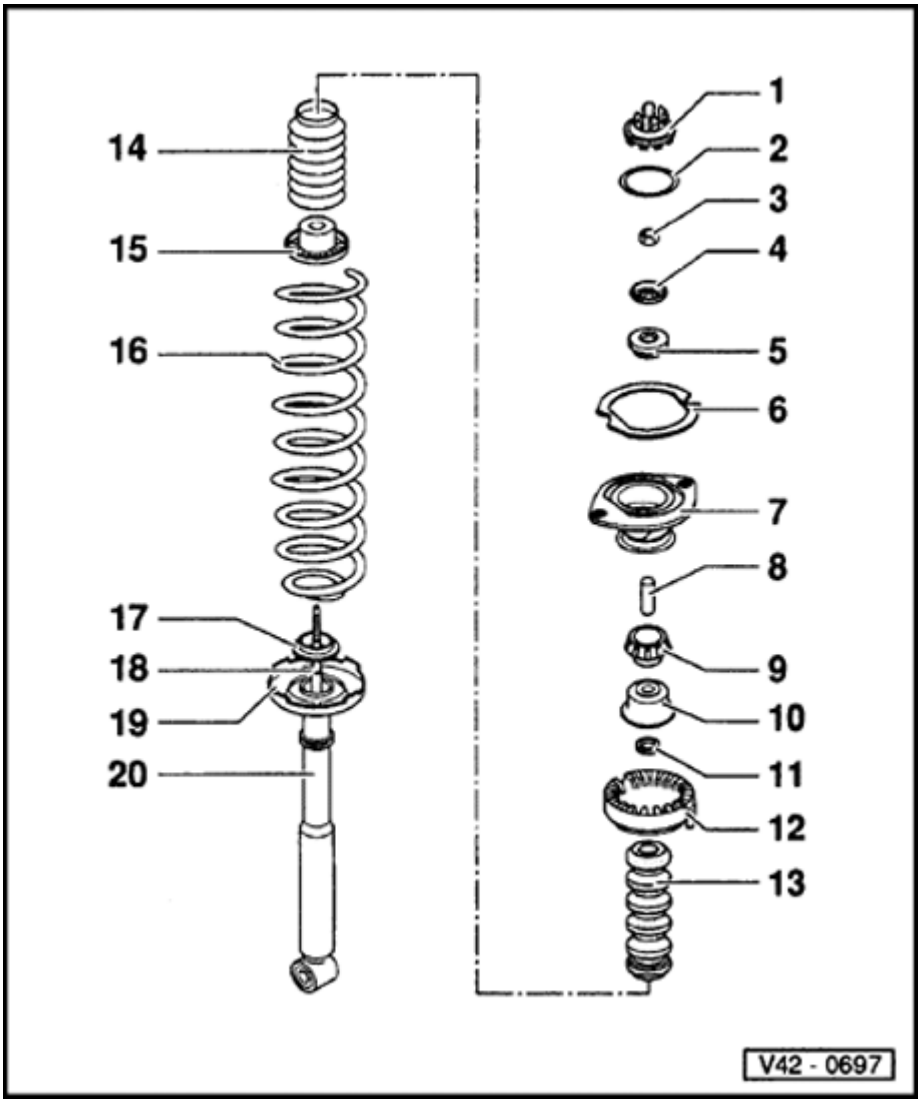

13 - Stop buffer

- Shorter on Wagon than Sedan

14 - Protective tube

- Longer on Wagon than Sedan

15 - Plastic cap

16 - Coil spring

- Removing and installing ⇒ Fig. 1
- Allocation ⇒ Parts catalog
- Wagon has protective hose at top

17 - Packing

18 - Circlip

19 - Lower spring plate

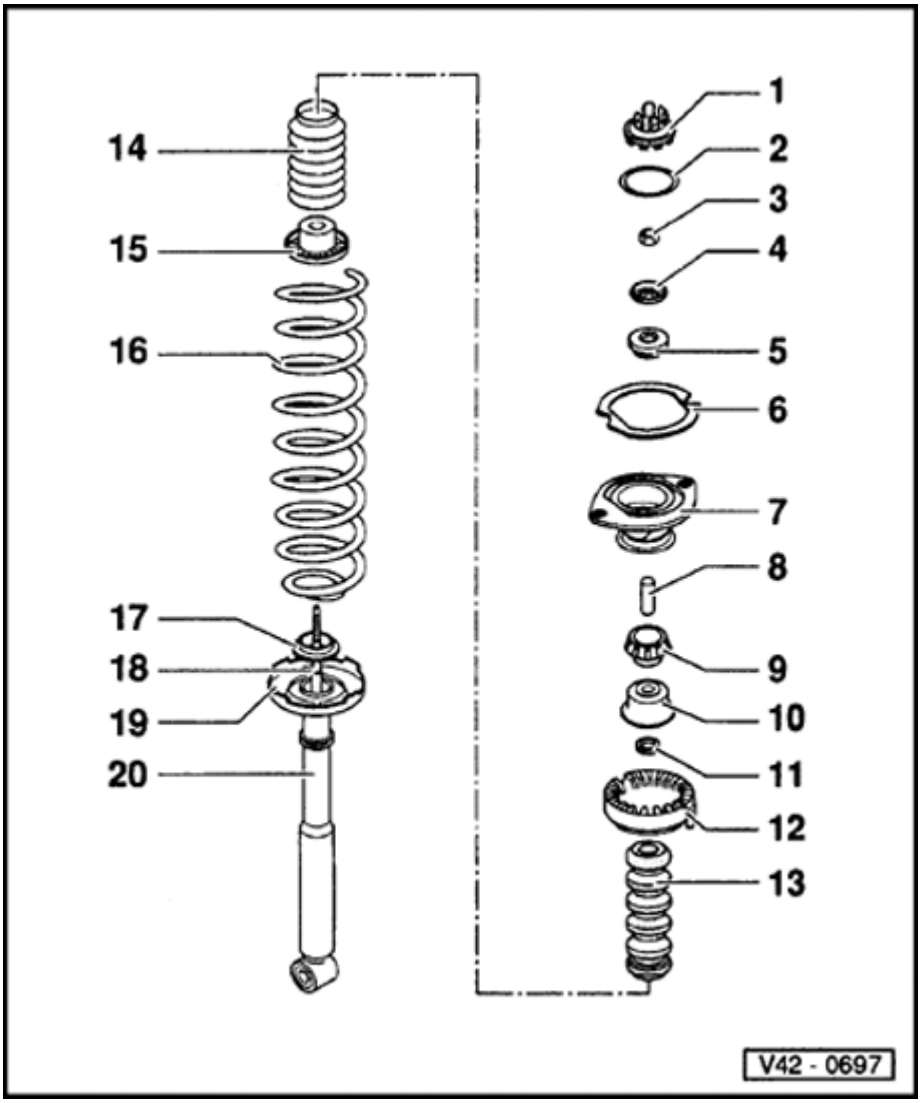

20 - Shock absorber

- Can be replaced individually
- Removing and installing ⇒ Page 42-4
- Application see Parts catalog

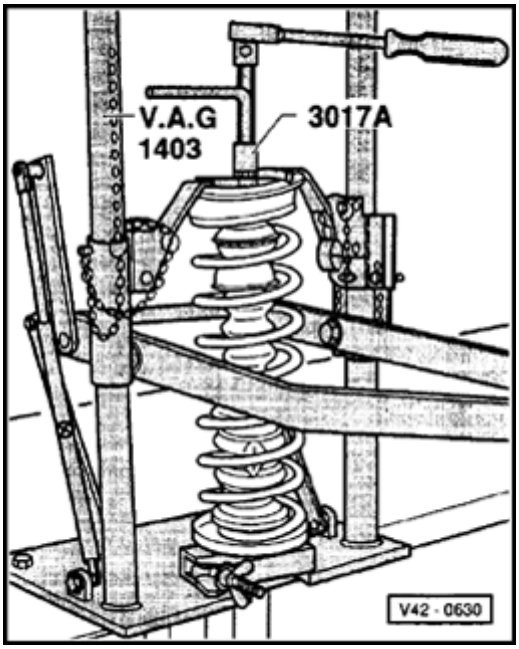

Fig. 1 Spring, removing and installing

Note:

Instead of VAG 1403, VAG 1752/1 may be used.

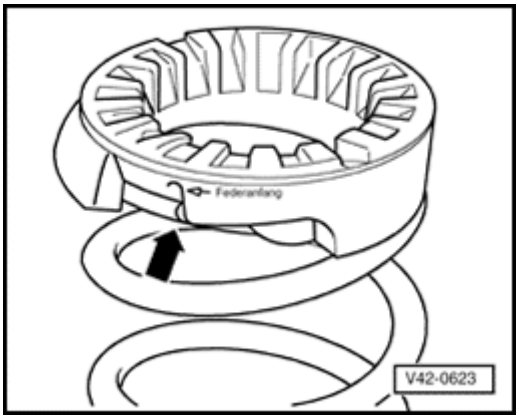

Fig. 2 Spring seat, installation position

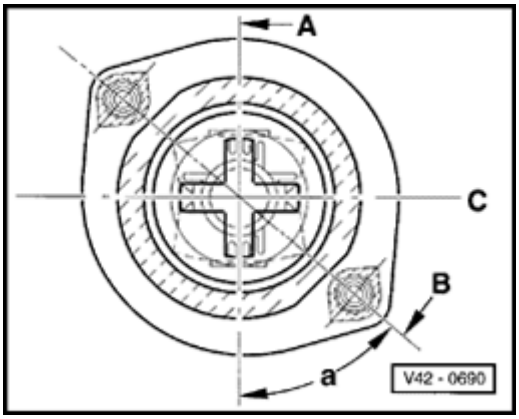

Fig. 3 Suspension strut mounting to shock absorber bushing, aligning

A - Shock absorber bushing axis

B - Suspension strut mounting axis

"a" 50°

C - Cap axis 90° offset to shock absorber bushing axis -A-.

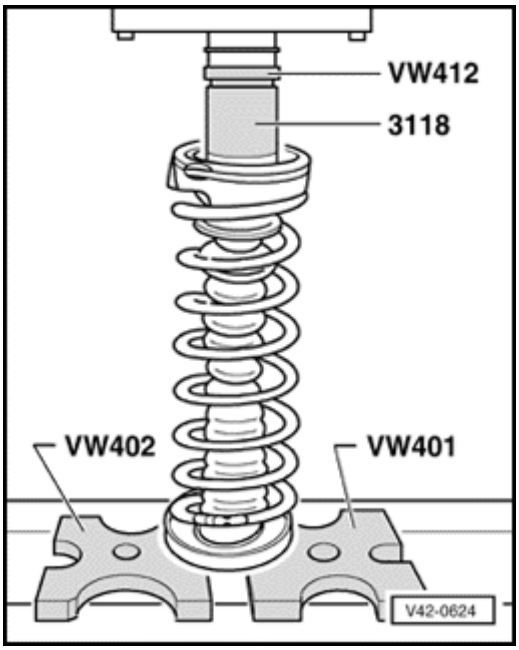

Fig. 4 Cap in suspension strut mounting, pressing in.

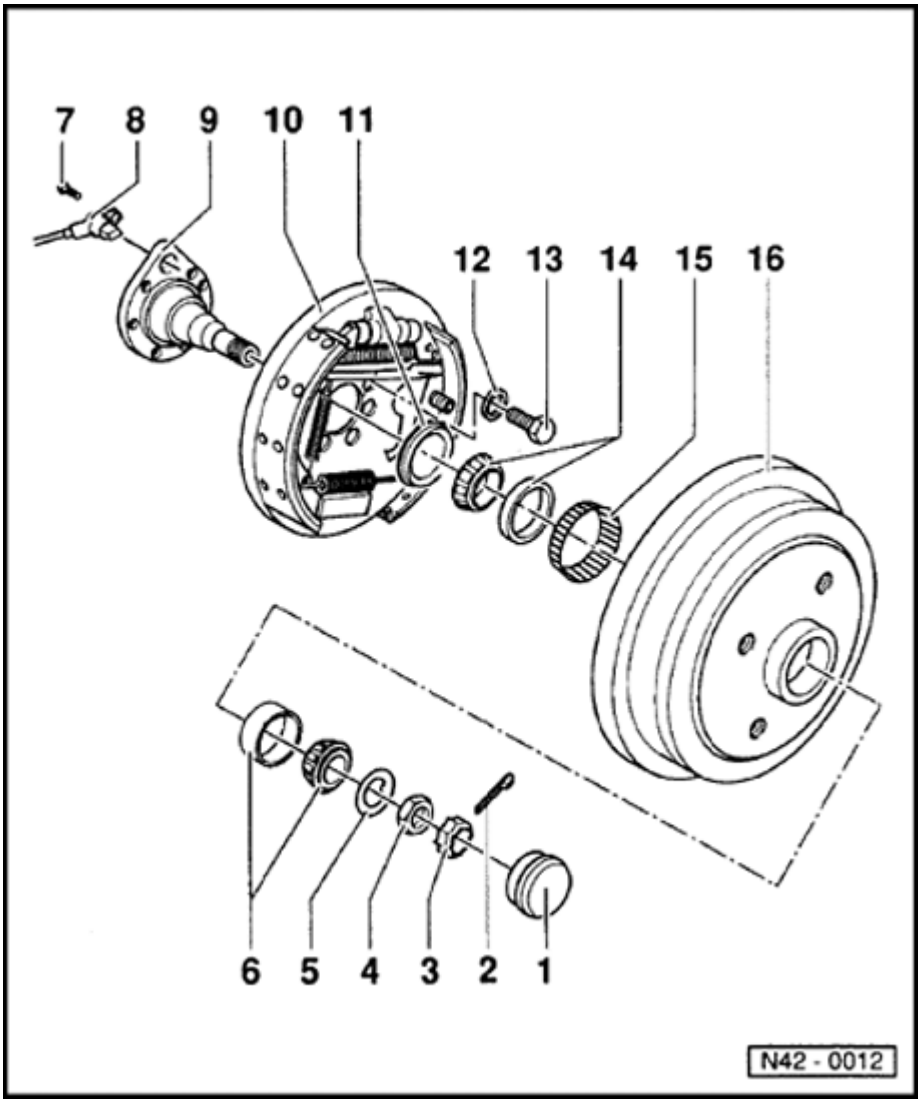

Wheel bearings, servicing

Drum brakes (front wheel drive vehicles), wheel bearings, servicing

Note:

Careful sealing, absolute cleanliness and precise adjustment are requirements for long wheel bearing service life. Therefore note the following points:

- *Install oil seal and grease cap as shown.*
- *Only reinstall clean bearings, do not wash bearings.*
- *Adjust wheel bearing play carefully.*

1 - Grease cap

- Pressing off ⇒ Fig. 1 and ⇒ Fig. 2
- Driving in ⇒ Fig. 3

42-16

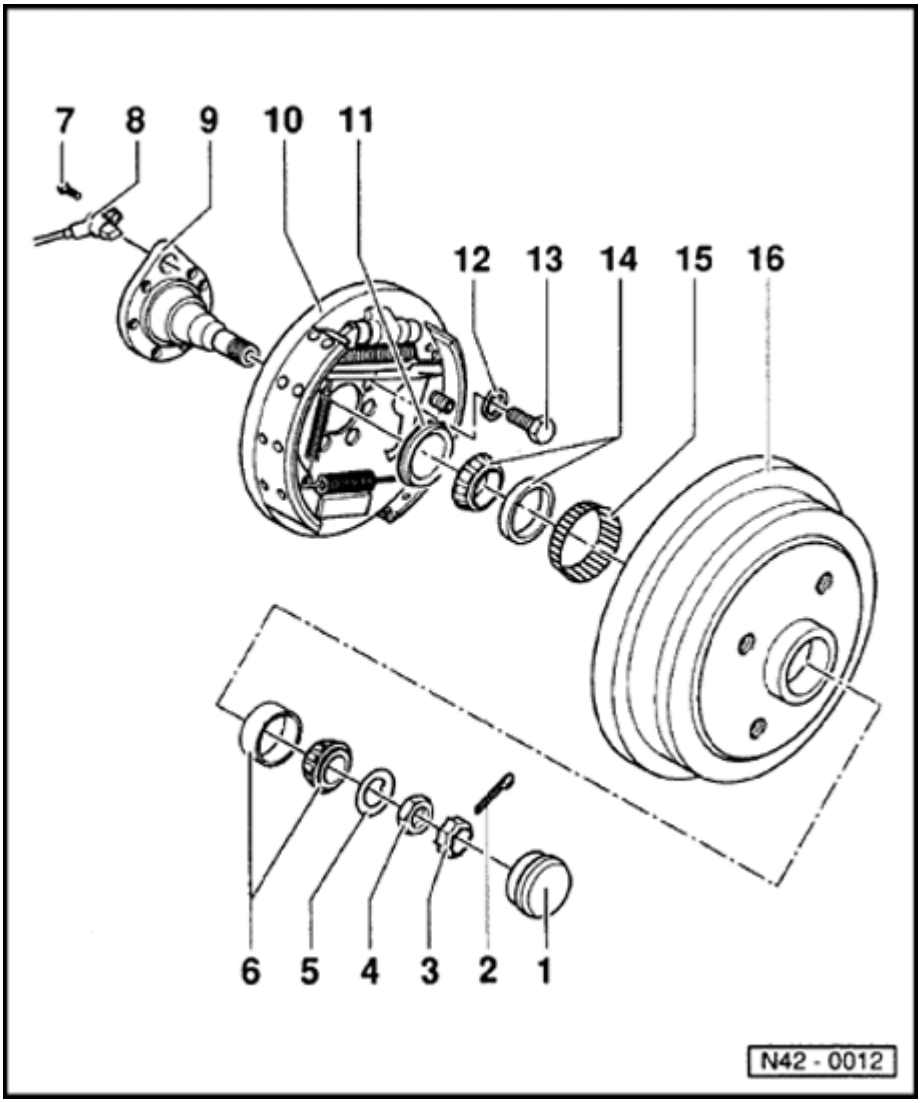

2 - Cotter pin

- Always replace

3 - Locking ring

4 - Hex nut

- Adjusting wheel bearing play ⇒ Fig. 4

5 - Thrust washer

6 - Outer wheel bearing

- Drive out outer race with copper drift
- Pressing in ⇒ Fig. 6

7 - Hex socket head bolt, 10 Nm (7 ft lb)

8 - Speed sensor

- Only on vehicles with ABS

9 - Stub axle

- Straightening operations are not permitted!

42-17

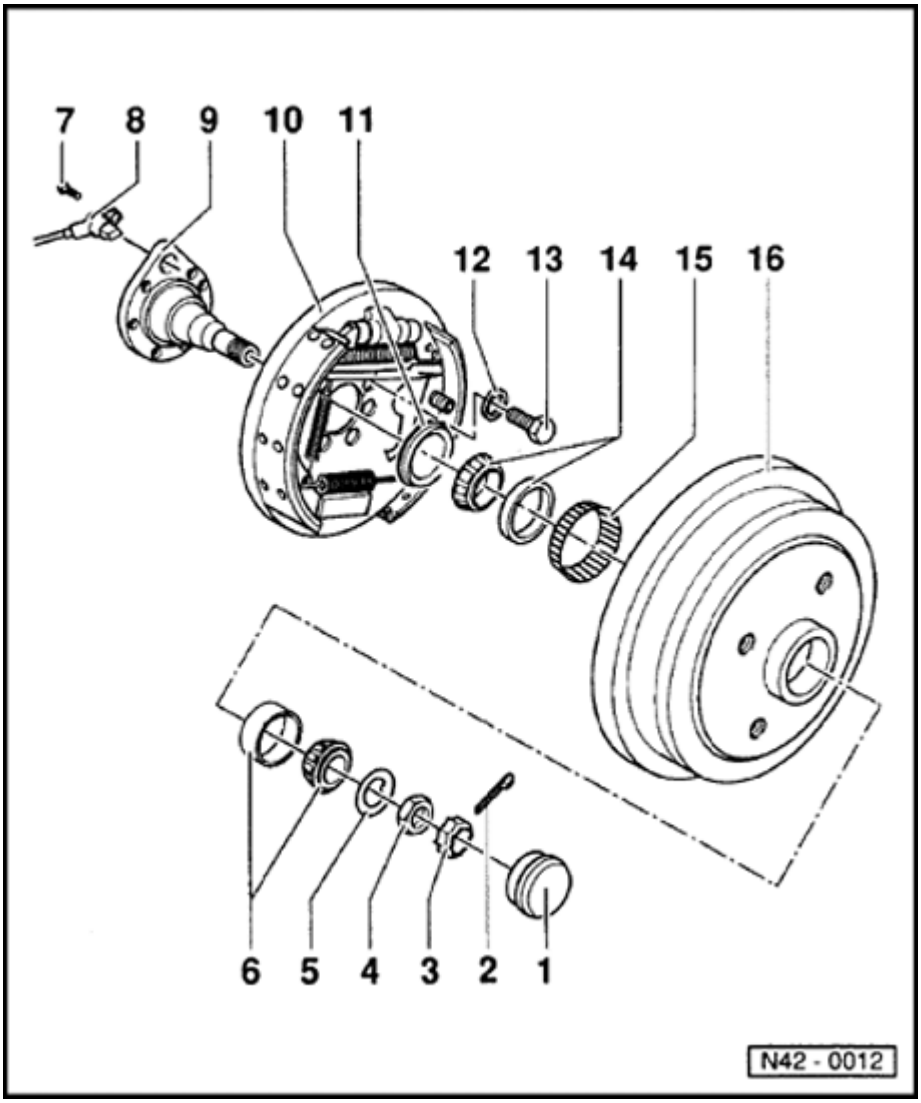

10 - Brake backing plate

- Bolt together with stub axle onto rear axle

11 - Oil seal

- Fill between sealing lips with multi-purpose grease.
- Driving in ⇒ Fig. 8

12 - Dished washer

- Larger contact surface (concave side) to brake backing plate

13 - Hex bolt, 60 Nm (44 ft lb)

14 - Inner wheel bearing

- Drive out outer race with copper drift
- Pressing in ⇒ Fig. 7

15 - Speed sensor rotor

- Pressing on ⇒ Fig. 9

42-18

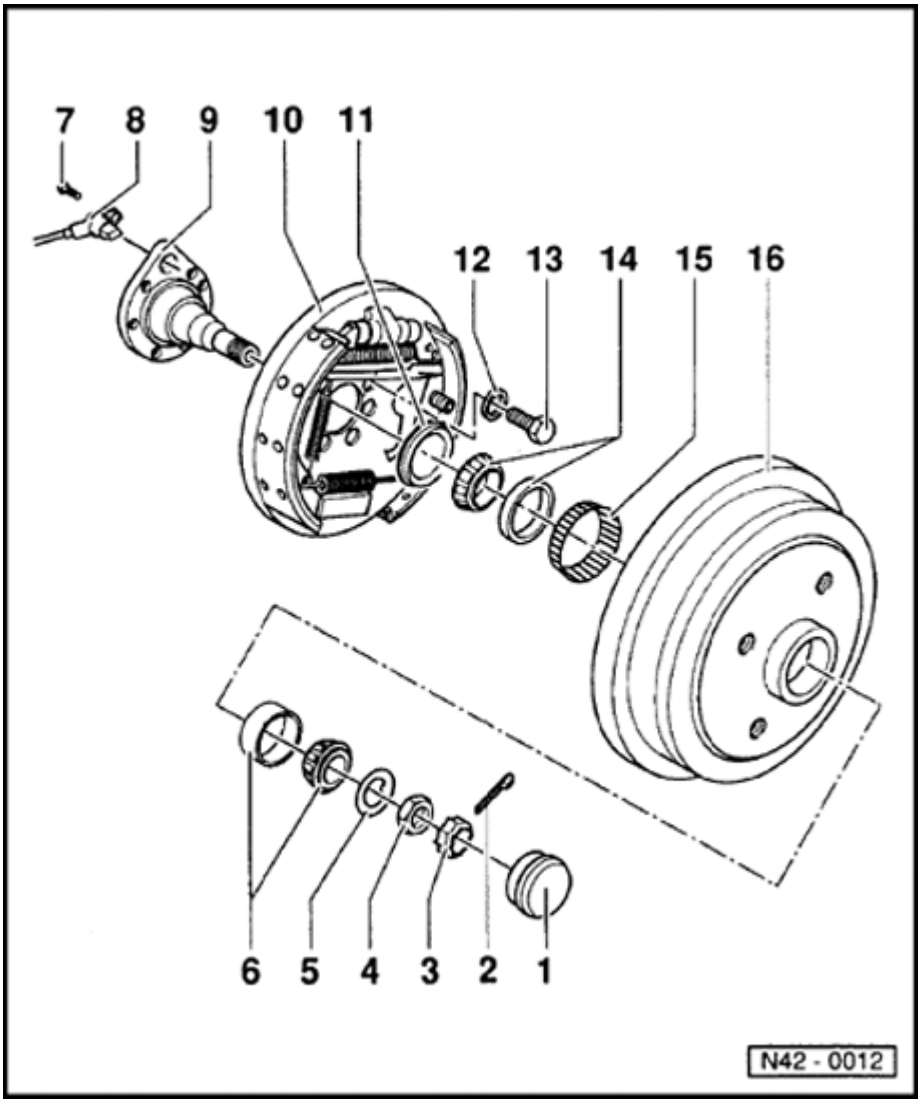

16 - Brake drum

- Before removing release brake shoe adjustment through wheel bolt hole ⇒ Fig. 5
- When removing the brake drum make sure that the outer wheel bearing does not fall out.
- Fill hub with multi-purpose grease before installing

42-19

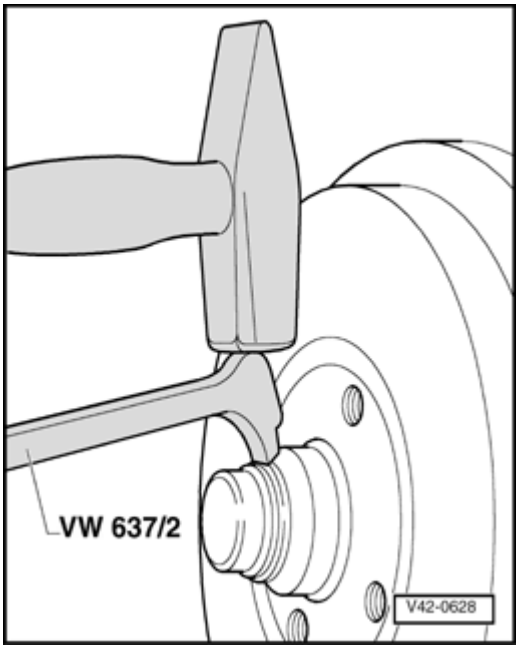

Fig. 1 Grease cap, pressing off

Loosen grease cap from seat by tapping lightly on the claw.

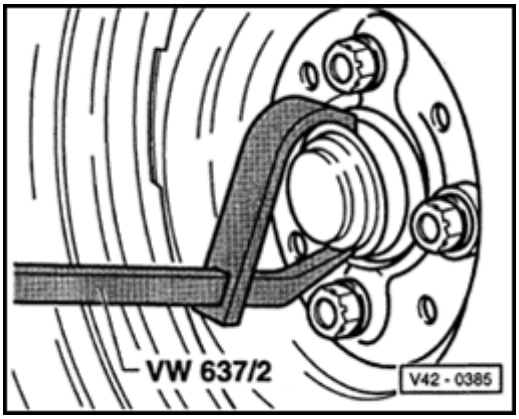

Fig. 2 Grease cap, pressing off

42-20

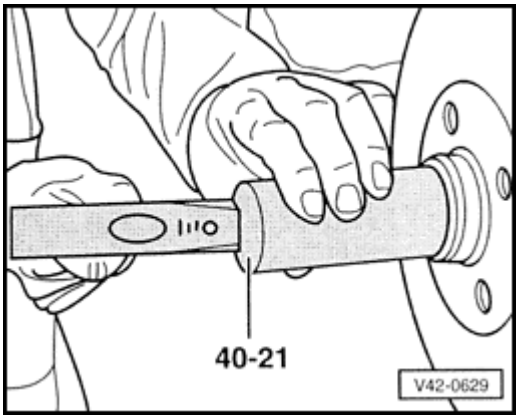

Fig. 3 Grease cap, driving on

Note:

- *Always replace damaged (dented) grease caps.*
- *Damaged (dented) grease caps allow ingress of moisture, therefore always use the illustrated tool.*

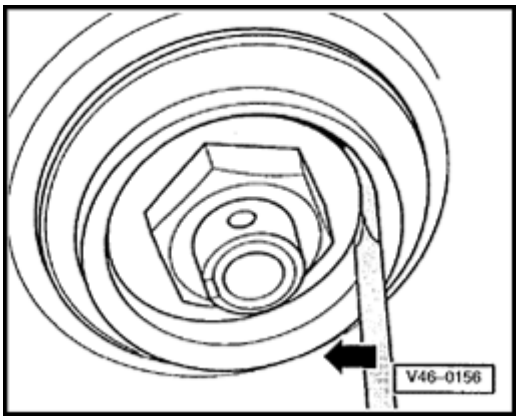

Fig. 4 Wheel bearing play, adjusting

Note:

Using a screwdriver it must be possible to move the thrust washer by finger pressure (without prying).

- Secure with locking ring and new cotter pin.

42-21

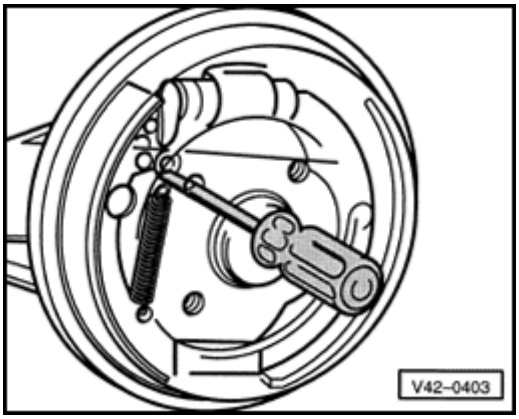

Fig. 5 Brake shoe adjustment, releasing

- Insert a screwdriver through a hole in the brake drum and push the wedge upward.

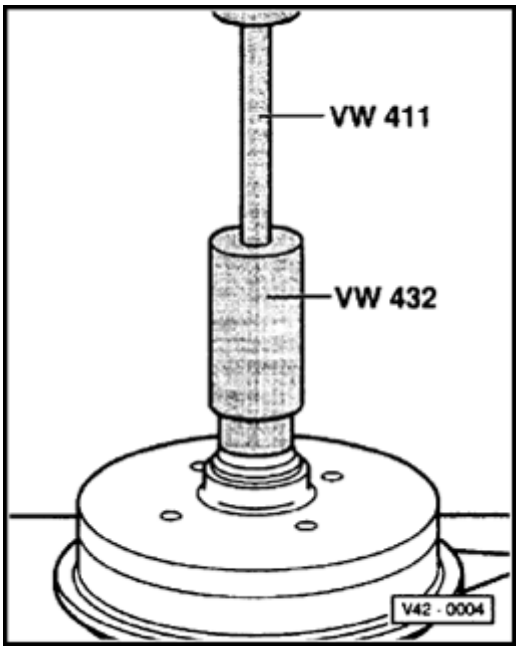

Fig. 6 Outer wheel bearing outer race, pressing in

42-22

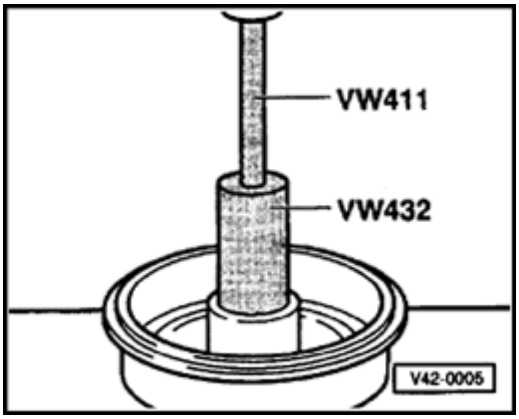

Fig. 7 Inner wheel bearing outer race, pressing in

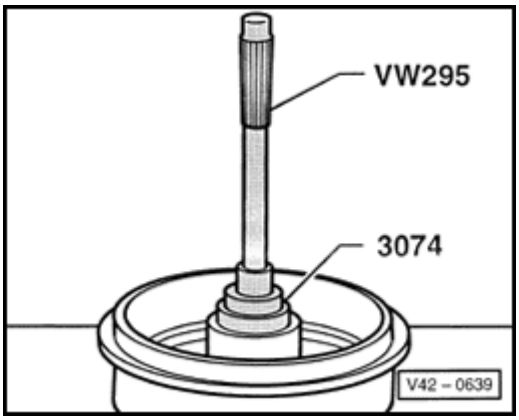

Fig. 8 Oil seal, driving in

42-23

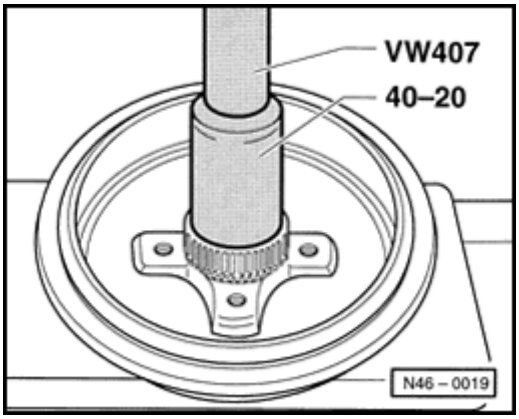

Fig. 9 Rotor, pressing in

42-24

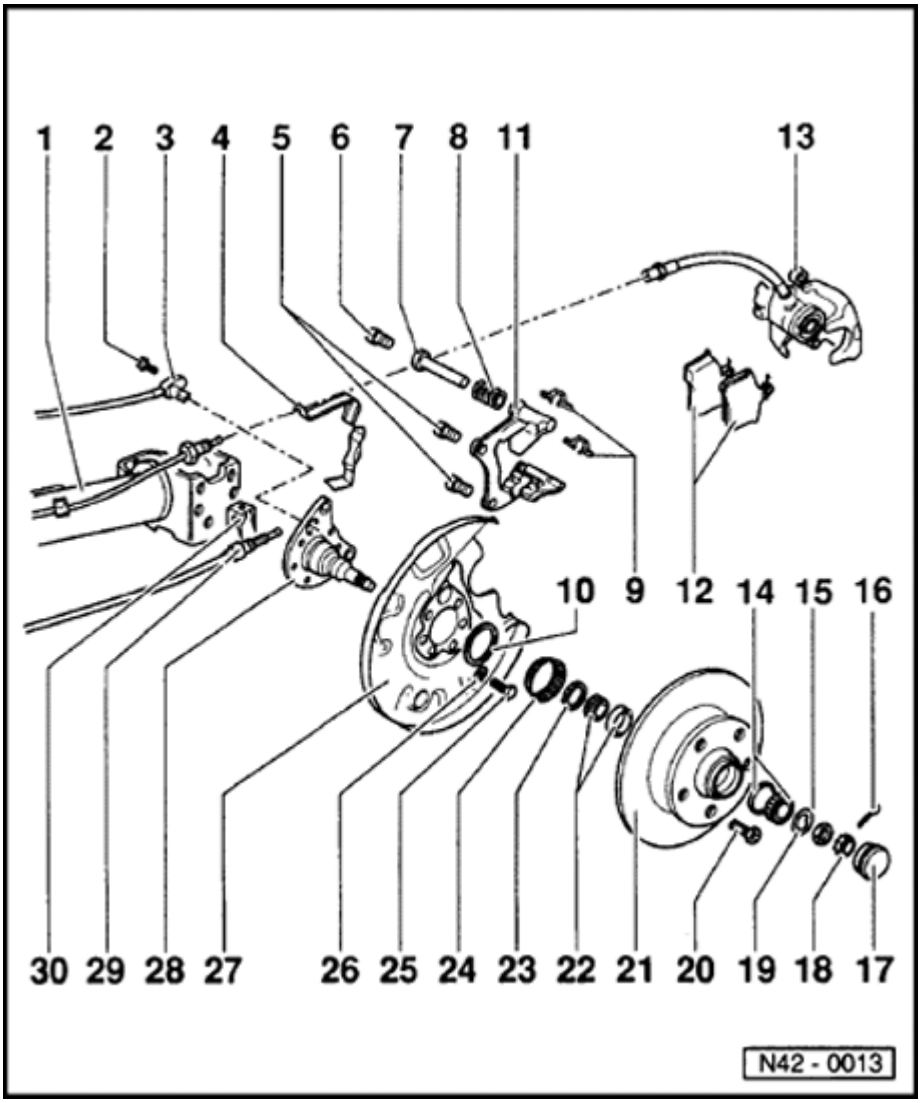

Wheel bearings, servicing - disc brakes (front wheel drive vehicles)

Note:

- *Careful sealing, absolute cleanliness and precise adjustment are requirements for long wheel bearing service life. Therefore note the following points:*
- *Install oil seal and grease cap as shown.*
- *Only reinstall clean bearings.*
- *Adjust wheel bearing play carefully.*

1 - Stub axle

2 - Hex socket head bolt, 10 Nm (7 ft lb)

42-25

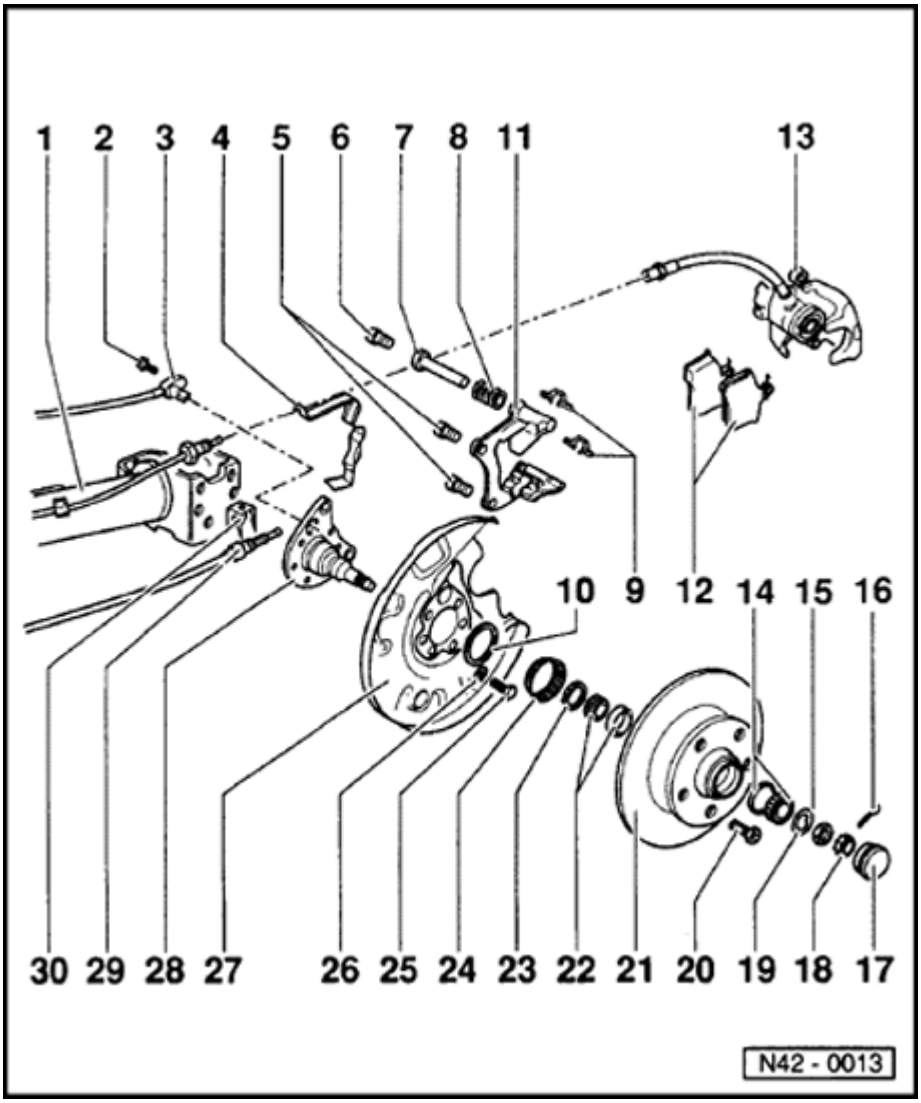

3 - Speed sensor

- Only on vehicles with ABS
- Before installing sensor, clean mounting hole inner surface and coat with lubricating paste G 000 650

4 - Brake hose bracket

5 - Hex socket head bolt, 65 Nm (48 ft lb)

6 - Self-locking hex bolt, 35 Nm (26 ft lb)

- Always replace

7 - Guide pins

8 - Protective cap

9 - Pad retaining spring

- Replace when changing pads

42-26

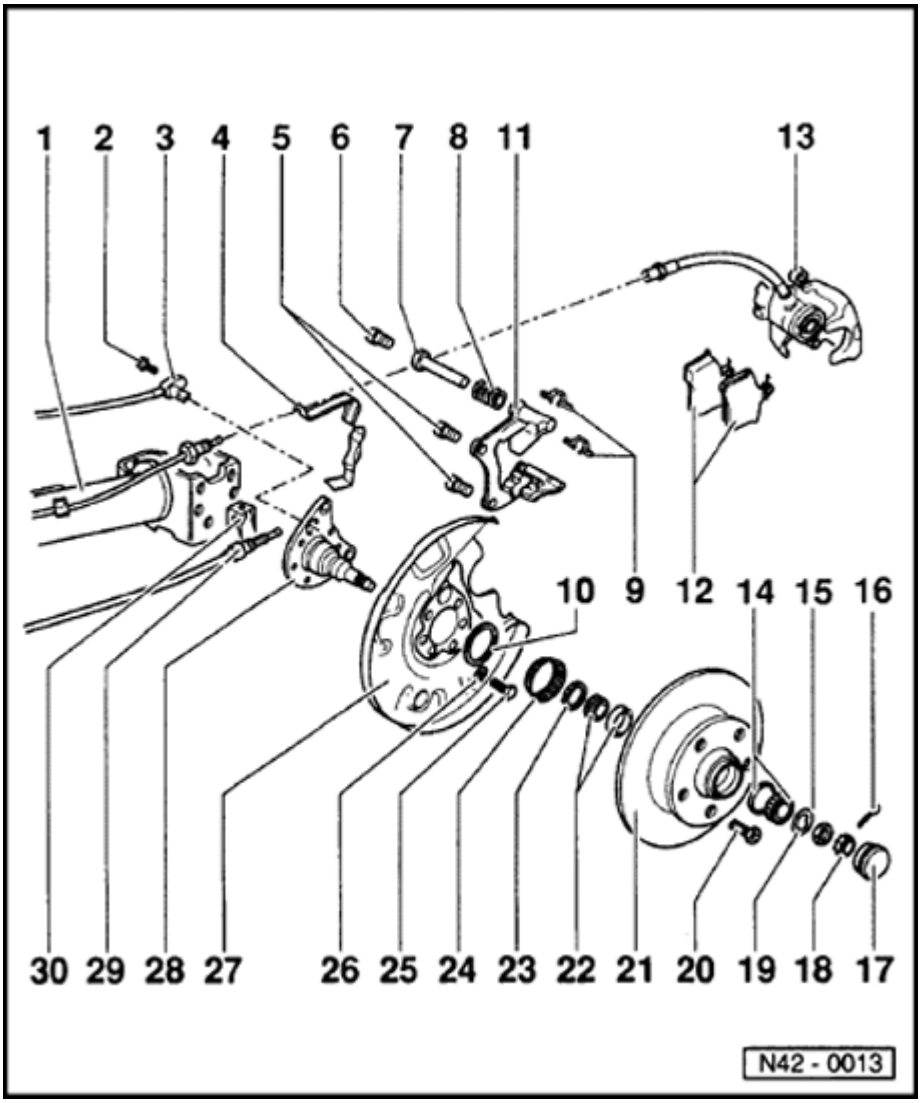

10 - Cover ring

- Always replace
- Installation position ⇒ Fig. 5
- Drive on with tube VW 519

11 - Pad carrier

12 - Brake pads

- Removing and installing ⇒ Page 46-33

13 - Brake caliper

- Servicing ⇒ Page 47-15

14 - Outer wheel bearing

- Drive out outer race with copper drift
- Pressing in ⇒ Fig. 6

15 - Hex nut

- Adjusting wheel bearing play ⇒ Fig. 4

16 - Cotter pin

- Always replace

42-27

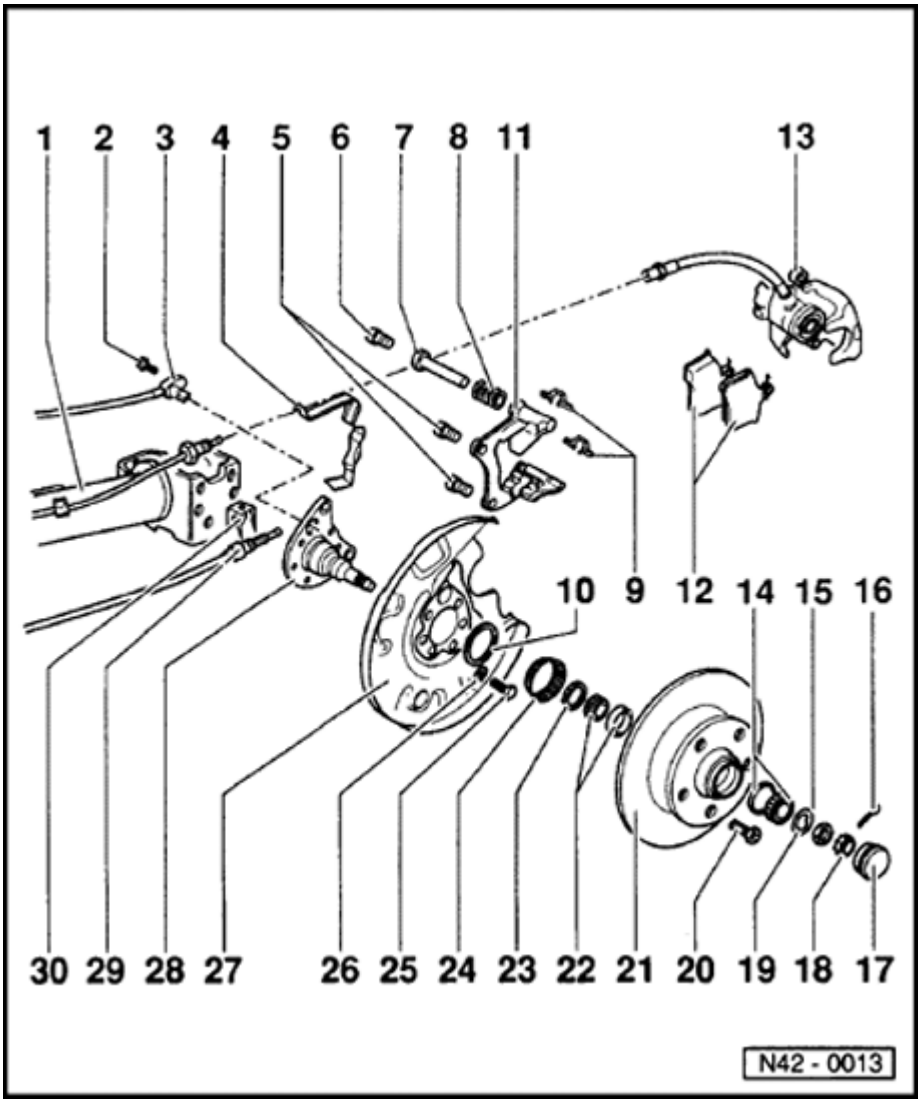

17 - Grease cap

- Pressing off ⇒ Fig. 1 and ⇒ Fig. 2
- Driving on ⇒ Fig. 3

18 - Locking ring

19 - Thrust washer

20 - Wheel bolt, 110 Nm (81 ft lb)

21 - Brake disc

- Before installing fill hub with multi-purpose grease

22 - Inner wheel bearing

- Drive out outer race with copper drift
- Pressing in ⇒ Fig. 7

23 - Oil seal

- Fill between sealing lips with multi-purpose grease
- Driving in ⇒ Fig. 8

24 - Speed sensor rotor

- Only on vehicles with ABS

25 - Hex bolt, 60 Nm (44 ft lb)

42-28

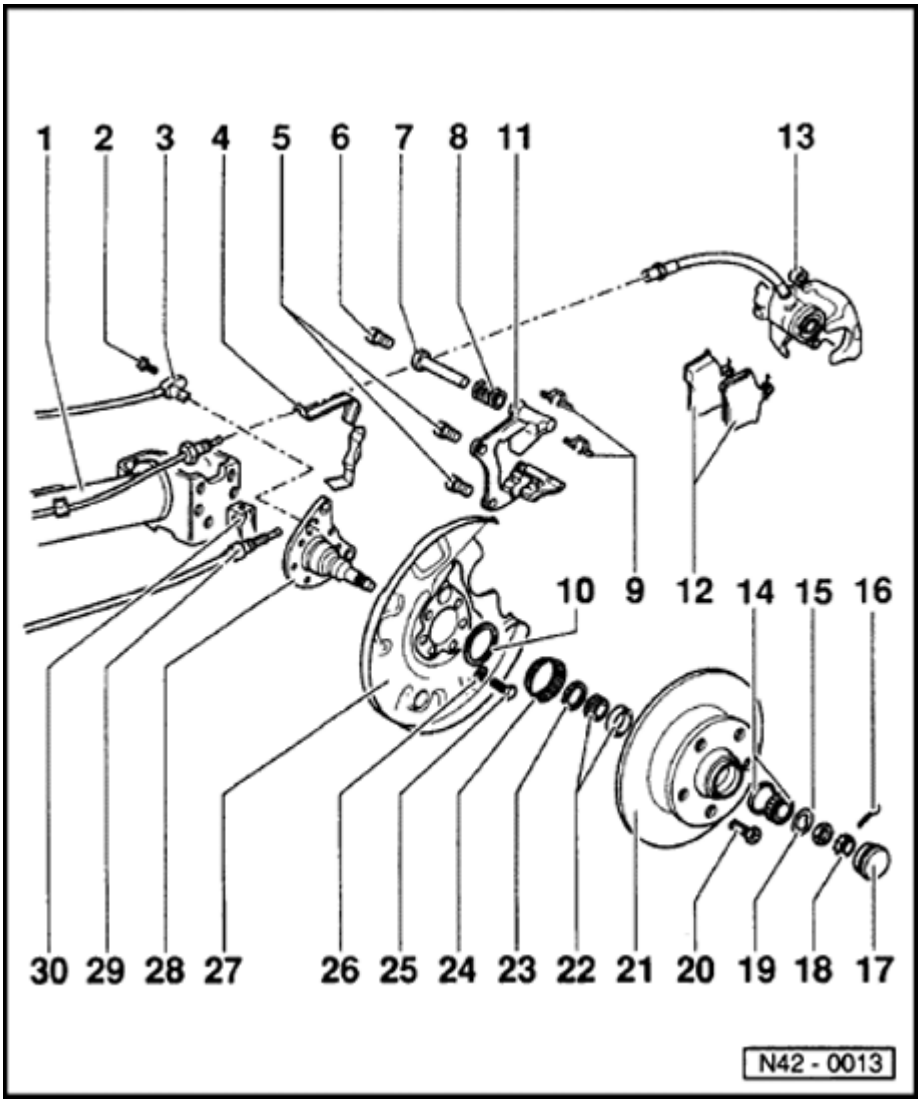

26 - Dished washer

- Large contact surface (concave side) to backing plate

27 - Backing plate

28 - Axle beam

- Straightening work is not permissible! Only use stub axles with 6 mounting holes.

29 - Parking brake cable

- Adjusting parking brake ⇒ Page 46-36

30 - Spring clip

42-29

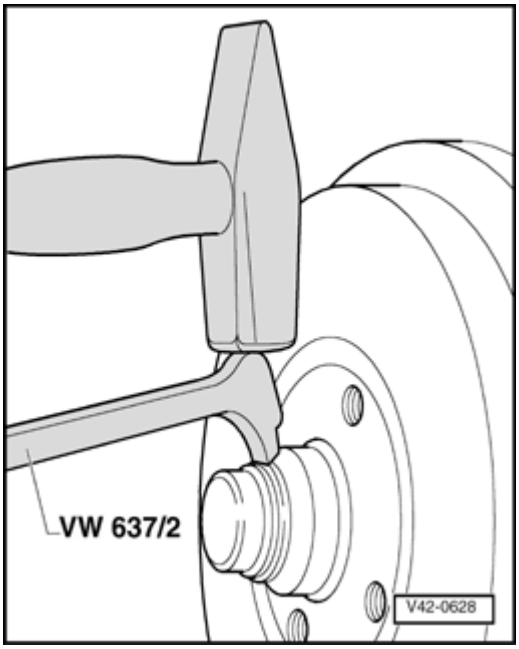

Fig. 1 Grease cap, pressing off

- Loosen grease cap by tapping lightly on the claw.

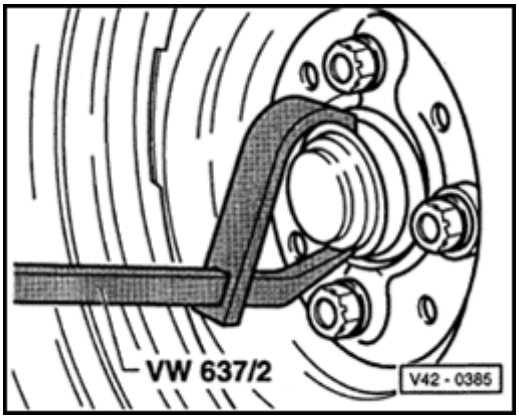

Fig. 2 Grease cap, pressing off

42-30

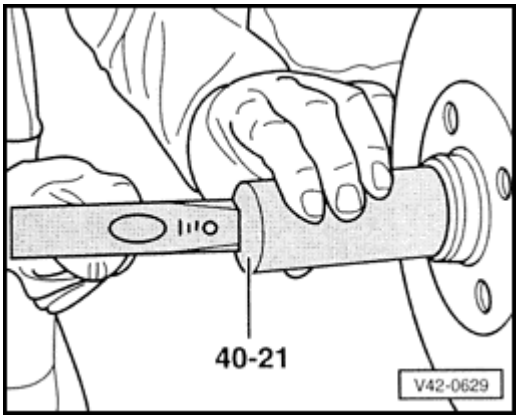

Fig. 3 Grease cap, driving on

Note:

- *Always replace damaged (dented) grease caps.*
- *Damaged (dented) grease caps allow ingress of moisture, therefore always use the illustrated tool.*

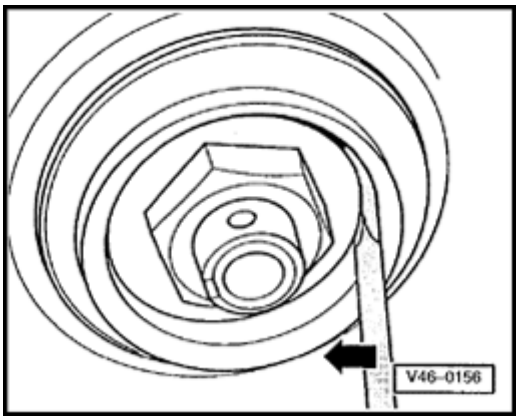

Fig. 4 Wheel bearing play, adjusting

Note:

Using a screwdriver it must be possible to move the thrust washer by finger pressure (without prying).

- Secure with locking ring and new cotter pin.

42-31

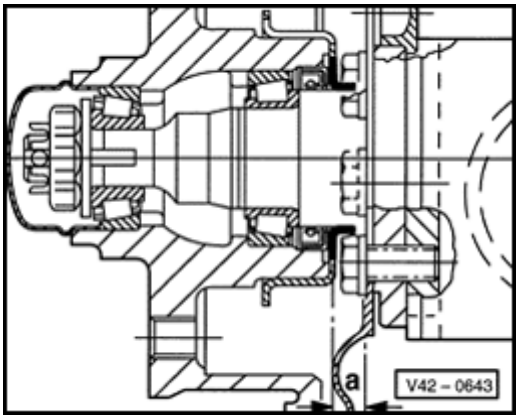

Fig. 5 Cover ring, installation position

Dimension "a" = 9.5 mm

- Drive on cover ring with tube VW 519

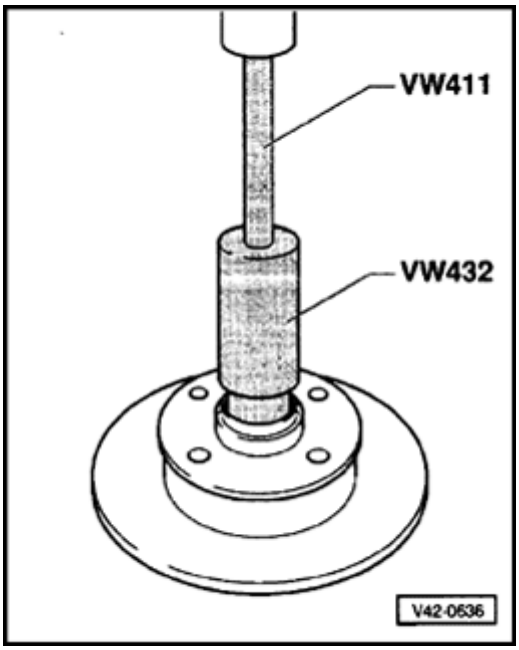

Fig. 6 Outer wheel bearing outer race, pressing in

42-32

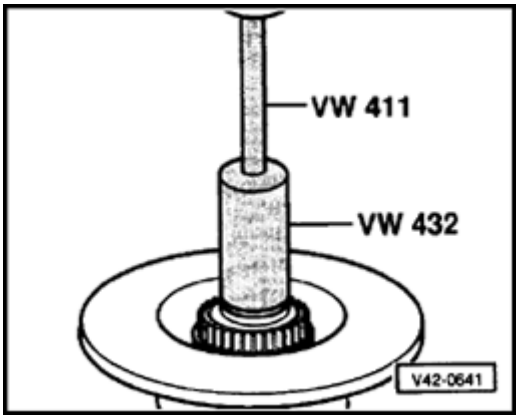

Fig. 7 Inner wheel bearing outer race, pressing in

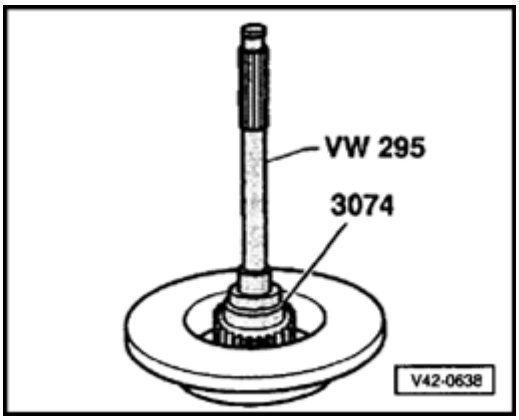

Fig. 8 Oil seal, driving in

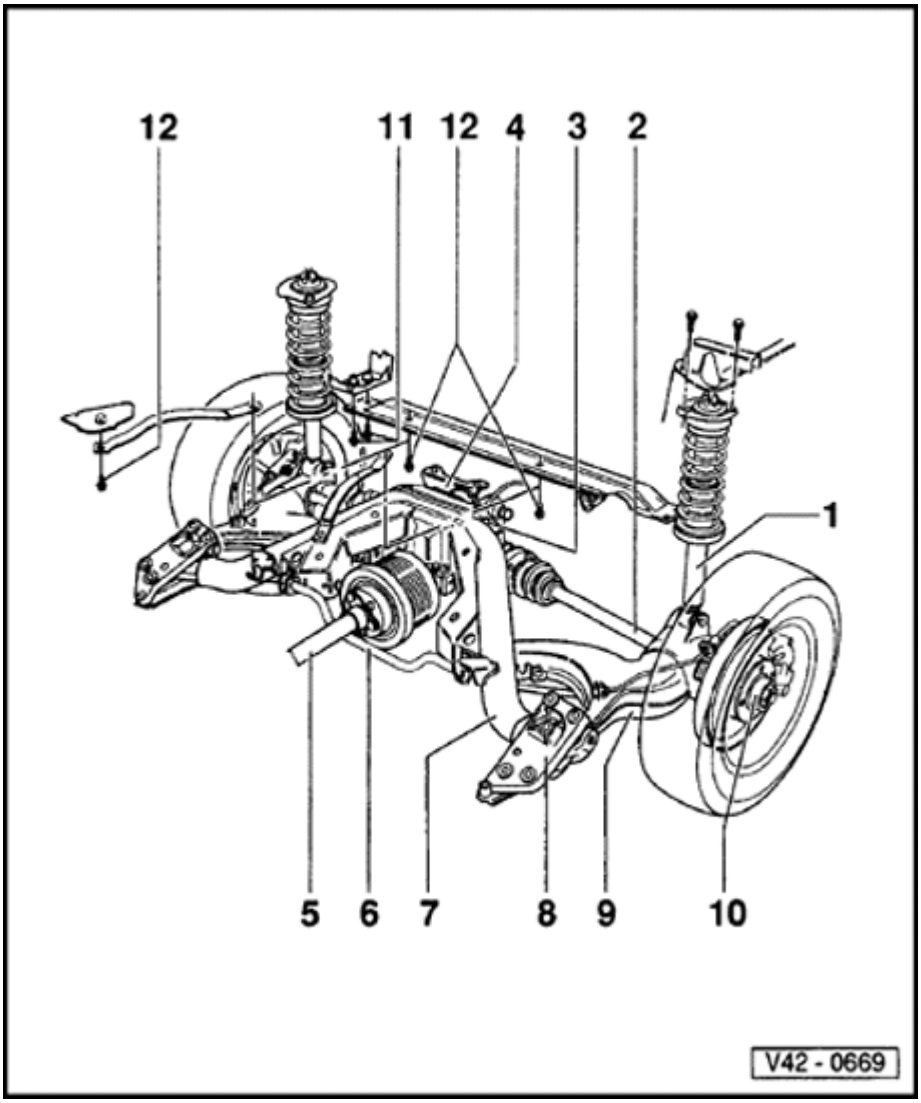

Rear axle, servicing (four wheel drive vehicles)

Note:

- *When removing and installing the rear axle, it is recommended to remove axle and differential together and to separate away from the vehicle. If only the axle beam is to be removed and installed, the wishbones can remain attached to the shock absorber. In both cases, disconnect vacuum lines and wiring before lowering the assembly.*
- *Always replace self-locking nuts and bolts.*
- *Always replace corroded nuts and bolts.*
- *The ABS speed sensor wiring connections are located under the rear seat.*

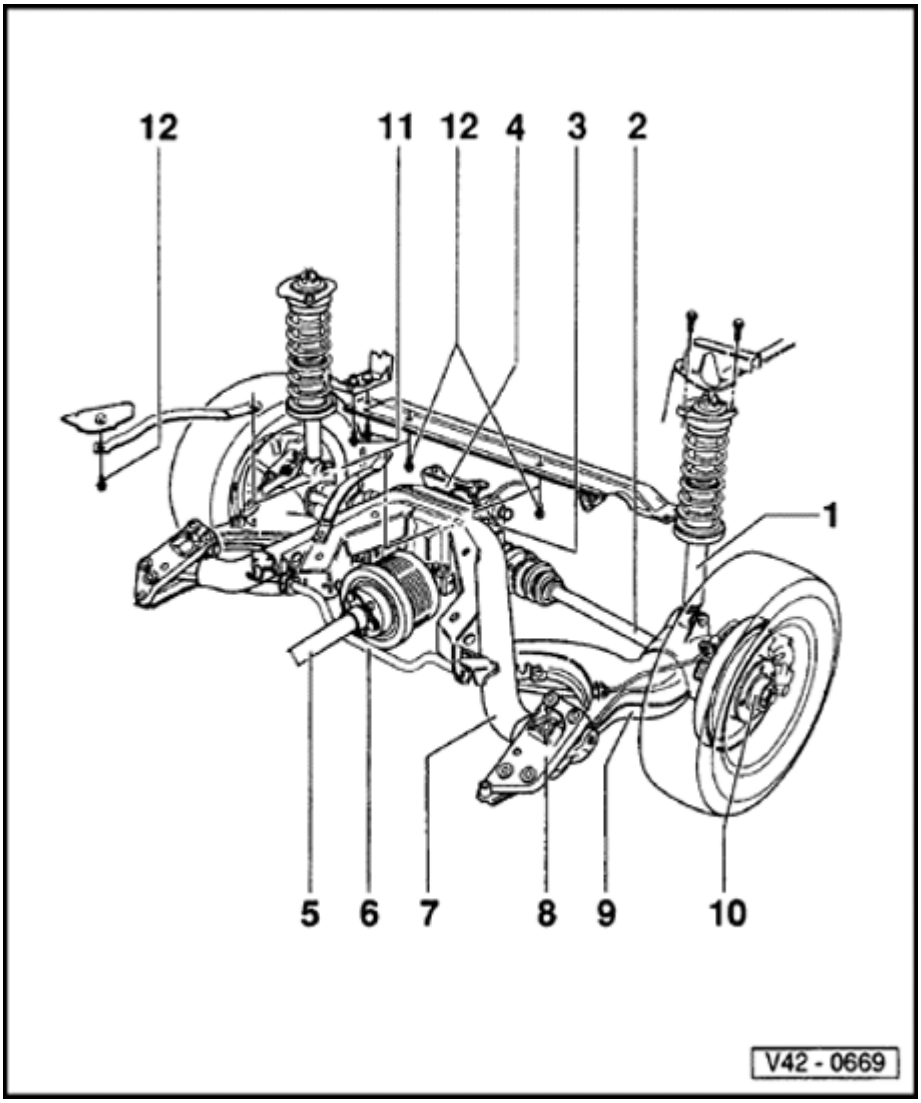

1 - Suspension strut

- Removing and installing ⇒ Page 42-4 , ⇒ Fig. 1 and ⇒ Page 42-37
- Disassembling and assembling ⇒ Page 42-53
- Application see Parts catalog

2 - Drive shaft

- Removing and installing ⇒ Fig. 2 and ⇒ Fig. 3
- Servicing ⇒ Page 42-46

3 - Final drive

- Removing and installing from axle beam ⇒ Fig. 9

4 - Final drive mounting bracket and carrier

- Removing and installing ⇒ Fig. 12
- Replacing rubber bonded mounting ⇒ Fig. 13

42-35

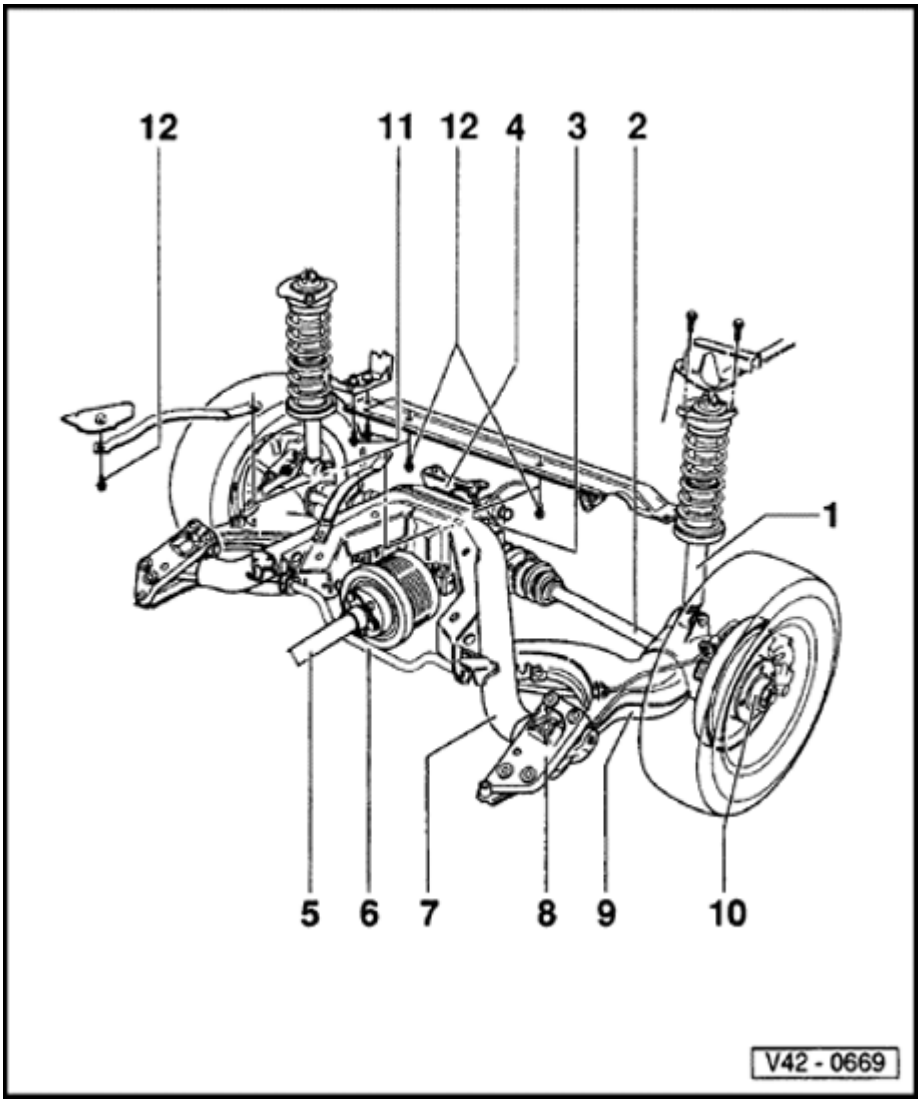

5 - Propshaft

- Removing and installing ⇒ Fig. 2
- Mark installation position before removing

6 - Anti-roll bar

- Removing and installing ⇒ Fig. 4

7 - Axle beam

- Replacing rubber bonded mounting ⇒ Fig. 10 and ⇒ Fig. 11

8 - Rear axle mounting bracket

- Removing and installing at body ⇒ Fig. 14

9 - Control arm

- Removing and installing ⇒ Fig. 5
- Replacing rubber bonded mounting ⇒ Fig. 6 and ⇒ Fig. 7
- Rubber bonded mounting with eccentric bushing ⇒ Fig. 8

42-36

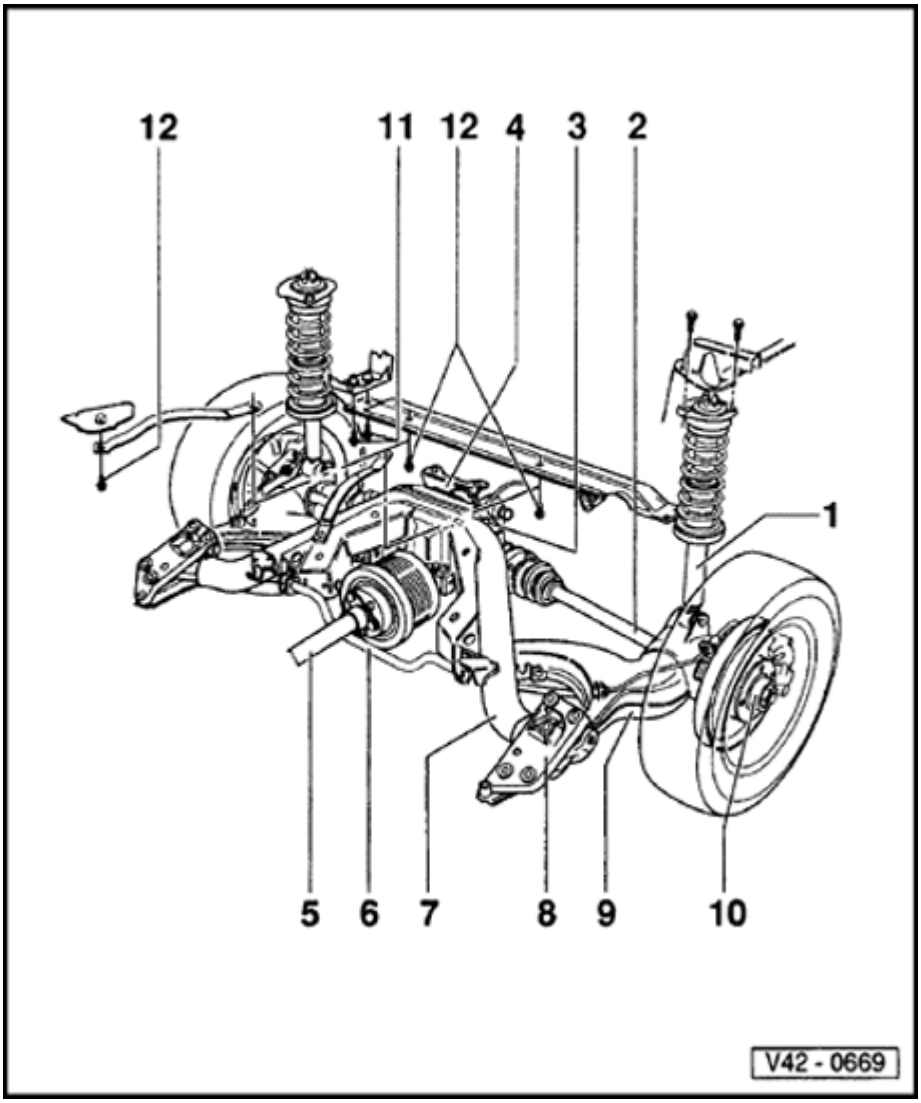

10 - Wheel bearing

- Servicing ⇒ Page 42-59
- Servicing brakes

⇒ *Repair Manual, Suspension, Wheels,Brakes, Steering, Repair Group 46 and47*

11 - Hex bolt, 85 Nm (63 ft lb)

12 - Hex bolt for seat belt strut, 25 Nm (18 ft lb)

42-37

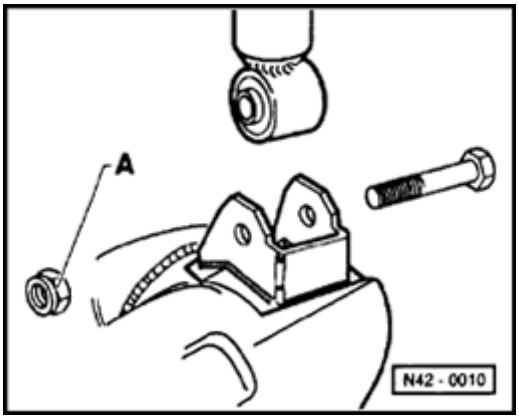

Fig. 1 Suspension strut from control arm, removing and installing

Before installing, bring control arm into horizontal position (unladen state). Removing and installing suspension strut at body ⇒ Page 42-4 .

Tightening torque -A-: 65 Nm (48 ft lb)

Note:

Support control arm otherwise damage may occur to constant velocity joint as a result of over-stressing.

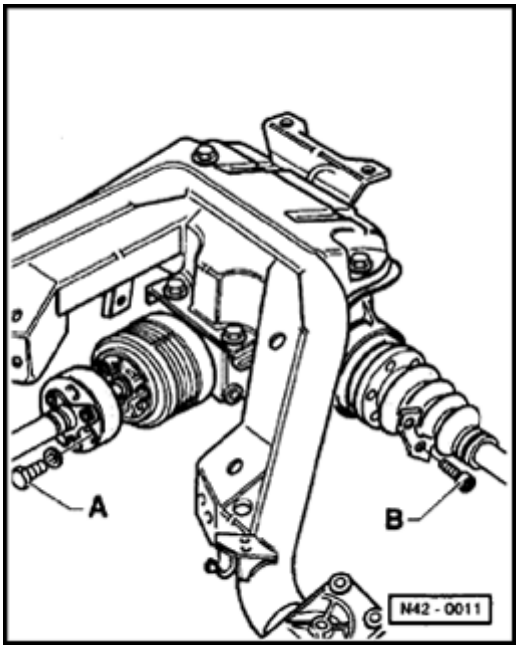

Fig. 2 Driveshaft and drive axle, removing and installing at differential

Before removing propshaft, mark installation position. If installed offset, imbalance will be excessive.

Tightening torque -A- and -B-: 45 Nm (33 ft lb)

Note:

Always support propshaft with wire otherwise constant universal joint will be damaged.

42-38

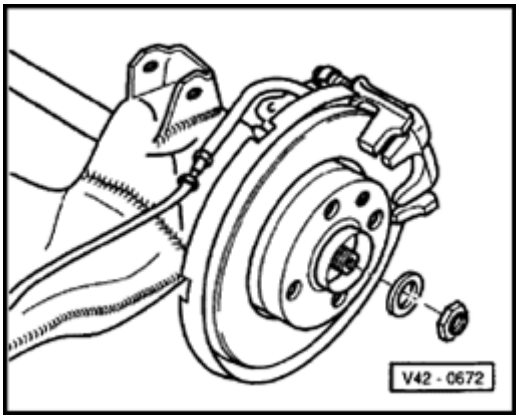

Fig. 3 Drive shaft, removing and installing

Loosen and tighten only when vehicle is standing on its wheels (danger of accident).

Tightening torque: 90 Nm (66 ft lb) and turn 45° further ($^1/_8$ turn)

Note:

Any paint residue and/or corrosion on the thread of the outer joint must be removed before the nut is installed.

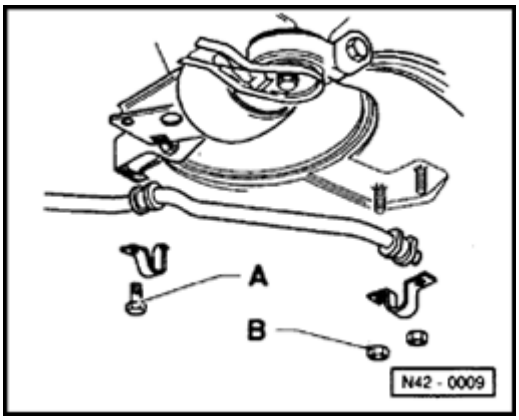

Fig. 4 Stabilizer bar, removing and installing

Tightening torque -A- and -B-: 25 Nm (18 ft lb)

42-39

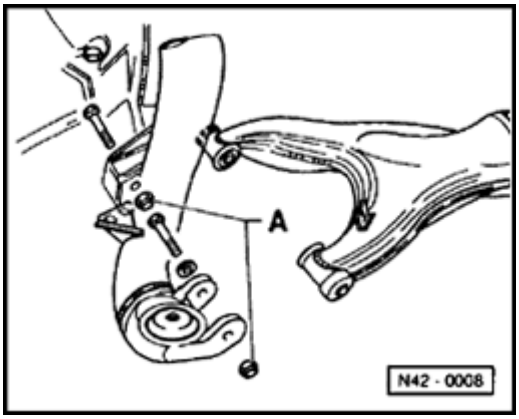

Fig. 5 Control arm, removing and installing

Before tightening bring control arm into horizontal position (unladen state).

To remove the right-hand control arm inner bolt, remove brake pressure regulator from axle beam.

Tightening torque -A-: 120 Nm (89 ft lb)

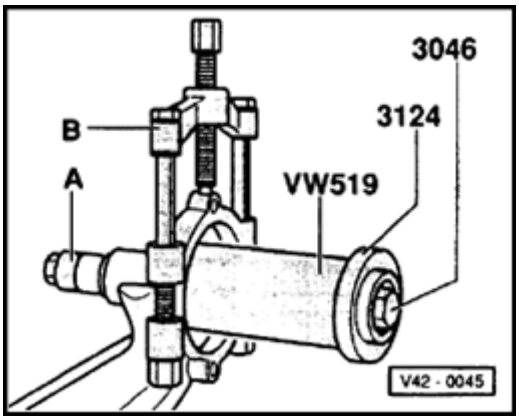

Fig. 6 Rubber bonded mounting, removing

A - 17 mm socket

B - Separating device 12 - 75 mm, e.g. Kukko 17/1

42-40

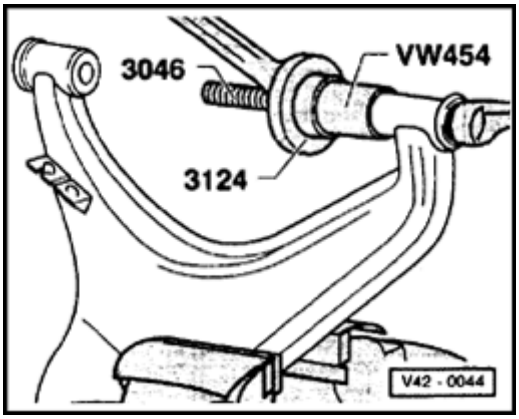

Fig. 7 Bonded rubber mounting, installing

Before installing coat with acid free lubricant, e.g. soft soap.

Installation position: Shoulder on outer mounting to outside, to inside on inner mounting (to center of vehicle).

Note:

Deviations from the rear axle toe and camber specifications can be corrected by using a bonded rubber mounting with eccentric bushing ⇒ Fig. 8

42-41

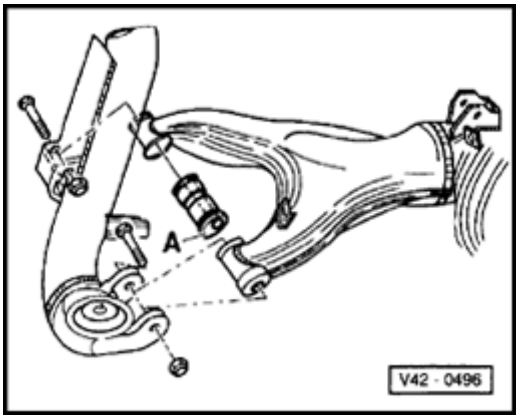

Fig. 8 Rubber mounting to correct camber/toe

The rubber mounting -A- is equipped with an eccentric bushing which can change the position of the control arm.

This rubber mounting may only be installed in the control arm inner mounting. The camber and/or toe can be changed according to installation position.

Installation position	Alteration
Eccentric upward	Camber alteration negative
Eccentric downward	Camber alteration pos.
Eccentric forward	Toe alteration positive
Eccentric rearward	Toe alteration negative

Note:

With this mounting the camber or toe can be altered up to 18 .

42-42

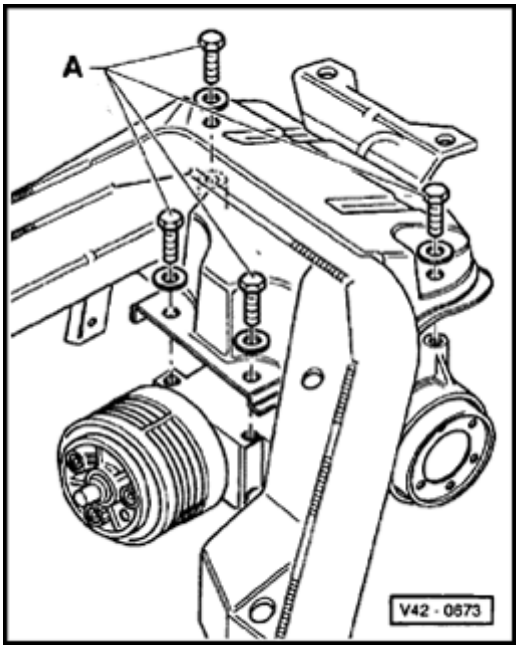

Fig. 9 Final drive, removing and installing from axle beam

Removing and installing viscous coupling

⇒ *Repair Manual, 5 Spd. Manual Transmission 02A Repair Group 39*

Tightening torque -A-: 45 Nm (33 ft lb)

42-43

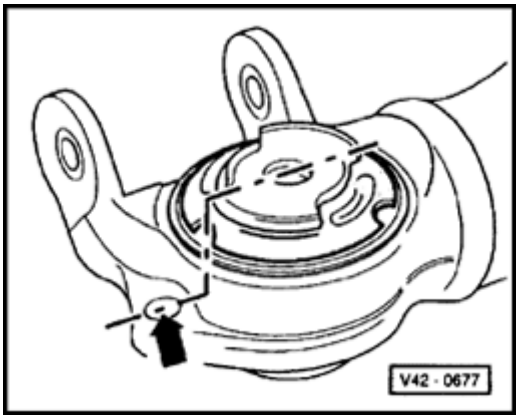

Fig. 10 Installation position, determining

Connect segment corners of bonded rubber mounting metal core with a line.

The continued line must pass through the center of hole (arrow).

Note:

The kidney-shaped recess must be pointing in direction of travel when viewed from the center of vehicle.

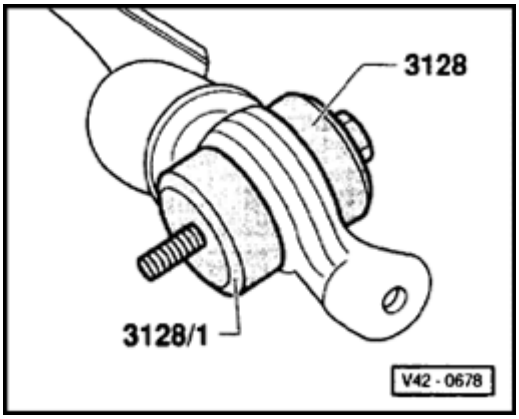

Fig. 11 Rubber bonded mounting, installing

Place one half of the rubber bonded mounting in correct position and pull in with tool 3128 and 3128/1. Then place 2nd half in position and pull in.

42-44

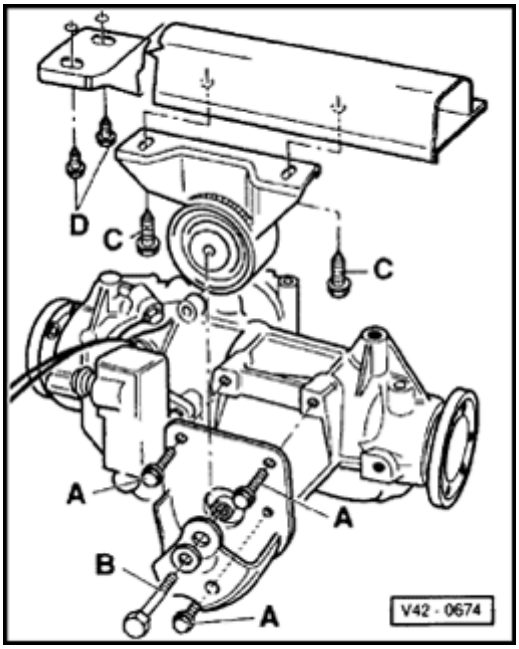

Fig. 12 Mounting bracket and final drive carrier, removing and installing

Remove and install complete

When assembling mounting bracket and final drive carrier away from the vehicle, make sure parts are correctly located relative to each other.

It is essential that the bonded rubber mounting is installed stress free in the vehicle.

Tightening torque	-A- 45 Nm (33 ft lb)
	-B- 65 Nm (48 ft lb)
	-C- 85 Nm (63 ft lb)
	-D- 85 Nm (63 ft lb)

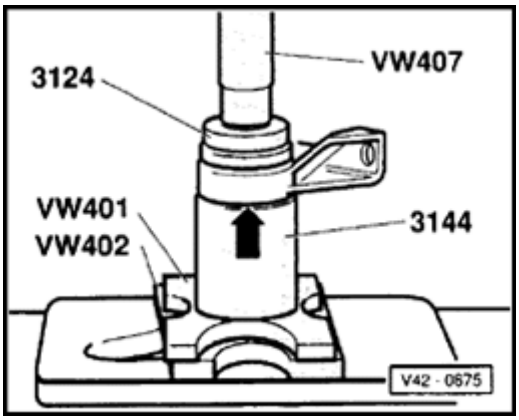

Fig. 13 Final drive bonded rubber bushing, pressing in and out

No specific installation position

Insertion depth: flush with lower edge (arrow)

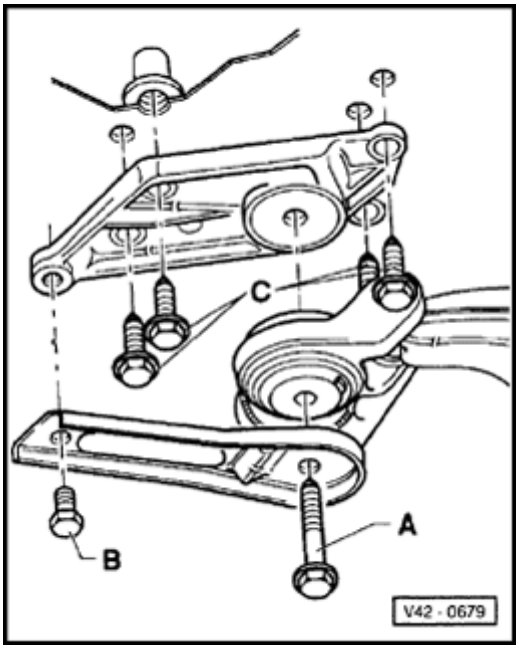

Fig. 14 Mounting bracket on body, removing and installing

Mark mounting bracket installation position relative to body longitudinal member, otherwise the rear axle must be realigned on an axle alignment stand after reinstalling.

Tightening torque	-A- 130 Nm (96 ft lb)
	-B- 60 Nm (44 ft lb)
	-C- 85 Nm (63 ft lb)

Rear drive shafts, servicing

Removing and installing drive shafts ⇒ Page 42-37

Note:

- *Grease quantity:*

  - - outer constant velocity joint 80 g G-6.3

  - - inner constant velocity joint 80 9 G-6.3

- *Greasing outer joint: press half of the grease into the joint, and the other half evenly into the boot.*

- *Greasing inner joint: press half of the grease into the inner joint from both sides, the other half evenly into the boot.*

- *When replacing the boot, regrease joint if required.*

42-47

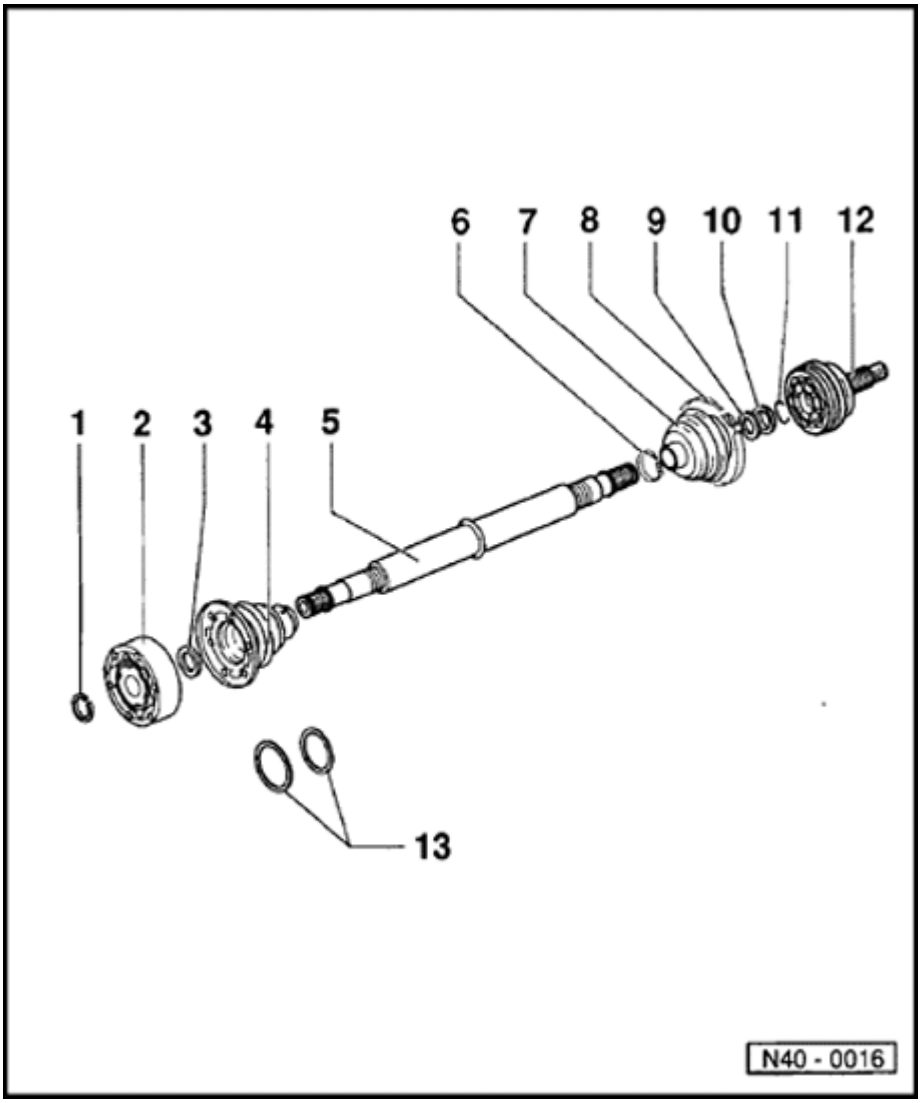

1 - Circlip

- Always replace
- Remove and install with VW161 a

2 - Inner constant velocity joint, 81 mm diameter

- Only replace complete
- Pressing off ⇒ Page 40-54
- Pressing on ⇒ Page 40-55
- Greasing ⇒ Notes ⇒ Page 42-46
- Checking ⇒ Page 40-62

3 - Dished washer

- Inner diameter splined
- Installation position: outer diameter (concave side) contacts constant velocity joint

42-48

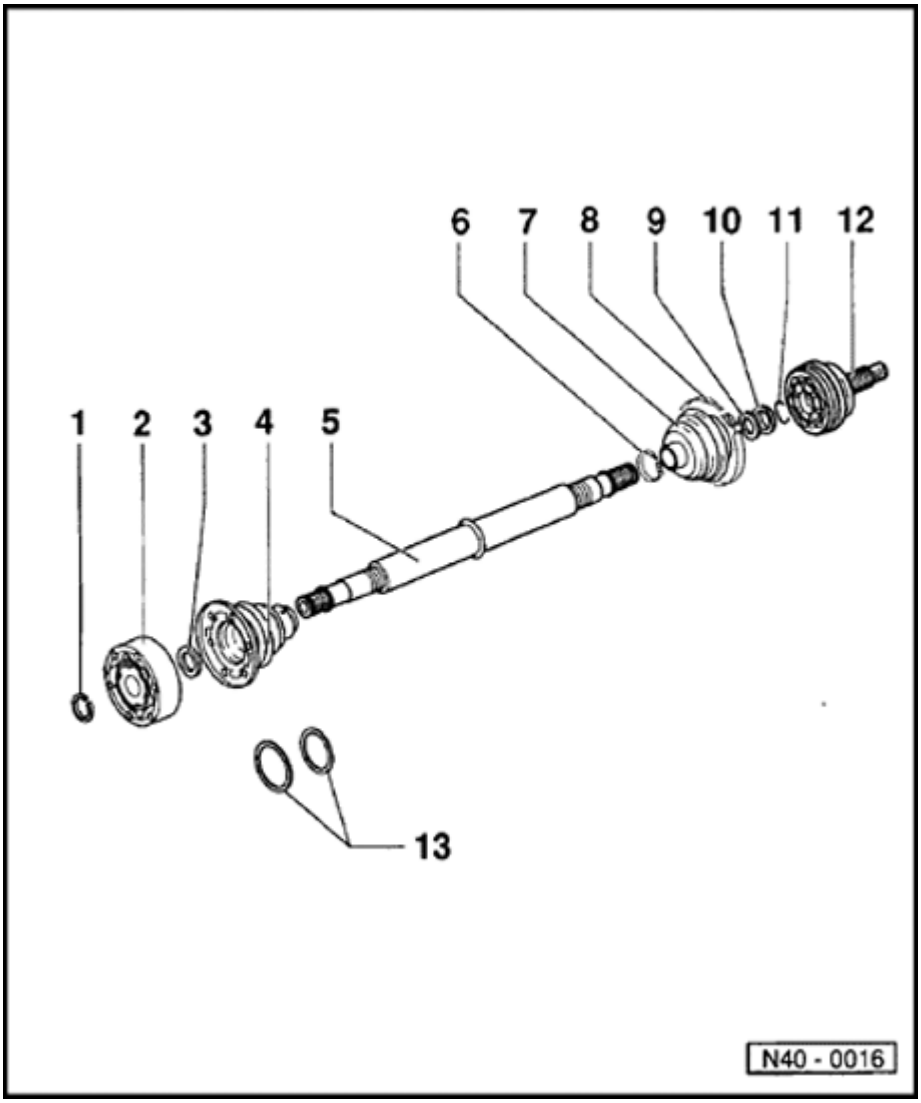

4 - Boot for 94 mm diameter constant velocity joint

- Rubber version
- Check for tears and chafing
- Installation position: At cuff 1 to 1-1/2 grooves visible
- Coat inside of cap with D3
- Drive off with drift

5 - Drive axle

- Different drive axle lengths - short shaft right

6 - Hose clamp

- Always replace
- Tensioning ⇒ Page 40-57

42-49

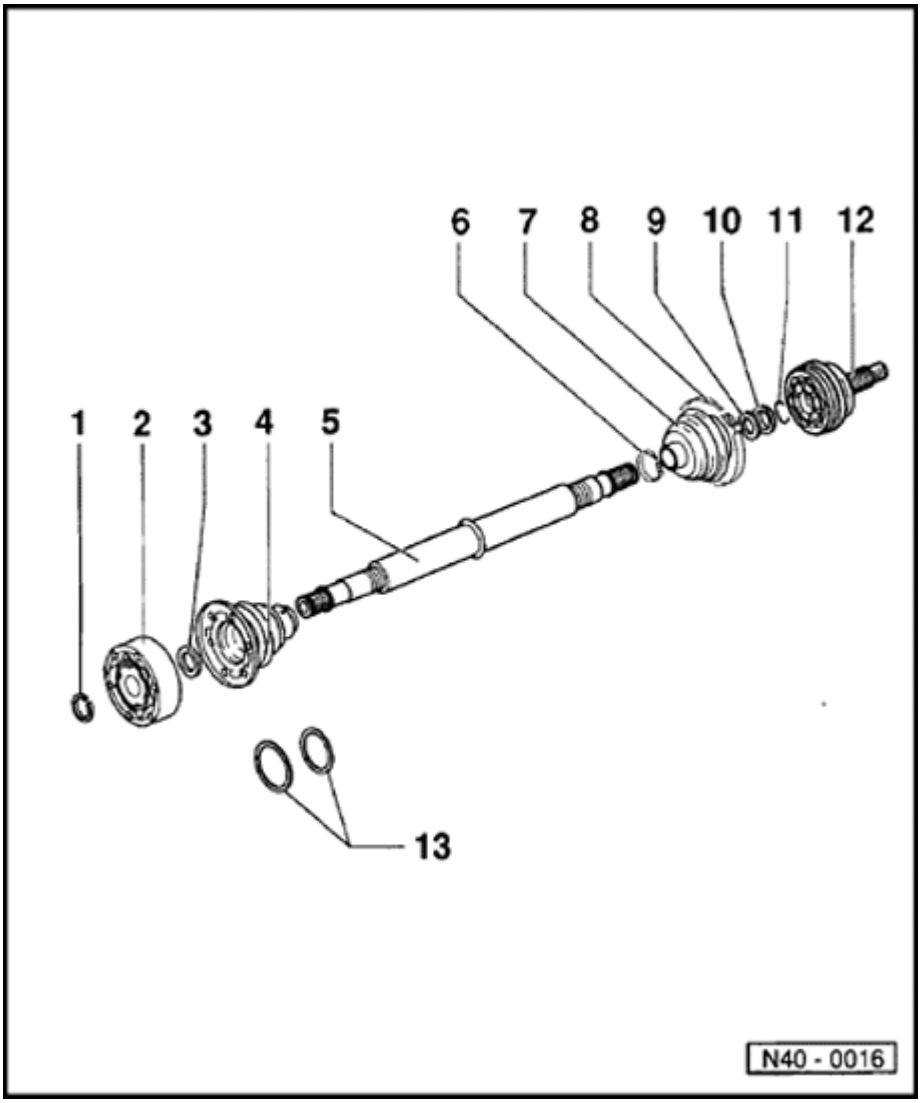

7 - Boot for 81 mm diameter constant velocity joint

- Polyester elastomer version
- Check for tears and chafing
- Installation position: At cuff 1 to 1-1/2 grooves visible
- To balance pressure briefly ventilate boot before tensioning the small clamp

8 - Hose clamp

- Always replace
- Tensioning ⇒ Page 40-57

9 - Dished washer

- Outer diameter (concave side) contacts thrust washer

10 - Thrust washer

42-50

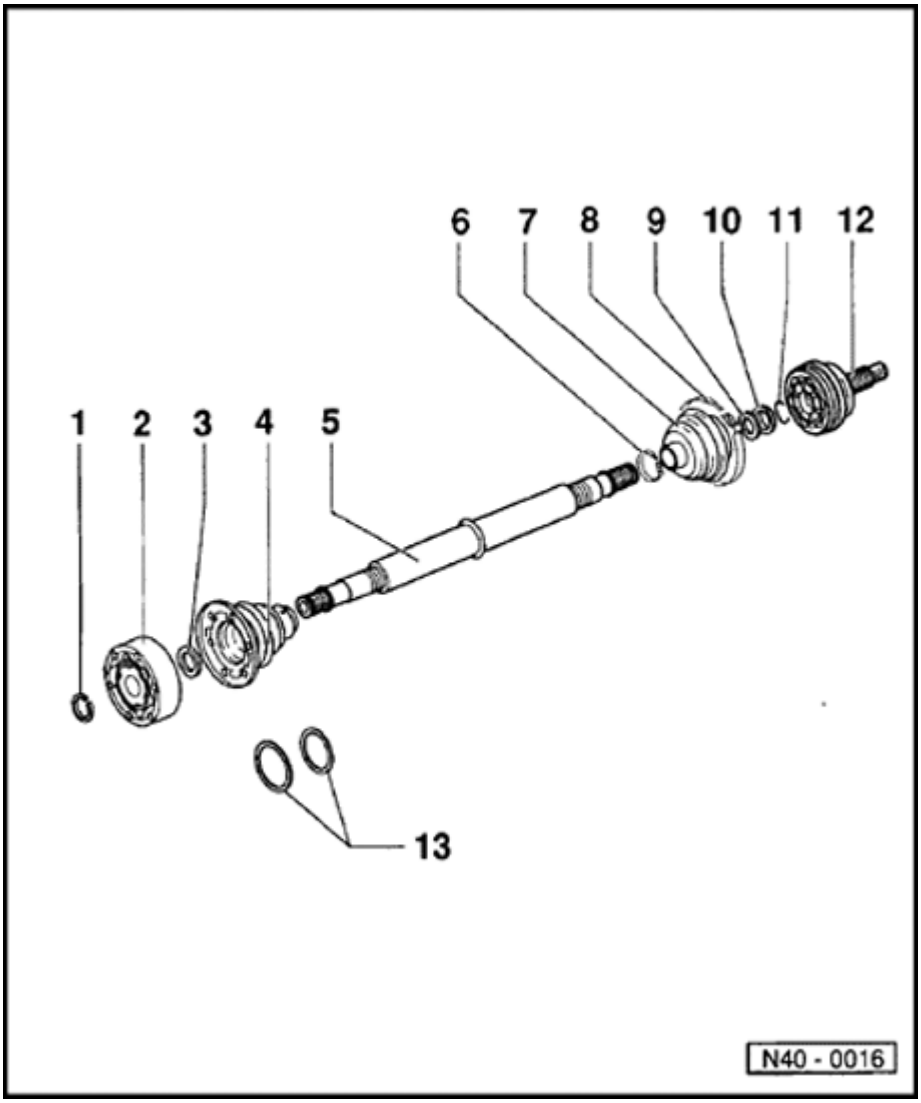

11 - Circlip

- Always replace
- Insert in shaft groove

12 - Outer constant velocity joint: 81 mm diameter

- Only replace complete
- Removing ⇒ Page 40-54
- Installing: drive onto shaft with plastic hammer until compressed circlip seats
- Greasing ⇒ Notes ⇒ Page 42-46
- Checking ⇒ Page 40-60

13 - Inner support rings

- Prevents boot inflating
- Only installed on left drive shaft transmission end

42-51

Reworking cap nut in side member (four wheel drive vehicles)

If the threads of the cap nut in the side member are damaged, it must either be retapped or the cap nut must be drilled out.

- Remove control arm if necessary.

- Drill through damaged cap nut in the side member using a 10.2 mm diameter drill from underneath.

Note:

Do not tilt the drill when drilling.

WARNING!

Wear protective goggles.

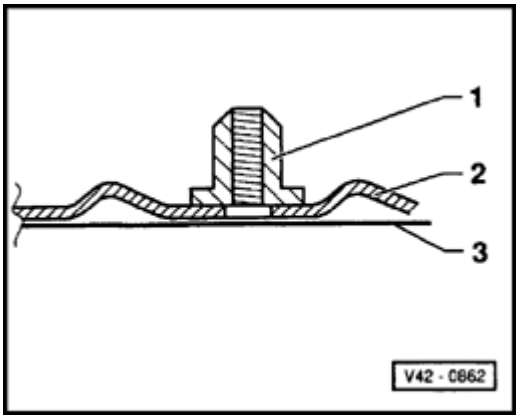

1 - Cap nut

2 - Reinforcing plate

3 - Side member

42-52

- Cut new thread in the cap nut, M 12 x 1.5.

- Use new bolts, Part No. N 010 137.1 and washer, Part No. N 011 531.7 to secure the rear axle.

Tightening torque: 65 Nm (48 ft lb)

Note:

The procedure described here must only be performed on one cap nut on each side of the vehicle.

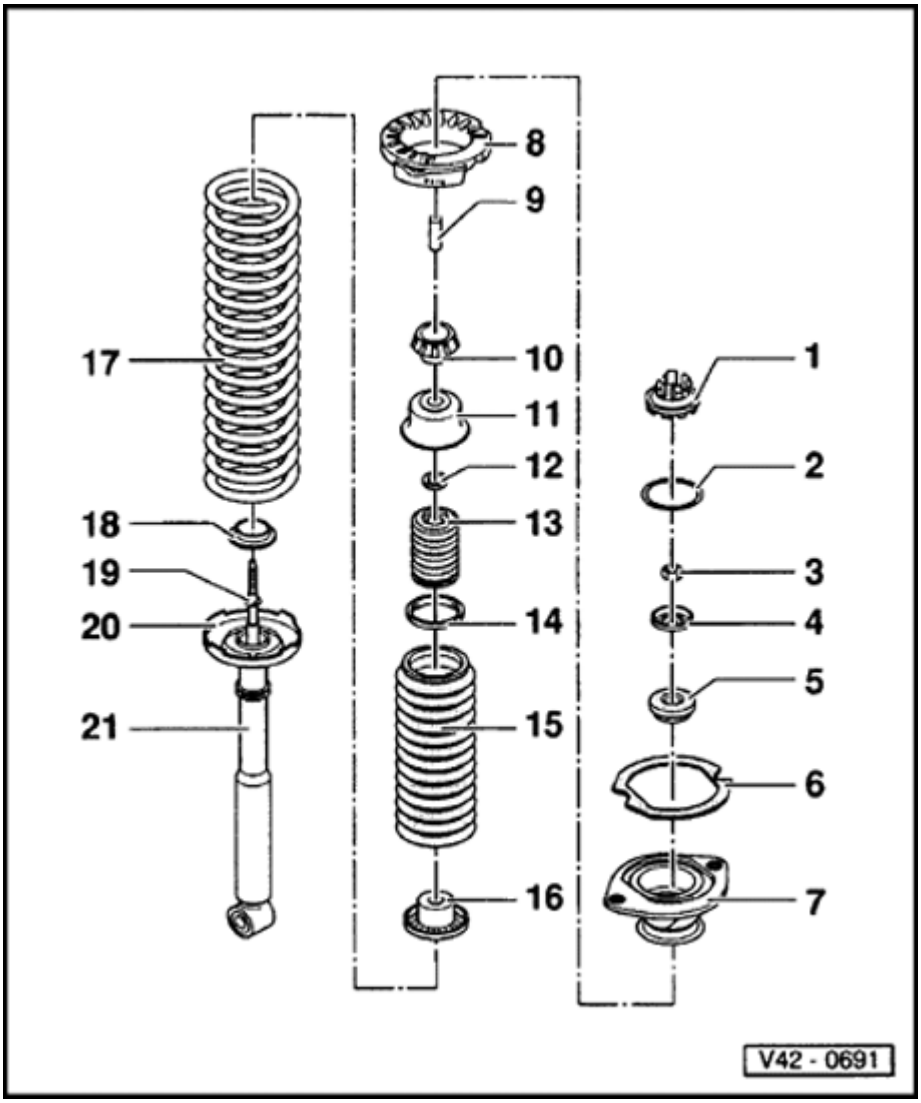

Suspension strut, disassembling and assembling (four wheel drive vehicles)

1 - Cap

- Pry out with screwdriver
- Pressing on ⇒ Fig. 5
- Installation position ⇒ Fig. 5

2 - Seal

3 - Self locking hex nut, 30 Nm (22 ft lb)

- Always replace

4 - Dished washer

5 - Upper rubber mounting

6 - Gasket (foam)

- Always replace

42-54

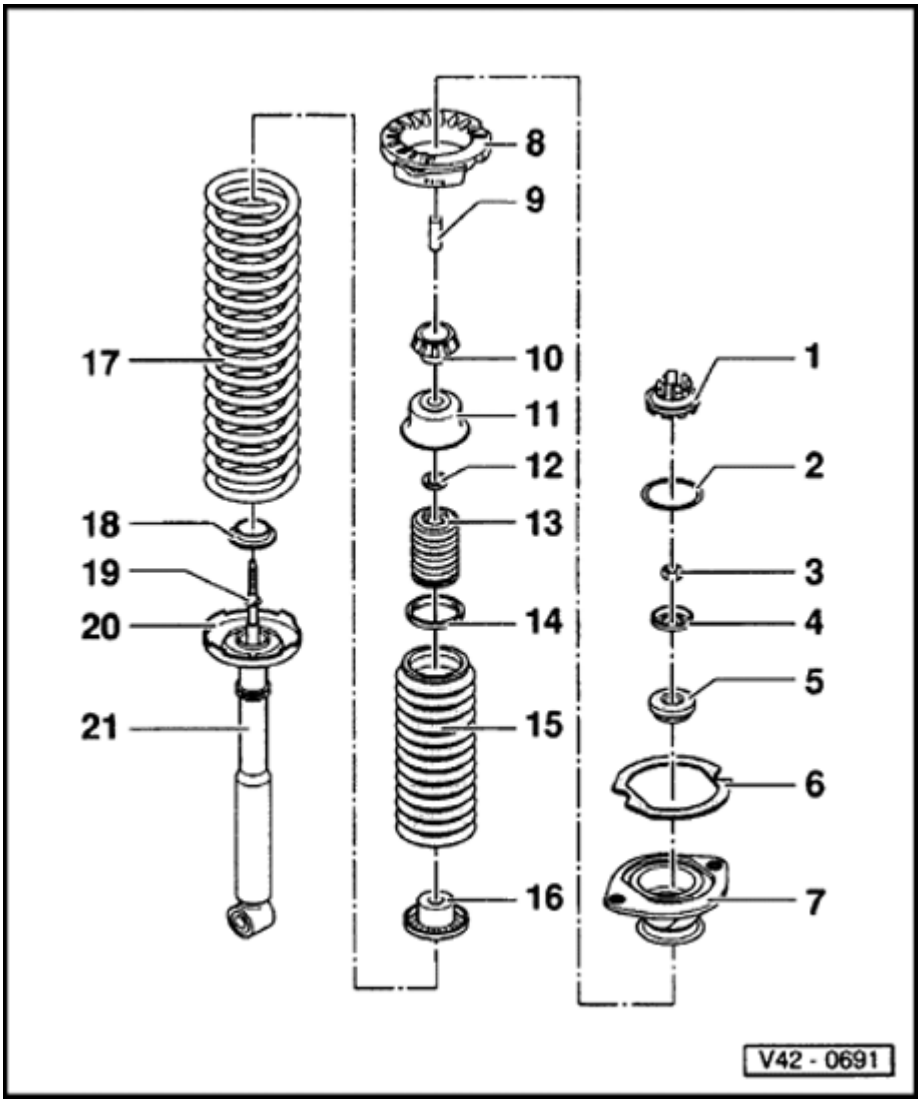

7 - Suspension strut mounting

- Welded nuts must be located in the spring seat recesses
- Installation position to spring seat ⇒ Fig. 3

8 - Spring seat

9 - Spacer tube

10 - Lower rubber mounting

11 - Stop buffer mounting

12 - Washer

13 - Stop buffer

14 - Ring (Aluminium)

15 - Boot

16 - Protective cap

42-55

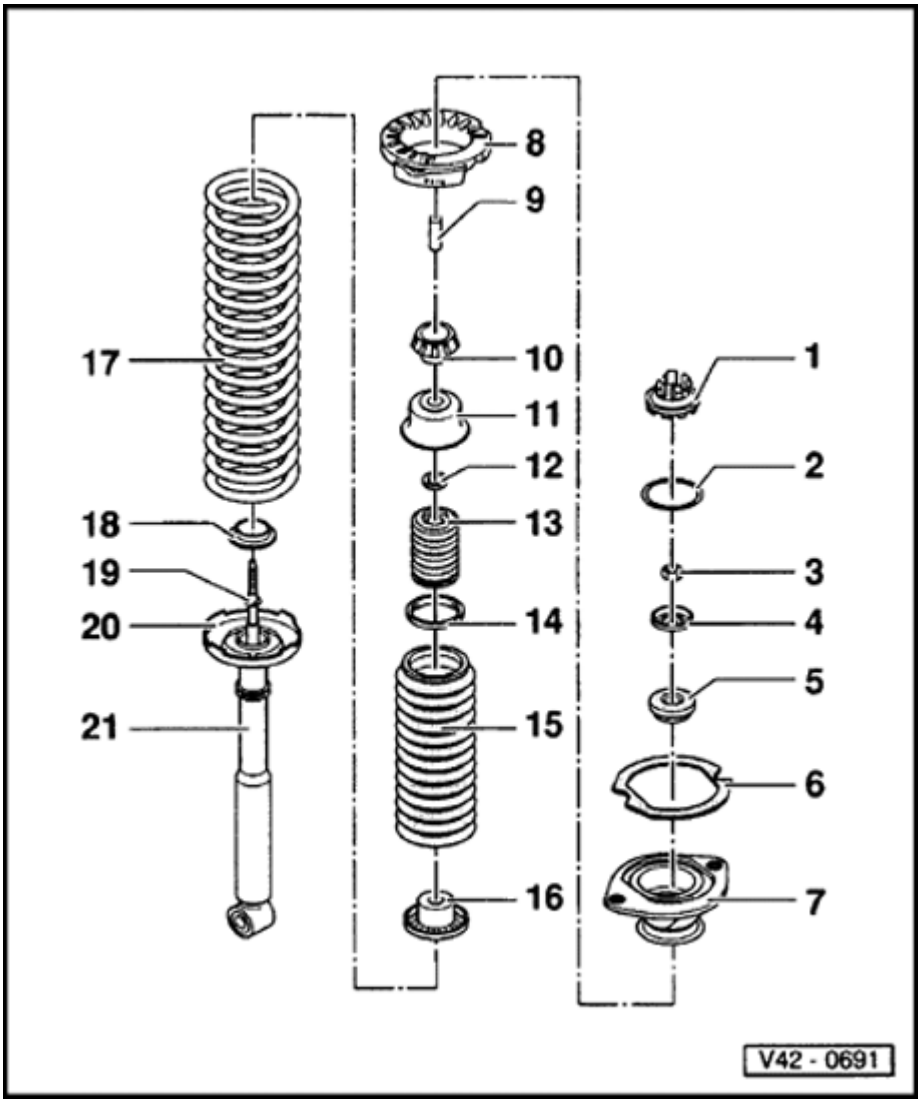

17 - Coil spring

- Removing and installing ⇒ Page 42-13
- Allocation ⇒ Parts catalog

18 - Packing

19 - Circlip

20 - Lower spring plate

- Installation position ⇒ Fig. 1

21 - Shock absorber

- Can be replaced individually
- Removing and installing ⇒ Page 42-4 and ⇒ Page 42-37
- Check shock absorber for leaks and noises
- Application see Parts catalog

42-56

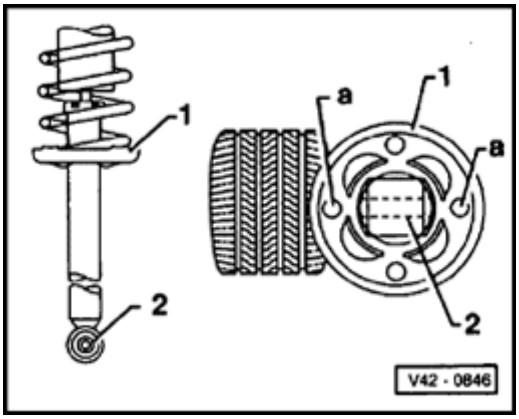

Fig. 1 Lower spring plate, installation position

1 - Lower spring plate

2 - Shock absorber eye bushing

The spring plate must be installed so that the holes "a" align with the bushing -2- in the shock absorber eye. Otherwise, in extreme driving situations spring plate -1- could contact the tire.

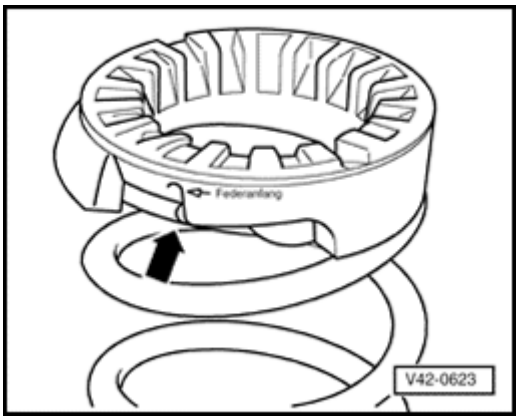

Fig. 2 Spring seat, installation position

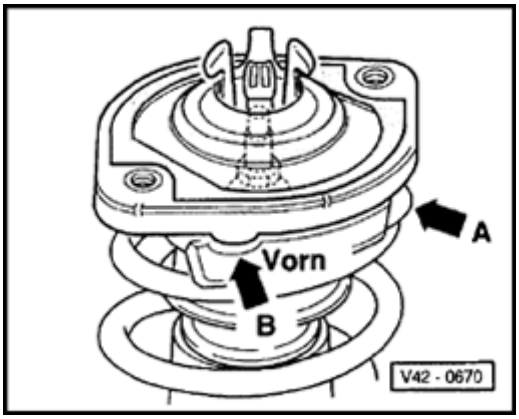

Fig. 3 Suspension strut mounting to spring seat, installation position

The upper suspension strut mounting and the spring seat (arrow A) both have markings (arrow B). These must be installed pointing forward, otherwise damage will occur to the suspension strut piston rod.

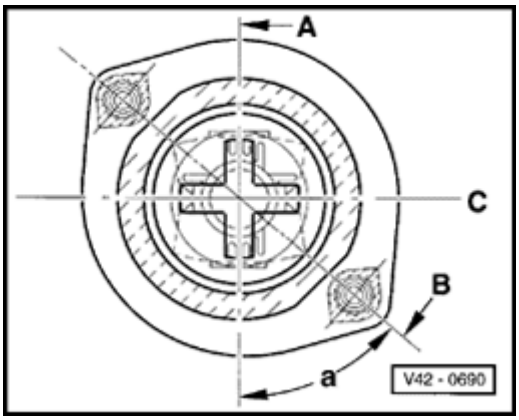

Fig. 4 Suspension strut mounting to shock absorber bushing, aligning

-A- Shock absorber bushing axis

-B- Suspension strut mounting axis

-C- Cap axis at 90° to shock absorber bushing axis -A-.

42-58

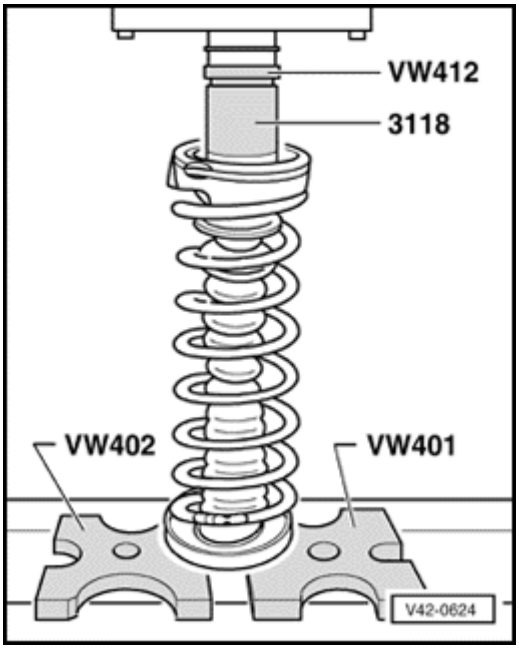

Fig. 5 Cap, pressing into suspension strut mounting

42-59

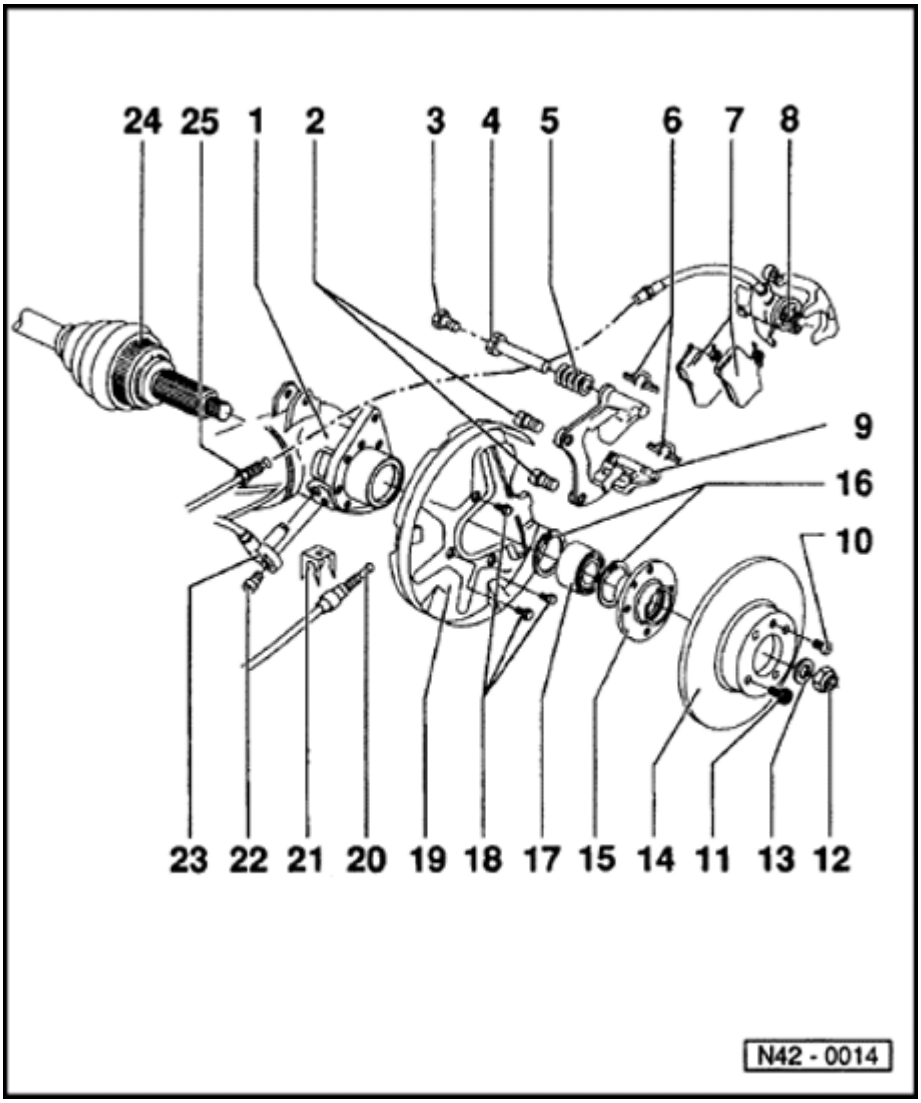

Wheel bearings, servicing - disc brakes (four wheel drive vehicles)

Note:

If a vehicle has to be moved after removing the drive shaft, first install an outer joint and tighten to 50 Nm (37 ft lb). Otherwise the wheel bearing will be damaged.

1 - Control arm

2 - Self locking hex socket head bolt, 60 Nm (44 ft lb)

3 - Self locking hex bolt, 35 Nm (26 ft lb)

- Always replace
- When loosening and tightening counter-hold on guide pins

42-60

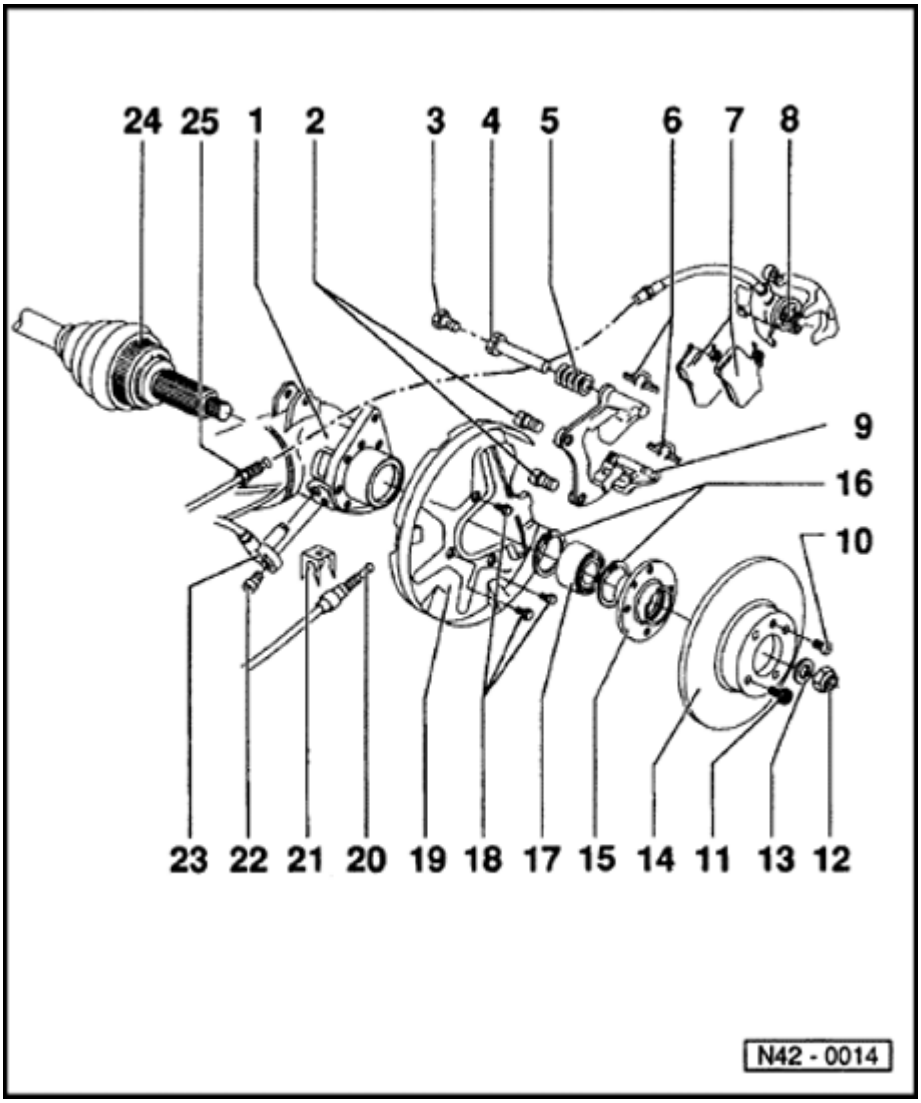

4 - Guide pins

5 - Protective cap

6 - Pad securing springs

- Always replace when changing pads

7 - Brake pads

- Repair information

⇒ *Repair Manual, Suspension, Wheels, Brakes, Steering, Repair Group 46*

8 - Brake caliper

- Servicing

⇒ *Repair Manual, Suspension, Wheels,Brakes, Steering, Repair Group 47*

9 - Pad carrier

10 - Screw

11 - Wheel bolt, 110 Nm (81 ft lb)

42-61

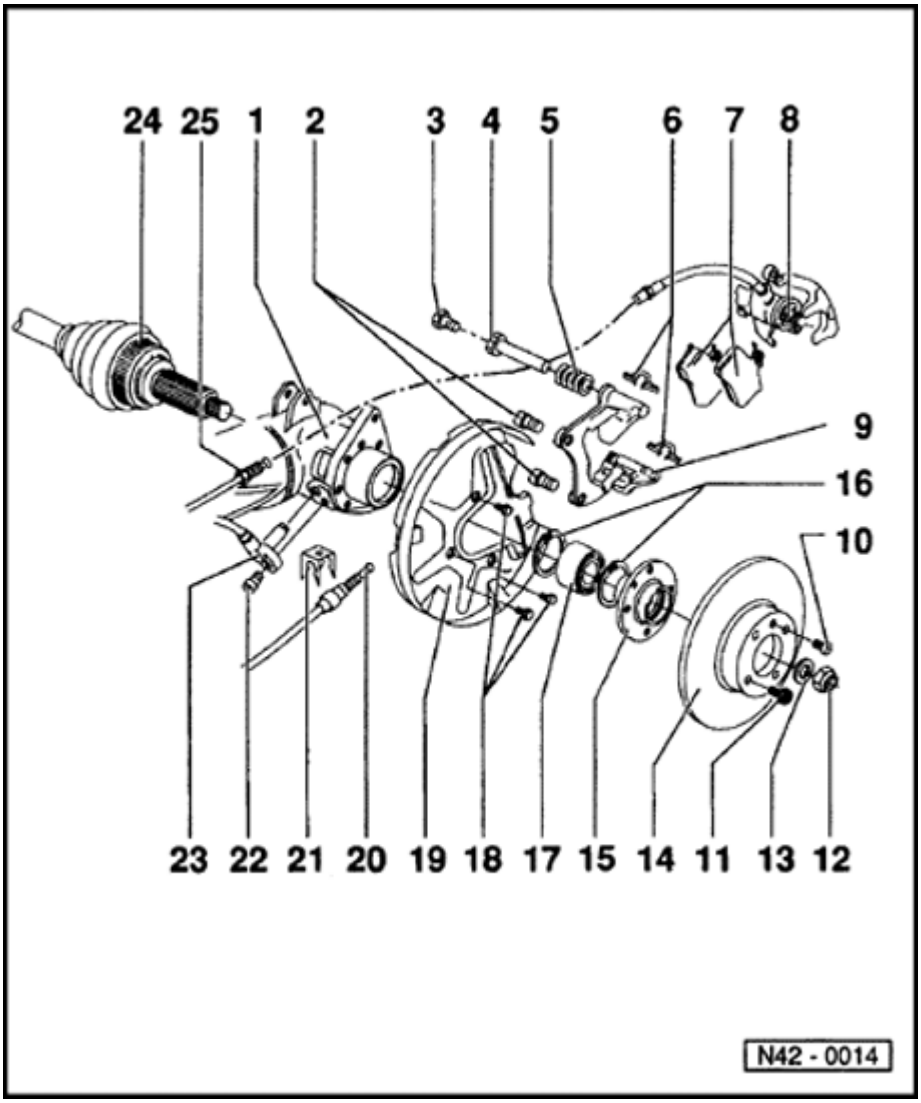

12 - Self-locking hex nut

- Always
- Tighten to 90 Nm (66 ft lb) and turn 45° further ($^1/_8$ turn)
- To tighten use recommend angle measuring wrench VAG 1756 or equivalent
- Before installing nut on outer joint remove any paint remains and/or corrosion from threads.

13 - Shim

14 - Brake disc

- Repair information

⇒ *Repair Manual, Suspension, Wheels, Brakes, Steering, Repair Group 46*

15 - Hub

- Pressing out ⇒ Fig. 1
- Pulling off inner race ⇒ Fig. 3
- Pressing in ⇒ Fig. 5

42-62

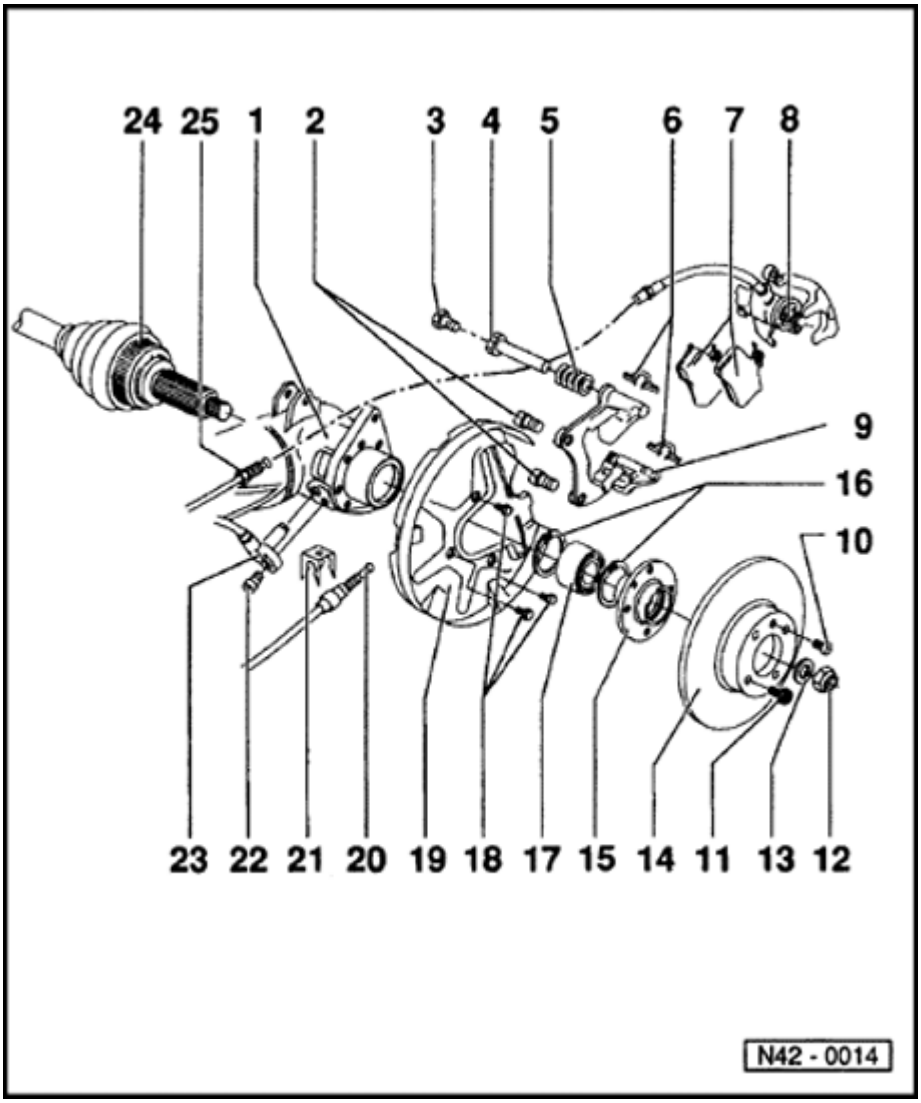

16 - Circlip

- Ensure seated correctly

17 - Wheel bearing

- 72 mm diameter
- Pressing out ⇒ Page 42-64
- Pressing in ⇒ page. ⇒ Page 42-65

18 - Hex bolt, 10 Nm (7 ft lb)

19 - Backing plate

20 - Parking brake cable

- Adjusting parking brake ⇒ Page 46-36

21 - Spring clip

22 - Hex socket head bolt, 10 Nm (7 ft lb)

23 - Speed sensor

- Before inserting, clean and coat with lubricating paste G 000 650

42-63

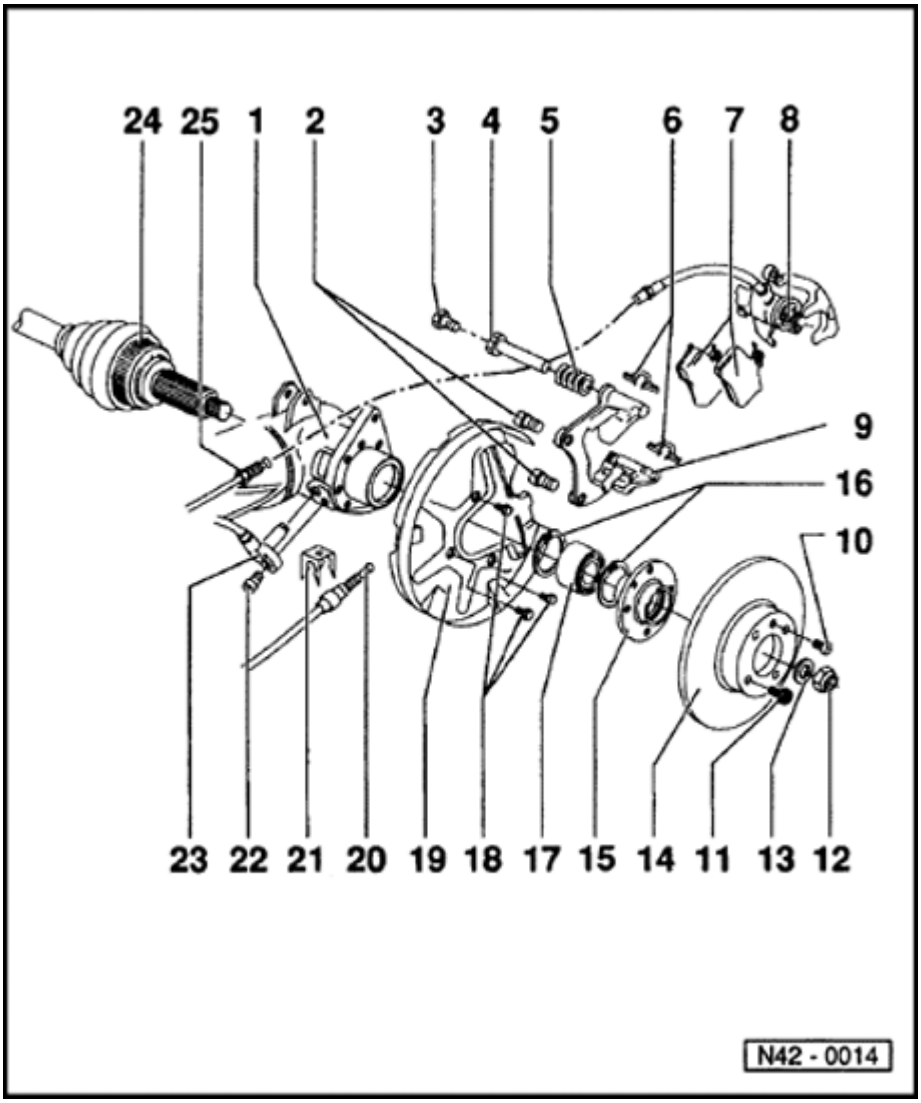

24 - Drive shaft with speed sensor rotor

- Removing and installing drive shaft ⇒ Page 42-37 and ⇒ Page 42-38
- Removing and installing rotor, ⇒ Fig. 6

25 - Brake line

42-64

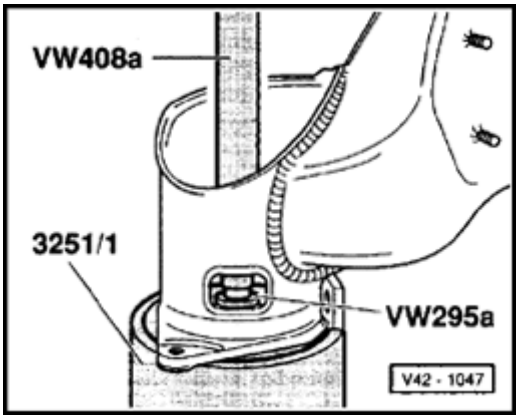

Fig. 1 Hub, pressing out

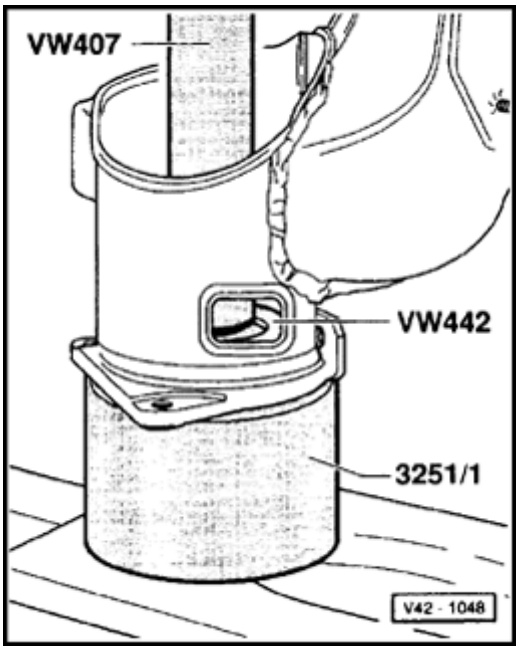

Fig. 2 Wheel bearing, pressing out

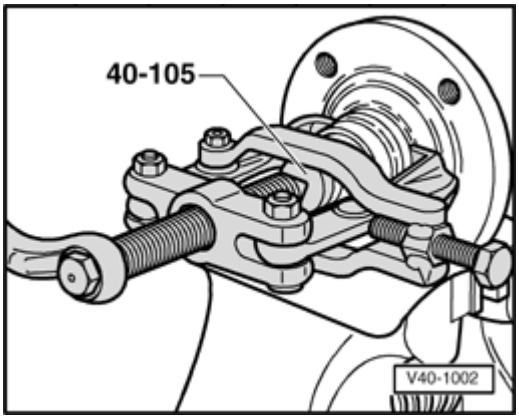

Fig. 3 Inner race, pulling off of hub

Note:

Only use puller with leg clamp e.g. ukko 204-2 (commercial type).

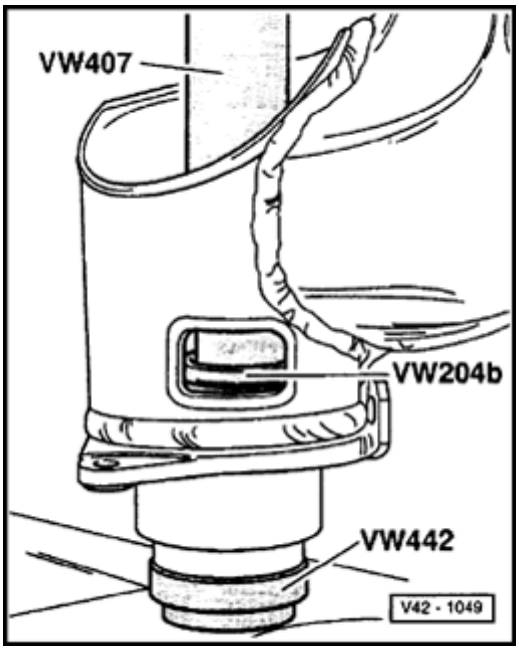

Fig. 4 Wheel bearing, pressing in

Note:

First install lower circlip.

42-66

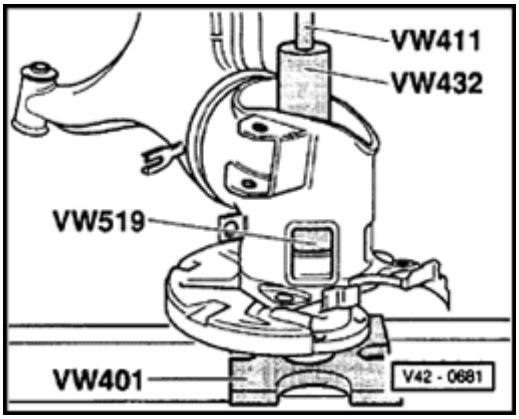

Fig. 5 Hub, pressing in

Note:

First install backing plate on control arm.

Tightening torque: 10 Nm (7 ft lb)

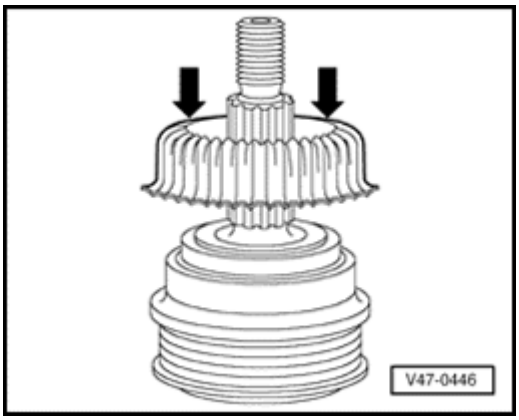

Fig. 6 Speed sensor rotor, pressing in

- Drive rotor off outer joint using a drift (rotor will be destroyed).
- Drive new rotor carefully onto stop using a plastic hammer.

Vehicle alignment

Test requirements:

- Measuring equipment correctly calibrated
- Vehicle unladen[1)]
- Tires inflated to correct pressure
- Vehicle accurately aligned, suspension bounced and rocked several times
- Suspension, steering and steering linkage checked for excessive play and damage.

Note:

- *Vehicle alignment should not be checked before the vehicle has completed 1000 to 2000 km (600 to 1200 miles) as then the coil springs have had time to settle.*
- *The cause of vehicle imbalance may also be, excessive residual imbalance and/or vertical wheel runout.*

[1)] Unladened means: the weight of the vehicle ready for the road (fuel tank completely filled, spare wheel, vehicle tools and vehicle jack).

Vehicle alignment specifications (front wheel drive vehicles)

Front axle	Suspension strut axle	
Engine	up to 85 kW (115 hp)	110 - 128 kW (148 - 172 hp)
Version	Base suspension	Plus suspension
Total toe[1)] (not pressed)	0° ± 10	0° ± 10
Camber[2)] (in straight- ahead position) Maximum permissible difference between sides	-1° 20 ± 20 max. 20	-1° 10 ± 20 max. 20
Toe angle difference at 20° left and right lock	-1° 10 ± 30	-1° 40 ± 30
Caster (not adjustable) Maximum permissible difference between sides	+1° 40 ± 30 max. 30	+3° 20 ± 30 max. 30

1) Only adjust total toe on right toe rod

2) Camber corrections can only be made at the wheel bearing housing/suspension strut connection. Camber adjustment ⇒ Page 44-6 .

Note:

After adjusting steering geometry check position of steering wheel correct if necessary.

44-3

Rear axle	**Torsion beam trailing arm axle**
Engine/version	all
Camber[1)] Maximum permissible difference between sides	-1° 30 ± 10 max. 20
Total toe [1)] (at specified wheel camber) Maximum permissible deviation from direction of travel	+20 ± 10 max. 20

[1)] not adjustable

Vehicle alignment specifications (four wheel drive vehicles)

Front axle	**Suspension strut axle**	
Engine	85 kW (115 hp)	128 kW (172 hp)
Version	Base suspension	Plus suspension
Total toe[1)] (not pressed)	0° ± 10	0° ± 10
Camber[2)] (in straight- ahead position) Maximum permissible difference between sides	-1° 20 ± 20 max. 30	-1° 10 ± 20 max. 20
Toe angle difference at 20° left and right lock	-1° 10 ± 30	-1° 40 ± 30
Caster (not adjustable) Maximum permissible difference between sides	+1° 40 ± 30 max. 30	+3° 20 ± 30 max. 30

[1)] Only adjust total toe on right toe rod

[2)] Camber corrections can only be made at the wheel bearing housing/suspension strut connection. Camber adjustment ⇒ Page 44-6 .

Note:

After adjusting steering geometry check position of steering wheel correct if necessary.

44-5

Rear axle	**Semi-trailing arm axle**
Engine	85 kW, 128 kW (115 hp, 172 hp)
Camber[1)] Maximum permissible difference between sides	-1° 15 ± 30 max. 30
Total toe [1)] (at specified camber) Maximum permissible deviation from direction of travel	+15 ± 20 max. 20

[1)] Camber and toe corrections possible using eccentric rubber mounting ⇒ *Repair Manual, Suspension, Wheels, Brakes, Steering, Repair Group 42* .

44-6

Front wheel camber, adjusting

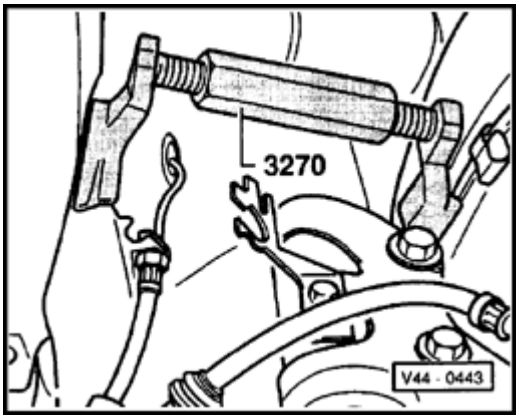

- Install special tool as shown in illustration and slightly pre-tension.
- Loosen suspension strut/wheel bearing housing connection.
- Adjust camber by turning the spindle to specified setting.
- Tighten suspension strut/wheel bearing housing connection.
- Check camber and if necessary, repeat adjustment.

Note:

- *Slight cant of tool is permitted.*
- *Do not move steering with tool in place*
- *Before adjusting camber, it is essential to examine all suspension components for damage (visual inspection) and to replace any damaged parts.*
- *Because bolts with a shank diameter of 11 mm diameter have been installed as standard it is no longer necessary to replace bolts to correct camber.*

44-7

Calculating the direction of travel:

- If both toe figures have the same preceding sign (+/+ or -/-), subtract the smaller figure from the larger figure and divide by 2 ⇒ Example.

Left rear wheel toe	Right rear wheel toe
+ 15	+ 5

15 - 5 = 10

10 : 2 = 5

Deviation from direction of travel = 5

- Add figures with different sign (+/-) and divide by 2 ⇒ Example.

Left rear wheel toe	Right rear wheel toe
+ 15	- 5

15 + 5 = 20

20 : 2 = 10

Deviation from direction of travel = 10

The individual result is the actual alignment deviation from the vehicle longitudinal axis.

Anti-locking Brake System (ABS) and Anti-locking Brake System with Electronic Differential Lock (ABS/EDL) Teves 04

The ABS, ABS/EDL brake system is divided diagonally. The servo-assist is effected pneumatically, by the vacuum brake servo unit.

Located between the brake master cylinder and the vacuum servo unit is a mounting bracket for the hydraulic unit with pump.

The hydraulic unit together with pump, supplies only the anti-locking brake system (ABS) or anti-locking brake system and traction control system (ABS/EDL).

Malfunctions on the ABS, ABS/EDL systems do not influence the brake system and servo. The vehicle can be driven without the ABS, ABS/EDL functions operating.

Notes for repair work on ABS, ABS/EDL

- *Before doing any repair work on the anti-locking system, determine the cause of the malfunction using On Board Diagnostic (OBD).*

⇒ Repair Manual, Brake System On Board Diagnostic (OBD), Repair Group 01

- *Before working on the ABS, ABS/EDL system, disconnect the battery Ground strap. On vehicles with coded radio, obtain cooling.*

- *When working with brake fluid, observe the relevant safety precautions and notes* ⇒ Page 47-27 *.*

- *After work for which the brake system had to be opened, bleed the brake system with brake filler and bleeder unit VAS 5234* ⇒ Page 47-27 *.*

- *During the final road test, make sure that a controlled brake test is performed at least once (pulsations must be felt at the brake pedal).*

- *Absolute cleanliness is required when working on the anti-locking brake system it is not permitted to use any products which contain mineral oils, such as oils, greases etc.*

45-3

- *Thoroughly clean all unions and the adjacent areas before loosening, do not use aggressive cleaning agents such as brake cleaner, petrol, thinners or similar.*
- *Place removed parts on a clean surface and cover.*
- *Do not use fluffy cloth.*
- *Carefully cover or seal open components if repairs cannot be carried out immediately.*
- *Only remove replacement parts from packaging immediately prior to installation.*
- *Only use genuine packed parts.*
- *When the system is open do not work with compressed air and do not move the vehicle.*
- *Make sure that no brake fluid enters harness connectors.*
- *During painting operations, the electronic control module can be exposed to a max. temperature of 95° C (203° F) for only a short period, and to a maximum of 85° C (185° F) for longer periods (approx. 2 hours).*

45-4

Control module, removing and installing

Location

Under the rear seat, left

Note:

Switch off ignition before disconnecting and connecting connectors.

Removing

- Fold up rear seat.
- Press control module securing clips together and pull out.
- To pull connector off control module, release control module locking bar.

Installing

- Install in reverse order.
- Engage connector catch in control module slots (arrow A), press connector on (arrow B) and secure with locking bar (arrow C).

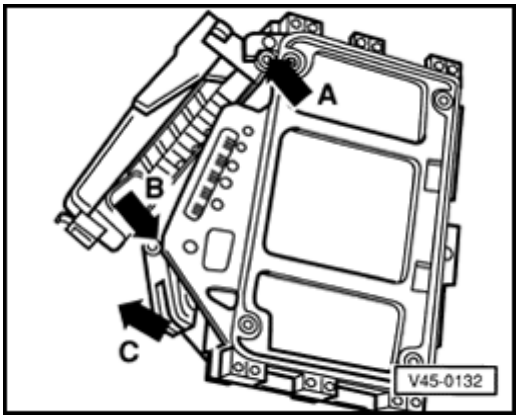

Wheel speed sensor and rotor for speed sensor, removing and installing

Speed sensor

- When installing speed sensor ensure wiring is not twisted.
- Before installing speed sensor, clean mounting hole and coat with lubricating paste, G 000 650.

Rotors

- Before installing check that rotor is clean and undamaged.

Front axle

- Vehicles with base suspension ⇒ Page 40-14 .
- Vehicles with plus suspension ⇒ Page 40-23 .

Rear axle

- Vehicles with rear drum brakes ⇒ Page 42-15 .
- Vehicles with rear disc brakes (front and four wheel drive ⇒ Page 42-24 .

Anti-lock Brake System (ABS) and ABS with Electronic Differential Lock (ABS/EDL), Teves 20 GI

General information

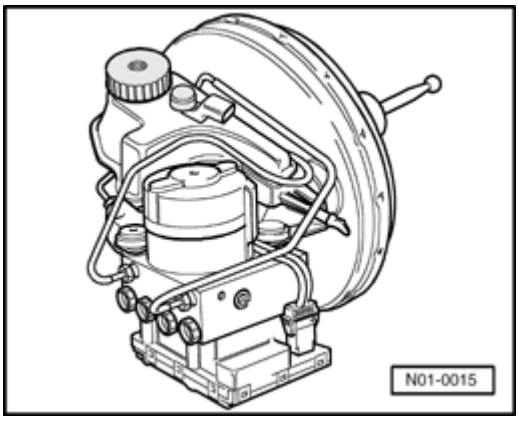

The ABS or ABS/EDL braking system is divided diagonally. Brake pedal pressure is boosted pneumatically, by the vacuum brake booster.

Vehicles with Teves 20 GI ABS or ABS/EDL do not have a mechanical brake pressure regulator. Specially matched software in the ABS control module regulates rear axle brake pressure.

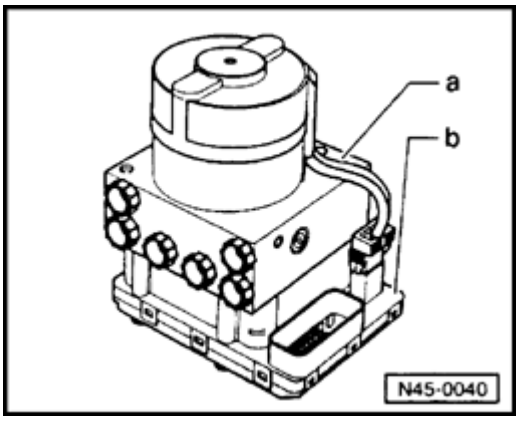

The ABS hydraulic unit -a- and ABS control module -b- together make up one component. Separating them for service is only possible after the assembly has been removed.

New ABS control units supplied as replacement parts from the Parts department are not coded, and require coding after installation:

⇒ *Repair Manual, Brake System On Board Diagnostic (OBD), Repair Group 01*

Malfunctions of the ABS or ABS/EDL system do not influence the brake system or the vacuum brake booster. The conventional brake system remains functional even without ABS.

Before working on the ABS or ABS/EDL system, determine the cause of the malfunction using the On Board Diagnostic (OBD) program % Repair Manual, ABS ABS/EDL On Board Diagnostic.

45-7

Safety precautions

WARNING!

Brake fluid is poisonous.

CAUTION!

- ***Before working on the ABS or ABS/EDL system, disconnect the battery Ground (GND) strap. For anti-theft coded radios, first make sure that the radio code is available.***
- ***Brake fluid must not contact painted parts.***
- ***Brake fluid absorbs moisture from the air and must therefore be replaced every two years. Use only new, approved brake fluid that complies with MVSS 11 DOT 4.***
- ***DO NOT use silicone-brake fluid (DOT 5). Even the smallest traces can cause sever corrosion in the brake system.***
- ***Before doing any welding repairs on the vehicle using electric welding equipment, disconnect the ABS control module.***
- ***After work that requires opening the brake hydraulic system, bleed the system*** ⇒ ***Page 4 - 9*** ***.***

45-8

CAUTION!

- ***During the final road test, make sure that at least one controlled brake test is included (pulsations must be felt at the brake pedal).***
- ***Absolute cleanliness is required when working on the ABS or ABS/EDL system. DO NOT use any products that contain mineral oil, such as oils, greases, etc.***
- ***Thoroughly clean all connections and the immediate vicinity before loosening. DO NOT use aggressive cleaning agents such as brake cleaner, gasoline or thinners.***
- ***Place removed parts on a clean surface and cover. DO NOT use fluffy cloths.***
- ***Carefully seal or cover opened components if a repair cannot be completed immediately.***
- ***After separating the ABS hydraulic unit and ABS control module, always use the plastic foam transportation protection for the valve dome, and always use the sealing plug kit Part No. 1 0 93 311 A.***
- ***Only install replacement parts that were packed in their original packaging. Only remove them immediately before installation.***
- ***When the hydraulic system is open DO NOT work with compressed air in the vicinity and DO NOT move the vehicle.***
- ***Take precautions to make sure that brake fluid does not enter any wiring harness connectors.***

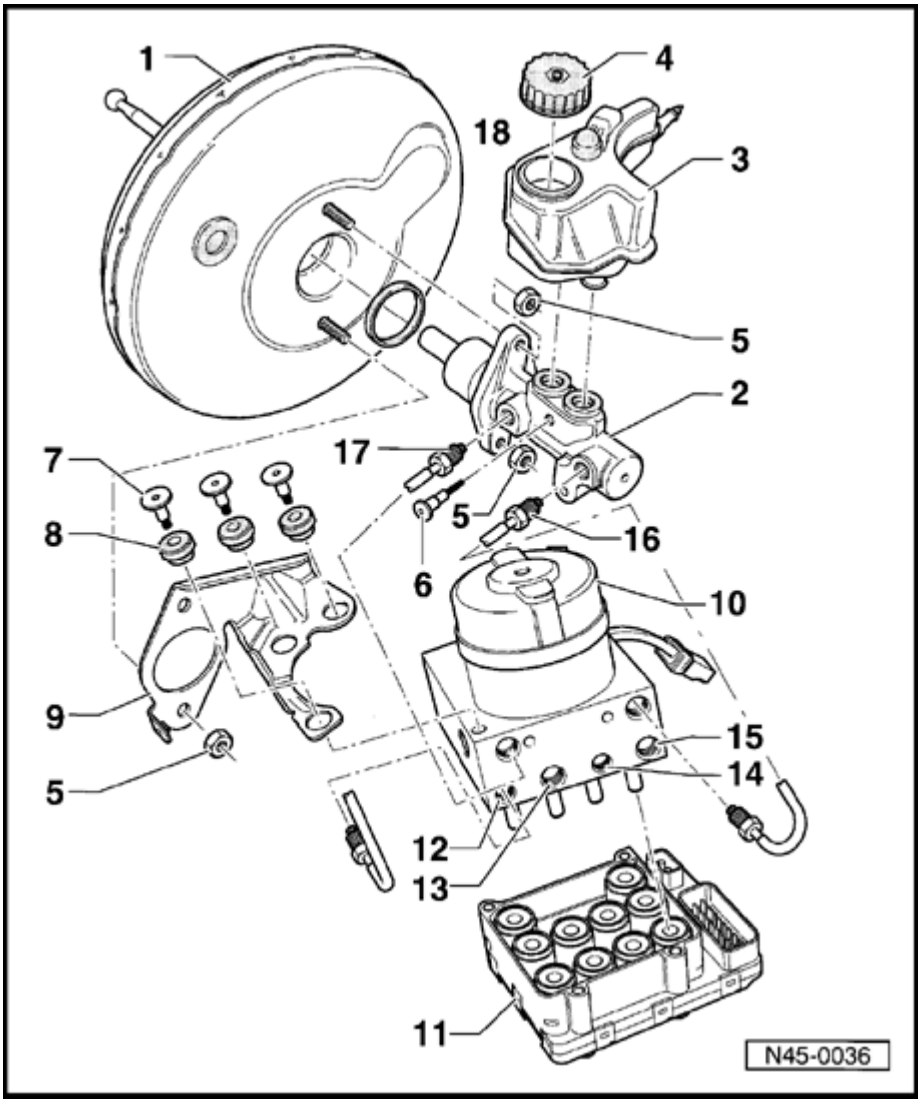

ABS, ABS/EDL hydraulic unit, vacuum brake booster and brake master cylinder (Teves 20 GI), servicing

CAUTION!

DO NOT separate the ABS hydraulic pump from the valve block.

1 - Brake servo (vacuum brake booster)

2 - Brake master cylinder

3 - Brake fluid reservoir

4 - Cap

5 - Self-locking nut

- Always replace
- 25 Nm (18 ft lb)

6 - Torx® socket-head bolt

- T25
- 4 Nm (35 in lb)

7 - Torx® socket-head bolt

- T25
- 8 Nm (71 in lb)

45-10

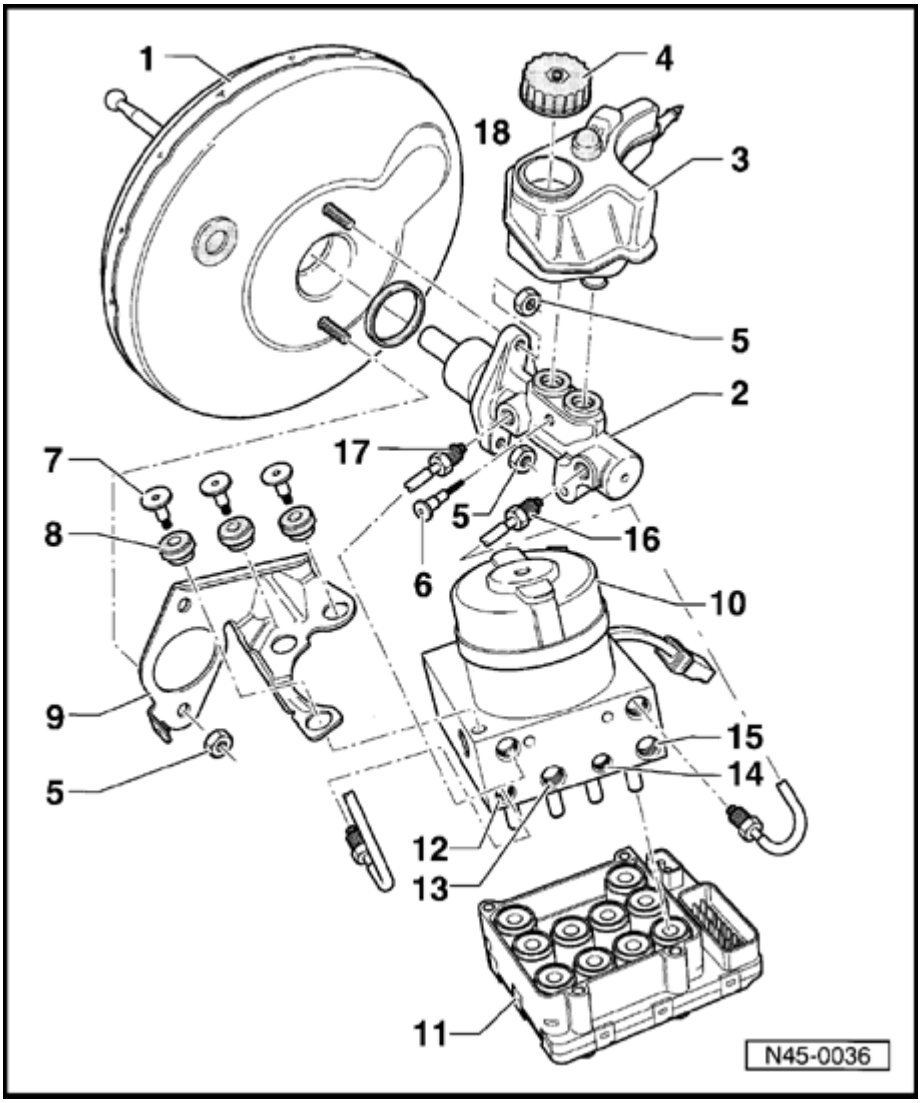

8 - Rubber damper

9 - Retainer

10 - ABS hydraulic unit

11 - ABS control module

12 - Brake line connection

- ABS hydraulic unit to right-front brake caliper

13 - Brake line connection

- ABS hydraulic unit to left-rear brake caliper or wheel cylinder

14 - Brake line connection

- ABS hydraulic unit to right-rear brake caliper or wheel cylinder

15 - Brake line connection

- ABS hydraulic unit to left-front brake caliper

16 - Brake line

- Brake master cylinder (secondary piston circuit) to ABS hydraulic unit

17 - Brake line

- Brake master cylinder (primary piston circuit) to ABS hydraulic unit

ABS hydraulic unit and ABS control module (Teves 20 GI), removing and installing

Carefully read and follow all cautions and warnings ⇒ Page 45-7 before beginning work.

Location

The ABS control module is bolted to the ABS hydraulic unit, located on the left-side of the engine compartment.

CAUTION!

- ***Do not bend brake lines at or near the ABS hydraulic unit.***
- ***Switch ignition OFF when disconnecting and reconnecting the ABS control module connector.***
- ***Part numbers are listed here for reference only. Always check with your Parts department for the latest information.***

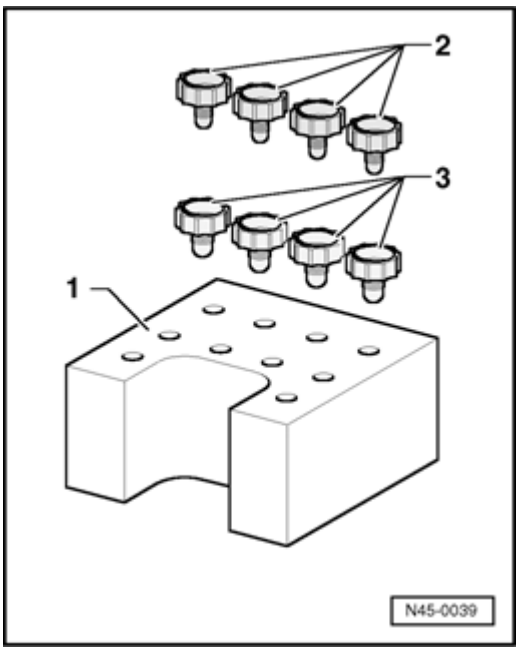

Sealing plug kit Part No. 1H0 698 311 A:

1 - Valve dome transportation protection (plastic foam)

2 - Sealing plugs -M10-

3 - Sealing plugs -M12-

After separating ABS control module from ABS hydraulic unit, always install valve dome transportation protection on hydraulic unit.

Warranty claims for ABS hydraulic units on which the valve dome transportation protection was not used will not be accepted.

Removing

CAUTION!

Determine correct radio anti-theft coding before disconnecting the battery.

- Disconnect battery Ground (GND) strap.

- Remove coolant expansion tank and swing to one side.

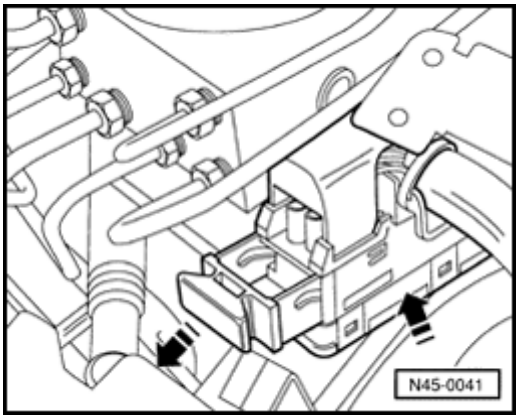

- Release retainer and disconnect ABS control module connector (arrows).
- Connect bleeder hose and bleeder bottle to left-front brake caliper bleeder screw, and open bleeder screw.
- Depress brake pedal at least 60 mm (2-3/8 in.).
- Install brake pedal loading device from special tool VAG 1238B.
- Close left-front bleeder screw.
- Remove heat shield from brake master cylinder.
- Disconnect brake lines from brake master cylinder and ABS hydraulic unit.
- Seal lines and threaded holes with plugs from repair kit ⇒ Page 45-11 .

- Remove Torx® socket-head bolts (T25) from ABS hydraulic unit bracket.

- Remove ABS hydraulic unit/ABS control module assembly.

- Disconnect ABS hydraulic pump connector from ABS control module.

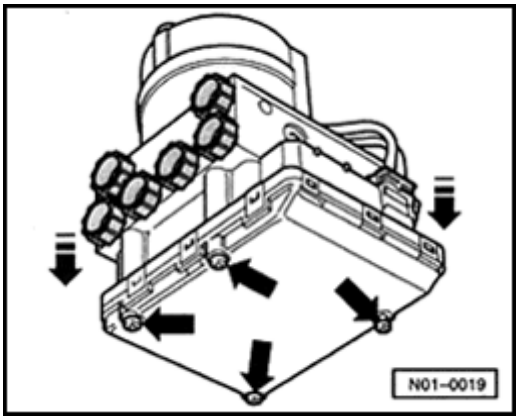

- Remove ABS control module mounting bolts (arrows) and pull off ABS control module.

CAUTION!

- ***Pull control module straight off. Do not tilt.***
- ***Cover control unit magnetic coils with a lint-free cloth.***
- ***After separating the ABS hydraulic unit and ABS control module, always use the plastic foam valve dome transportation protection*** ⇒ ***Page 45-11*** .

Installing

Note:

- *Remove the sealing plugs from a new ABS hydraulic unit one at a time, and only when the corresponding brake line is to be connected.*

- *If the plugs are removed too soon, brake fluid can escape and it can no longer be certain that the unit is sufficiently filled or adequately bled.*

- Mount ABS control module to hydraulic unit using new bolts.

  Tightening torque: 4 Nm (35 in lb)

- Reconnect ABS hydraulic pump connector.

The remainder of the installation procedure is the reverse of removal, with the following additions:

- Bleed brake system ⇒ Page 47-29 .

Note:

For vehicles equipped with ABS/EDL, on which the brake fluid reservoir has been completely empty (e.g. leaks in brake system), it is necessary to initiate the Basic Setting function of the On Board Diagnostic (OBD) program:

⇒ *Repair Manual, Brake System On Board Diagnostic (OBD), Repair Group 01*

Otherwise the standard brake bleeding procedures apply.

- Code ABS control module:

⇒ *Repair Manual, Brake System On Board Diagnostic (OBD), Repair Group 01*

Tightening torques

ABS control unit to ABS hydraulic unit	4 Nm	(35 in. lb)
ABS hydraulic unit to bracket	8 Nm	(71 in. lb)
(Torx® T25 socket-head bolts)		
Brake master cylinder to vacuum booster	25 Nm	(18 ft lb)
Heat shield to brake master cylinder	8 Nm	(71 in. lb)
Brake lines to ABS hydraulic unit		
M10 x 1	15 Nm	(11 ft lb)
M12 x 1	15 Nm	(11 ft lb)

Brake hydraulic system, bleeding and filling

Vehicles with ABS/EDL

For vehicles with ABS/EDL, when the brake fluid reservoir has been completely emptied (e.g. due to leaks in the brake system) it is necessary to initiate the "Basic Setting" function of the On Board Diagnostic (OBD) program.

⇒ *Repair Manual, Brake System On Board Diagnostic (OBD), Repair Group 01*

Otherwise the standard brake bleeding procedures apply ⇒ Page 47-29 .

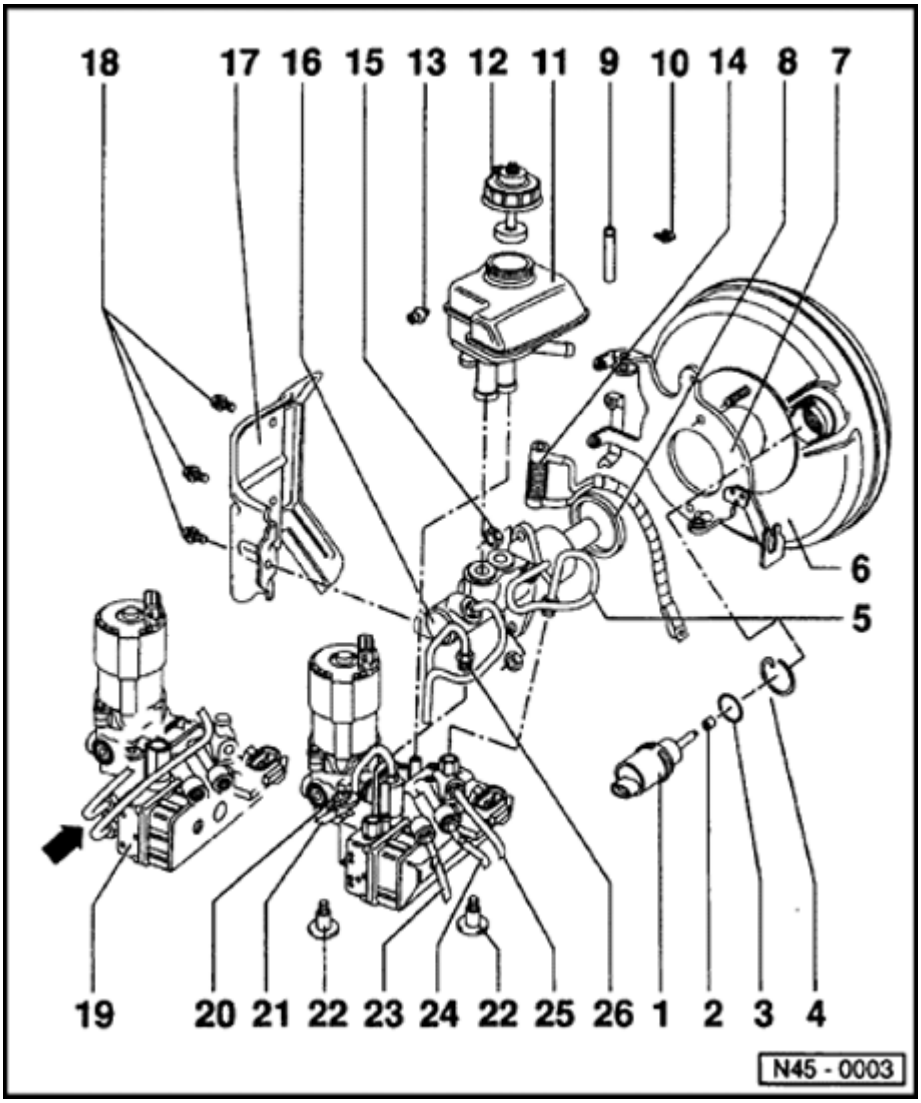

Assembly overview - hydraulic unit, brake servo/brake master cylinder

Note:

- *Pump and valve block must not be separated from one another.*
- *Illustration shows an exploded view of the ABS/EDL unit. Servicing of ABS unit is identical. Distinguishing features*

⇒ *Repair Manual, Brake System On Board Diagnostic (OBD), Repair group 01*

1 - Brake Pedal Position Sensor

- Removing and installing ⇒ Page 45-25 .
- Checking

45-19

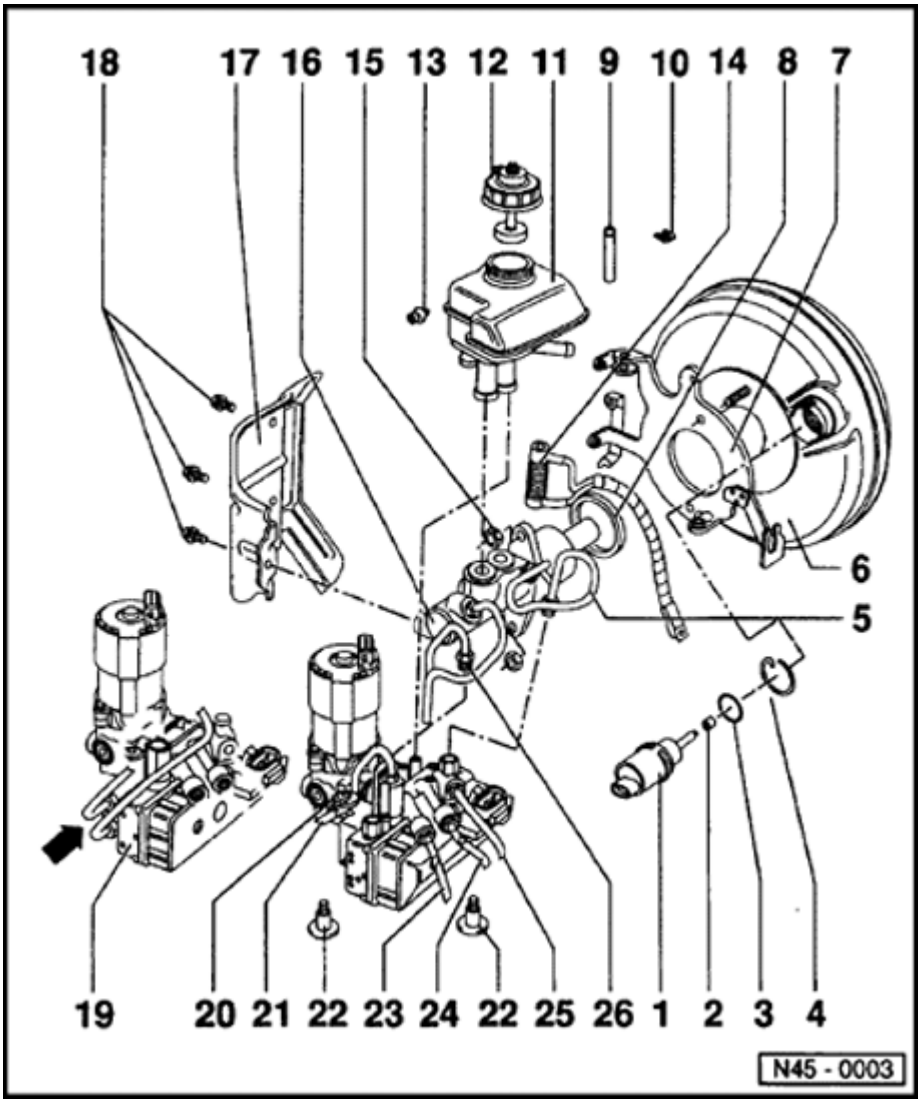

2 - Spacer cap

- Various versions ⇒ Page 45-25

3 - Sealing ring

- Always replace

4 - Circlip

- Always replace

5 - Brake line

- Brake master cylinder/primary piston circuit to hydraulic unit

6 - Brake servo

7 - Carrier plate

8 - Sealing ring

9 - Pin

10 - Securing clip

11 - Brake fluid reservoir

45-20

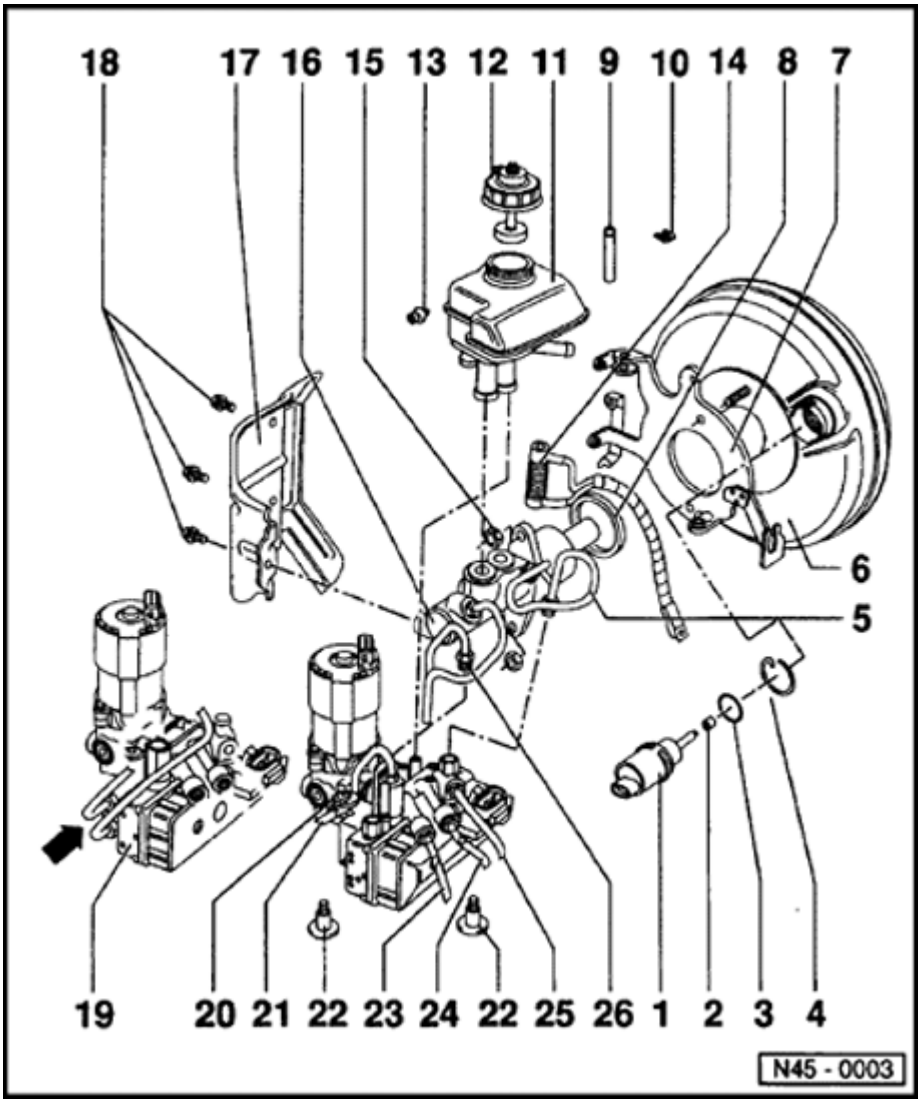

12 - Cap

13 - Hex socket head screw for brake fluid reservoir

14 - Series resistor

- Only on vehicles with ABS/EDL
- Checking

⇒ *Repair Manual, Brake System On Board Diagnostic (OBD), Repair group 01*

15 - Self-locking hex nut, 25 Nm (18 ft lb)

16 - Tandem brake master cylinder

17 - Protective plate

18 - Hex bolt for protective plate

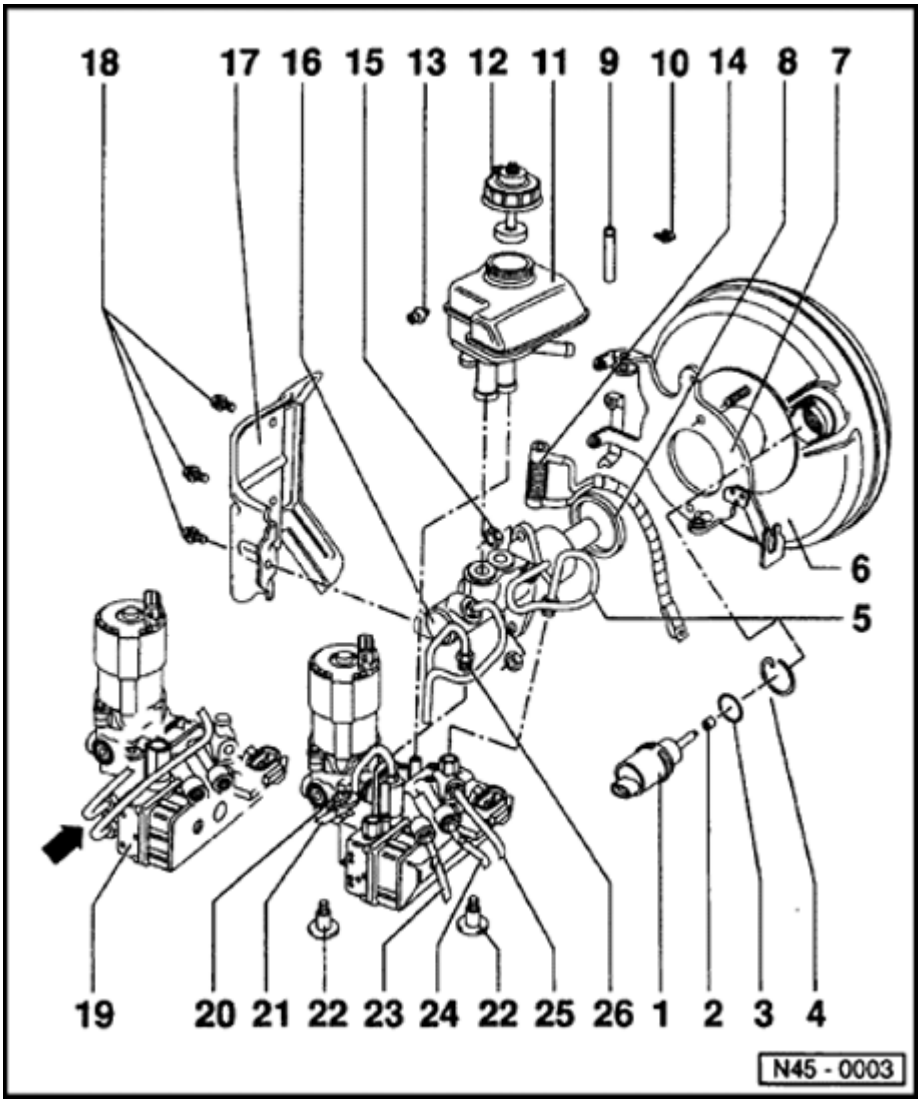

19 - ABS Hydraulic unit

- Connections (arrow) show pipe work from tandem master cylinder to ABS hydraulic unit
- Removing and installing ⇒ Page 45-23

20 - ABS/EDL Hydraulic unit

- Removing and installing ⇒ Page 45-23

21 - Brake line connection

- Hydraulic unit to front right brake caliper
- Thread connection: M10 x 1, 15 Nm (11 ft lb)

22 - Torx bolts (T 25)

23 - Brake line connection

- Hydraulic unit to rear left wheel cylinder
- Thread connection: M10 x 1, 15Nm (11 ft lb)

45-22

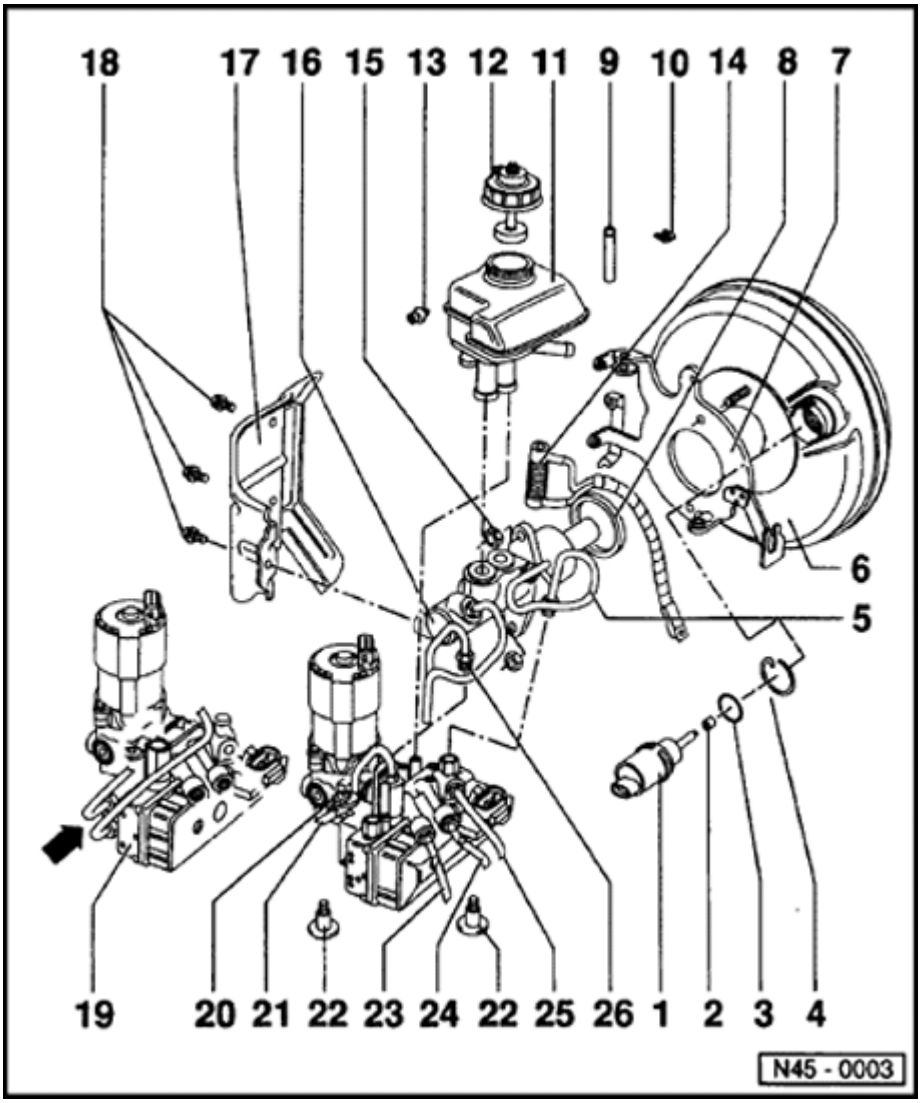

24 - Brake line connection

- Hydraulic unit to rear right wheel cylinder
- Thread connection: M12 x1, 18 Nm (13 ft lb)

25 - Brake line connection

- Hydraulic unit to front left brake caliper
- Thread connection: M10 x1, 15 Nm (11 ft lb)

26 - Brake line

- Master brake cylinder/secondary piston circuit to hydraulic unit

Hydraulic unit, removing and installing

Note:

For easier disassembling and assembling, it is more practical to remove the hydraulic unit complete with brake servo and brake master cylinder.

Removing

- Disconnect battery Ground (GND) strap.
- Separate all electrical connections on ABS unit.
- Remove as much brake fluid as possible from brake fluid reservoir using a suction bottle.
- Disconnect brake lines from ABS hydraulic unit and seal threaded holes with plugs from repair kit, Part No. 1HO 698 311.
- Remove left-hand trim under instrument panel.
- Disconnect brake pedal from brake servo unit ⇒ Page 46-44 .

- Remove nuts from brake servo/bulkhead.

- Carefully remove hydraulic unit and brake servo with brake master cylinder from engine compartment.

Installing

Note:

- *Hydraulic units supplied as replacement parts are already filled with hydraulic fluid and bled.*

- *Only remove sealing plugs on hydraulic unit when the relevant brake line is going to be connected.*

- *If the sealing plugs are removed too early, brake fluid can escape, it is then no longer guaranteed that the unit is sufficiently filled or adequately bled.*

- Preassemble hydraulic unit and brake servo with tandem master cylinder away from vehicle.

- Secure hydraulic unit, brake servo with tandem master cylinder to bulkhead.

- Connect brake lines.

- Reconnect all electrical connections on ABS unit (ensure correctly connected).

- Bleed brake system ⇒ Page 47-27 .

- Install left-hand trim under instrument panel.

45-25

Brake Pedal Position Sensor, removing and installing

Note:

- *The Brake Pedal Position Sensor is only supplied as a repair kit. Apart from the sender, this repair kit contains a sealing ring, circlip and four different spacer caps.*

  - - one white spacer cap

  - - one green spacer cap

  - - one blue spacer cap

  - - one red spacer cap

- *The spacer caps are of differing length.*

- *When replacing the sensor note the color of spacer cap. The new sensor must have the same color cap as the old sensor.*

- *On the brake servo housing in the vicinity of the sever location there is a colored spot, which is identical to that of the spacer cap.*

45-26

Removing

- Release brake servo vacuum by operating the brake pedal several times.
- Remove connector from expansion tank.
- Swing coolant expansion tank to side.
- Pull connector off sensor.

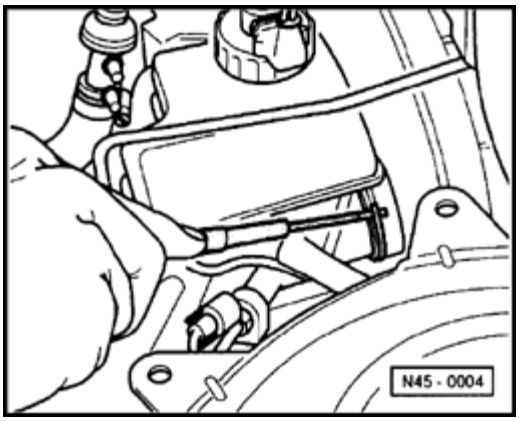

- Expand circlip with a small screwdriver in a clockwise direction and pull sensor (arrow) out of brake servo.

Installing

Note:

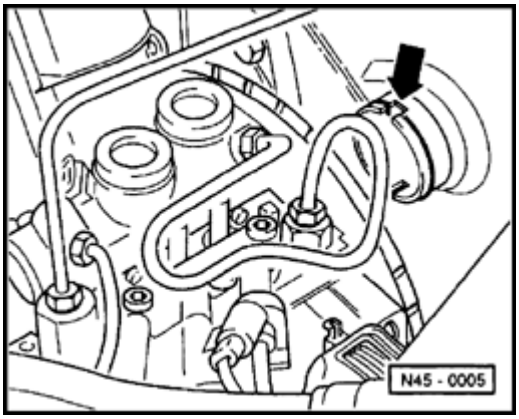

When installing new circlip ensure opening is uppermost - installation position (arrow).

- Install new sealing ring to sensor. (Coat sealing ring with lubricant e.g. soft soap).

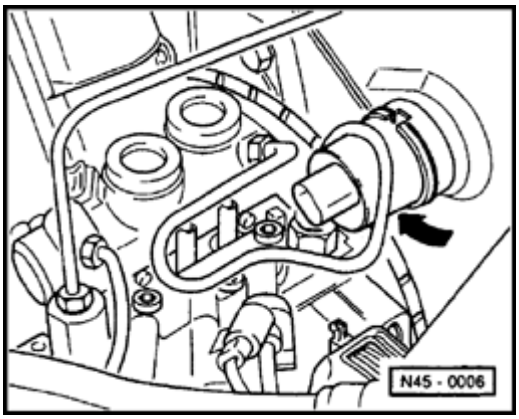

- Sensor notch must point downward when inserting into brake servo and be heard to engage.
- Connect sensor unit connection and ensure correctly located.

Note:

- *To ensure correctly seated pull senor by hand.*
- *Leaks at the sensor sealing ring, result in insufficient braking vacuum and poor engine idling.*
- *For ease of illustration, shows installing the sensor with brake fluid reservoir removed.*

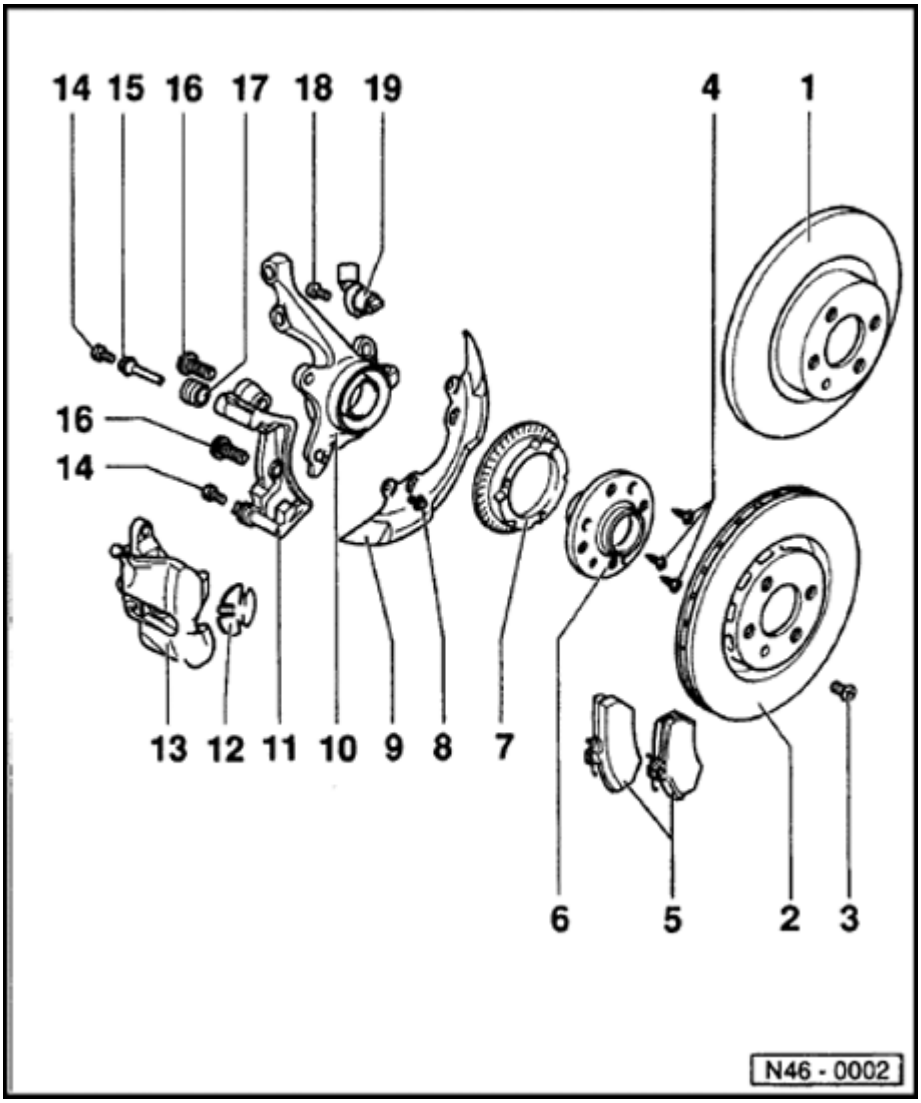

Front brakes, servicing (Girling caliper)

Note:

- *After replacing brake pads, depress brake pedal firmly several times with vehicle stationary so that the brake pads are properly seated in their normal operating position.*
- *To remove brake fluid from the reservoir, use a bleeder bottle which is used only for brake fluid. Brake fluid is poisonous and must on not be siphoned by mouth using a hose*
- *Wheel bolt tightening torque: 110 Nm (81 ft lb)*

46-2

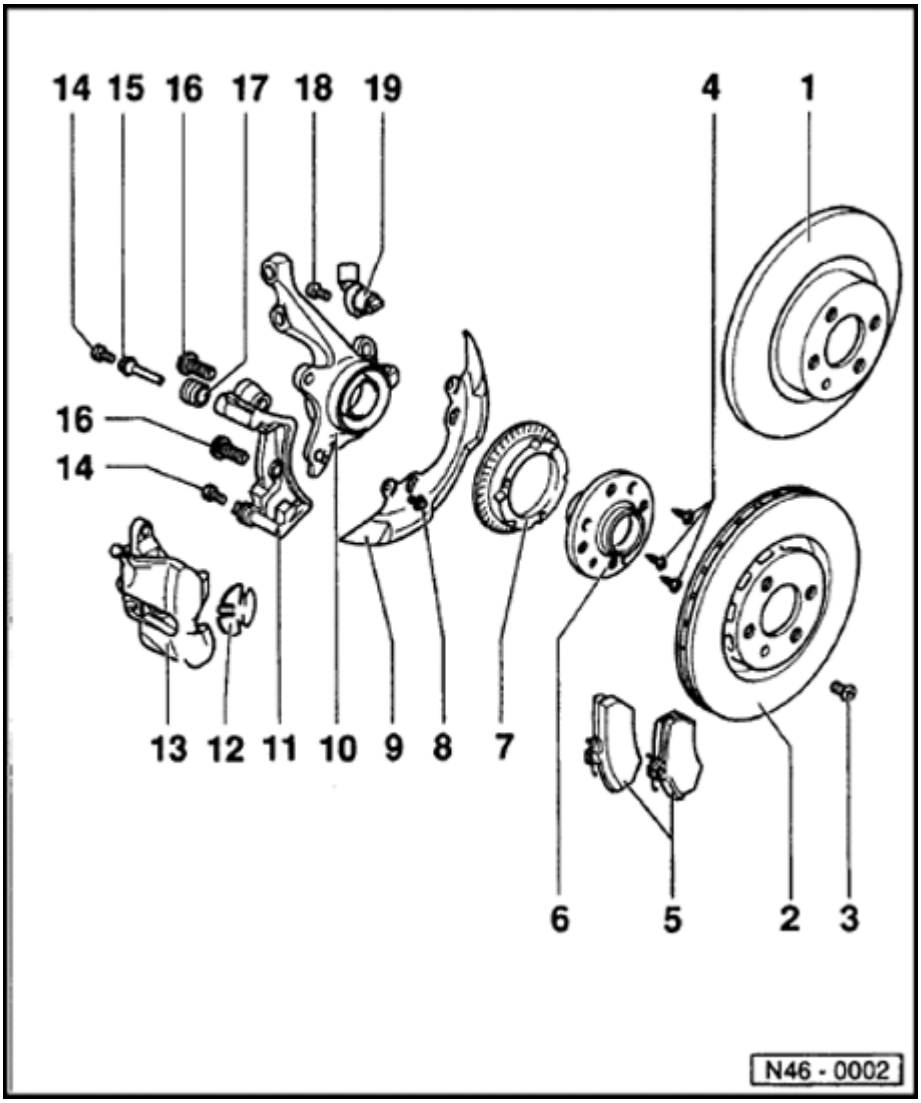

1 - Brake disc, not ventilated

- When worn always replace on both sides
- Brake disc diameter: 256 mm
- Brake disc thickness: 13 mm
- Wear limit: 11 mm

2 - Brake disc, ventilated

- When worn always replace on both sides
- Brake disc diameter: 256 mm
- Brake disc thickness: 20 mm
- Wear limit: 18 mm

3 - Screw

4 - Countersunk screw

- To secure rotor
- Only on vehicles with ABS

46-3

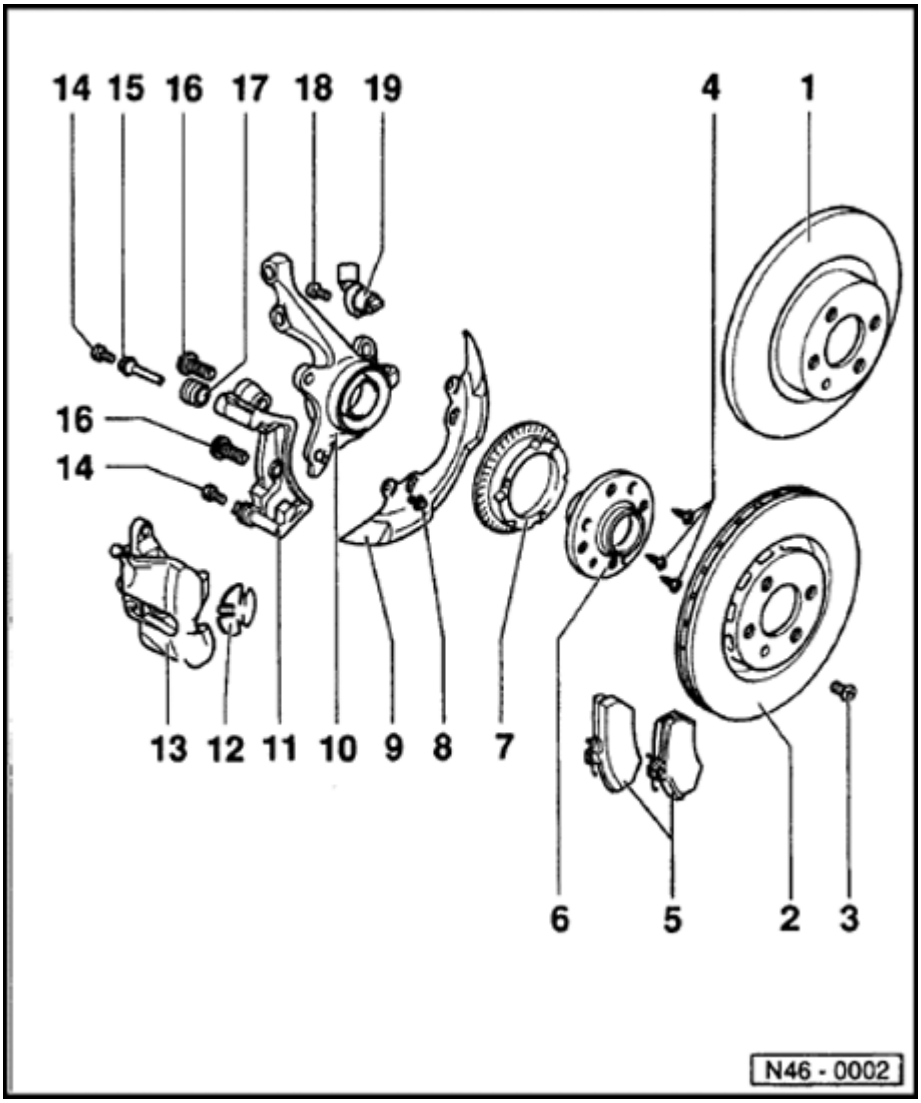

5 - Brake pad

- With brake pad wear indicator
- Always replace on both sides
- Removing and installing ⇒ Page 46-6
- Pad thickness: non-ventilated brake disc, 14 mm
- Pad thickness: ventilated brake disc, 11 mm
- Checking thickness

⇒ *Repair Manual, Maintenance*

- Wear limit: 7 mm (including backplate)

6 - Hub

- Removing and installing ⇒ from ⇒ Page 40-14

7 - Wheel speed sensor rotor

- Only on vehicles with ABS

8 - Hex bolt, 10 Nm (7 ft lb)

9 - Splash plate

46-4

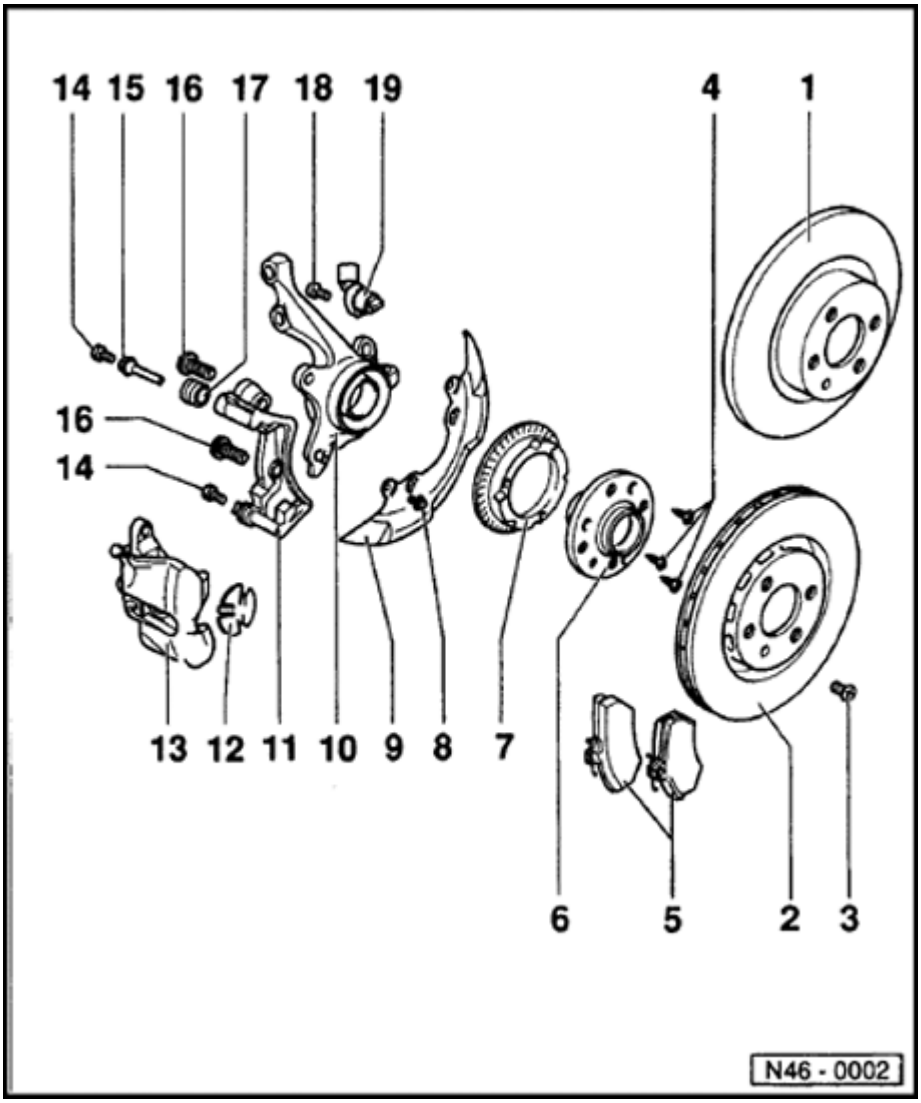

10 - Wheel bearing housing

11 - Brake carrier with guide pins and protective caps

- Supplied as replacement part assembled with sufficient amount of grease on guide pins
- If protective caps are damaged use repair kit
- Use grease packet supplied to lubricate guide pins

12 - Heat shield

- Install in piston

13 - Brake caliper housing

- Do not disconnect brake hose when changing brake pads

46-5

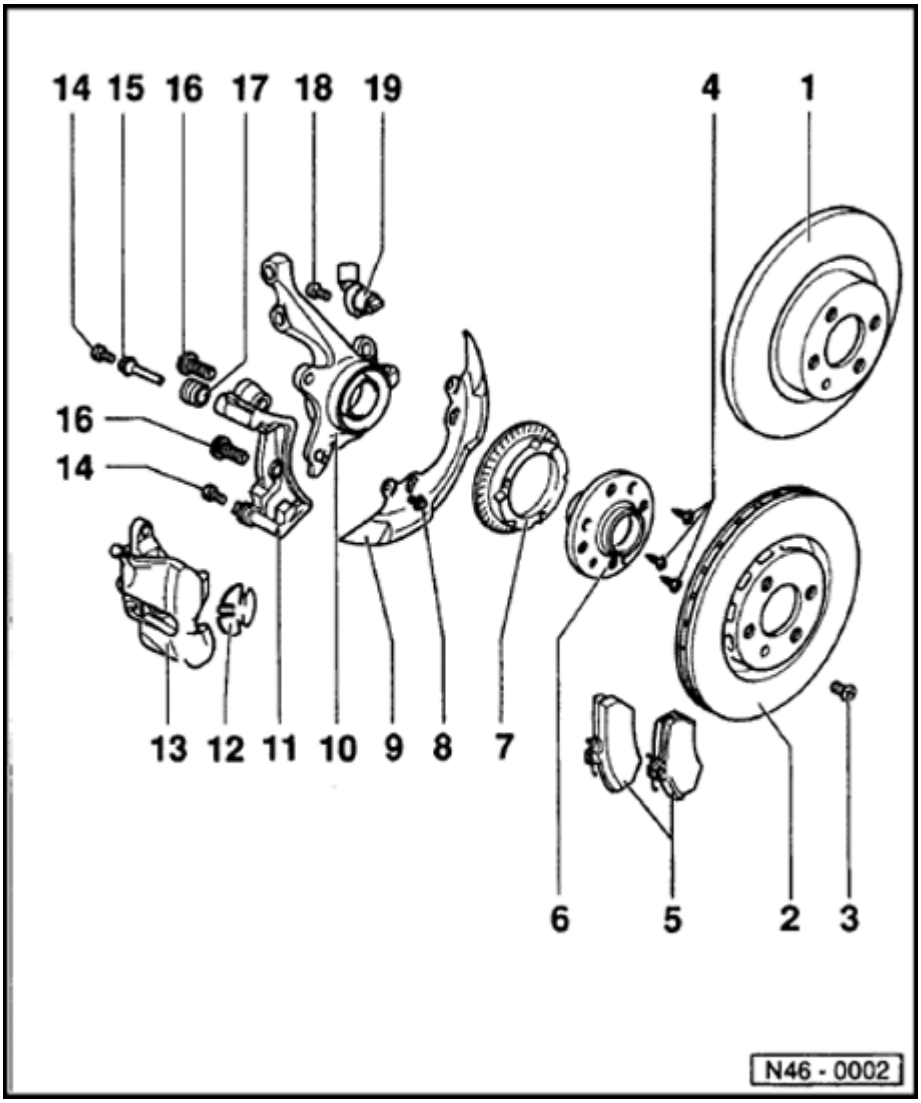

14 - Self-locking hex bolt, 35 Nm (26 ft lb)

- Always replace

15 - Guide pin

16 - Ribbed bolt, 125 Nm (92 ft lb)

17 - Protective cap

18 - Hex socket head bolt, 10 Nm (7 ft lb)

19 - Speed sensor

- Only on vehicles with ABS
- Before inserting sensor clean mounting hole inner surface and coat with lubricating paste, G 000 650

46-6

Brake pads, removing and installing

Removing

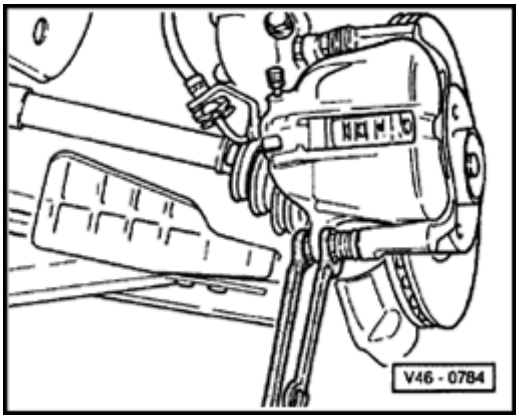

- Remove lower brake caliper housing securing bolt. Counter-hold on guide pin.

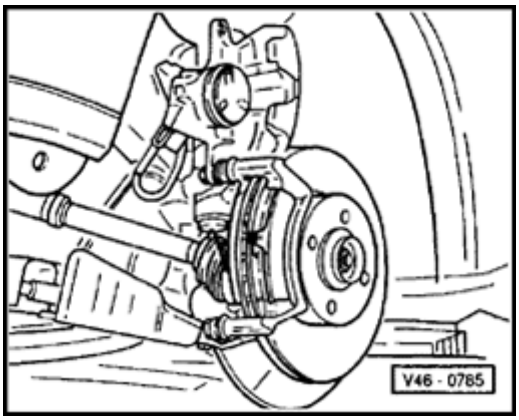

- Swing brake caliper housing upward.
- Remove brake pads.

Installing

Note:

Before inserting new brake pads, press piston back into the cylinder with resetting tool. Before pressing the piston back, remove some brake fluid from the reservoir with a bleeder bottle. If reservoir has been topped up, fluid may overflow and cause damage.

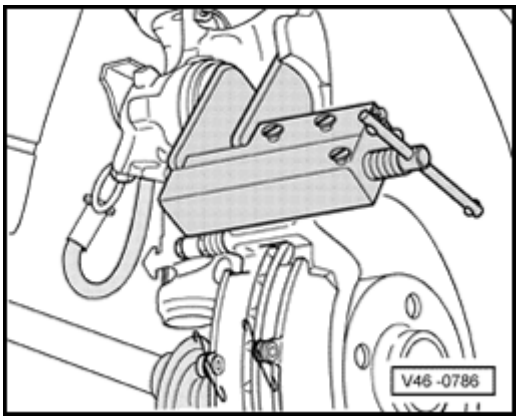

- Press piston back.
- Install brake pads.
- Swing brake caliper housing down and tighten bolt.

Note:

- *The repair kit contains two self-locking bolts which must always be installed.*
- *After replacing the brake pads, depress brake pedal firmly several times with the vehicle stationary so that the brake pads are properly seated in their normal operating position.*

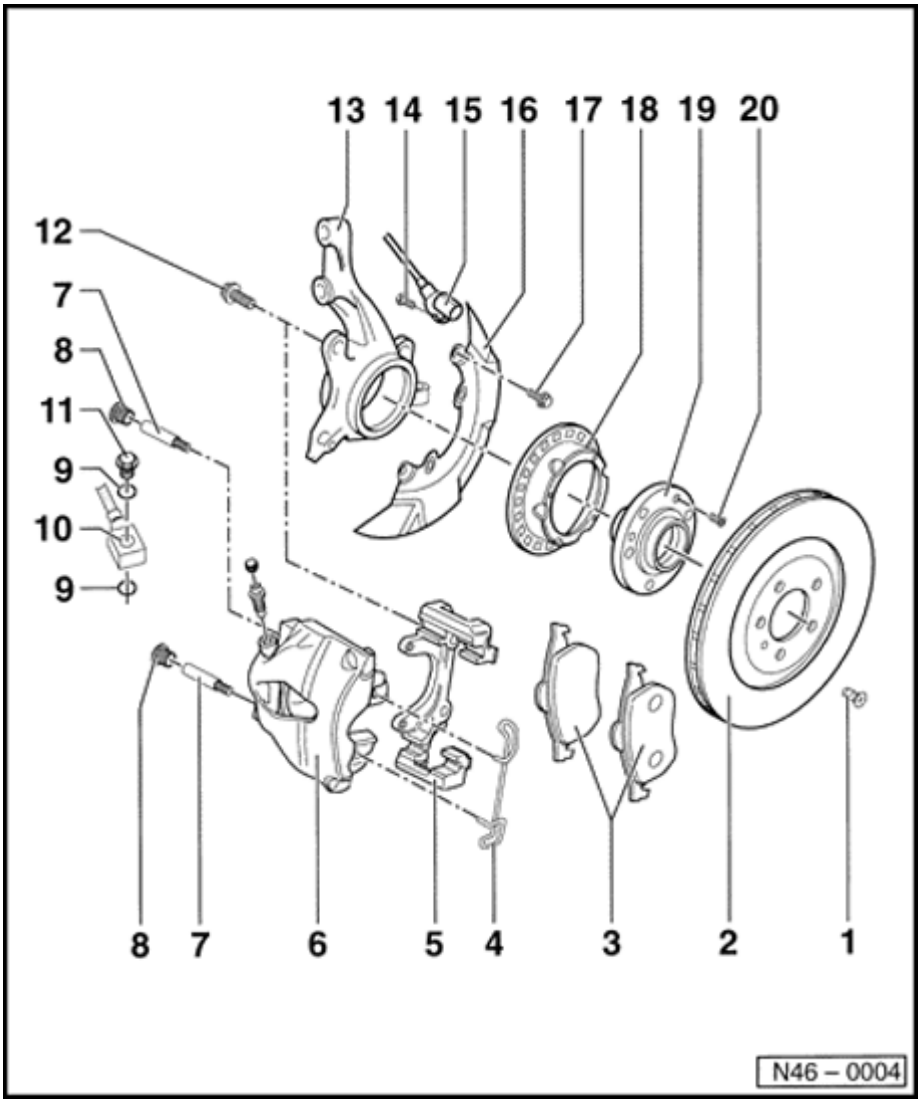

Front brakes, servicing (Teves/Ate)

1 - Screw

2 - Brake disc

- When worn always replace on both sides
- Remove brake caliper prior to removing
- Ventilated brake disc diameter: 288 mm
- Brake disc thickness: 25 mm
- Wear limit: 23 mm

3 - Brake pads

- Always replace on both sides
- Pads are different; pad on piston side has retaining spring
- Removing and installing ⇒ Page 46-12
- Pad thickness: 14 mm
- Checking thickness

⇒ *Repair Manual, Maintenance*

- Wear limit: 7 mm (including backing plate)

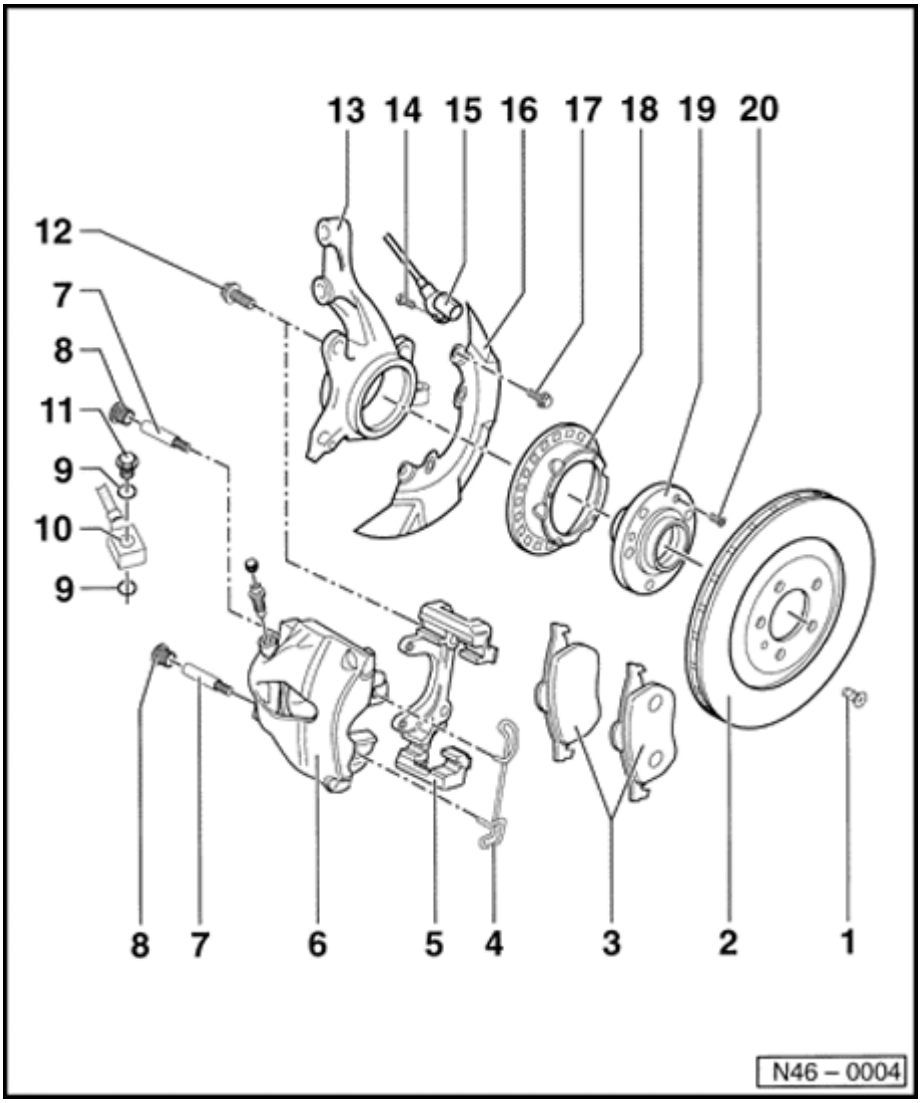

4 - Retaining spring

- Insert in both brake caliper housing drillings

5 - Brake carrier

- Supplied as replacement part assembled with sufficient amount of grease on guide pins
- If protective caps are damaged use repair kit
- Use grease packet supplied to lubricate guide pins

6 - Brake caliper housing

- Do not disconnect brake hose when changing brake pads
- Removing and installing ⇒ Page 46-12

46-10

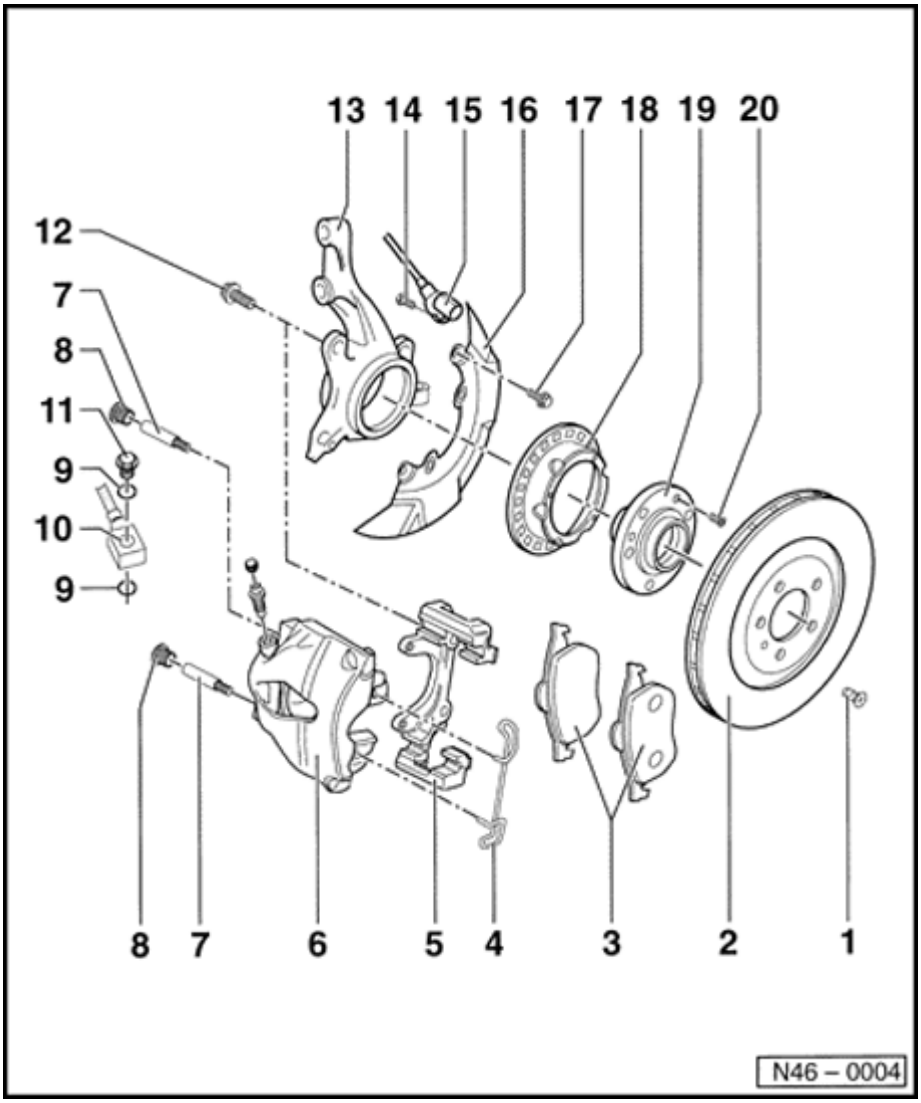

7 - Guide pins, 25 Nm (18 ft lb)

- Removing and installing ⇒ from ⇒ Page 46-12

8 - Protective cap

9 - Seal

- Always replace
- Pry out with suitable tool

10 - Brake hose

11 - Banjo bolt, 30 Nm (22 ft lb)

12 - Ribbed bolt, 125 Nm (92 ft lb)

13 - Wheel bearing housing

14 - Hex socket head bolt, 10 Nm (7 ft lb)

15 - Speed sensor

- Only on vehicles with ABS
- Before inserting sensor, clean mounting hole inner surface and coat with lubricating paste, G 000 650

46-11

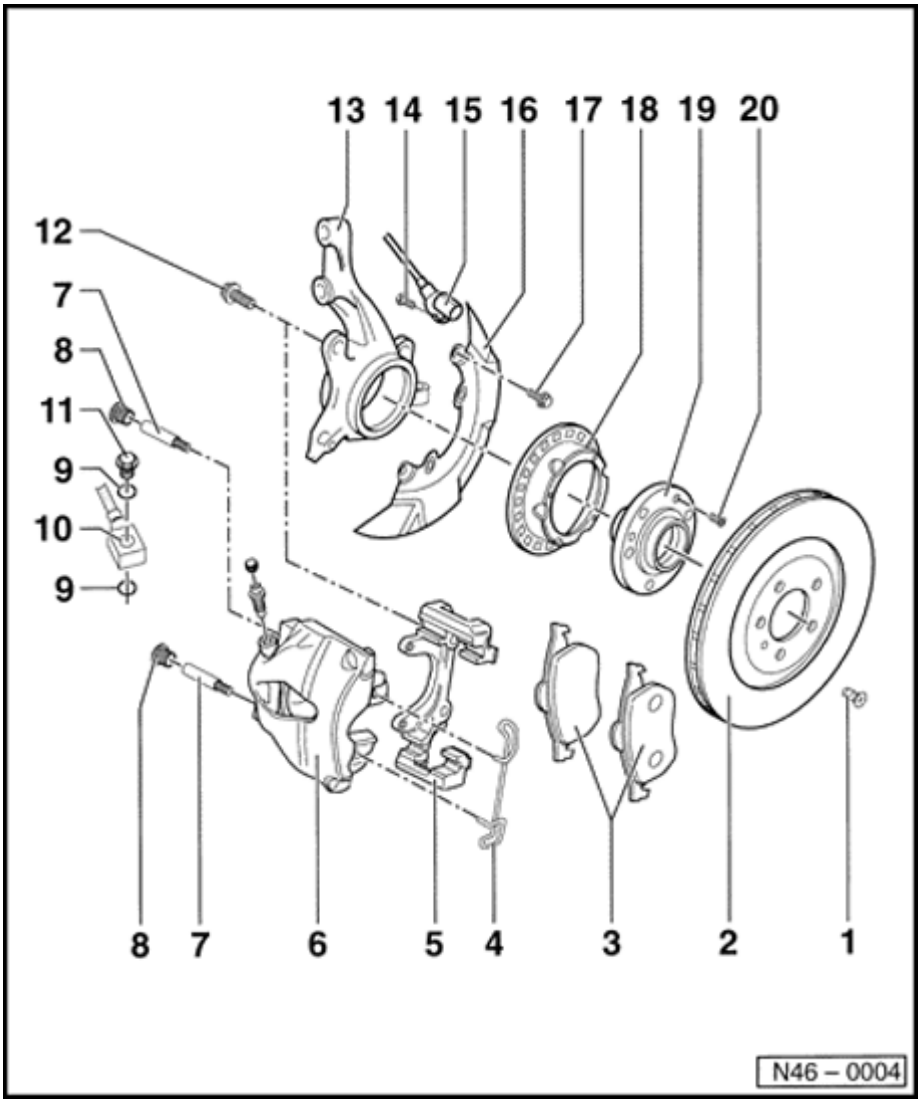

16 - Splash plate

17 - Hex bolt, 10 Nm (7 ft lb)

18 - Speed sensor rotor

- Only on vehicles with ABS

19 - Hub

- Removing and installing ⇒ Page 40-14

20 - Countersunk bolt

46-12

Brake pads, removing and installing

Removing

Note:

If reusing brake pads mark location and install in same position or uneven braking may result.

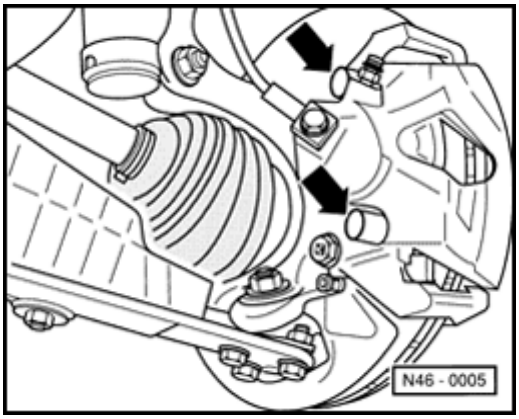

- Remove protective caps.

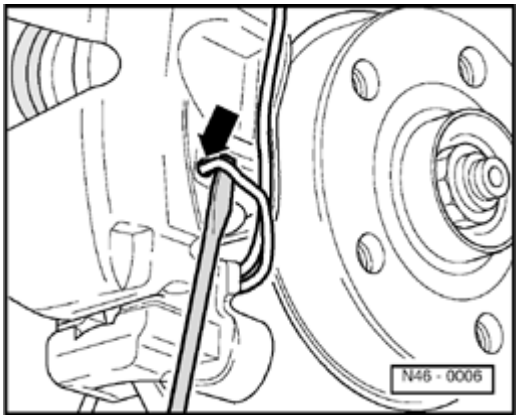

- Pry off brake pad retaining spring from brake caliper housing with a screwdriver and remove.

46-13

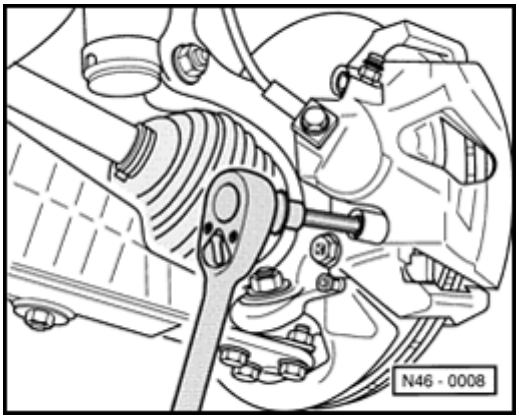

- Remove both guide pins from brake caliper.
- Remove brake caliper housing and lay to one side so that weight of brake caliper does not stress or damage brake hose.
- Take brake pads out of brake caliper housing or from brake carrier.

Installing

Note:

Before installing new brake pads, press piston back into the cylinder with resetting tool. Before pressing the piston back, remove some brake fluid from the reservoir with a bleeder bottle. If reservoir has been topped up, fluid may overflow and cause damage.

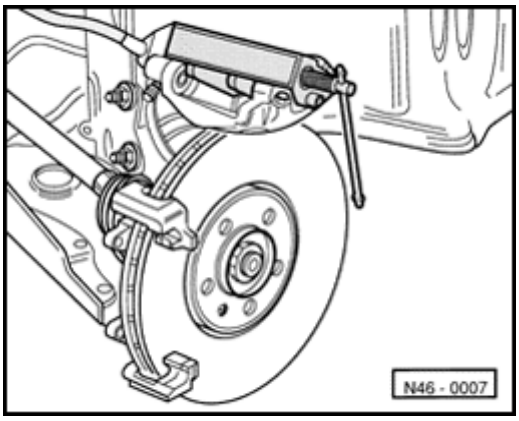

- Pressing piston back.

- Install brake pad with retaining spring in brake caliper housing (piston).
- Install outer brake pad in brake carrier.
- Secure brake caliper housing with both guide pins to brake carrier.
- Install both protective caps.
- Install retaining spring into brake caliper housing.

Note:

After replacing the brake pads, depress brake pedal firmly several times with the vehicle stationary, so that the brake pads are proper/y seated in their normal operating position.

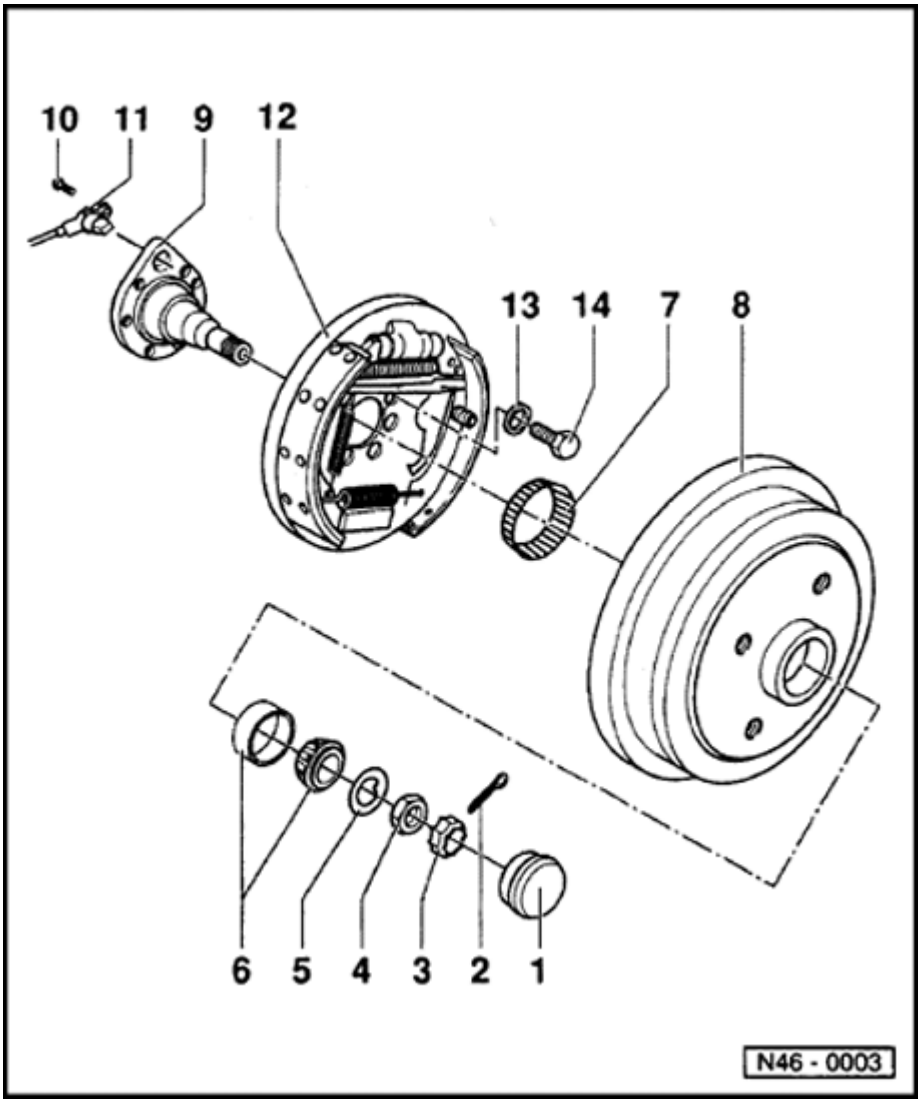

Rear wheel brakes, servicing (drum brakes)

Notes ⇒ Page 42-15

1 - Grease cap

- Removing and installing ⇒ from ⇒ Page 42-19

2 - Cotter pin

- Always replace

3 - Locking ring

4 - Hex nut

- Adjusting wheel bearing play ⇒ Page 42-20

5 - Thrust washer

46-16

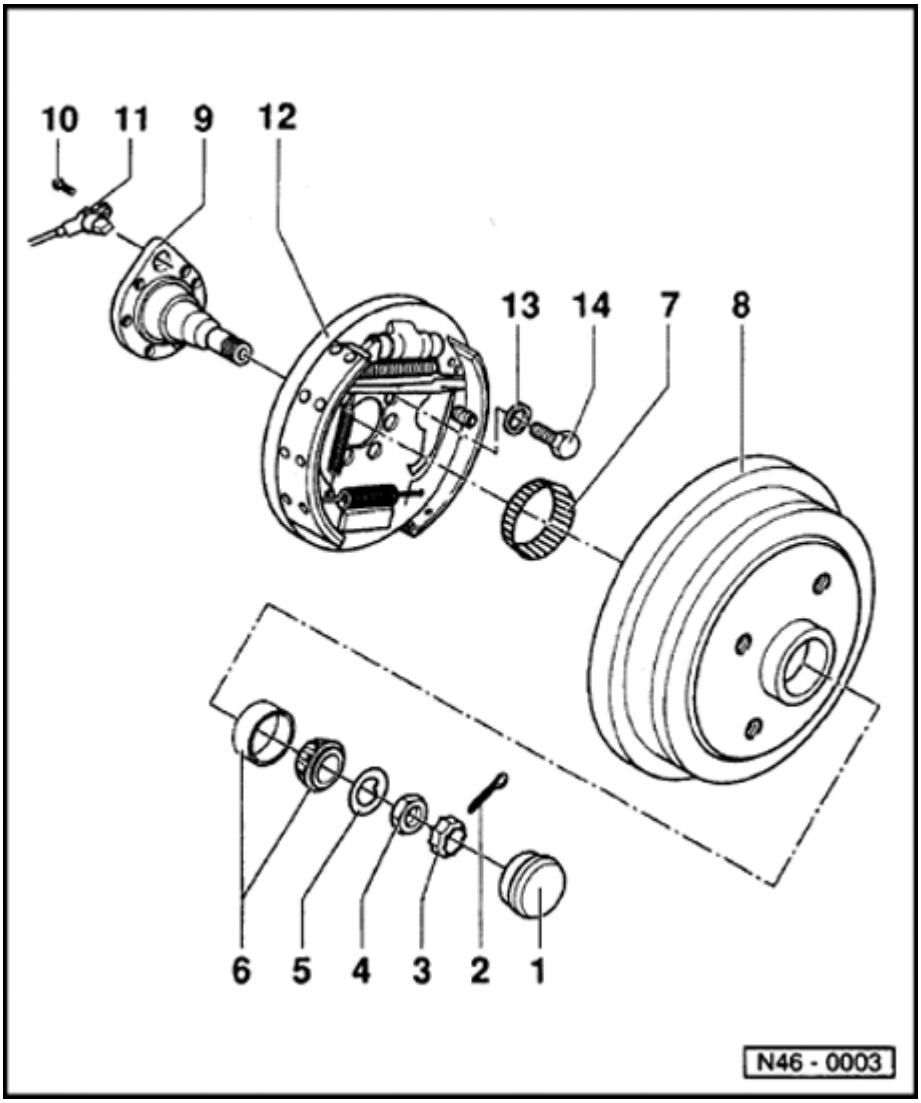

6 - Outer wheel bearing

7 - Wheel speed sensor rotor

- Only on vehicles with ABS

8 - Brake drum

- Vehicles with front wheel drive
- Brake drum diameter: 230 mm
- Wear limit: 231.5 mm
- Clean thoroughly, check for wear, damage, tolerances, damaged wheel bolt threads and condition of braking surface
- Fill hub with multi-purpose grease
- Check for ovality

9 - Stub axle

46-17

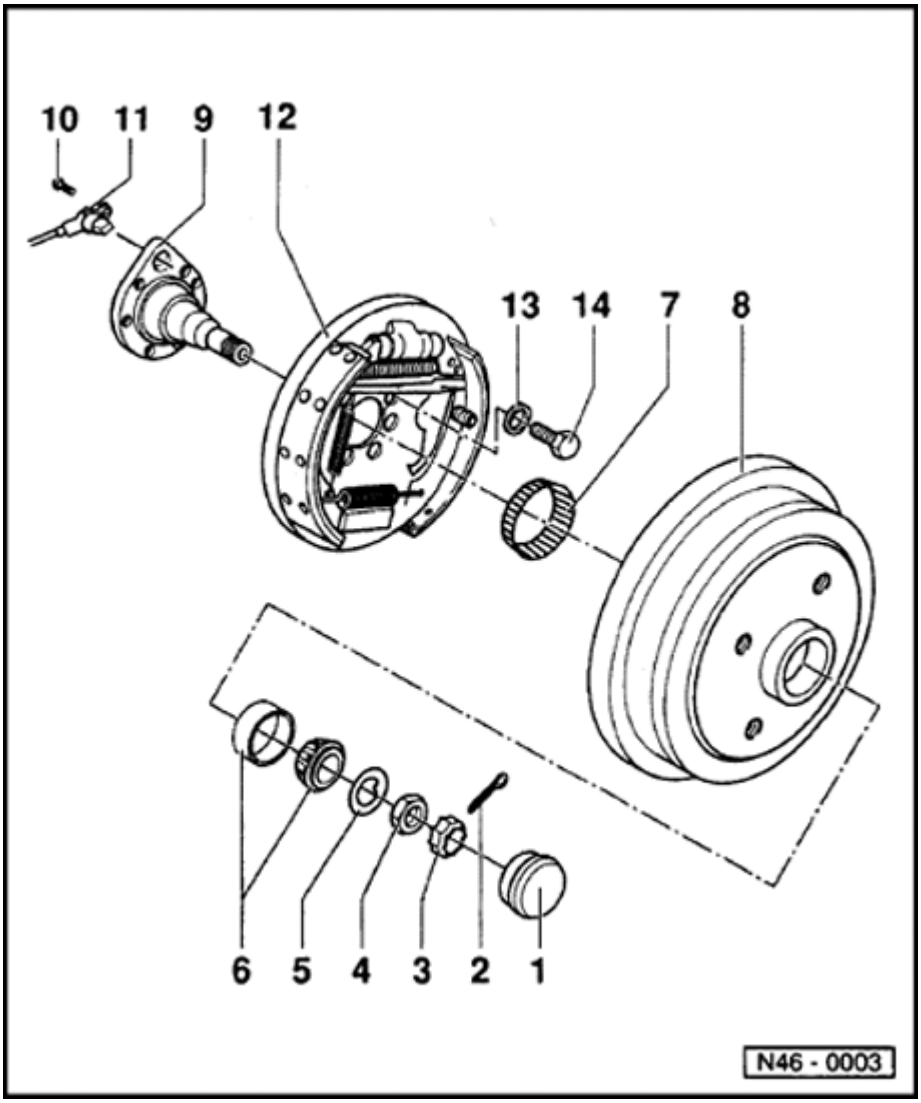

10 - Hex socket head bolt, 10 Nm (7 ft lb)

11 - Wheel speed sensor

- Only on vehicles with ABS
- Insert with lubricating paste, G 000 650

12 - Backing plate with brake shoes

- Release adjustment before removing brake drum ⇒ Page 46-18

13 - Dished washer

- Large contact surface faces back plate

14 - Hex bolt, 60 Nm (44 ft lb)

46-18

Brake shoe adjustment, releasing

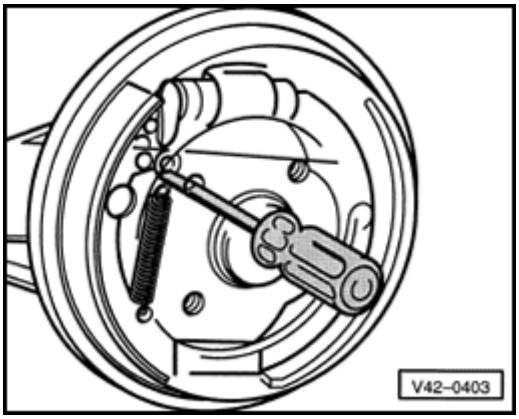

- Insert a screwdriver through hole in brake drum and push wedge upward.

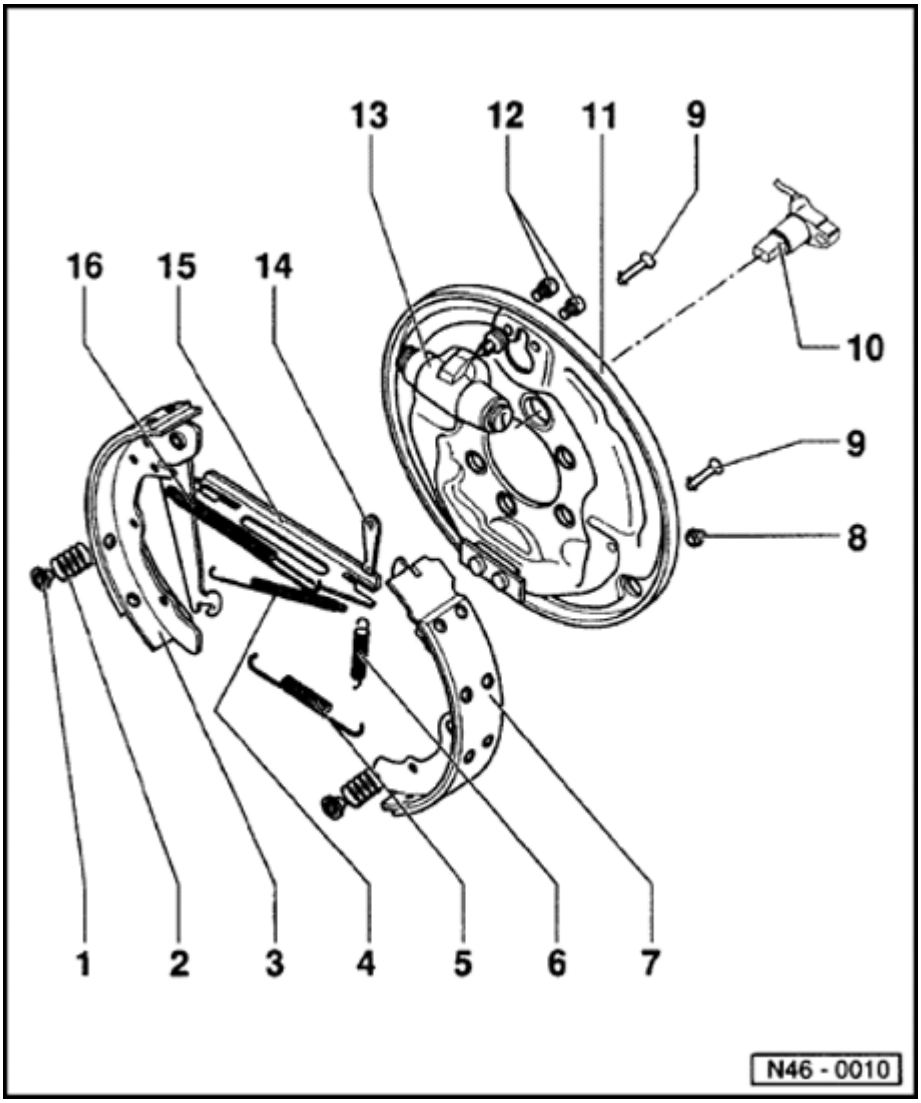

Rear wheel brakes, servicing

Note:

After working on the rear wheel brakes:

- *Release parking brake.*
- *Firmly depress the brake pedal once.*

1 - Spring plate

- To remove, push against the spring and turn through 90°

2 - Spring

3 - Brake shoe with lever for parking brake

- Removing and installing ⇒ Page 46-23
- Adjusting parking brake ⇒ Page 46-26

46-20

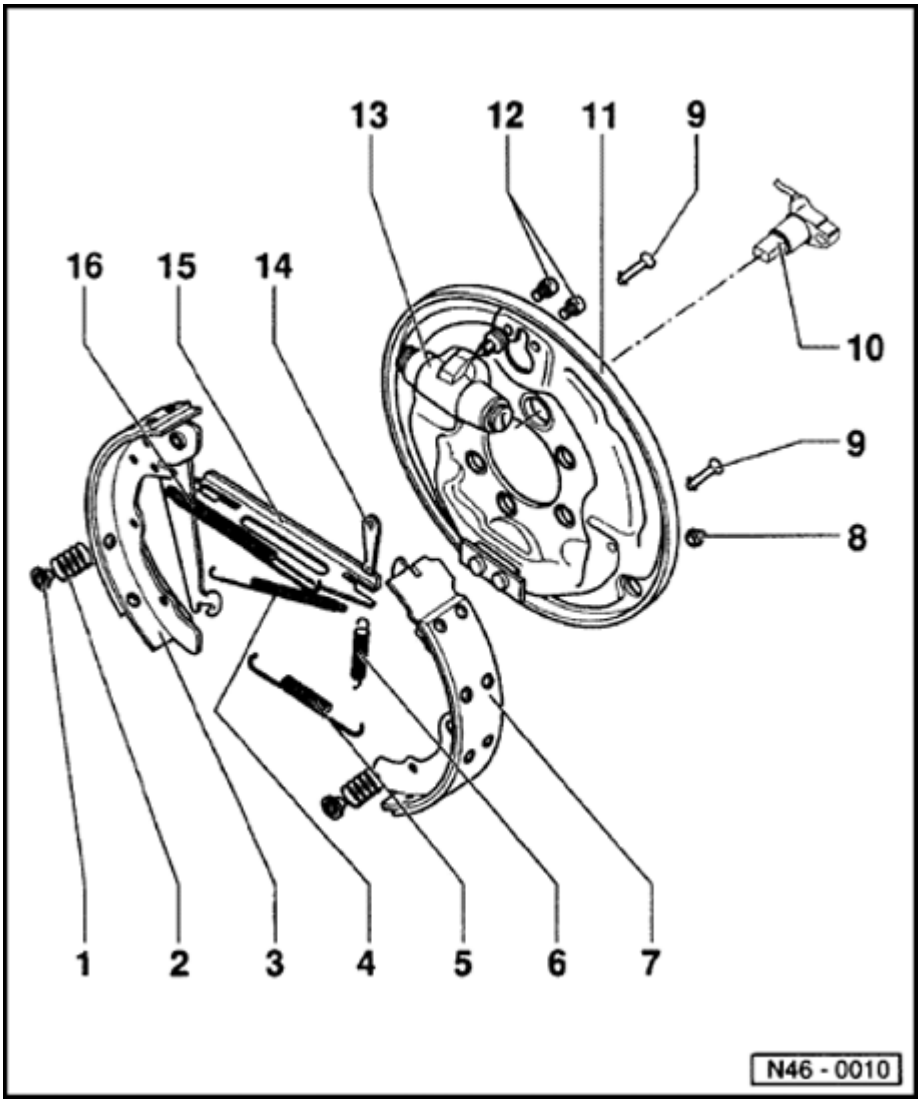

4 - Upper return spring

- Unhook with pliers

5 - Lower return spring

- Lubricate contact points with G 000 650 paste

6 - Wedge spring

7 - Brake shoe

- Removing and installing ⇒ Page 46-23
- Minimum lining thickness 2.5 mm
- Checking thickness

⇒ *Repair Manual, Maintenance*

8 - Cap

- Remove to check brake lining thickness

9 - Pin

10 - Wheel speed sensor

- Only on vehicles with ABS

46-21

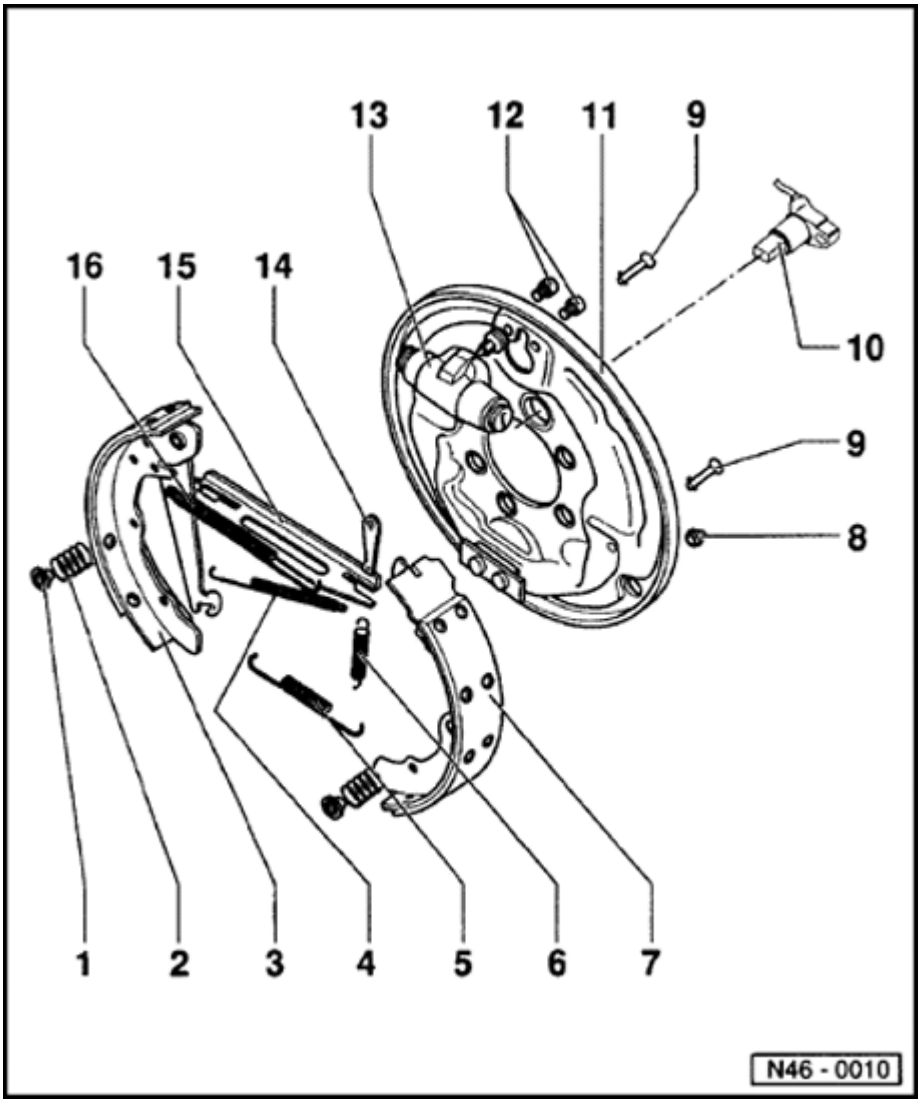

11 - Backing plate

12 - Hex socket head bolt, 10 Nm (7 ft)

13 - Wheel cylinder

- Checking for leaks ⇒ Fig. 1

14 - Wedge

- To remove and install the brake drum, push upwards through a wheel bolt hole ⇒ Page 46-18

15 - Push rod

- Lubricate contact points with G 000 650 paste

16 - Locating spring

- Unhook with pliers

46-22

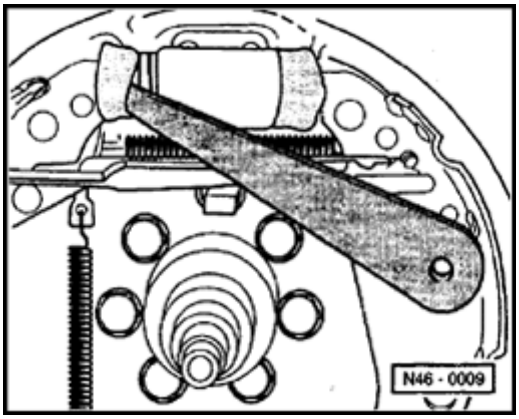

Fig. 1 Wheel cylinder, checking for leaks

- Lift dust boot
- If brake fluid is found in the dust boot then replace wheel cylinder

Note:

Care is to be exercised to ensure the seal is not damaged when lifting the dust boot (only use a blunt instrument, e.g. plastic wedge).

46-23

Brake shoes, removing and installing

Removing

- Remove brake drum.
- Remove spring plate.
- Unhook lower return spring.
- Remove brake shoes.
- Unhook parking brake cable.

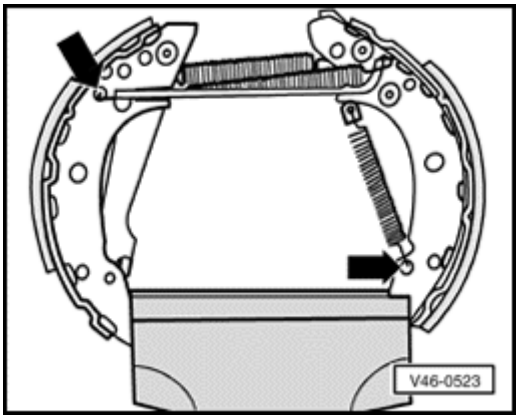

- Clamp brake shoes in vice.
- Remove wedge spring.
- Remove upper return spring.

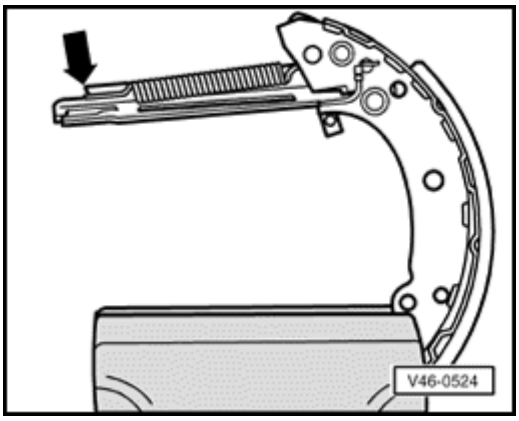

- Unhook locating spring.

46-24

Installing

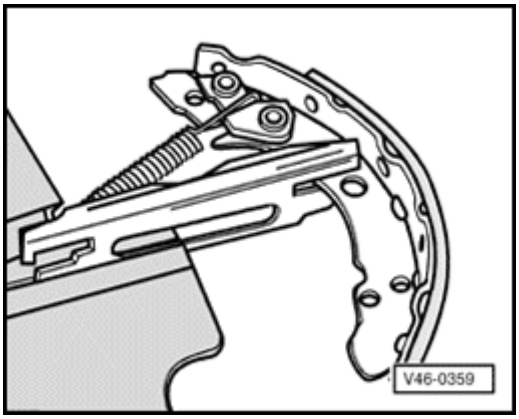

- Connect locating spring and install brake shoes on the push rod.
- Insert wedge.

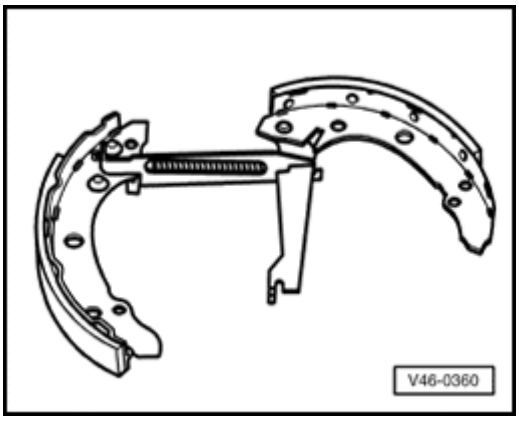

- Insert brake shoe with brake lever in push rod.
- Connect upper return spring.
- Connect parking brake cable to brake lever.
- Place brake shoes on wheel cylinder pistons.
- Connect lower return spring and lift brake shoes onto lower support.

46-25

- Attach wedge spring.
- Install springs and spring plates.
- Install brake drum and adjust wheel bearing play. Adjusting wheel bearing play ⇒ Page 42-20
- Firmly depress brake pedal once, this adjusts the rear brakes.

Parking brake, adjusting (drum brakes)

Note:

Due to the automatic rear wheel brake adjustment there is no requirement to adjust the parking brake. Adjustment is only necessary after replacing parking brake cables, backing plate or brake linings

- Release parking brake.
- Firmly depress brake pedal once.
- Pull parking brake lever up four notches.

Note:

The hand grip and center console must be moved to access the adjusting nuts (arrow) ⇒ *Page 46-39* .

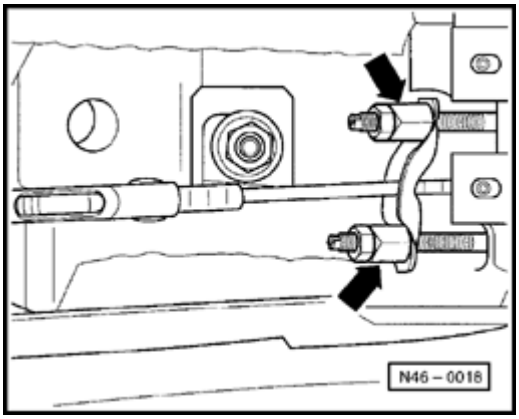

- Tighten adjusting nuts (arrows) until both wheels are difficult to turn by hand.
- Release parking brake and check that both wheels turn freely.

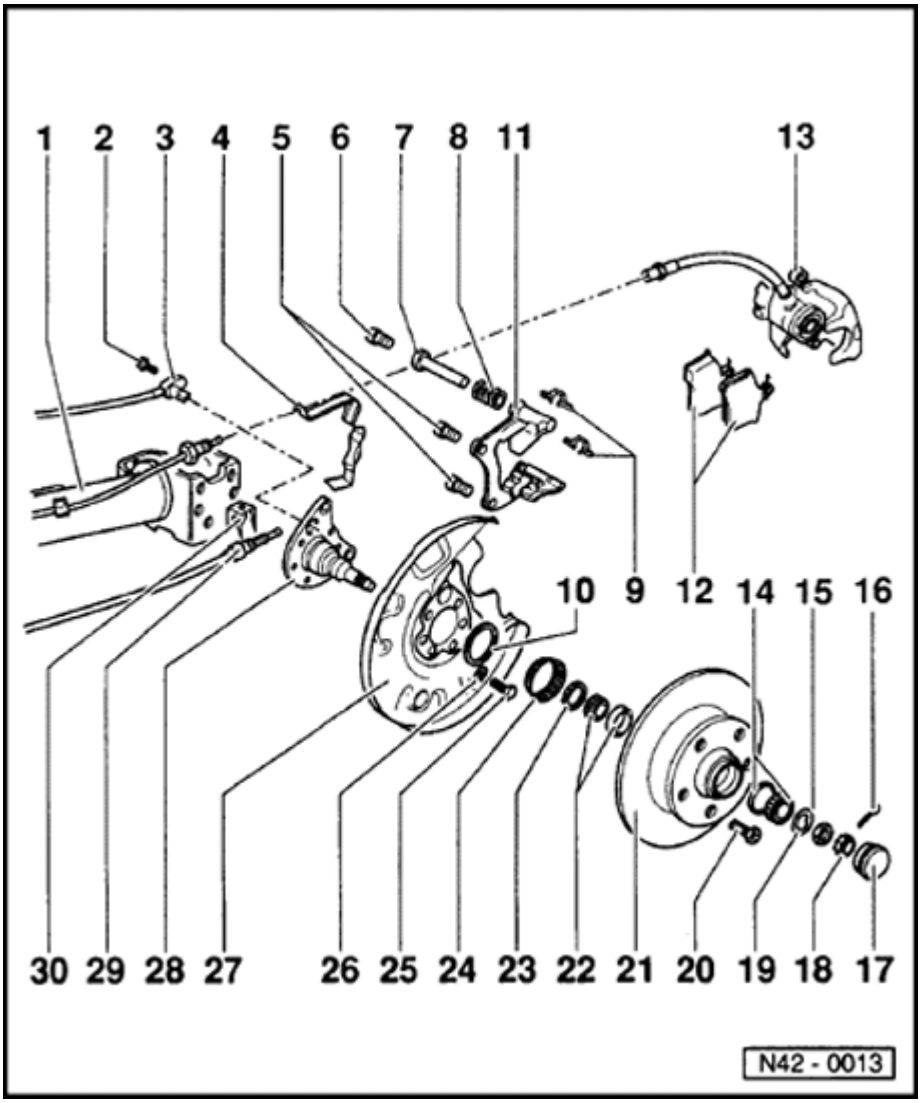

Rear wheel brakes, servicing (disc brakes)

Girling rear wheel disc brakes (front and four wheel drive vehicles)

Note:

Only items 5, 6, 7, 8, 9, 10, 11 and 12 apply for four wheel drive.

1 - Axle beam

2 - Hex socket head bolt, 10 Nm (7 ft lb)

3 - Wheel speed sensor

- Only for vehicles with ABS
- Insert with lubricating paste, G 000 650

46-28

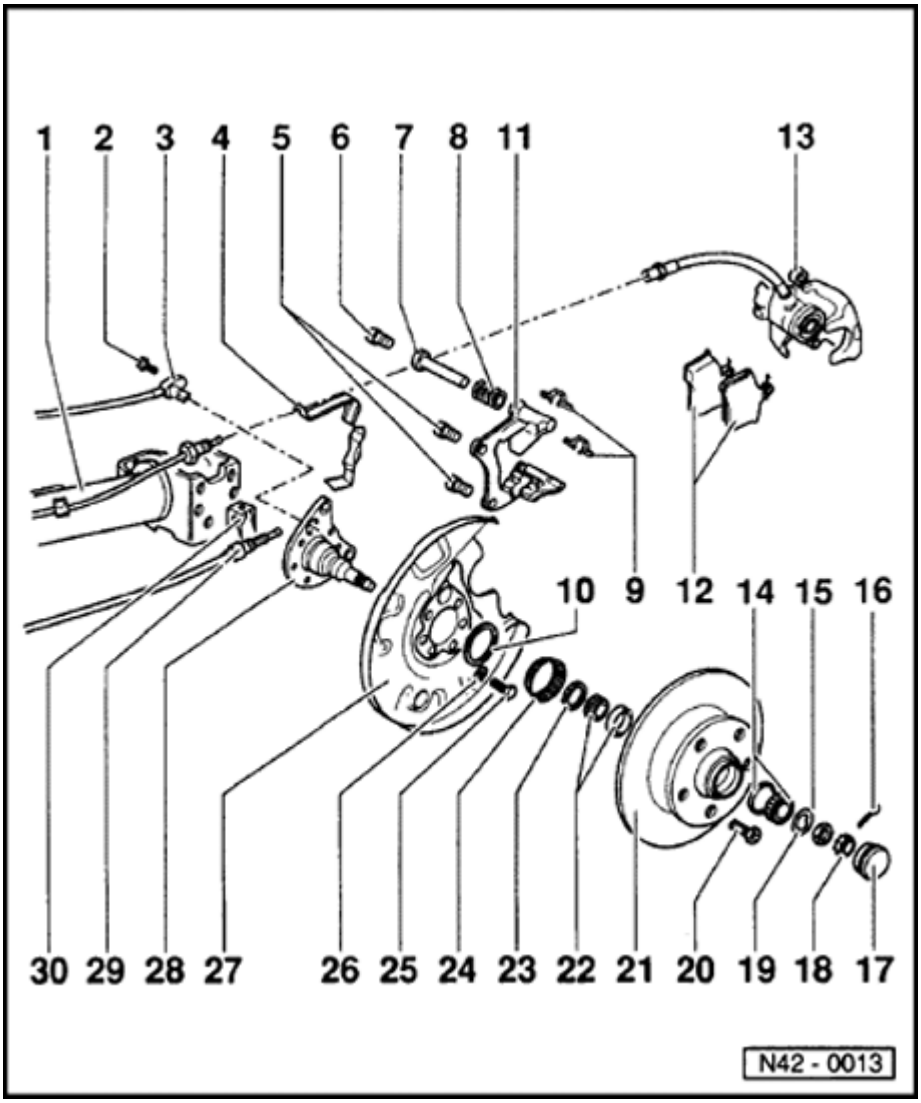

4 - Brake hose bracket

5 - Hex socket head bolt, 65 Nm (48 ft lb)

6 - Self-locking bolt, 35 Nm (26 ft lb)

- Always replace
- When loosening and tightening, counter-hold on guide pin

7 - Guide pin

8 - Protective cap

9 - Pad retaining springs

- Always replace when changing pads

10 - Backing plate ring

- Distance between ring collar and backing plate: 9.5 mm

46-29

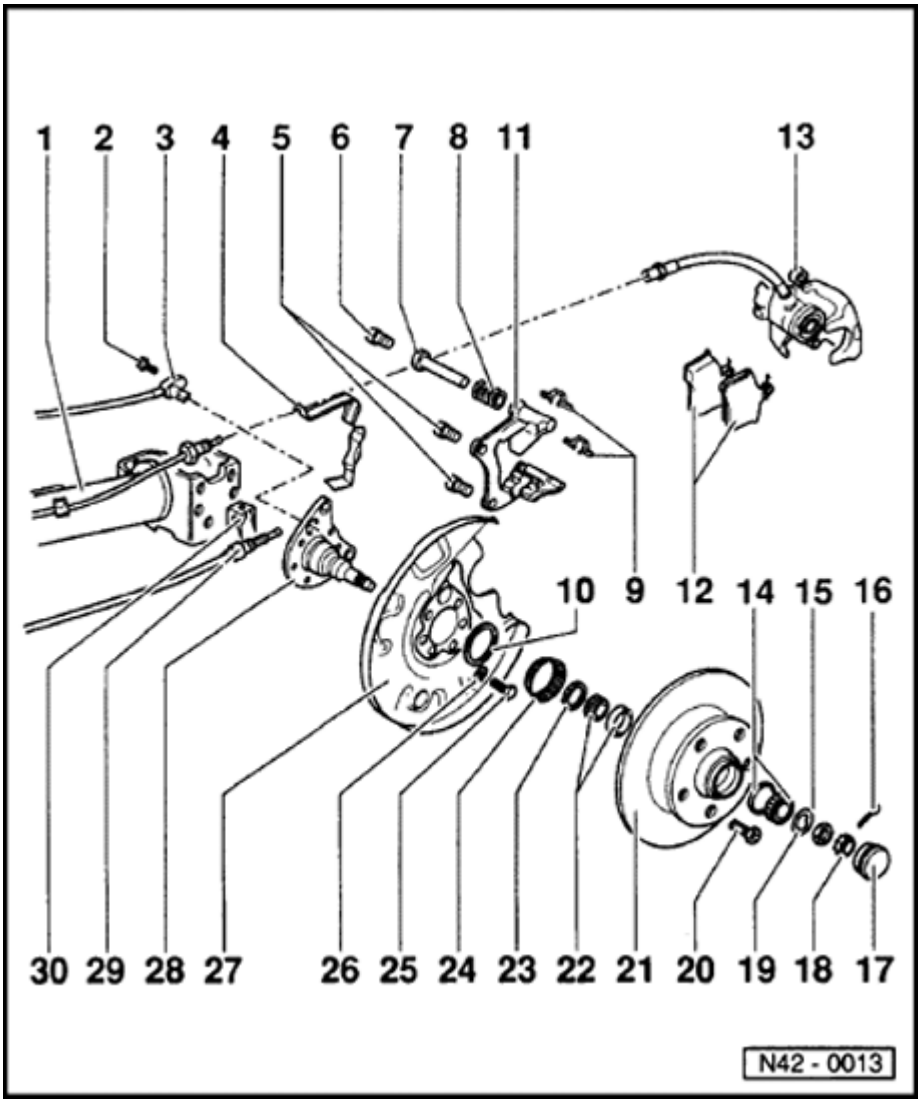

11 - Brake carrier with guide pins and protective cap

- Supplied as replacement part assembled with sufficient grease on guide pins
- If protective caps or guide pins are damaged use repair kit. Use grease packet supplied to lubricate guide pins.

12 - Brake pads

- Thickness: 12 mm
- Checking thickness:

⇒ *Repair Manual, Maintenance*

- Wear limit: 7mm (including backing plate)
- Always replace on both sides
- Removing and installing ⇒ Page 46-33

13 - Brake caliper

- Servicing ⇒ Page 47-15

46-30

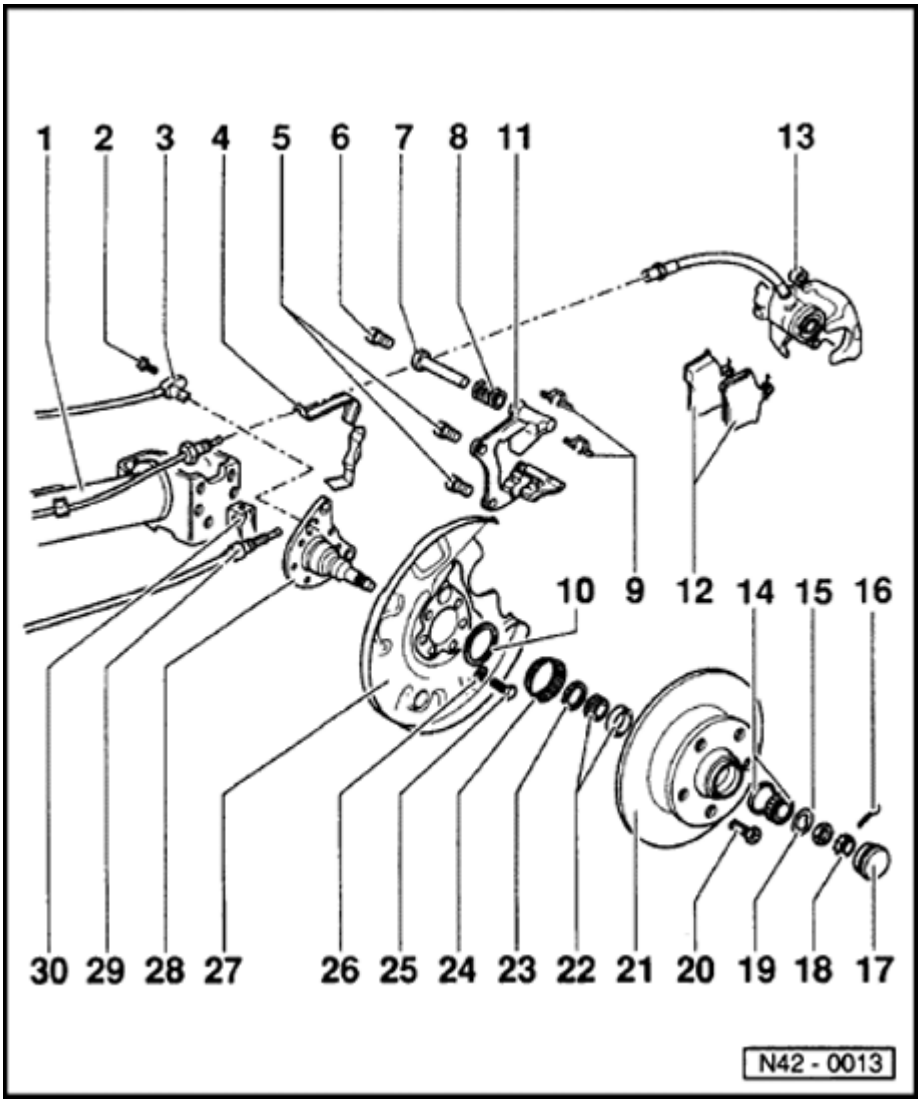

14 - Outer wheel bearing

15 - Hex nut

- Adjusting wheel bearing play
- Using a screwdriver it must be possible to move the thrust washer by finger pressure (without leverage) ⇒ Page 42-20
- Secure with locking ring and new cotter pin

16 - Cotter pin

- Always replace

17 - Grease cap

- Removing and installing ⇒ Page 42-29

18 - Lock ring

19 - Thrust washer

20 - Wheel bolt, 110 Nm (81 ft lb)

46-31

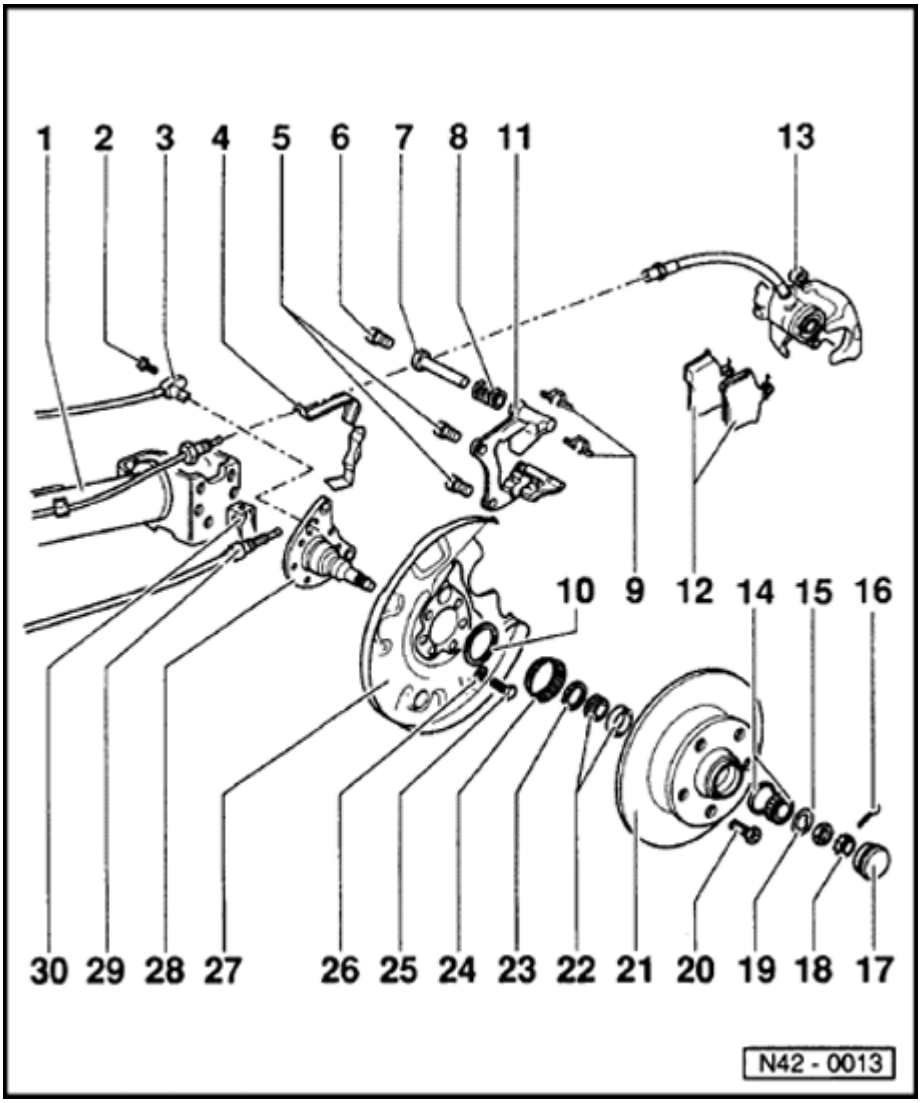

21 - Brake disc

- Brake disc diameter for vehicles with front wheel drive: 226 mm
- Removing and installing ⇒ Page 42-24
- Brake disc diameter for vehicles with four wheel drive: 239 mm
- Removing and installing ⇒ Page 42-59
- Brake disc thickness, for both versions: 10 mm
- Wear limit: 8 mm
- When worn, always replace on both sides
- Assembly sequence for run-in brake discs:
  - Brake caliper
  - Brake pads
  - Brake carrier

22 - Inner wheel bearing

23 - Seal

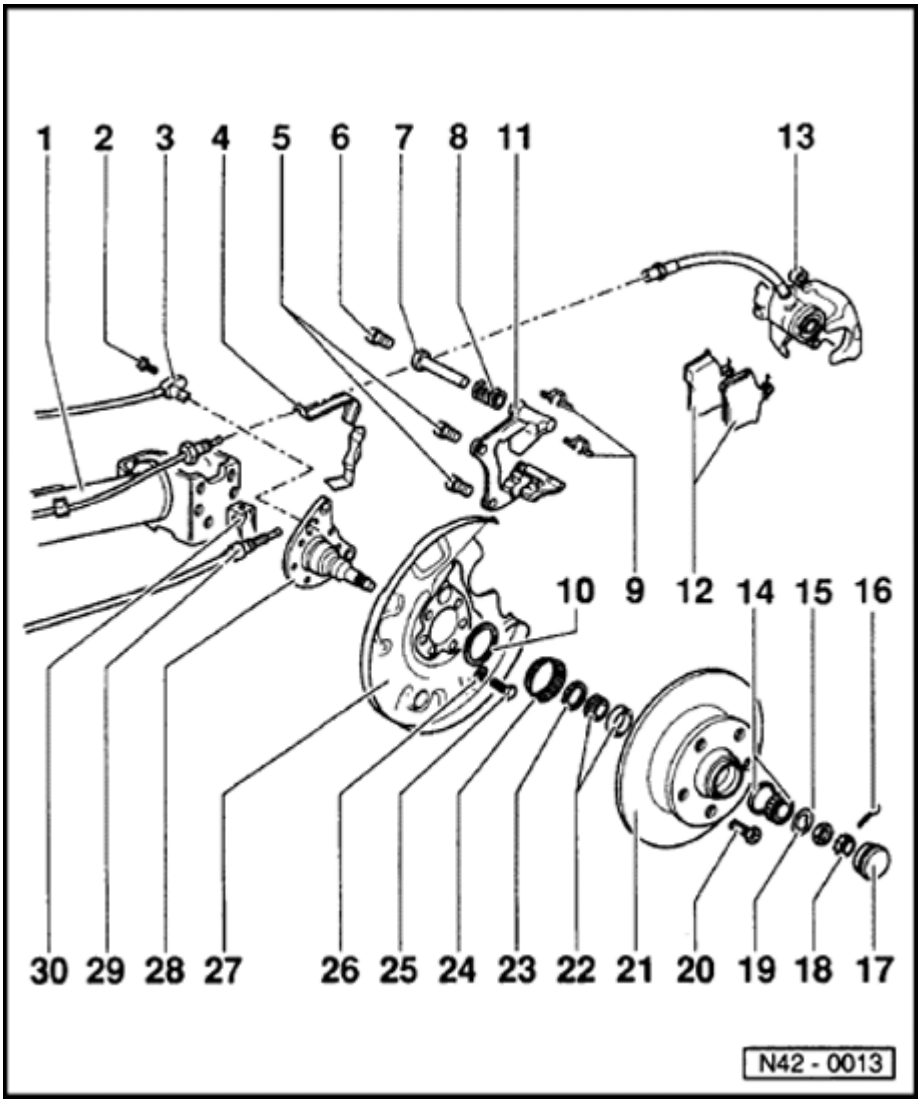

24 - Wheel speed sensor rotor

- Insert drift through wheel bolt holes and drive off
- Drive on with suitable sleeve

25 - Hex bolt, 60 Nm (44 ft lb)

26 - Dished spring washer

- Larger seating surface towards backing plate

27 - Backing plate

28 - Stub axle

29 - Parking brake cable

- Adjusting parking brake ⇒ Page 46-36

30 - Spring clip

46-33

Brake pads, removing and installing

Note:

Mark brake pads when removing if they are to be reused. Re-install in their original position to prevent uneven braking

Removing

- Remove wheels.

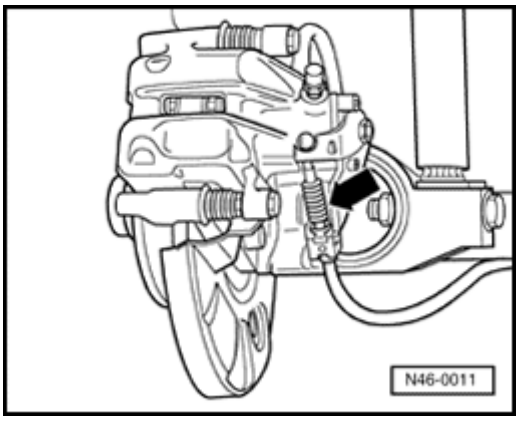

- Remove parking brake cable from brake caliper (arrow).
- Remove securing bolts from brake caliper housing; counter-hold on guide pins.

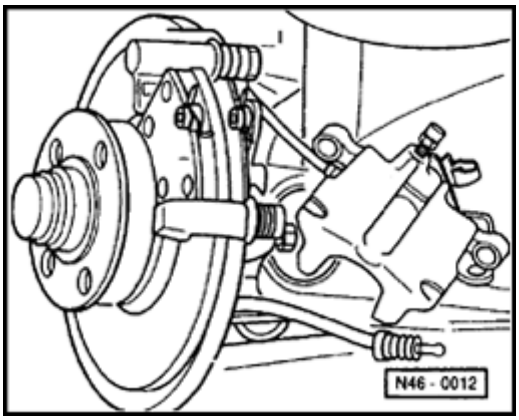

- Remove brake pads.

46-34

Installing

Note:

Before pressing the piston back, remove some brake fluid from the reservoir. Use a bleeder bottle or a plastic bottle which is only used for brake fluid. Brake fluid is poisonous and must not be siphoned by mouth through a hose.

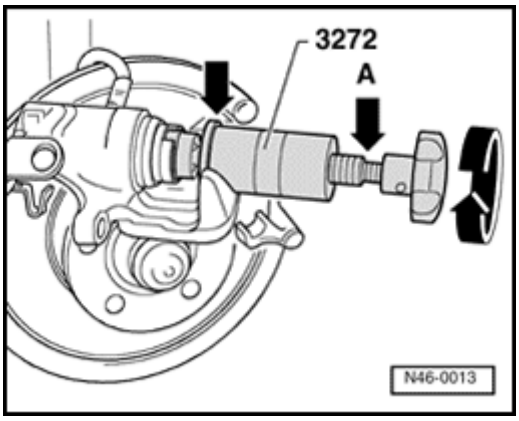

- Thread in piston by turning knurled wheel of special tool 3272 clockwise.
- Install brake pads.

Note:

- *Install special tool 3272 so that the collar (arrow) of the tool is seated against the brake caliper.*
- *If the piston is difficult to move, use a 13 mm open end wrench on the flats (arrow A) provided for this purpose.*
- *If the piston is pushed back with a piston resetting tool or by operating the foot brake, the automatic adjustment in the brake caliper will be destroyed.*

46-35

- Secure brake caliper housing with new self-locking bolts.

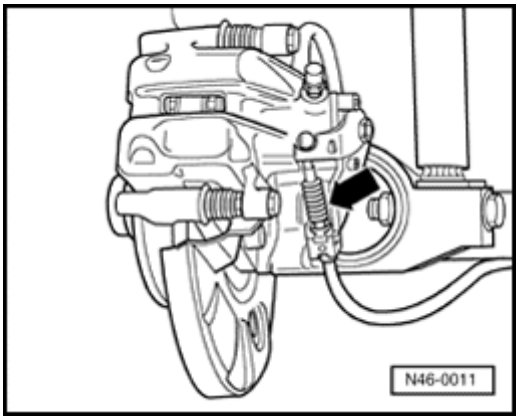

- Attach parking brake cable (arrow) to brake caliper housing.

Note:

- *After each brake pad change firmly depress brake pedal several times with vehicle stationary, so that the brake pads are properly seated in their normal operating position.*
- *After changing brake pads check brake fluid level.*

Parking brake, adjusting (disc brakes)

Note:

- *Due to the self-adjusting rear brakes there is no requirement to adjust the parking brake. Adjustment is only necessary after replacing parking brake cables, brake calipers, brake pads and brake discs.*

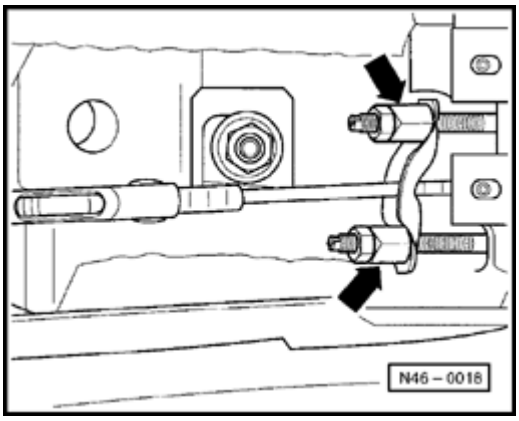

- *Remove hand grip and central console to allow access to adjusting nuts (arrows)* ⇒ *Page 46-39* .

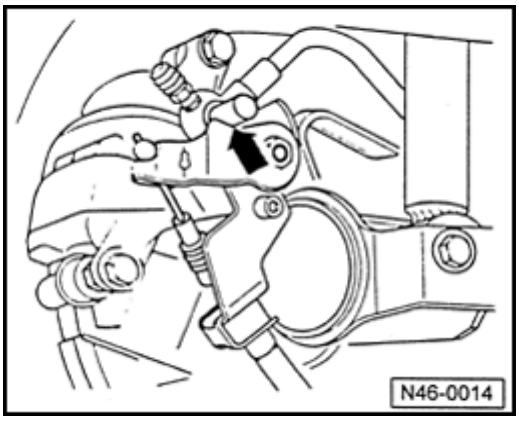

- Parking brake lever in "off" position. Tighten adjusting nut until lever (arrow) lifts off the brake caliper stop.
- A gap of max. 1.5 mm from stop (arrow) is permissible each side but should be set the same on both sides.
- Pull parking brake on and then release again.
- Check that both wheels turn freely.

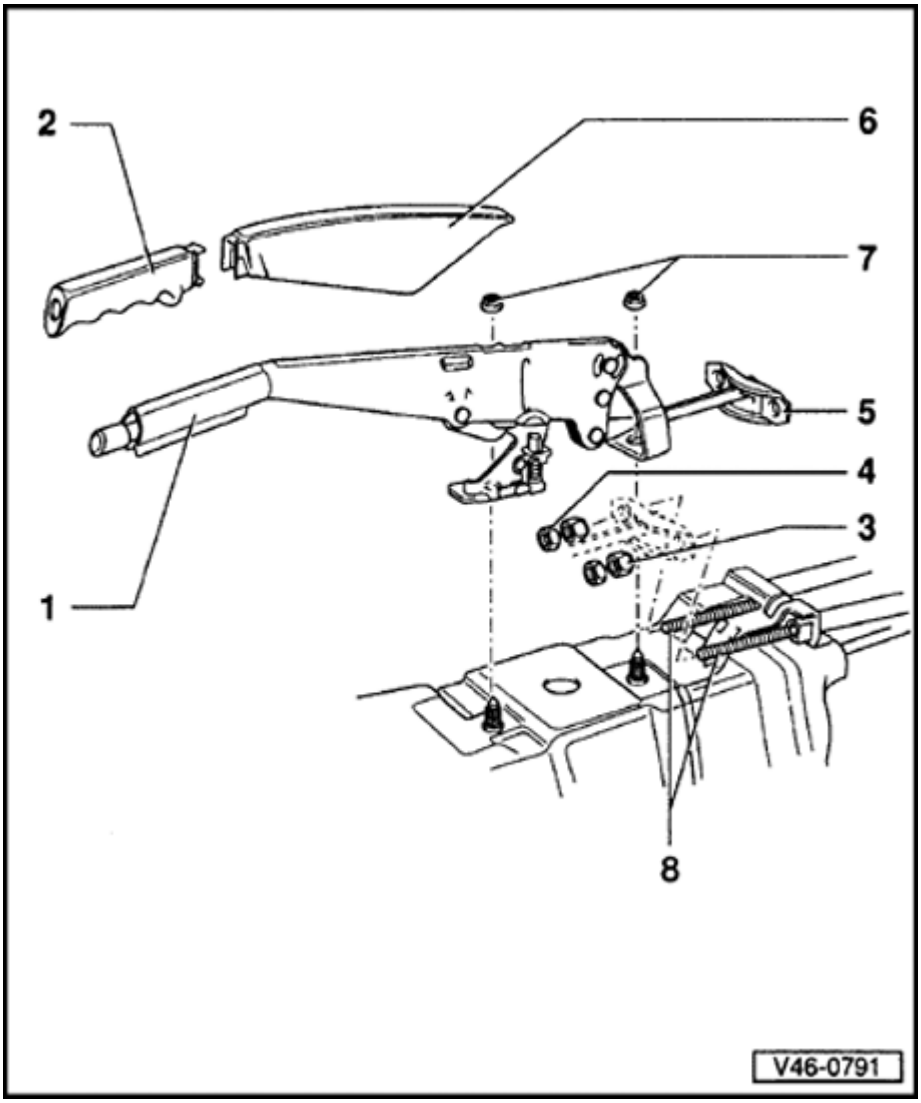

Parking brake lever assembly overview

1 - Parking brake lever

- Different versions for rear drum and disc brakes
- Before removing remove center console

2 - Hand grip

- Pry trim up with a small screwdriver then pull forward to remove ⇒ Fig. 2

3 - Adjusting nut

- Adjusting parking brake:
  - Vehicles with drum brakes ⇒ Page 46-26
  - Vehicles with disc brakes ⇒ Page 46-36

46-38

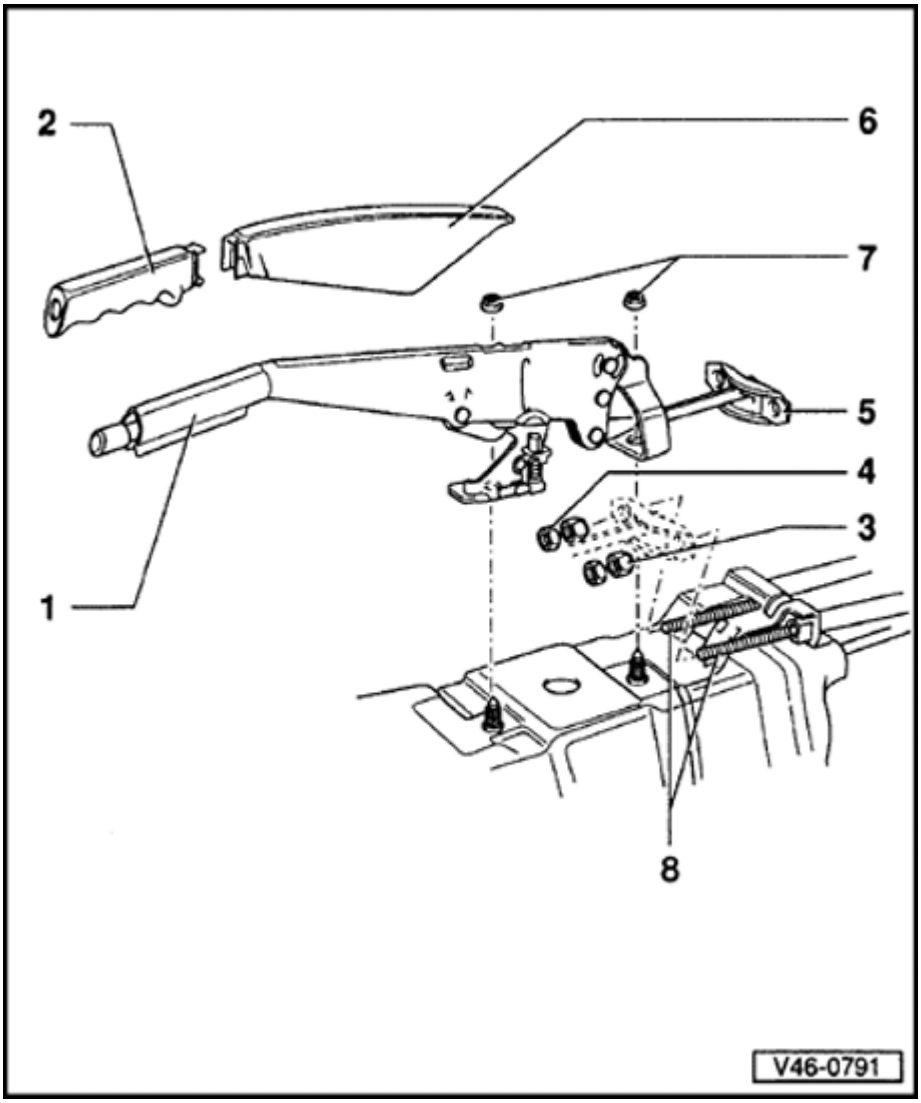

4 - Lock nut

5 - Compensator

6 - Parking brake lever trim

- First pull off parking brake hand grip then pull trim forward ⇒ Fig. 2

7 - Hex nut

8 - Parking brake cable

- Different versions for rear drum and disc brakes
- Allocation see Parts catalog

46-39

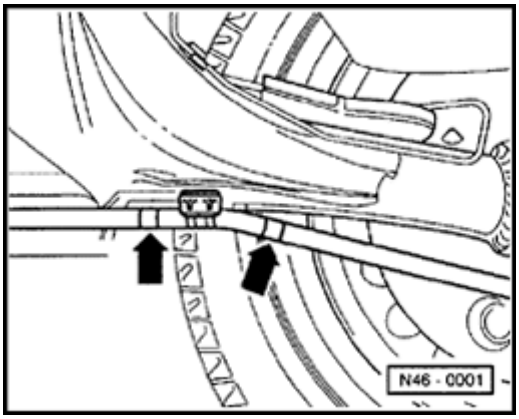

Fig. 1 Parking brake cable installation position

The parking brake cable is secured by clamps to the axle beam in the center of the two colored marks (arrow).

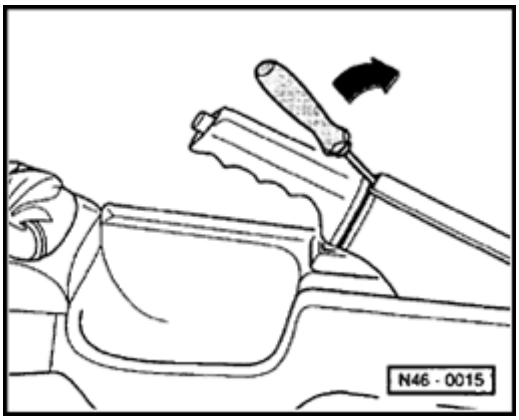

Fig. 2 Hand grip, removing

- Pry up parking brake cable trim with a screwdriver and pull grip and trim off forward.

46-40

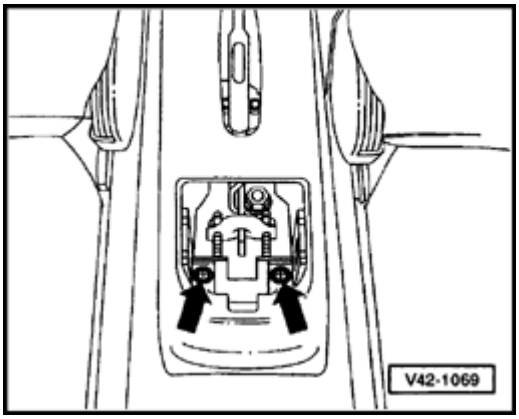

Fig. 3 Center console, removing

- Remove rear ashtray (center console).
- Remove console rear securing screws (arrows).

46-41

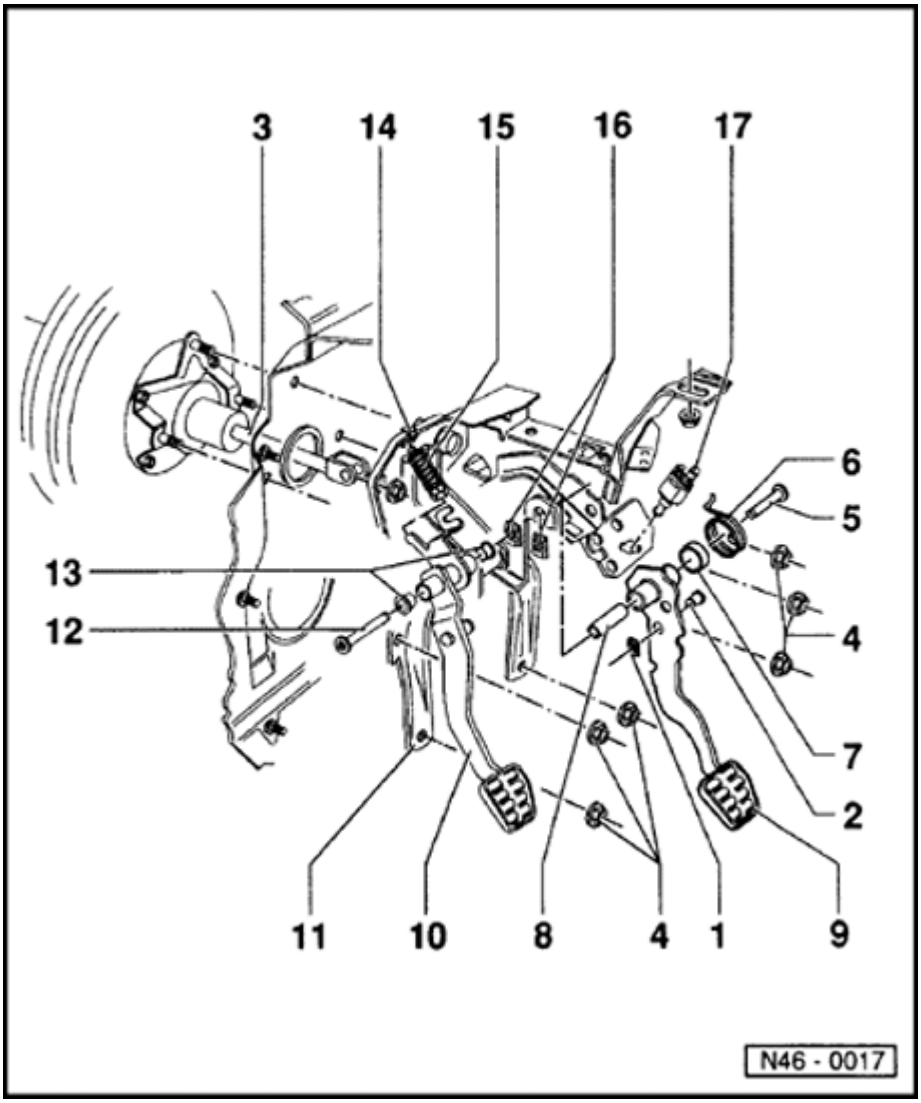

Brake pedal/brake servo, removing and installing

CAUTION!

The brake pedal travel must not be restricted by additional floor coverings.

Note:

Grease all mountings before installing with G 000 602 grease.

1 - Securing clip

- Ensure securely seated

2 - Pin

3 - Brake servo push rod clevis

4 - Self-locking hex nut, 20 Nm (15 ft lb)

5 - Brake pedal pivot pin

46-42

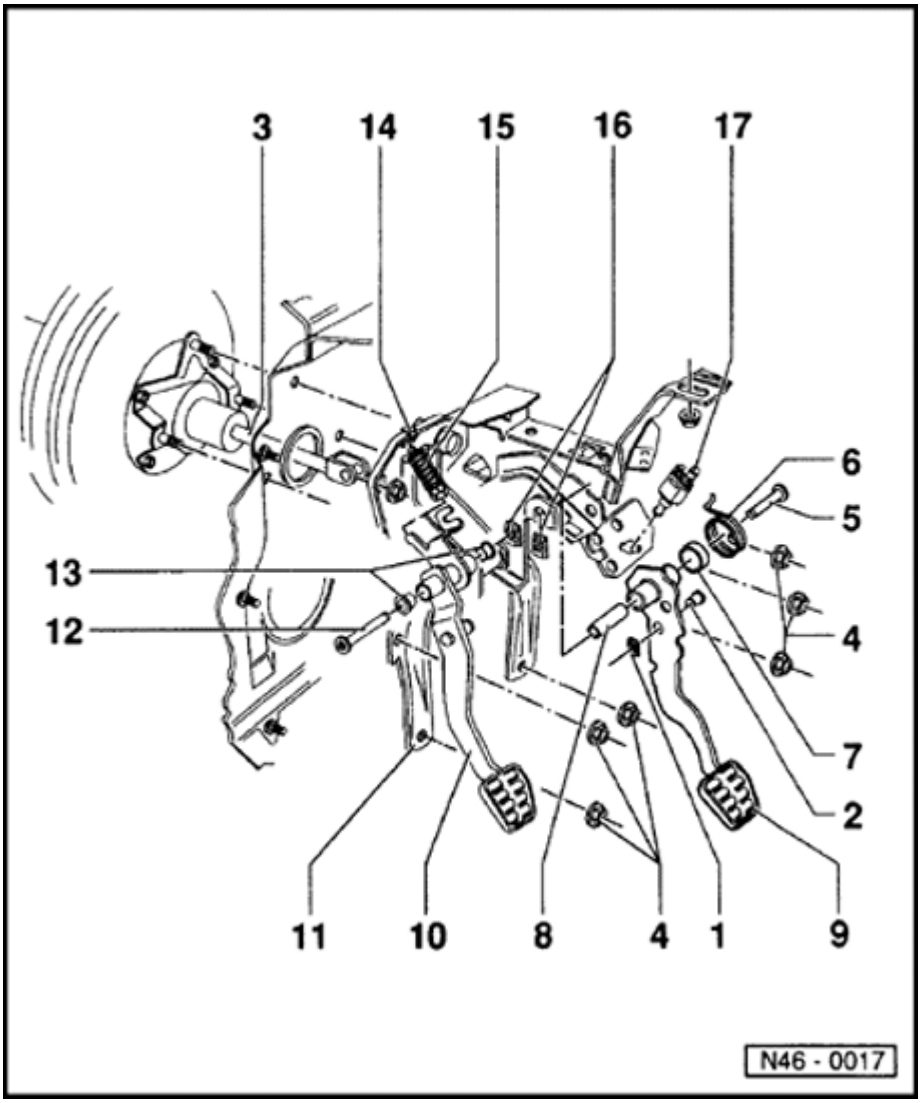

6 - Brake pedal return spring

7 - Return spring mounting tube

8 - Brake pedal mounting bushing

9 - Brake pedal

10 - Clutch pedal

- Removing and installing

⇒ *Repair Manual, 5 Spd. Manual Transmission 02A, Repair Group 30*

11 - Pedal cluster mounting bracket

12 - Clutch pedal pivot pin

13 - Clutch pedal mounting bushing

14 - Over-center spring mounting

15 - Over-center spring

- Before removing, remove clutch pedal

⇒ *Repair Manual, 5 Spd. Manual Transmission 02A, Repair Group 30*

46-43

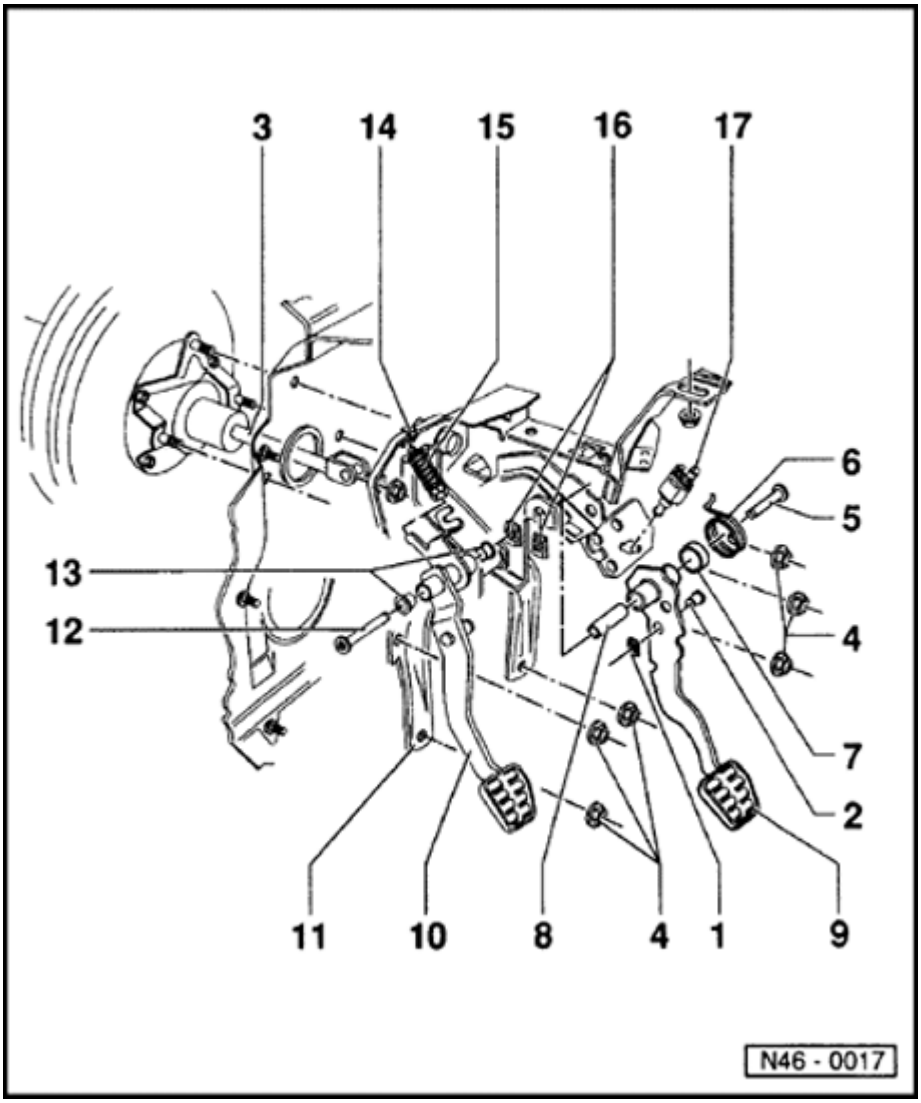

16 - Securing clip

- Ensure seated securely

17 - Brake Light Switch

- Adjusting ⇒ Page 46-45

46-44

Brake pedal, removing and installing

Note:

- *Grease all mounting and contact surfaces with MoS_2 grease.*
- *To remove brake servo disconnect brake pedal at clevis only.*

Removing

- Before removing brake pedal remove trim
- Remove brake pedal clevis pin connection securing clip.
- Remove pin.
- Remove brake pedal pivot pin securing clip.
- Remove pivot pin.
- Remove mounting sleeve, return spring mounting tube with brake pedal.

Installing

- Install in reverse order.

46-45

Brake Light Switch, adjusting

Note:

The Brake Light Switch must be removed for adjusting.

- Remove trim under instrument panel.
- Disconnect harness connector for Brake Light Switch.
- Remove Brake Light Switch by turning to right through 90°.
- Pull Brake Light Switch plunger fully out.
- Depress brake pedal as far as possible by hand, guide Brake Light Switch through the locating hole and secure by turning through 90° to left.
- Pull brake pedal back up by hand to stop (Brake Light Switch is pushed back by one notch).
- Connect harness connector for Brake Light Switch
- Check function of Brake Light Switch.
- Install instrument panel trim.

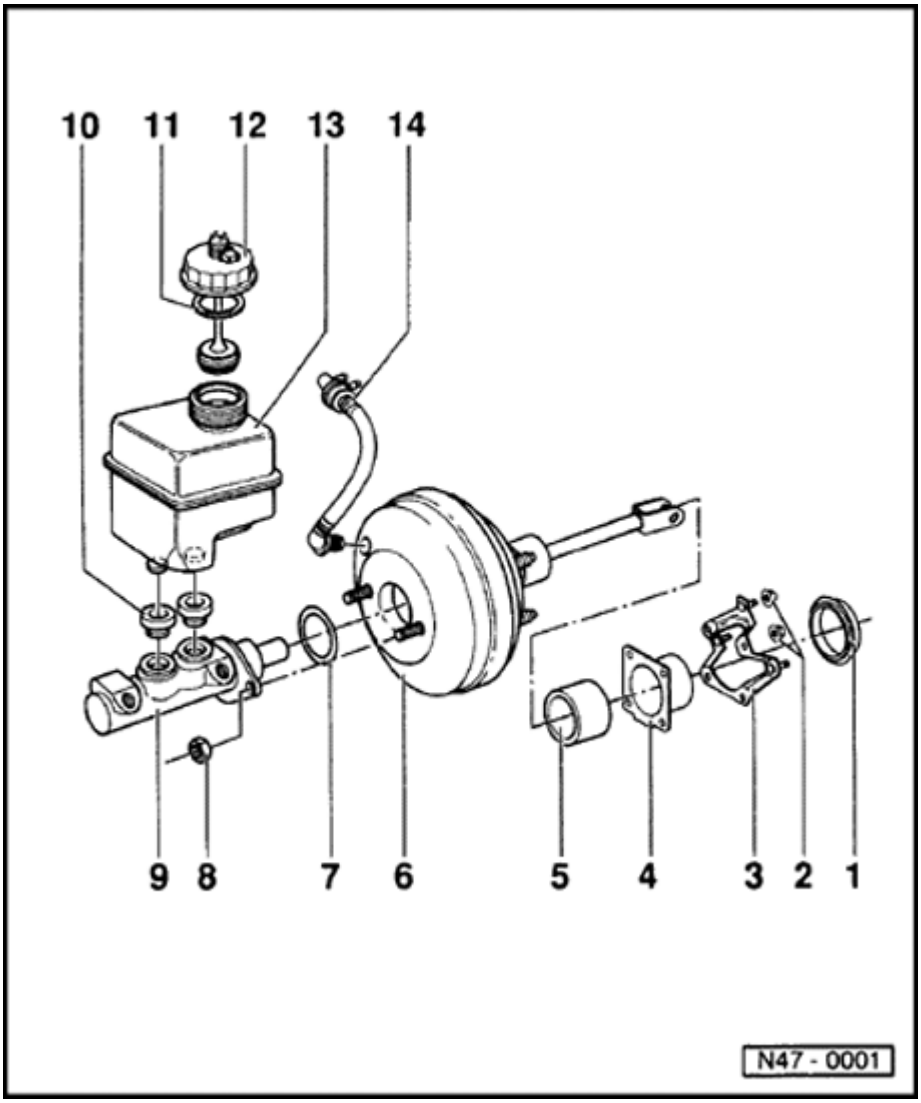

Assembly overview: brake master cylinder/brake servo

Note:

Brake master cylinders and brake servos from different manufacturers are installed. Complete master cylinders and brake servos can be replaced independently of each other.

1 - Seal

- For brake servo

2 - Self-locking hex nut, 20 Nm (15 ft lb)

3 - Mounting bracket

4 - Mounting bracket

- For brake servo

5 - Seal

47-2

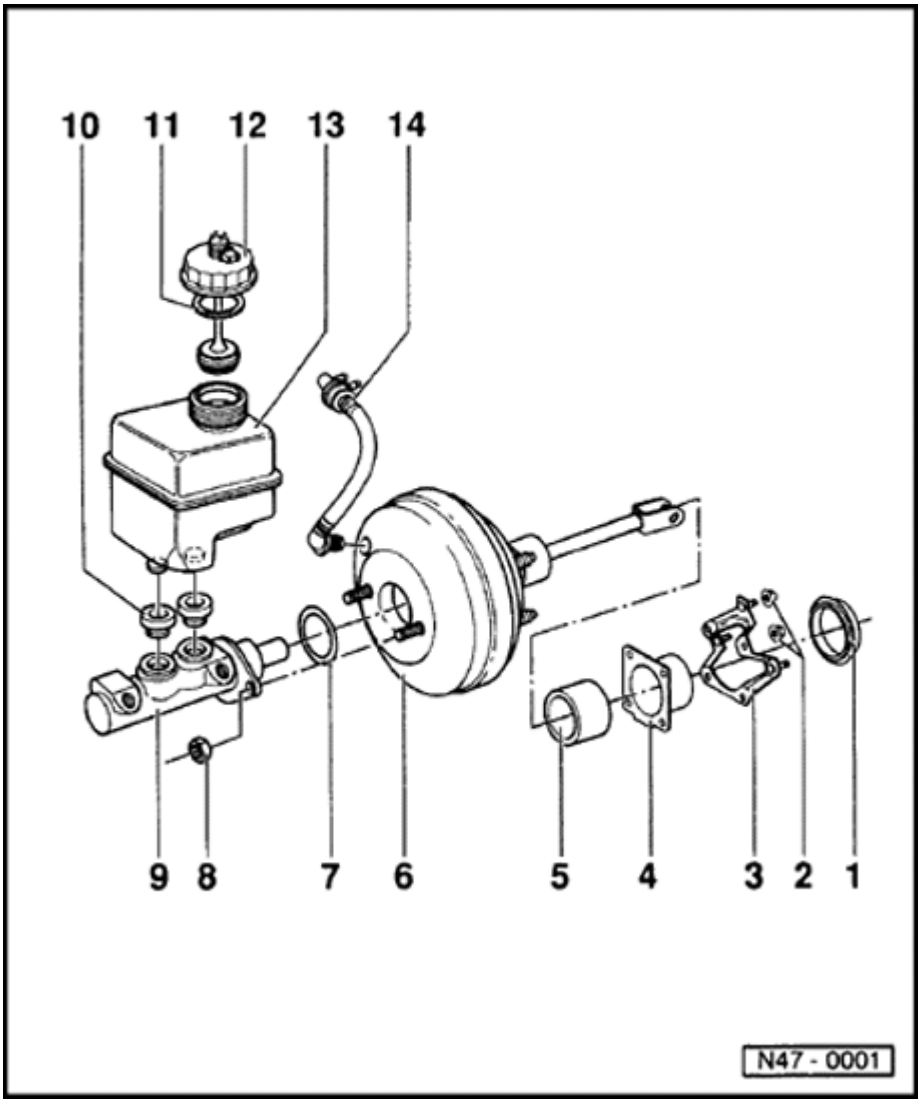

6 - Brake servo

- On gas engines the vacuum required is taken from the intake manifold.
- On Diesel engines an exhauster is installed to create the required vacuum.
- Functional check
  - With engine switched off, depress brake pedal firmly several times (to exhaust the vacuum in the unit).
  - Now depress brake pedal with average foot pressure, hold and start engine. If the servo unit is working properly, the pedal will be felt to give slightly under foot (servo assistance becomes effective).
- If faulty replace complete.
- Check valve (item 14) is in vacuum hose
- Functional check
  - It must be possible to blow through in direction of arrow.
  - Blowing against the arrow the valve must seat.

47-3

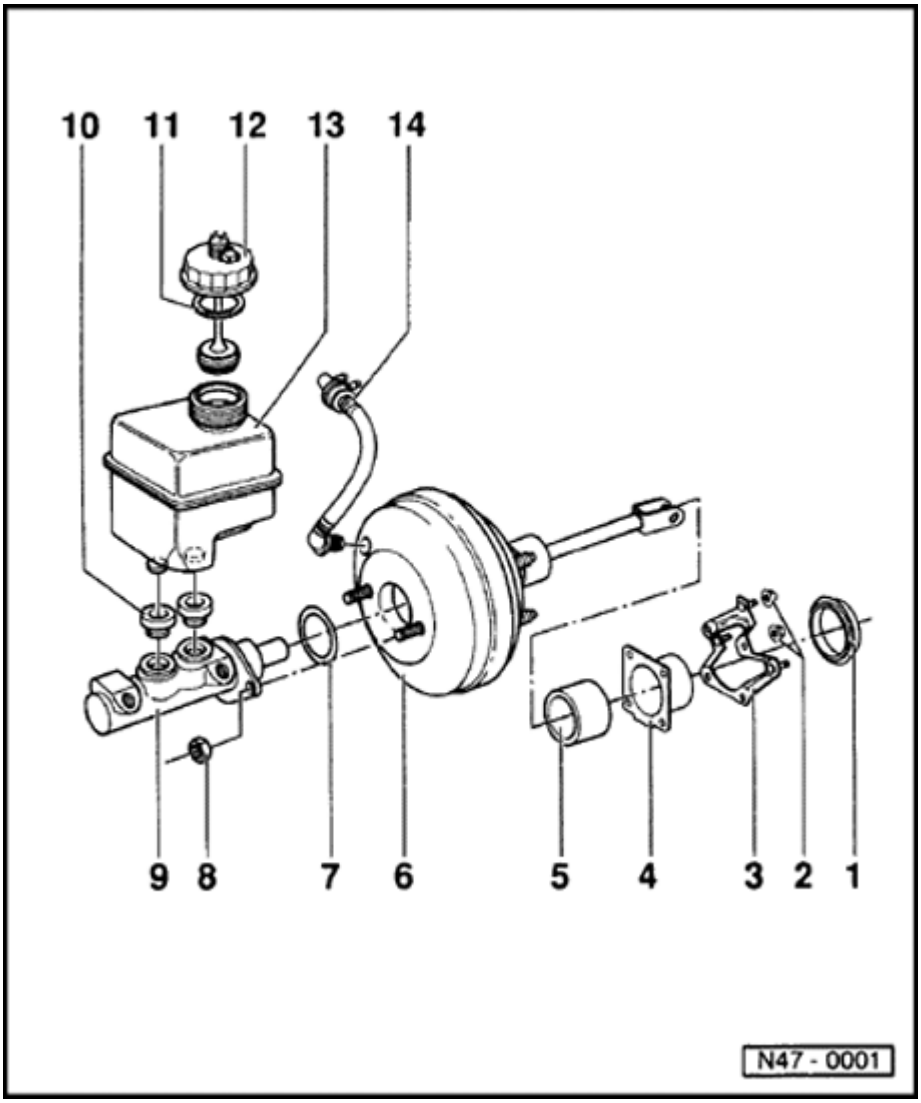

7 - Sealing ring

- Always replace

8 - Self-locking hex nut, 20 Nm (15 ft lb)

9 - Brake master cylinder

- Cannot be repaired. If faulty, replace complete.

10 - Sealing plug

- Moisten with brake fluid and press into reservoir

11 - Seal

47-4

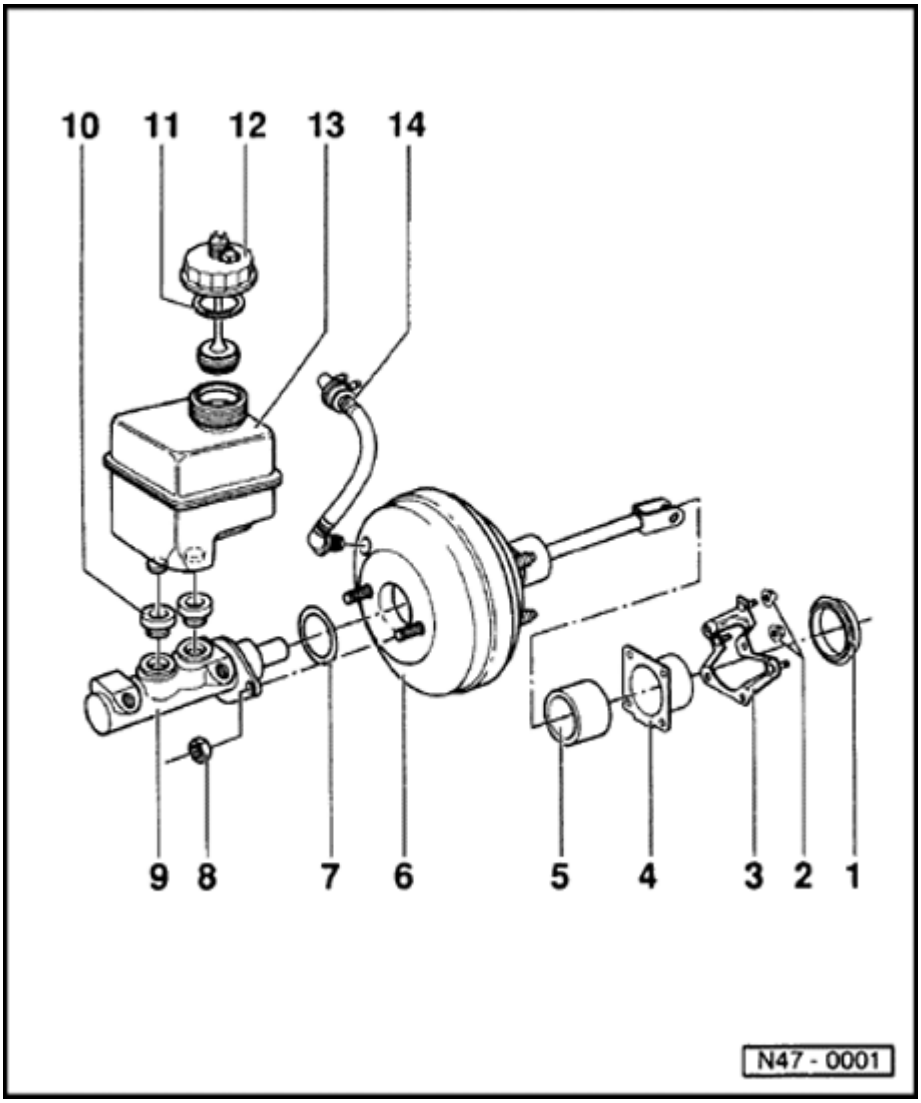

12 - Cap

13 - Brake fluid reservoir

14 - Non-return valve

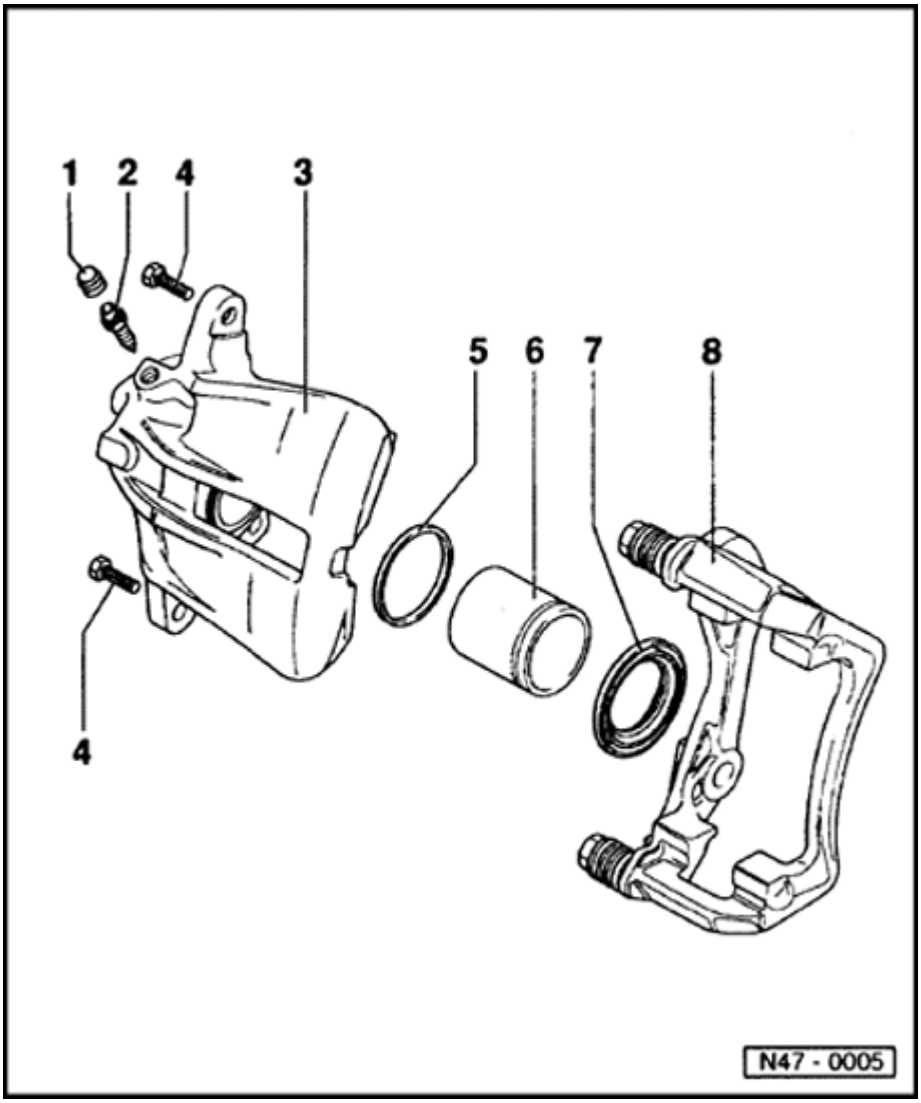

Girling front brake caliper, servicing

Note:

- *When repairing install all parts supplied in repair kit.*
- *Apply thin coat of brake cylinder paste to brake cylinders, pistons and sea/s.*

1 - Protective seal

2 - Bleed valve

- Apply thin coat of brake cylinder paste to threads before screwing in

3 - Brake caliper housing

4 - Self-locking hex bolt, 35 Nm (26 ft lb)

- Always replace
- When loosening and tightening counter-hold on guide pin

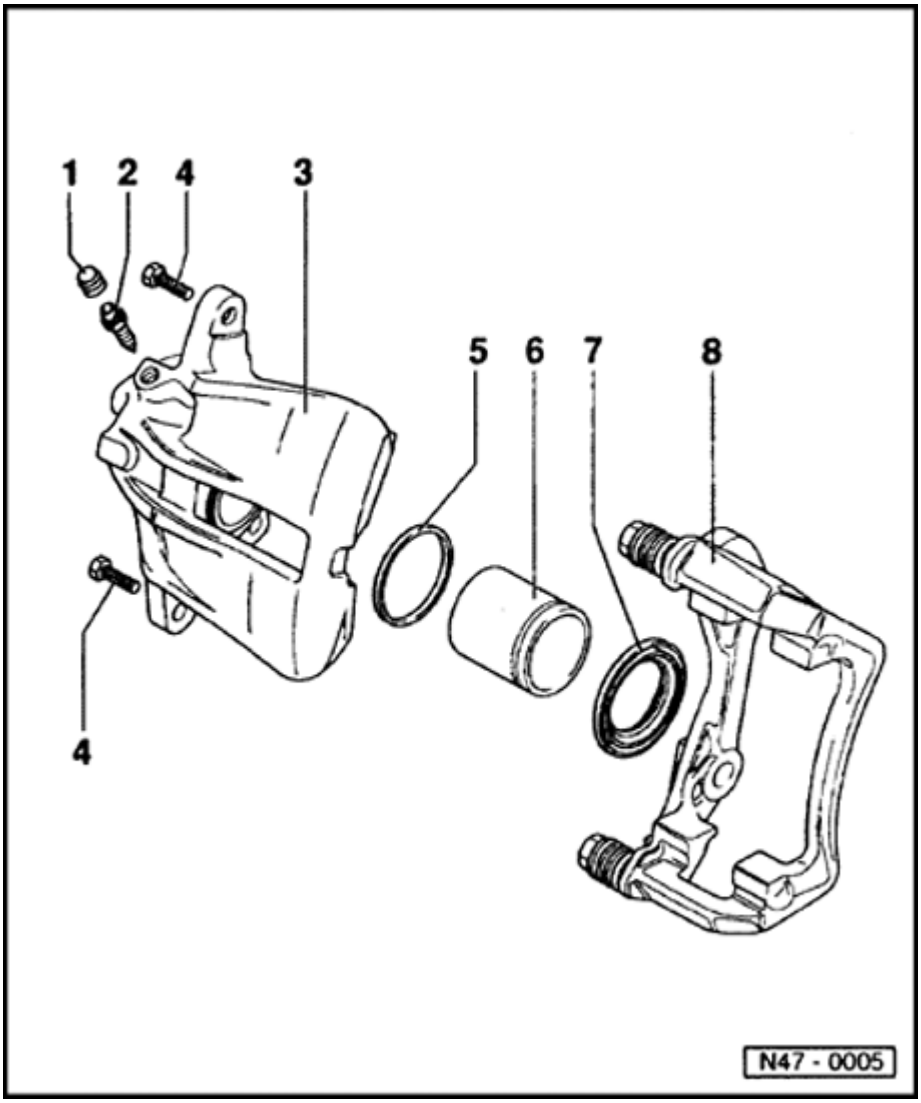

5 - Seal

- Remove using a screwdriver ⇒ Page 47-7

6 - Piston

- Removing and installing ⇒ Page 47-7
- Apply thin coat of brake cylinder paste before inserting

7 - Protective seal

- Do not damage when inserting piston

8 - Brake carrier with guide pins and protective caps

- Brake carrier with guide pins and protective cap
- Supplied as replacement part assembled with sufficient grease on guide pins
- If protective caps or guide pins are damaged use repair kit. Use grease packet supplied to lubricate guide pins

47-7

Front brake caliper pistons, removing and installing

Removing

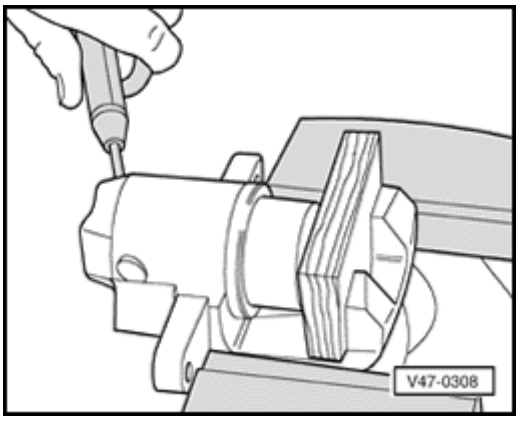

- Force piston out of brake caliper housing using compressed air.

Note:

Place a piece of wood in the recess to prevent damaging the piston.

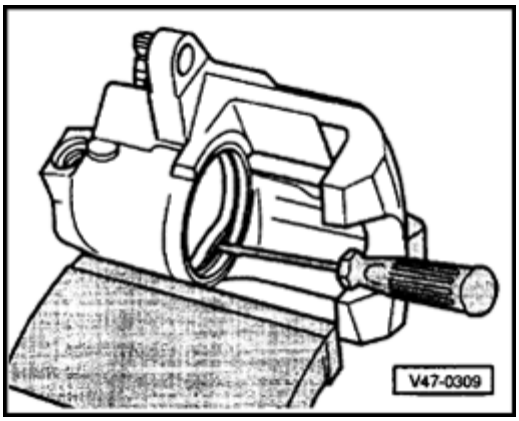

- Remove seal with a screwdriver.

Note:

When removing ensure that the surface of the cylinder is not damaged.

47-8

Installing

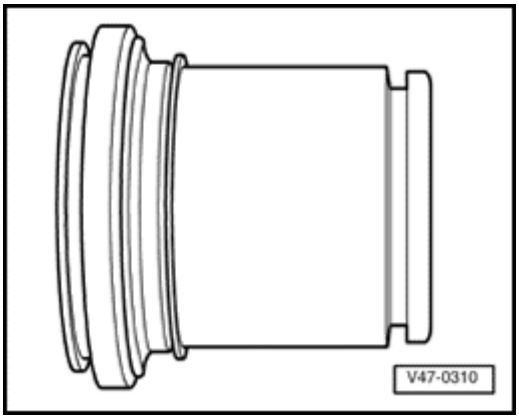

- Place protective seal with the outer sealing lip on the piston.

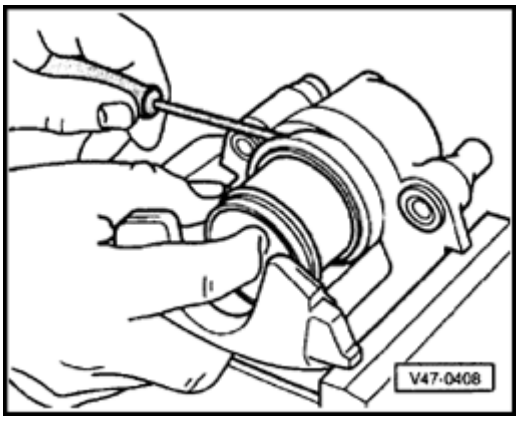

- Using a screwdriver, insert the inner sealing lip into the cylinder groove.

Note:

Hold piston in front of caliper housing.

47-9

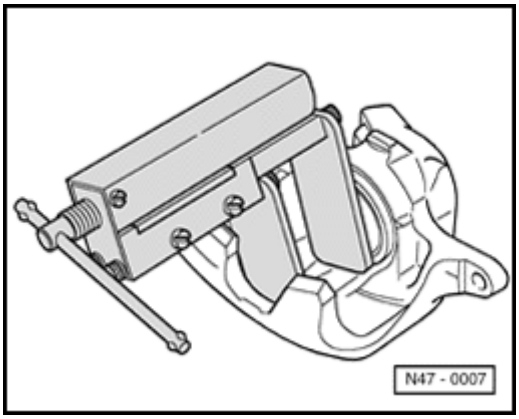

- Press piston into the brake caliper housing using piston resetting tool.

Note:

The protective seal outer sealing lip will then locate in the piston groove.

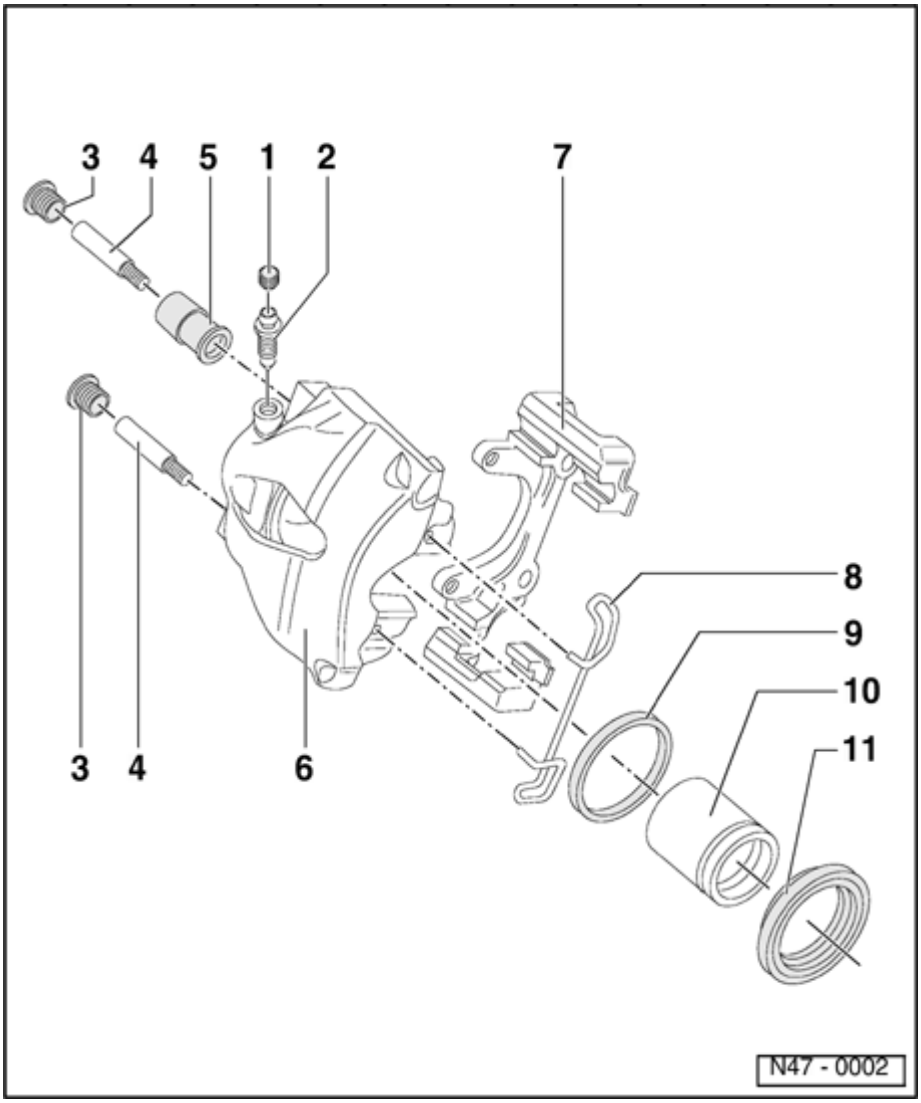

Front brake caliper, servicing (Teves/Ate)

Note:

- *When repairing install all parts supplied in repair kit.*
- *Apply thin coat of brake cylinder paste to brake cylinders, pistons and seals.*

1 - Protective seal

- Push onto bleed valve

2 - Bleed valve

- Apply thin coat of brake cylinder paste to threads before threading in

3 - Cap

- Install in mounting bushing

4 - Guide pin, 25 Nm (18 ft lb)

5 - Mounting bushing

- Insert into brake caliper housing

47-11

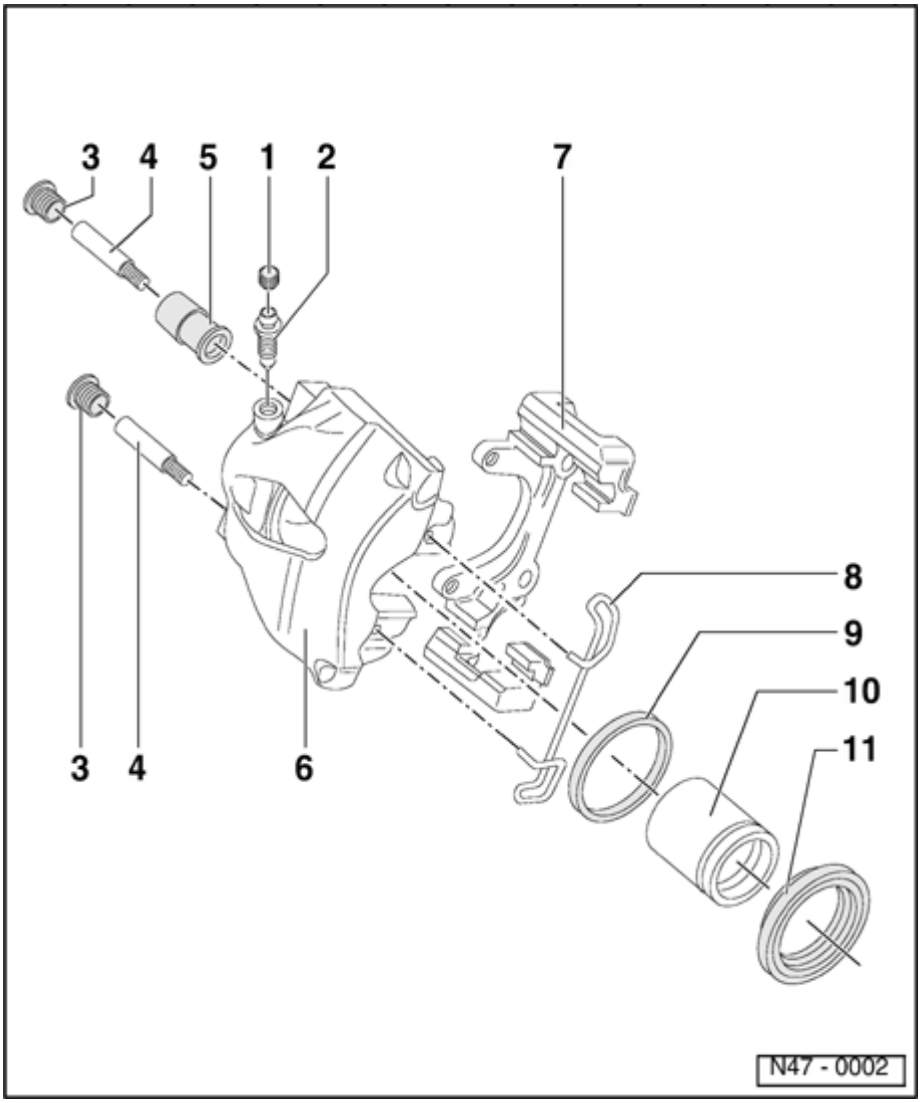

6 - Brake cylinder housing

7 - Brake carrier

- Install on brake caliper housing

8 - Retaining spring

- Install with both ends in the drillings in brake caliper housing

9 - Piston seal

- Remove using a screwdriver ⇒ Fig. 2

10 - Piston

- Force piston out of brake caliper using compressed air ⇒ Fig. 1
- Installing ⇒ Fig. 3 and ⇒ Fig. 4 and ⇒ Fig. 5
- First coat the piston lightly with brake cylinder paste.
- Piston diameter 54 mm

11 - Protective seal

- Do not damage when installing piston

47-12

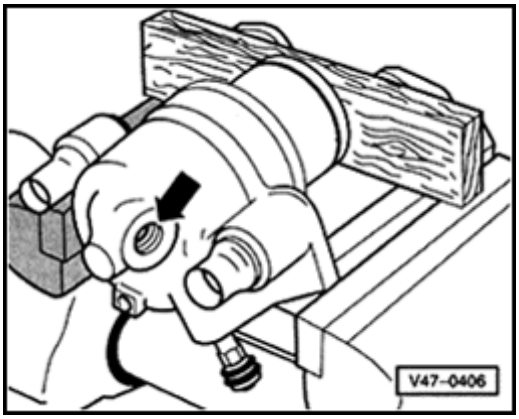

Fig. 1 Piston, pressing out of cylinder using compressed air

Note:

Place a piece of wood in the recess to prevent damaging the piston.

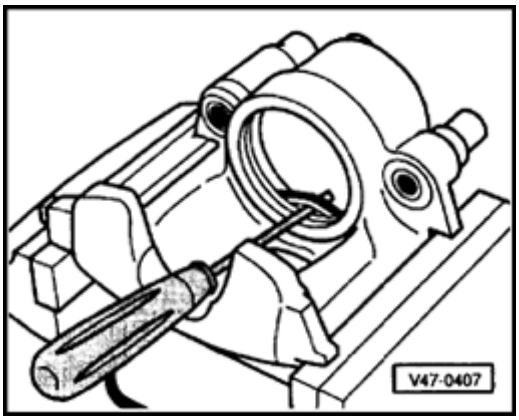

Fig. 2 Piston seal, removing

47-13

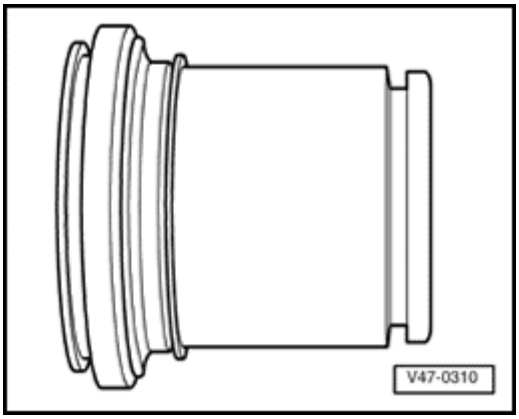

Fig. 3 Protective seal, installing

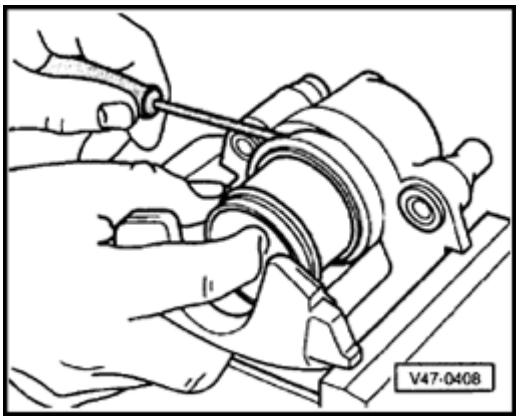

Fig. 4 Protective seal, installing

- Using a screwdriver, insert inner sealing lip into cylinder groove

Note:

Hold piston in front of caliper housing.

47-14

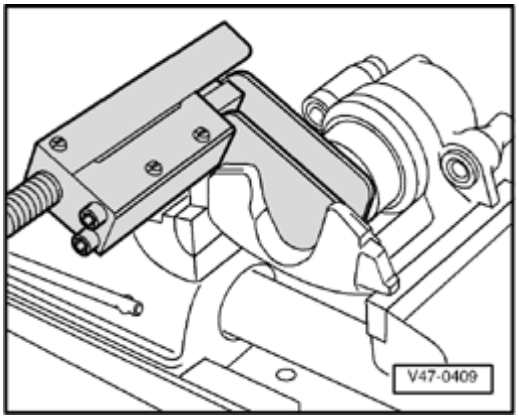

Fig. 5 Piston, installing

Note:

The protective seal outer sealing lip will then locate in the piston groove.

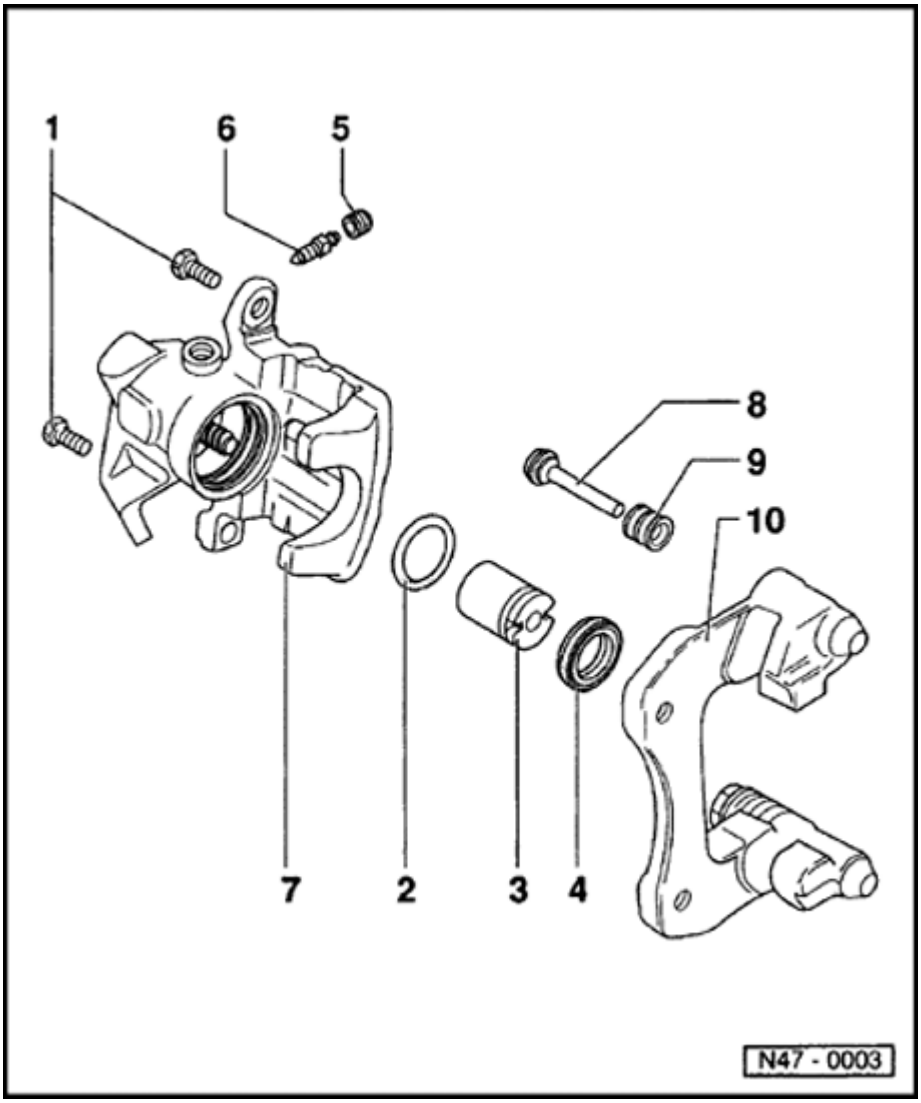

Rear brake caliper, servicing

Note:

- *Apply thin coat of brake cylinder paste to brake cylinder pistons and seal.*
- *When repairing install all parts supplied in repair kit.*
- *New brake calipers are filled with brake fluid and are pre-bled.*
- *When repairing it is essential to pre-bleed the brake calipers (without brake pads) before installing in the vehicle* ⇒ *Page 47-21*

1 - Self-locking bolts, 35 Nm (26 ft lb)

- Always replace
- When loosening and tightening counter-hold on guide pin

47-16

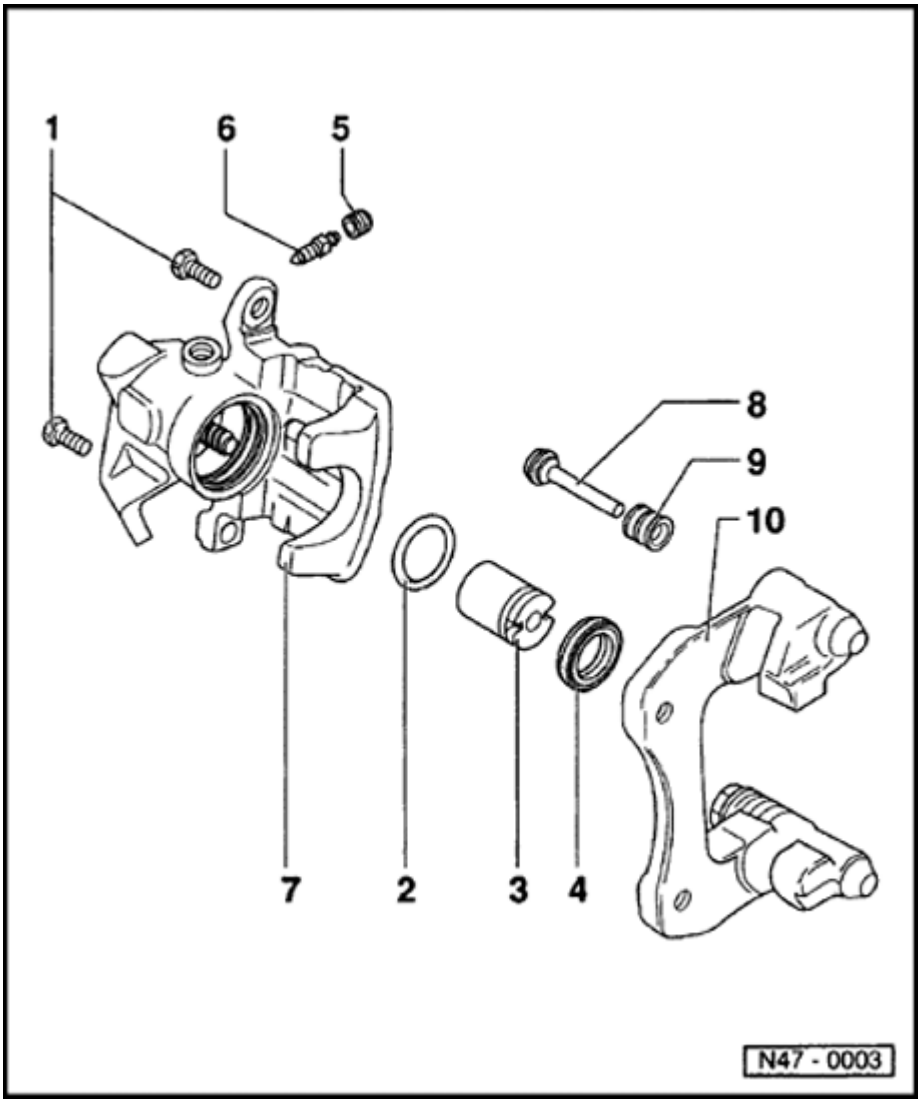

2 - Sealing ring

- Remove using a screwdriver ⇒ Page 47-19

3 - Piston with automatic adjustment

- Removing and installing ⇒ Page 47-19

4 - Protective seal

- Pull outer sealing lip onto piston
- Install inner sealing lip in brake caliper housing groove ⇒ Page 47-20

5 - Dust cap

6 - Bleeder valve

- Apply thin coat of brake cylinder paste before screwing in.

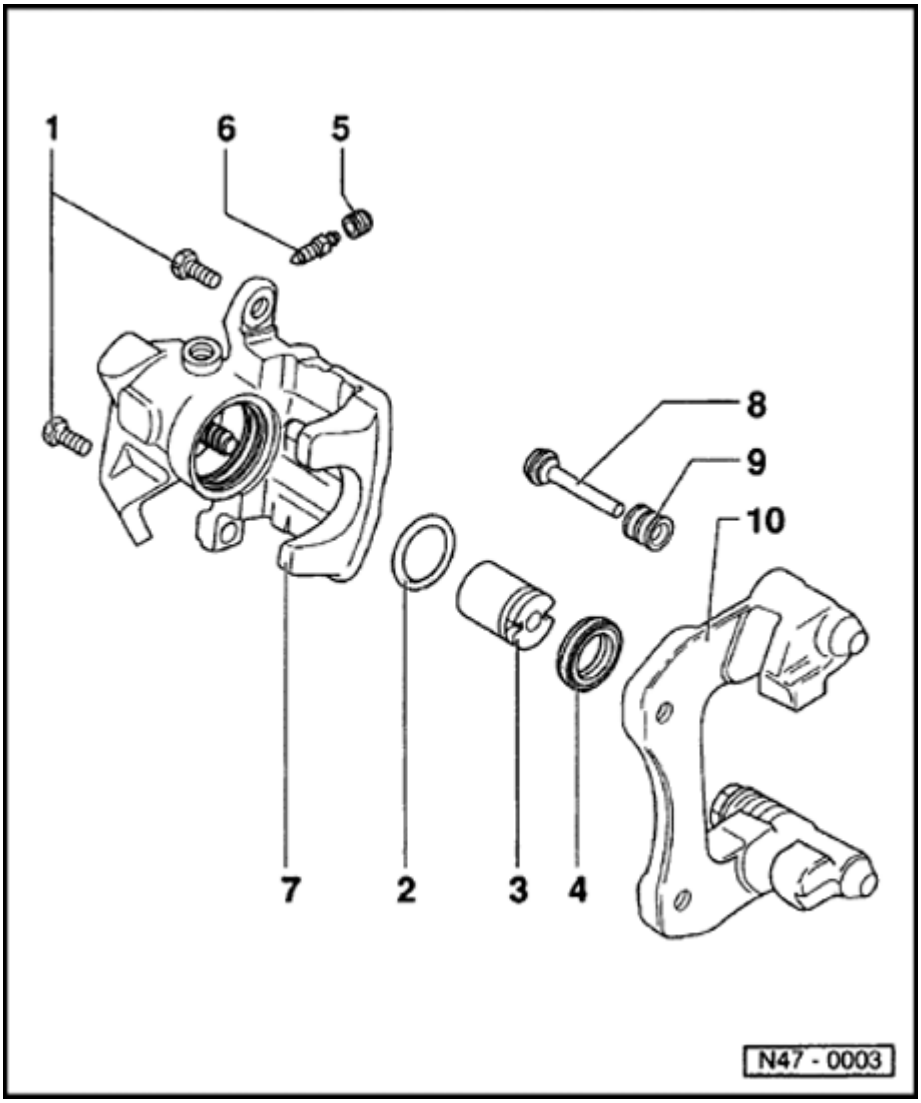

7 - Brake caliper housing with parking brake cable lever

- If a leak exists at the parking brake cable lever replace brake caliper housing
- After repairing, pre-bleed caliper housing ⇒ Page 47-21

8 - Guide pins

- Grease before pulling on protective cap

9 - Protective cap

- Pull onto brake carrier and guide pin

47-18

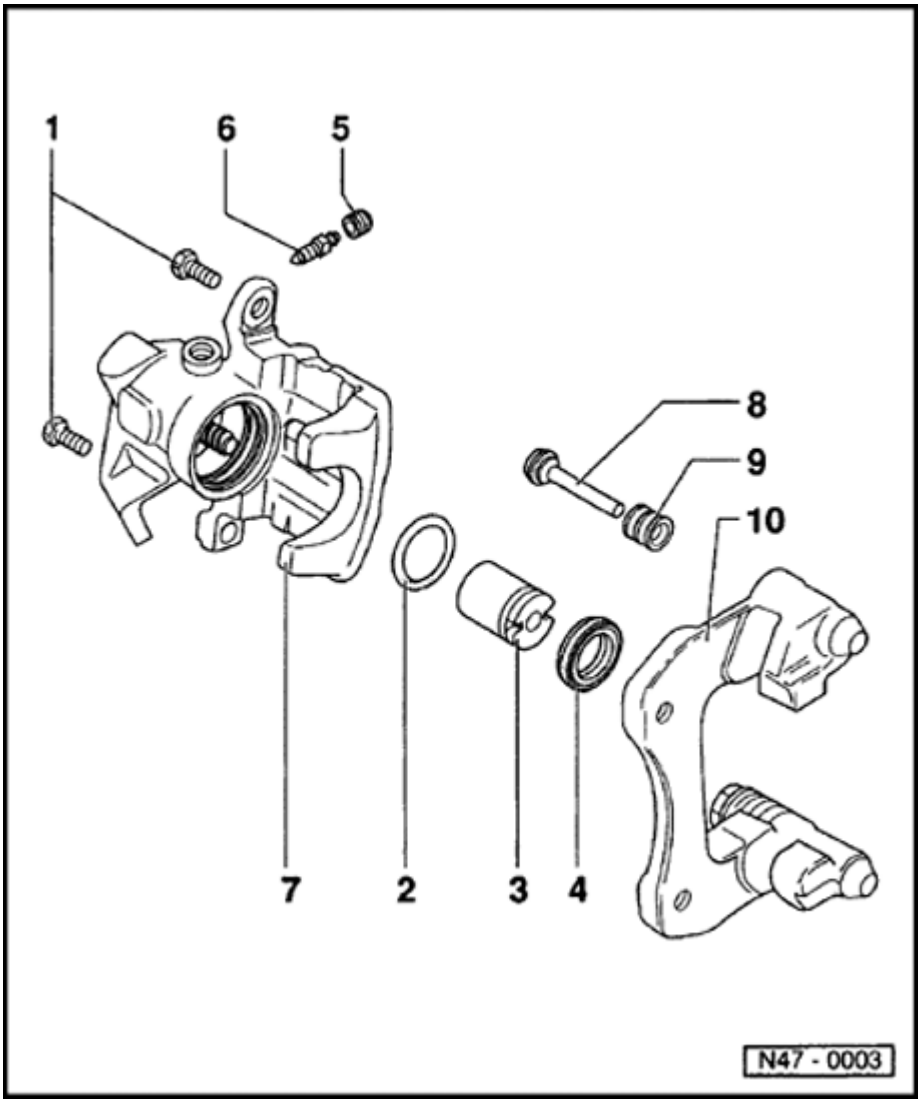

10 - Brake carrier with guide pin and protective cap

- Supplied as replacement part, assembled with sufficient grease on guide pins
- If protective caps or guide pins are damaged, install repair kit. Use grease packet supplied to lubricate the guide pins.

47-19

Rear brake caliper piston, removing and installing

Removing

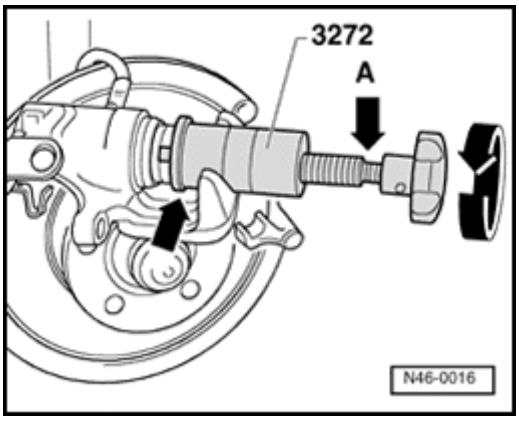

- Thread piston out of brake caliper housing by turning the knurled wheel counter-clockwise.

Note:

- *If piston is difficult to move, use a 13 mm open end wrench on the flats (arrow A) provided for this purpose.*
- *Install special tool 3272 so that the collar (arrow) is before the piston.*

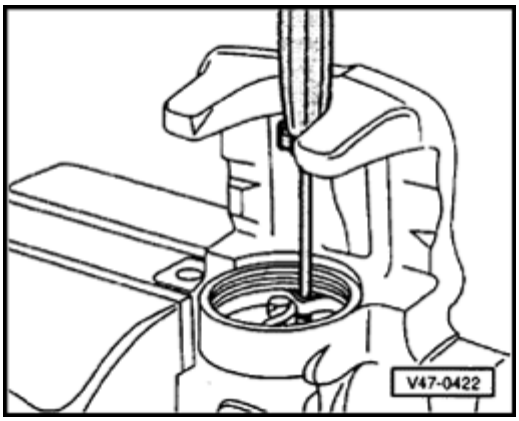

- Remove seal with a screwdriver

Note:

Make sure that the surface of the cylinder is not damaged during removal.

47-20

Installing

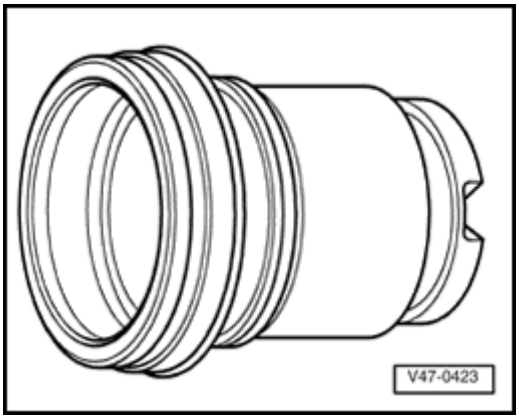

- Place protective seal with the outer sealing lip on the piston.

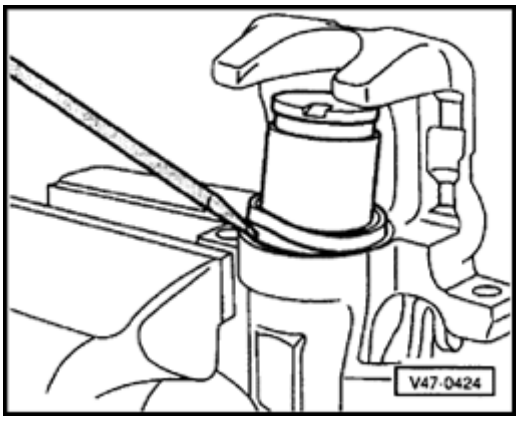

- Insert protective seal inner sealing lip into the caliper housing groove using a screwdriver.

Note:

Hold piston in front of brake caliper housing.

47-21

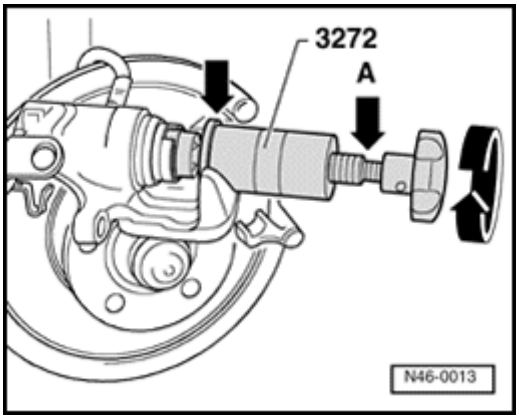

- Thread piston into housing by turning knurled wheel clockwise.

Note:

- *Install special tool 3272 so that the collar (arrow) of the tool is seated against the brake carrier.*
- *If piston is difficult to move, use a 13 mm open end wrench on flats (arrow A) provided for this purpose.*
- *If the piston is pushed back with a piston resetting tool or by operating the foot brake the automatic adjustment in the brake caliper is destroyed.*

- Install brake pads.

47-22

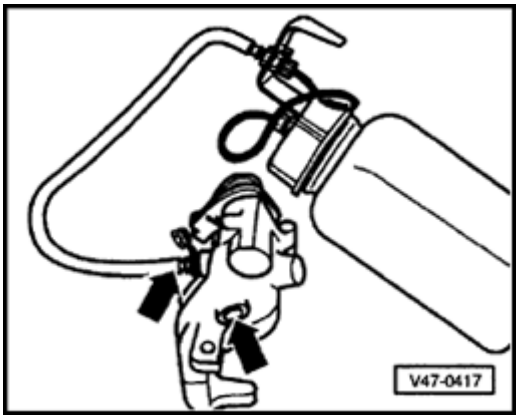

Pre-bleeding brake caliper

- Open bleeder valve and using a standard bleeder bottle, fill with brake fluid until bubble-free brake fluid flows from the threaded hole (brake hose connection). Close bleeder screw.

Note:

Position brake caliper as illustrated to pre-bleed.

Brake pressure regulator, checking and adjusting

Vehicles without ABS, vehicles with ABS, ABS/EDS, Teves 04

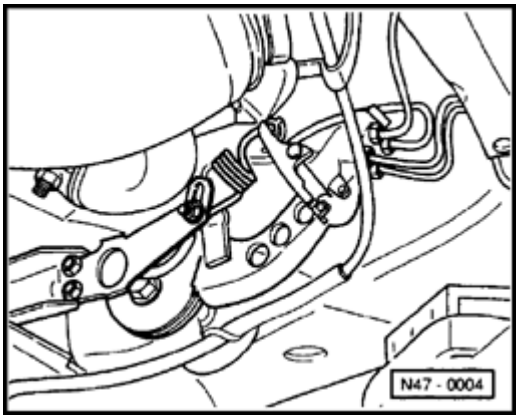

The brake pressure regulator is mounted on a bracket which is in turn fixed to a rear axle mounting bracket and is controlled from the rear axle by a spring.

Checking operation

Firmly depress the brake pedal and release quickly (vehicle standing on its wheels). This must cause the brake pressure regulator lever to move.

Checking and adjusting pressure

Note:

The brake pressure regulator is set with the vehicle unladened [1].

[1] The term "unladen" means: The weight of the vehicle ready for the road (full fuel tank, spare wheel, tool kit and jack).

47-24

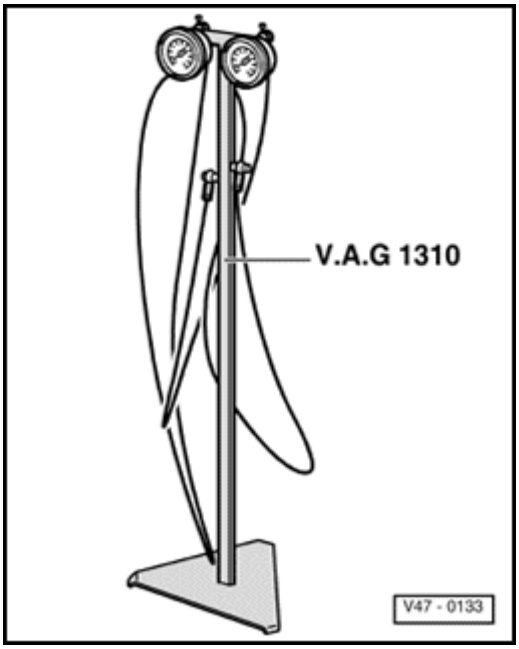

- Lift vehicle and connect pressure gauges to front left brake caliper and to rear right wheel cylinder/caliper.
- Bleed both gauges.

Note:

Bleeding brake system on vehicles with ABS ⇒ Page 47-27 .

- Lower vehicle and bounce the rear of the vehicle several times.
- Depress brake pedal and check pressures.
- Compare figures attained with specifications ⇒ Page 47-25 and if necessary adjust.

Load dependent brake pressure regulator specifications

Model / Version	Bar (psi)		Bar (psi)	
Rear axle drum	Front axle	50 (725)	Front axle	100 (1450)
brakes	Rear axle	30 - 36 (435 - 522)	Rear axle	51 - 57 (740 - 827)
Rear axle disc	Front axle	50 (725)	Front axle	100 (1450)
brakes	Rear axle	35 - 41 (508 - 595)	Rear axle	56 - 62 (812 - 899)
Four wheel drive	Front axle	50 (725)	Front axle	100 (1450)
	Rear axle	41 - 47 (595 - 682)	Rear axle	66 - 72 (957 - 1044)

Adjusting regulator

Rear axle test pressure too high:

- Release tension on regulator spring.

Rear axle test pressures too low:

- Tension regulator spring.

Note:

Do not adjust with brake pedal depressed, therefore observe the following sequence:

- Read off figures.
- Release pedal.
- Adjust spring.
- Depress pedal again.
- Read off figures and if necessary, readjust.
- Remove pressure gauges and bleed brake system ⇒ Page 47-27 .

Brake system, bleeding

Brake system, bleeding (vehicles with and without ABS, ABS/EDL)

Changing brake fluid

⇒ Repair Manual, Maintenance

Note:

- *Bleeding the brake system on vehicles with ABS, ABS/EDL is performed as for vehicles with conventional braking systems.*
- *Only use new brake fluid conforming to US standard FMVSS 116 DOT 4.*
- *Genuine VW/Audi brake fluid conforms to this specification.*
- *Brake fluid is poisonous. Also due to its corrosive effect brake fluid must not come into contact with paintwork.*
- *Brake fluid is hygroscopic, which means it absorbs moisture from the ambient air and should always be stored in air tight containers.*
- *Rinse off spillages using plenty of water.*

⇒ Repair Manual, Brake System On Board Diagnostic (OBD), Repair Group 01

47-28

Brake system, bleeding (with pressure bleeder VAS 5234)

Opening the hydraulic unit bleed screws on vehicles with ABS, ABS/EDL is not permitted!

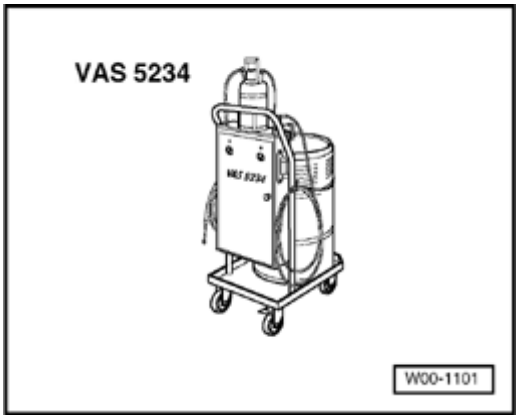

- Connect VAS 5234 Brake filler and bleeder unit.
- Open bleeder screws in the specified order and bleed brake calipers and wheel cylinders.

Bleeding sequence

1 - Right rear wheel cylinder/brake caliper

2 - Left rear wheel cylinder/brake caliper

3 - Right front brake caliper

4 - Left front brake caliper

Note:

- *On vehicles with brake pressure regulator move the regulator lever when bleeding rear brakes.*
- *Depress the brake pedal several times during bleeding.*

Brake system, bleeding (without pressure bleeder)

Opening the hydraulic unit bleed screws on vehicles with ABS, ABS/EDL is not permitted!

- Build-up brake pressure in brake system by pumping the brake pedal.
- Attach bleeder bottle hose and open bleeder screw.
- With brake pedal held down, close bleeder screw.
- Repeat operation until no air is present.

Bleeding sequence ⇒ Page 47-28

Changing brake fluid

⇒ *Repair Manual, Maintenance*

Steering

Assembly overview: steering column, column tube, steering wheel and airbag steering wheel

Airbag system functional check and interrogating Diagnostic Trouble Code (DTC) Memory.

⇒ *Repair Manual, Body Exterior, Interior, Repair Group 68 General body repairs*

Safety precautions when working on airbag

⇒ *Repair Manual, Body Exterior, Interior, Repair Group 68, General body repairs*

Note:

- *All parts marked with a [1] can be pre-assembled outside of the vehicle*
- *Pre-assembling steering column ⇒ Page 48-6*
- *Always replace self-locking nuts and bolts.*
- *Welding and straightening work on steering components is not permitted.*

48-2

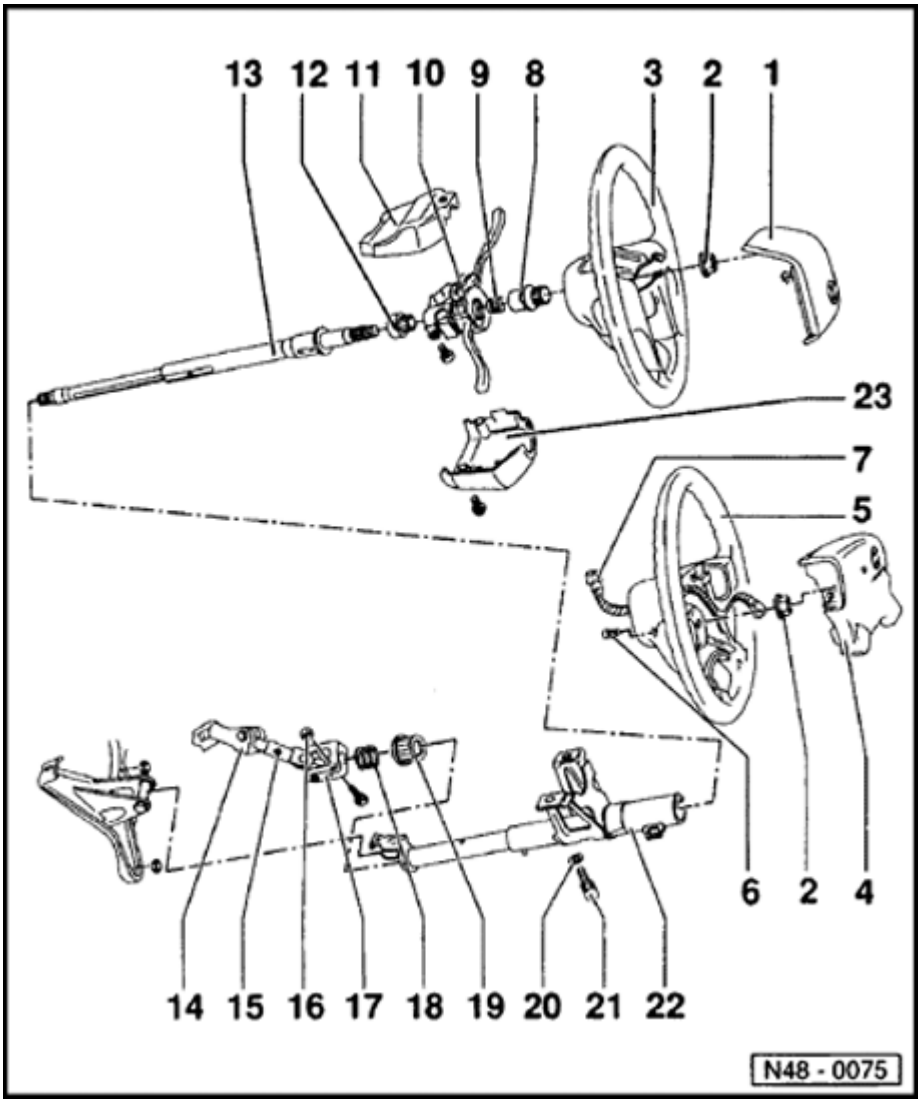

1 - Cover plate

2 - Hex nut, 50 Nm (37 ft lb)

3 - Steering wheel

- Install in center position

4 - Airbag unit

- Removing and installing ⇒ Page 48-7

5 - Steering wheel for airbag

- Removing and installing ⇒ Page 48-8
- Removing and installing
- Airbag Spiral Spring ⇒ Page 48-10

6 - Hex socket head bolt, 6.5 Nm (57 in lb)

- Always replace

7 - Connector

8 - Splined adapter sleeve

- Removing ⇒ Page 48-5
- Installing ⇒ Page 48-5

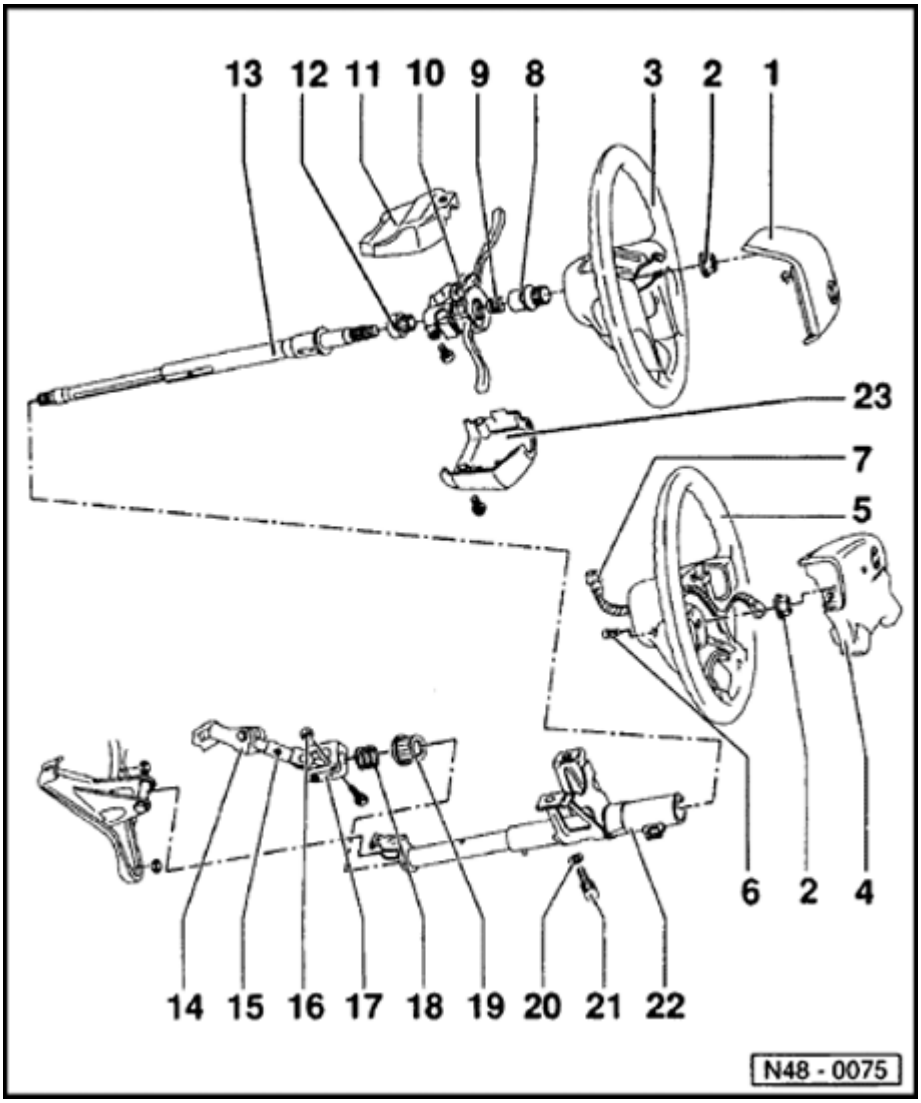

9 - Spring

10 - Steering column switch/steering lock housing[1)]

- Distance between steering wheel/steering column switch is not adjustable

11 - Upper trim

12 - Support ring[1)]

- With washer

13 - Steering column[1)]

- Remove by pulling upwards out of column tube
- Checking length ⇒ Page 48-6

14 - Hex bolt, 30 Nm (22 ft lb)

15 - Hex nut, 25 Nm (18 ft lb)

16 - Hex nut, 30 Nm (22 ft lb)

17 - Steering column universal joint

18 - Spring

48-4

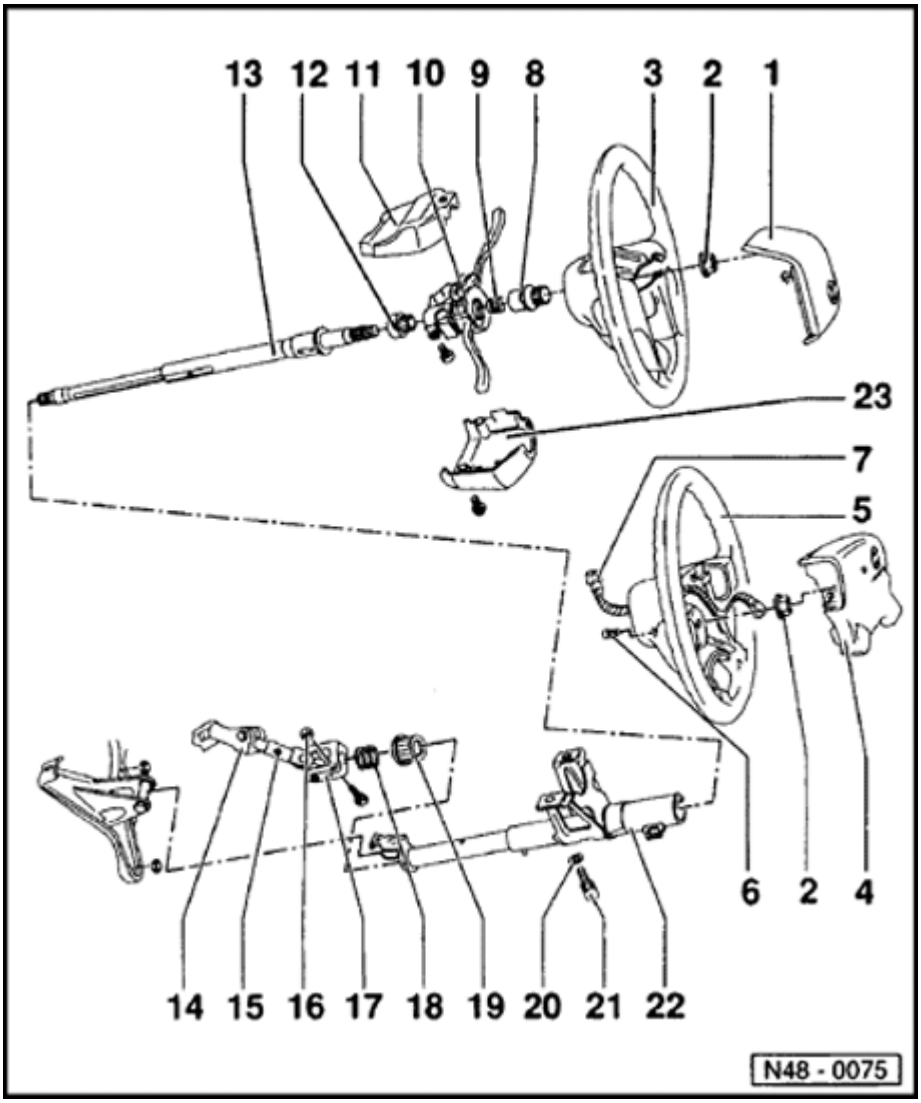

19 - Lower steering column bearing

- Pull in with VW 771 and large washer
- Drive out downward with a tube

20 - Washer

- Tighten until head shears off
- Drill out to remove

21 - Shear bolt

22 - Column tube

23 - Lower trim

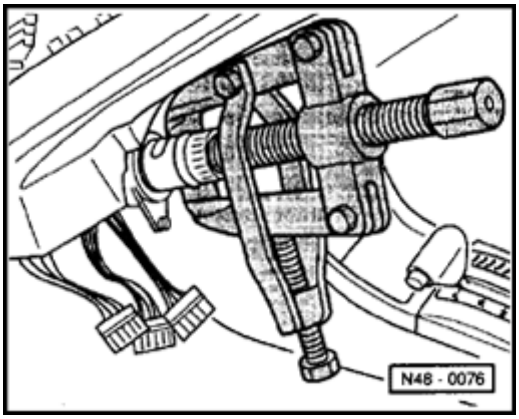

Fig. 1 Splined adapter sleeve, removing

Only use puller with leg clamp (e.g. Kukko 204/2 commercial type).

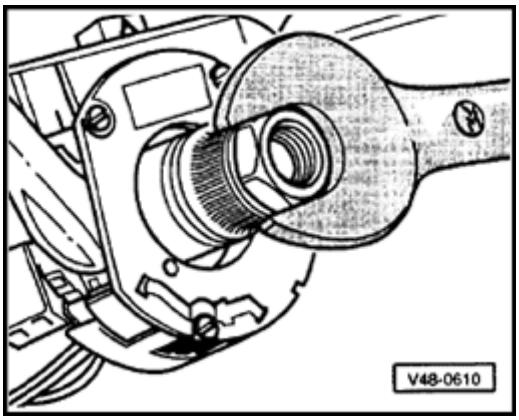

Fig. 2 Splined adapter sleeve, installing

- Place sleeve on steering column and press on with hex nut.
- Remove nut, place on washer and press sleeve fully on with nut until sleeve is firmly seated.

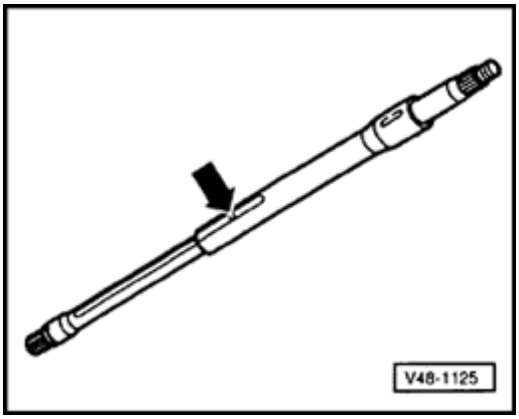

Fig. 3 Length of steering column, checking

The small metal lug on the lower section must be visible in the hole in the upper section (arrow). If necessary pull both sections firmly apart onto stop or press together.

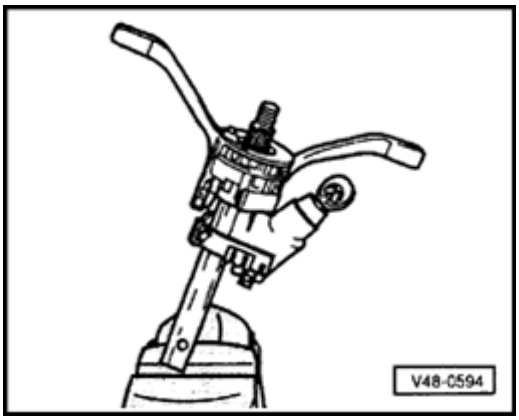

Fig. 4 Steering column, pre-assembling

- Carefully clamp the lower section of the steering column in a vice so that the upper part is supported on the jaws.

48-7

Airbag unit, removing and installing

Removing

- Disconnect battery Ground strap.

- Center steering wheel (wheels straight-ahead).

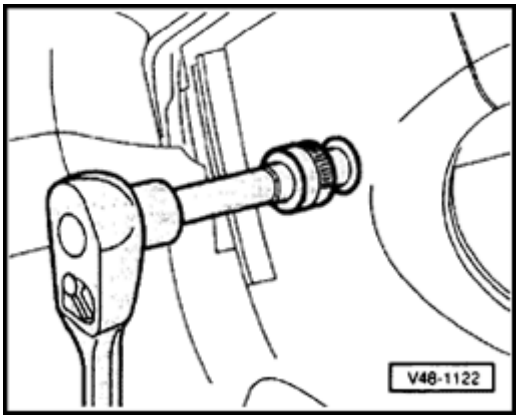

- Remove both socket head bolts from airbag unit.
- Remove airbag unit from steering wheel and disconnect wiring connector from airbag unit.

Installing

Install in reverse order

Note:

Only use new hex socket head bolts for airbag unit. Tightening torque: 6.5 Nm (57 in. lb).

- After installing the airbag unit, switch on ignition then connect battery Ground strap.

CAUTION!

Make sure that no one is in the vehicle when connecting the battery Ground strap.

Airbag steering wheel, removing and installing

Removing

- Remove airbag unit. ⇒ Page 48-7

- Remove trim below steering column switch.

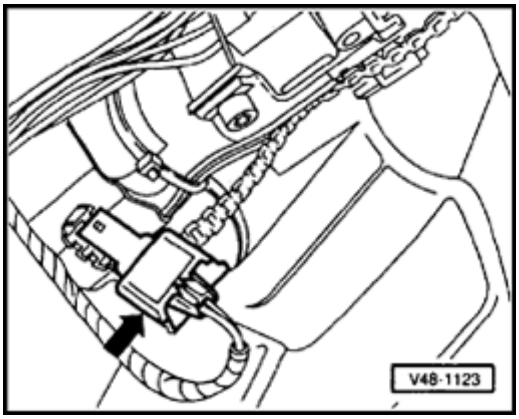

- Separate connector (arrow). (Pull foam rubber sleeve off connector, if installed).
- Remove nut and pull steering wheel off steering column.

Note:

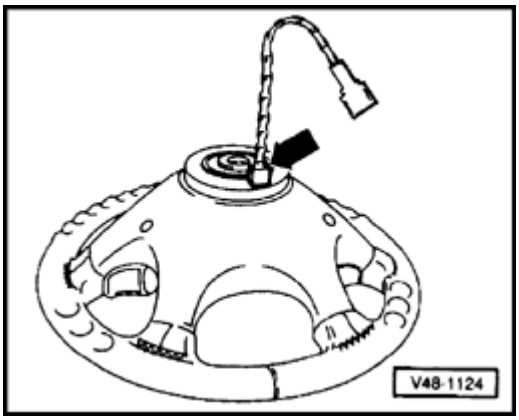

After pulling steering wheel off, turn Airbag Spiral Spring slightly so that the wire (arrow) faces downward. (Hold steering wheel in installation position). The spring then locates and is prevented from turning.

If this step is not performed or if the spring is tufted in an uncontrolled manner, it can lead to the spring being overstressed at full lock, causing irreparable damage.

Installing

- Install steering wheel, install nut and tighten. Tightening torque: 50 Nm (37 ft lb).

- Connect airbag unit connector below steering wheel.

- Install trim panel below steering column. Make sure that the centering ring wiring connection is located in the recess in the trim panel.

- Connect connector in steering wheel to airbag unit connector.

- Install airbag unit ⇒ Page 48-7

Note:

Use new hex socket head bolts for airbag unit.

- After installing the airbag steering wheel first switch on ignition, then connect battery Ground strap.

CAUTION!

Make sure that no one is in the vehicle when connecting the battery Ground strap.

Airbag Spiral Spring, removing and installing

Remove airbag unit ⇒ Page 48-7

Remove steering wheel ⇒ Page 48-8

- Separate single connector for horn.

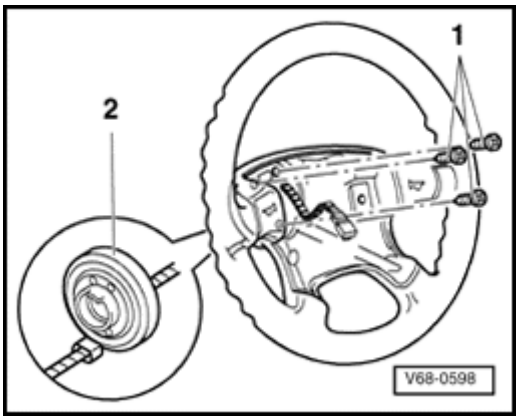

- Remove screws -1- and remove Airbag Spiral Spring -2- from steering wheel.

Install steering wheel ⇒ Page 48-9

Install airbag unit ⇒ Page 48-7

Note:

- *When removing and installing the Airbag Spiral Spring, ensure that it is in the center position.*
- *As a new part the Airbag Spiral Spring is secured in the center position by a cable tie.*

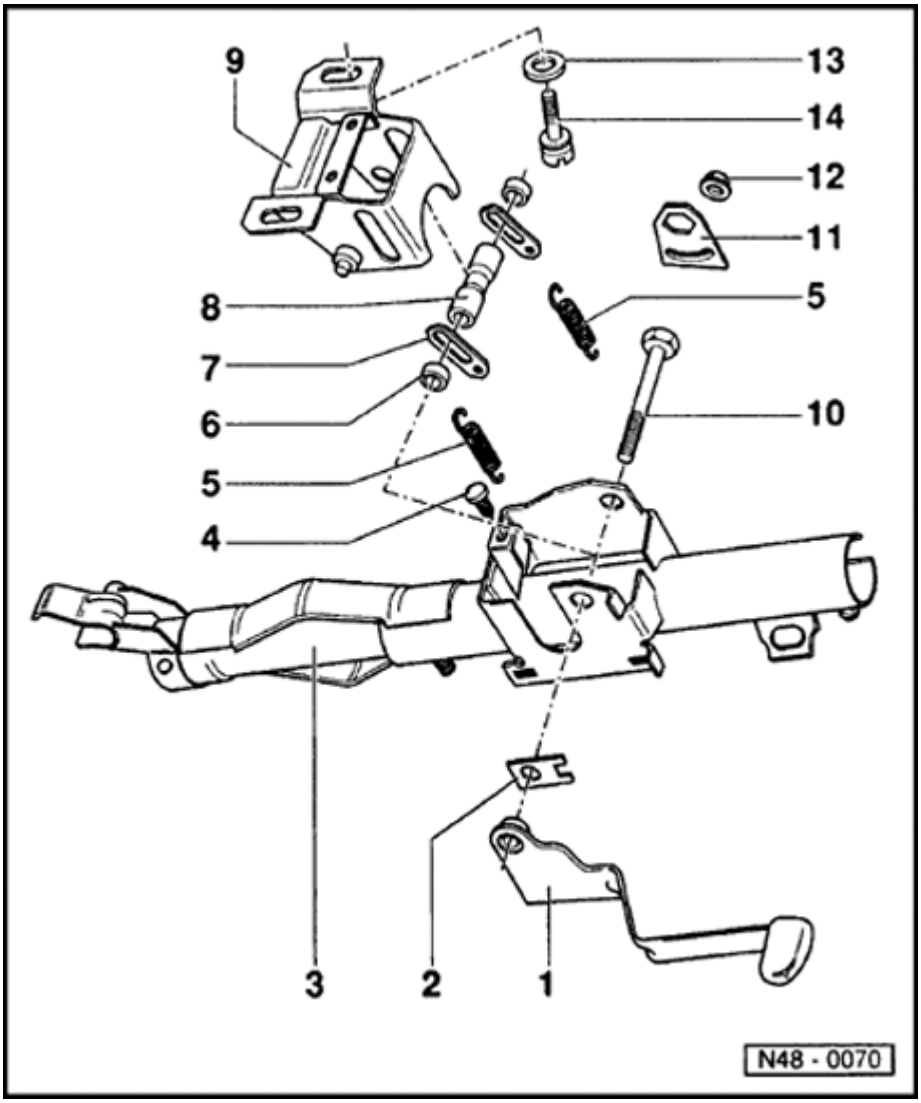

Column tube for height adjustable steering wheel, removing and installing

The column tube can be adjusted in height by approx. 50 mm

1 - Operating lever

2 - Packing plate

3 - Column tube

- Square housing fits over mounting bracket

4 - Rubber stop

5 - Return spring

- Hooked into mounting bracket and column tube

6 - Thrust washer

7 - Packing plate

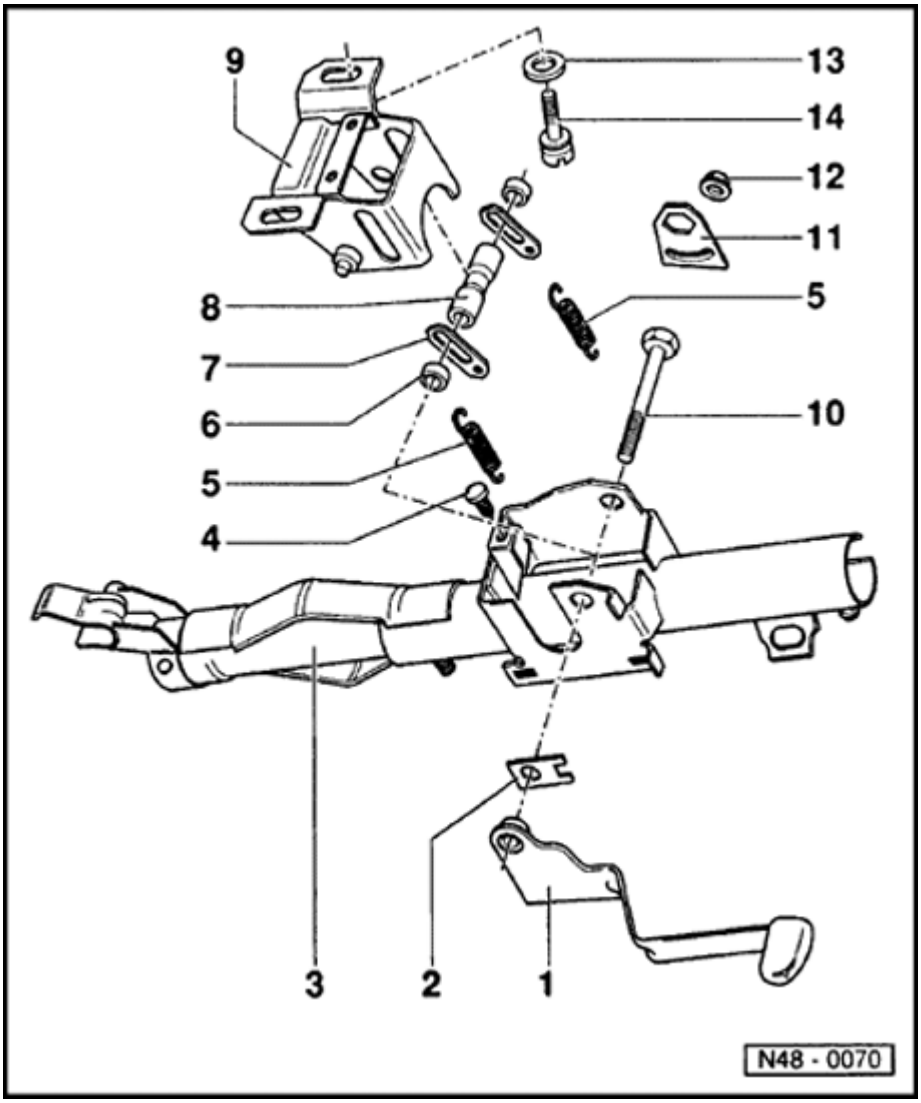

8 - Clamping sleeve

9 - Mounting bracket

- Before assembling, coat side sliding surfaces with MoS_2 paste

10 - Bolt with left-hand thread

- Tighten to 22 Nm (16 ft lb),
- After tightening install locking plate

11 - Locking plate

12 - Locking plate nut, 8 Nm (70 in. lb)

- Self-locking
- Always replace

13 - Washer

14 - Shear bolt

- Tighten until head shears off

48-13

Pump delivery pressure, checking

- Disconnect pump pressure line.

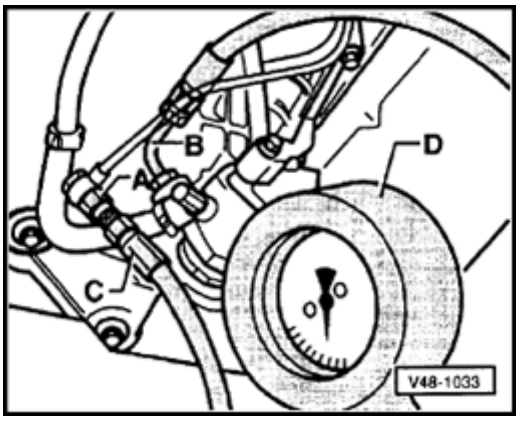

- Install adapter and test equipment. Cut-off valve on gauge open.
- Start engine and if necessary add fluid to reservoir.

A - VAG 1402/2

B - VAG 1402/1

C - Hose from adapter kit VAG 1402/6

D - VAG 1402

Test requirements:

- V-belt/V-belt tension OK.
- System not leaking.
- Hoses/lines are not kinked or restricted.

- With engine running at idling speed. Close cut-off valve (not longer than 5 seconds) and read off pressure.

  - Specification: 85 - 95 bar (1232 - 1377 psi)

Note:

- *If the reading is higher or lower than specified replace pump.*
- *Vehicles with up to 110 kW engine* ⇒ *Page 48-90* .
- *Vehicles with 128 kW engine* ⇒ *Page 48-97* .
- *If reservoir fluid level is low then check steering system for leaks.*
- *For leaks at the pinion first check the lines/line connections for leaks and if necessary tighten and wipe dry.*
- *If the pinion seal or the rack seals in steering box housing are leaking then replace steering gear.*
- *To check the rack seals loosen the clamp on the boot and push to one side.*

Power steering gear, removing and installing

When working on the power assisted steering gear:

- Absolute cleanliness is required when working on the power steering.
- Thoroughly clean connections and immediate vicinity before loosening.
- Place parts on a clean surface and cover if not re-installing immediately.
- Do not use fluffy cloths.
- Only unpack parts immediately prior to installation.
- Only use genuine packed parts.
- Vehicles with four wheel drive observe installing heat shield.

Removing

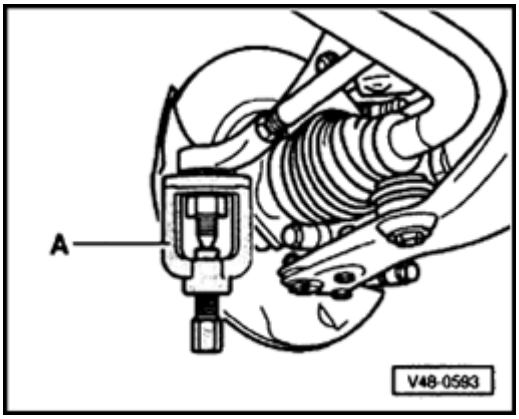

- Press tie rods off steering arm.

A - Ball joint splitter (commercial type) e.g. Kukko No. 128/2

- Remove partition behind pedals from bulkhead and from steering column tube to loosen the universal joint/power steering gear.

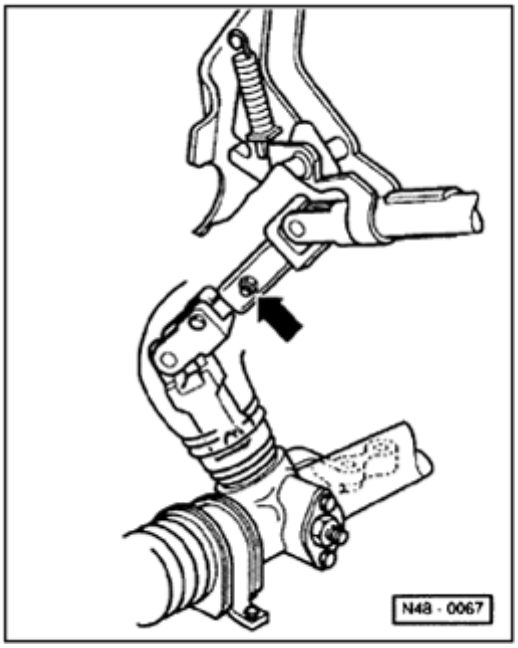

- Loosen nut on the universal joint (arrow).
- Remove hydraulic fluid from reservoir with an oil extraction unit, e.g. VAG 1358 A or VAG 1307 A.

If an oil extraction unit is not available, disconnect vane pump supply hose and drain hydraulic fluid.

48-17

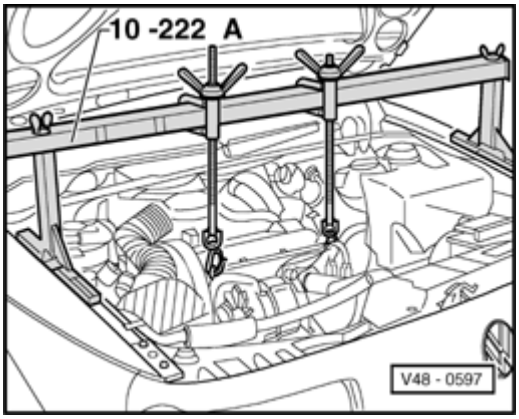

- Support engine/transmission assembly with 10-222 A and 10-222 A/1 (support VR6 engine with 10-222A and 10-222A/3).
- Remove boot from seat on steering gear.
- Remove subframe bolts.
- Lower engine/transmission assembly; this will pull the two halves of the universal joint apart.
- Disconnect hoses from steering gear and seal with plastic bag and adhesive tape.
- Seal power steering gear threaded holes with plastic sealing plugs.

Instead of plastic sealing plugs a plug consisting of

Part No.113 301 229 A and banjo bolt, Part No. N 904 674 01 can be used. But when using these, several 16 mm diameter sealing rings must be used so that the holes in the banjo bolt are sealed.

- Remove steering gear securing nuts (bolts remain in subframe).
- Remove steering gear rearward.

Installing

Install in reverse order.

- Check position of steering wheel and, if necessary, align front end.

Note:

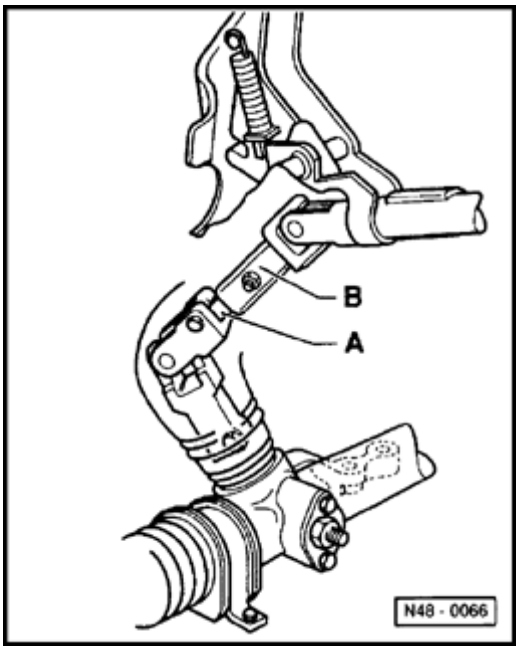

- *When lifting the engine/transmission assembly guide the lower half of the universal joint shaft -A- into the upper half -B- at the same time (second mechanic necessary).*
- *Coat boot with lubricant, e.g. soft soap, before pulling onto steering gear.*

Tightening torques:

Universal joint shaft	25 Nm (18 ft lb) halves
Steering gear	30 Nm (22 ft lb)
Tie rod joint	35 Nm (26 ft lb)
Subframe front and rear	70 Nm (52 ft lb) and turn 90° further
Rear subframe bracket	65 Nm (48 ft lb)

Assembly overview: power assisted steering box (TRW)

Determine cause of any malfunctions using pressure and leak testing, ⇒ Page 48-13 .

Note:

- *Always replace self-locking nuts and bolts.*
- *Welding and straightening work on steering components is not permitted.*
- *To grease the rack only use steering gear grease, Part No. AOF 063 000 04.*
- *Type of oil: Hydraulic oil G 002 000*
- *Oil system capacity: 0.7 - 0.9 ltr. (0.74 - 0.95 qt)*
- *Supply and pressure line routing from ⇒ Page 48-85 .*

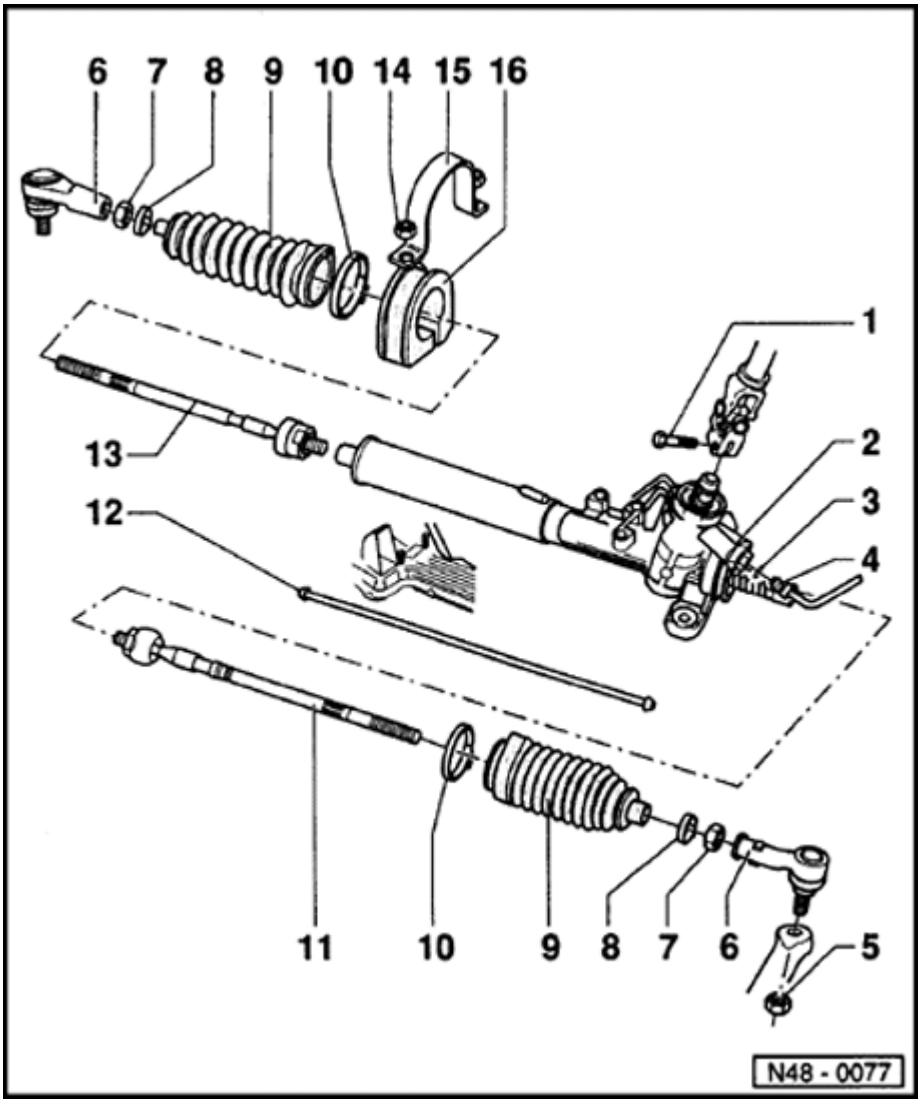

1 - Self-locking nut 35 Nm (26 ft lb)

2 - Self-locking 30 Nm (22 ft lb)

3 - Clamp

4 - Rubber mounting

- Internal diameter ZF: 50 mm TRW: 44 mm

5 - Right-hand tie rod

- 70 Nm (52 ft lb)
- Removing and installing ⇒ Page 48-77
- Vehicle alignment ⇒ Page 44-1
- Tie rod boot seat diameter ZF: 15 mm dia. TRW: 12.7 mm dia.
- It must not be installed on a ZF power steering gear

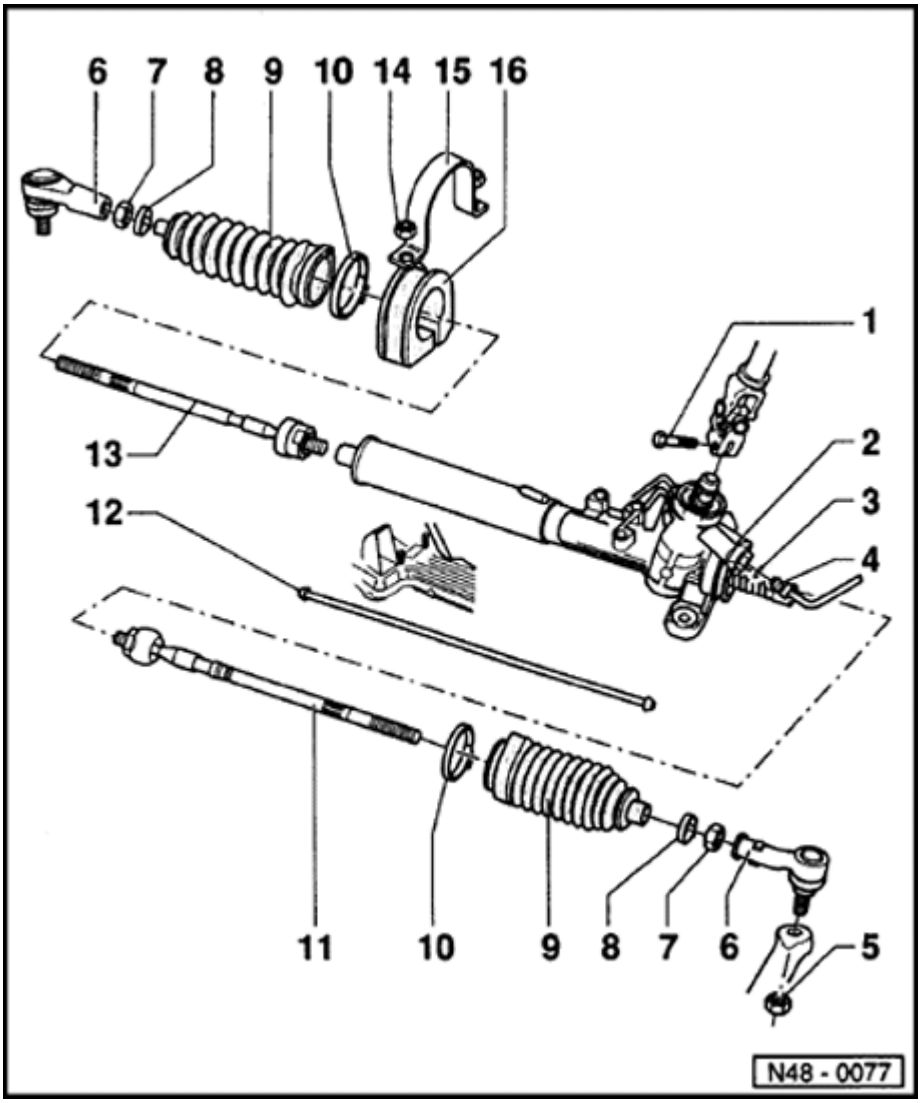

6 - Left-hand tie rod

- 70 Nm (52 ft lb)
- Removing and installing ⇒ Page 48-77
- Adjusting to length ⇒ Page 48-84
- Tie rod boot seat diameter ZF: 15 mm TRW: 12.7 mm
- Must not be installed on a ZF power steering gear

7 - Hex nut 50 Nm (37 ft lb)

8 - Boot

- Pull on and off over tie rod
- Can be replaced with steering gear installed
- Must not be twisted after adjusting toe
- Must not be installed on a ZF power steering gear

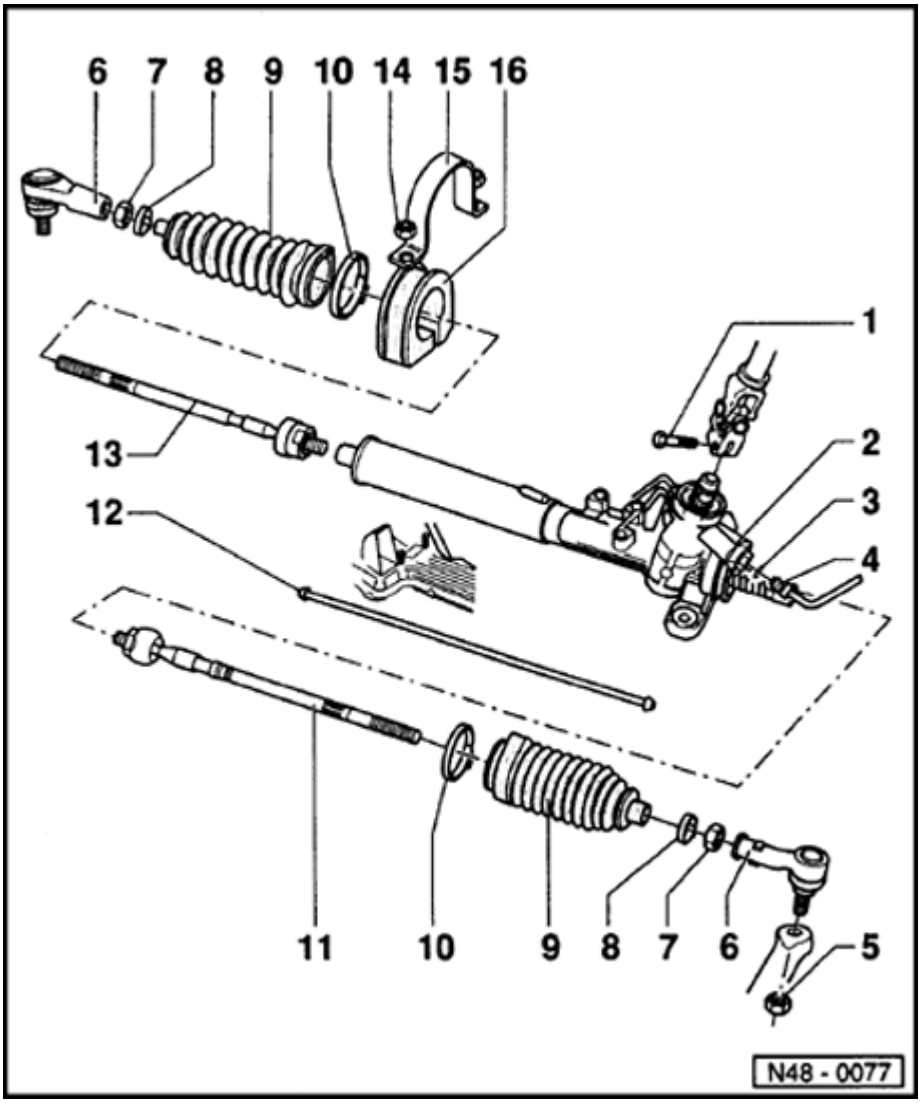

9 - Steering gear

- Removing and installing ⇒ Page 48-15
- Adjusting ⇒ Page 48-24

10 - Tie rod end

- Separating ⇒ Page 48-16
- Checking:

⇒ *Repair Manual, Maintenance*

11 - Hex nut 30 Nm (22 ft lb)

12 - Universal joint

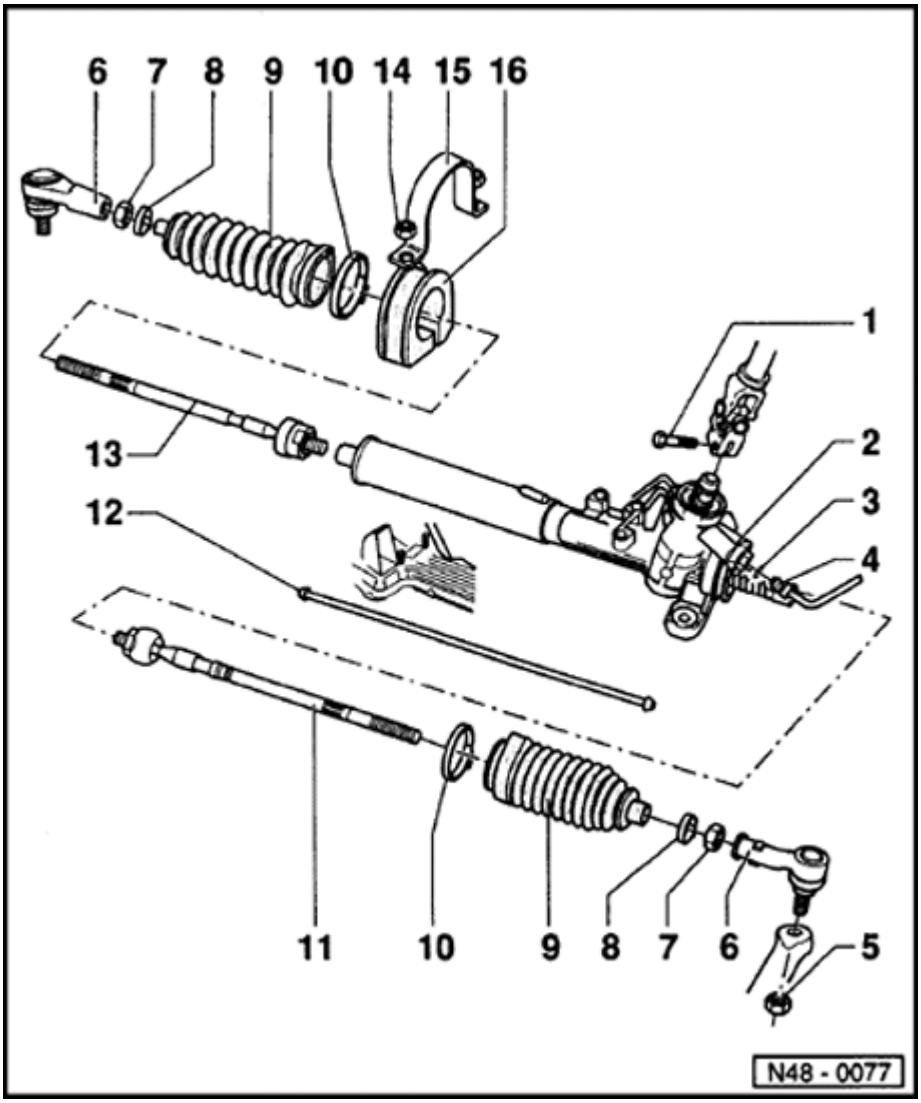

13 - Threaded connection 30 Nm (22 ft lb)

- Return line

14 - Sealing ring

- Always replace

15 - Hose clamp

- Always replace - open with pliers
- Tensioning ⇒ Page 48-81

Power steering gear, adjusting (TRW)

Note:

- *Two Mechanics are required when adjusting. Adjust with engine switched off*

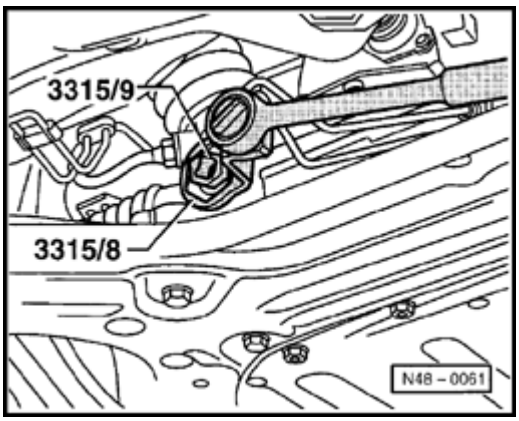

Adjusting steering box

- Raise vehicle on hoist.
- Wheels in straight-ahead position.

By turning the steering wheel back and forth (about 30° to center axis) a knocking noise will be heard if there is excessive play.

- Loosen locking nut (counter-hold with 3315/9).
- Carefully turn adjustment screw (arrow) into cover until knocking noise can no longer be heard inside vehicle.
- Tighten locking nut.
- Complete a road test ensuring that when maneuvring or negotiating corners the steering self-centers without binding.

Power steering gear, disassembling and reassembling (TRW)

This repair is limited to replacing the sealing rings and, if necessary, the toothed rod. Steering gears that are damaged by an accident must be replaced.

For a satisfactory and successful repair, the greatest care, safety and proper tools are required. The special tool set 3315 that is pictured is also a part of this.

Note:

- *Clean hose connections and their surroundings thoroughly before opening.*
- *Thoroughly clean work place (workbench, vise) before starting work if necessary place paper towels on the working surface.*
- *Place parts that have been removed on a clean surface. If the repair will not be carried out immediately, cover parts.*
- *Do not use cloths with lint.*
- *All the replacement parts that are needed are contained in the repair kit.*
- *Only take replacement parts out of the package right before installing. Use only parts in original packaging.*
- *Always install all of the parts in the repair kit*

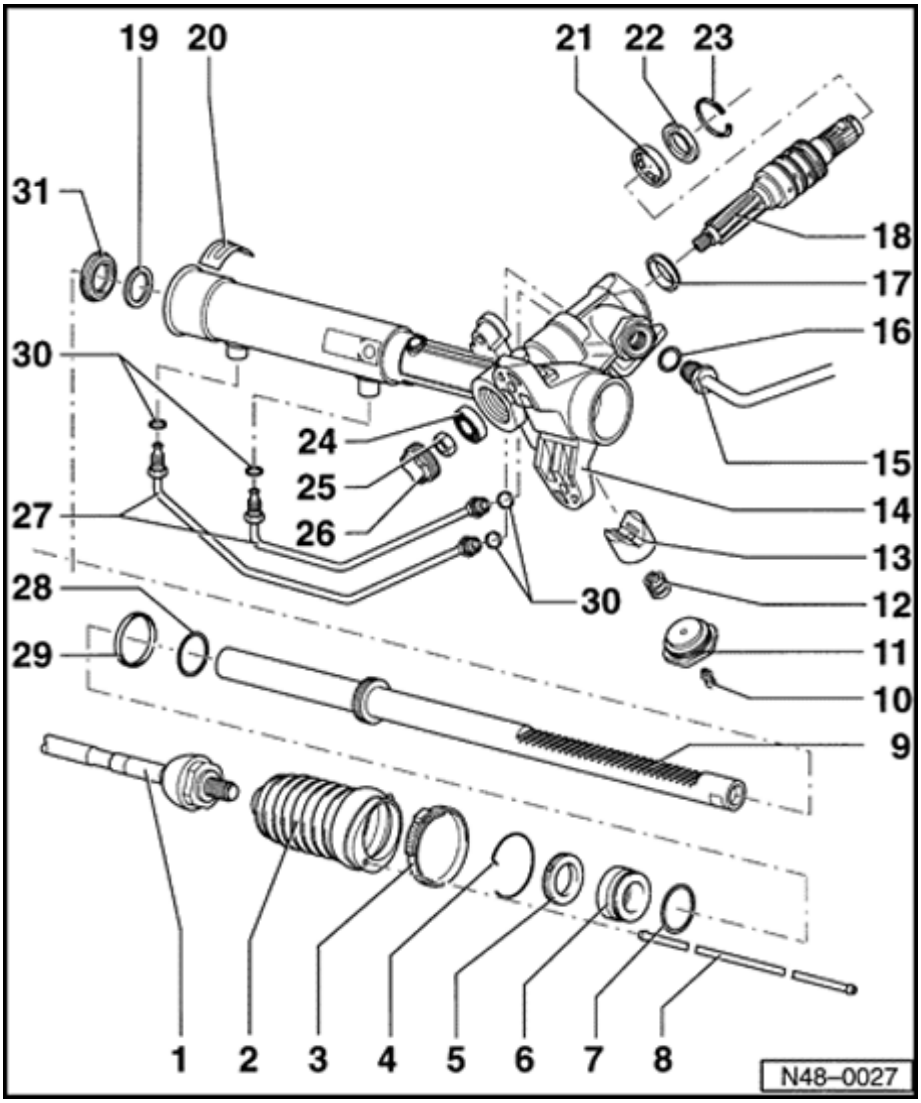

1 - Tie rod

- For removing, see tie rod, removing and installing (TRW and ZF power steering gear) ⇒ Page 48-77

2 - Boot

- Installing, see tie rod, removing and installing (TRW and ZF) power steering), ⇒ Page 48-77

3 - Hose clamp

- Open with nipper pliers
- Installation position and tightening, see tie rod, removing and installing (TRW and ZF power steering), ⇒ Page 48-77
- Always replace

4 - Circlip

- Always replace

5 - Lock washer

6 - Toothed rod guide

- Supplied in repair kit as assembly with sealing ring
- Always replace

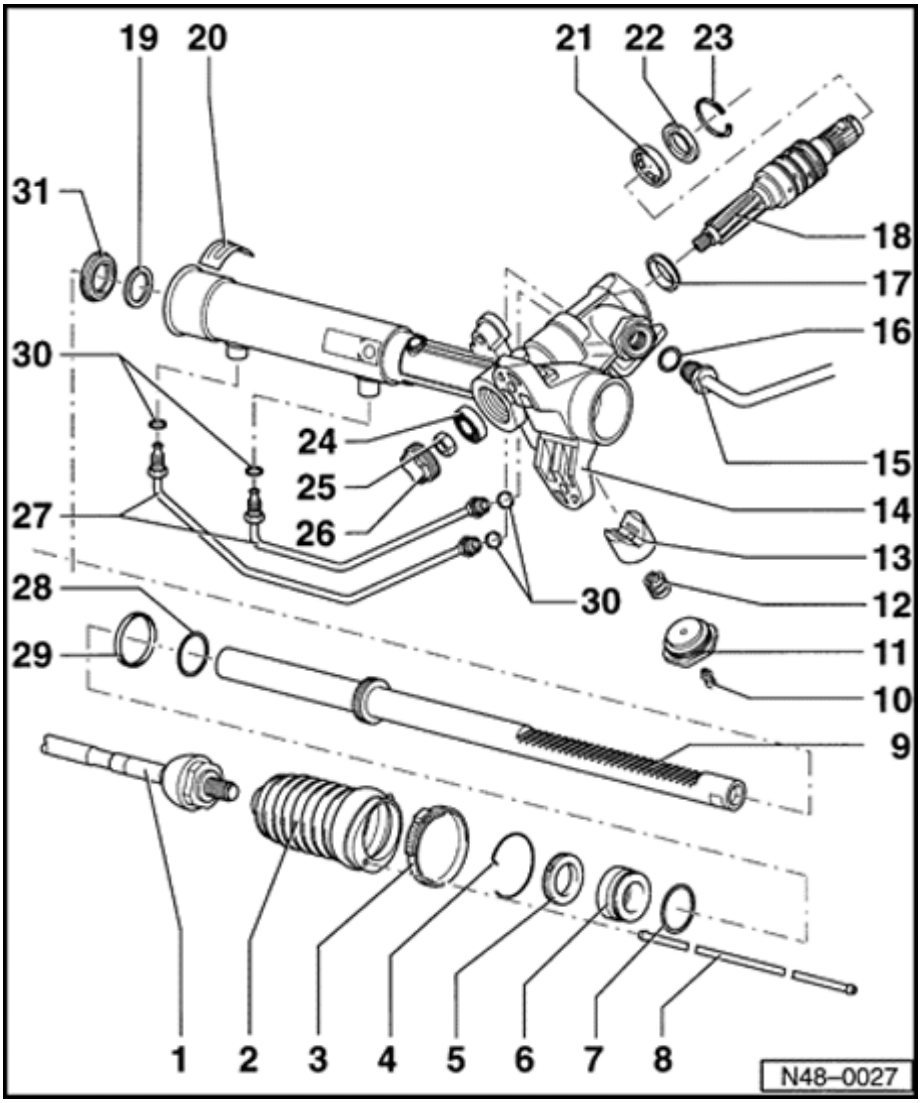

7 - O-ring

- Is assembled on toothed rod guide (item -6-) contained in the repair kit

8 - Pressure compensating tube

- Check for damage (dents and kinks)

9 - Toothed rod

- Check for scoring
- After removing lubricate immediately with hydraulic oil (corrosion protection)
- Supplied as a replacement part, for assignment see replacement parts fiche

10 - Plug

- Is only installed if the toothed rod was replaced
- To install, drill hole in the adjusting bolt ⇒ Page 48-51
- Supplied in repair kit

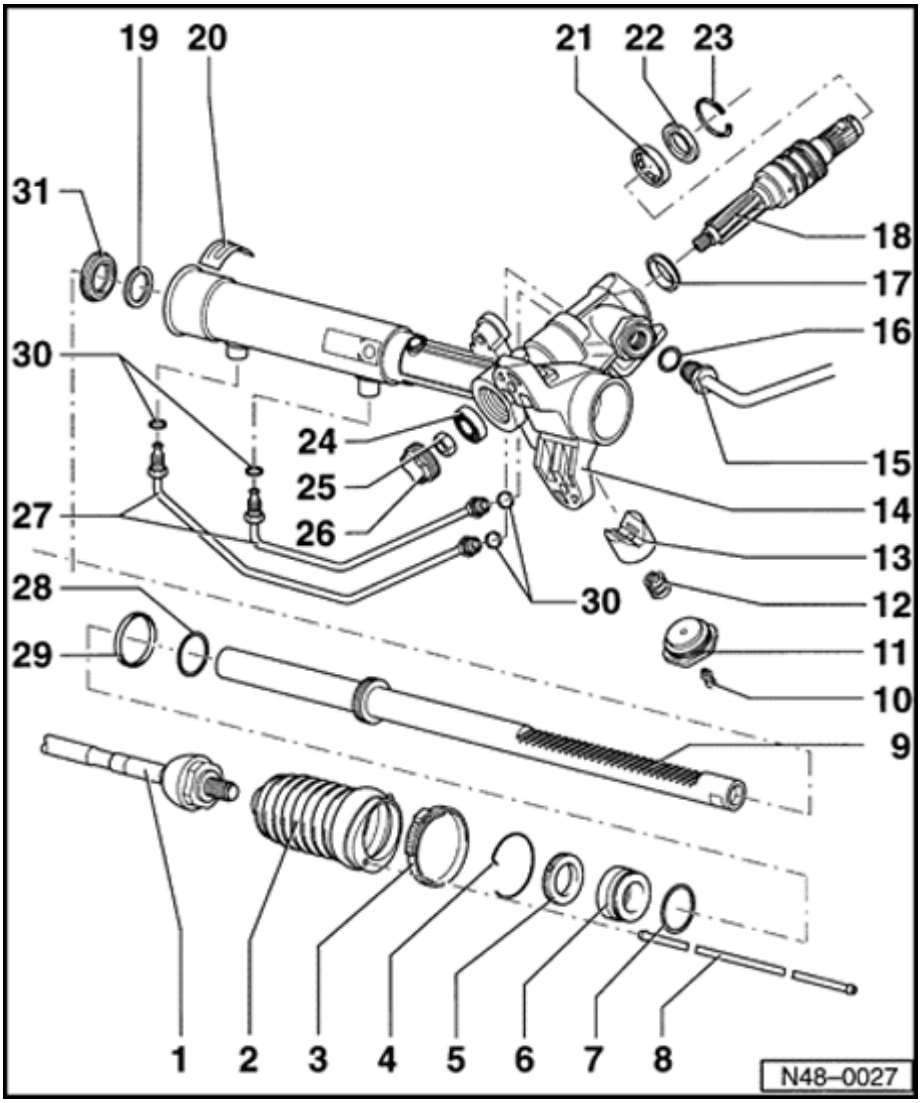

11 - Adjusting screw with lock nut, 60 Nm (44 ft lb)

- Before removing, mark position of adjusting bolt and lock nut on housing
- Steering gear, adjusting ⇒ Page 48-24

12 - Pressure spring

13 - Pressure piece

- Mark installation position

14 - Housing

- Check cylinder race for scoring, if necessary replace steering gear complete

15 - Inverted tube nut, 30 Nm (22 ft lb)

16 - O-ring

- Always replace
- Is not included in repair kit - see Parts catalog

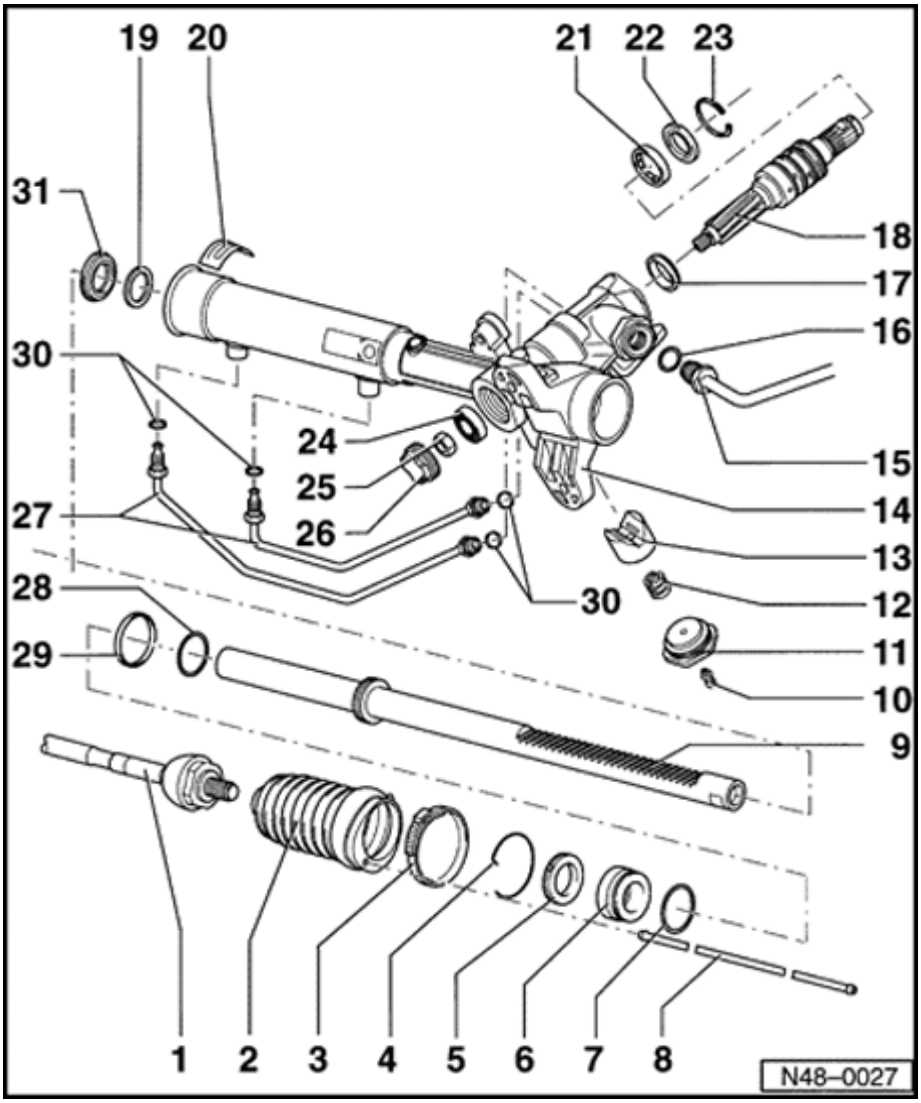

17 - Sealing ring

- Always replace

18 - Valve body

- Removing ⇒ Page 48-32
- Cannot be repaired
- Is not supplied as replacement part, if damaged replace steering gear

19 - Support ring

- Eliminated starting 4/92
- If present, it must be reinstalled

20 - Adhesive film

- Thoroughly clean housing in this area before sticking on, e.g. with thinner, adhesive surface must be free of oil and grease
- Always replace

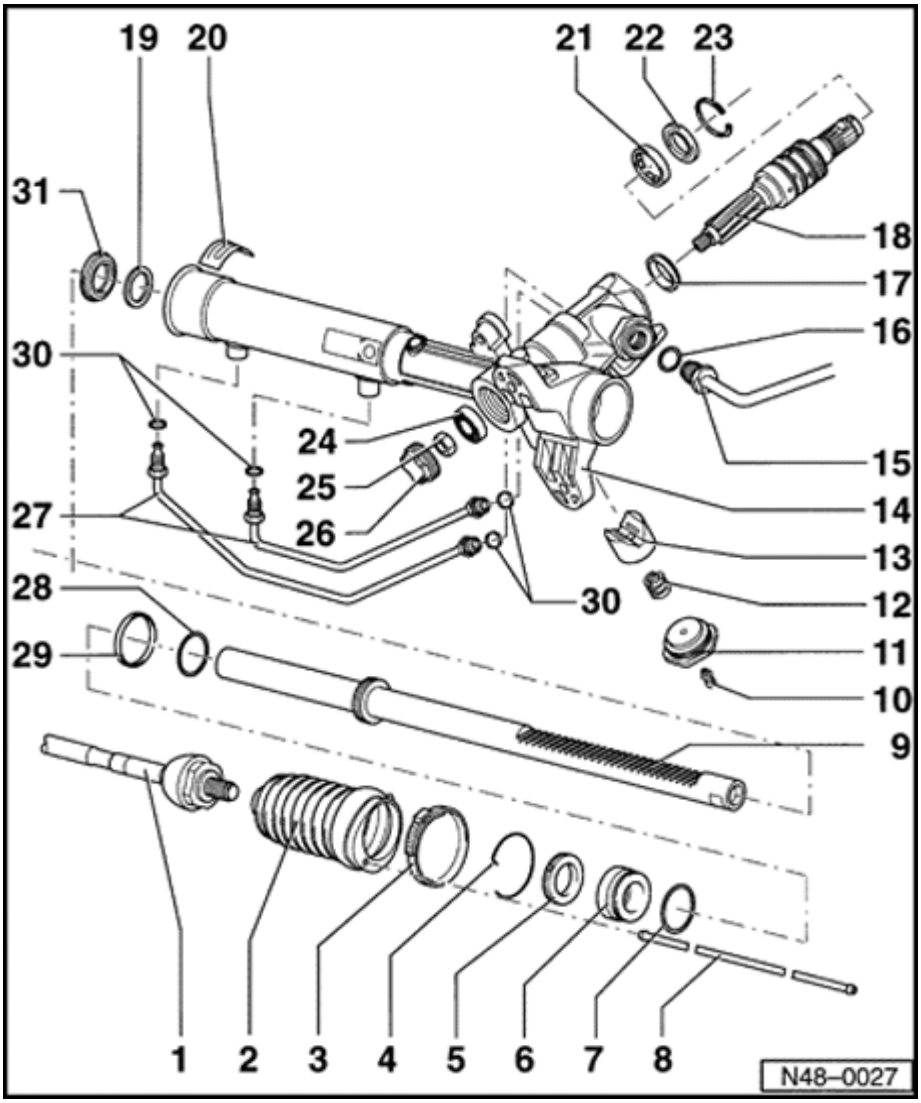

21 - Roller bearing

- installation position: inscription points up

22 - Sealing ring

- Always replace

23 - Circlip

24 - Ball bearing

- Drive from top downward with VW 439
- Grease with steering gear grease AOF 063 000 04

25 - Self-locking hex nut, 30 Nm (22 ft lb)

- Always replace

26 - Locking screw, 40 Nm (30 ft lb)

- Always replace
- Is already pre-mounted on new toothed rods that are supplied as replacement parts

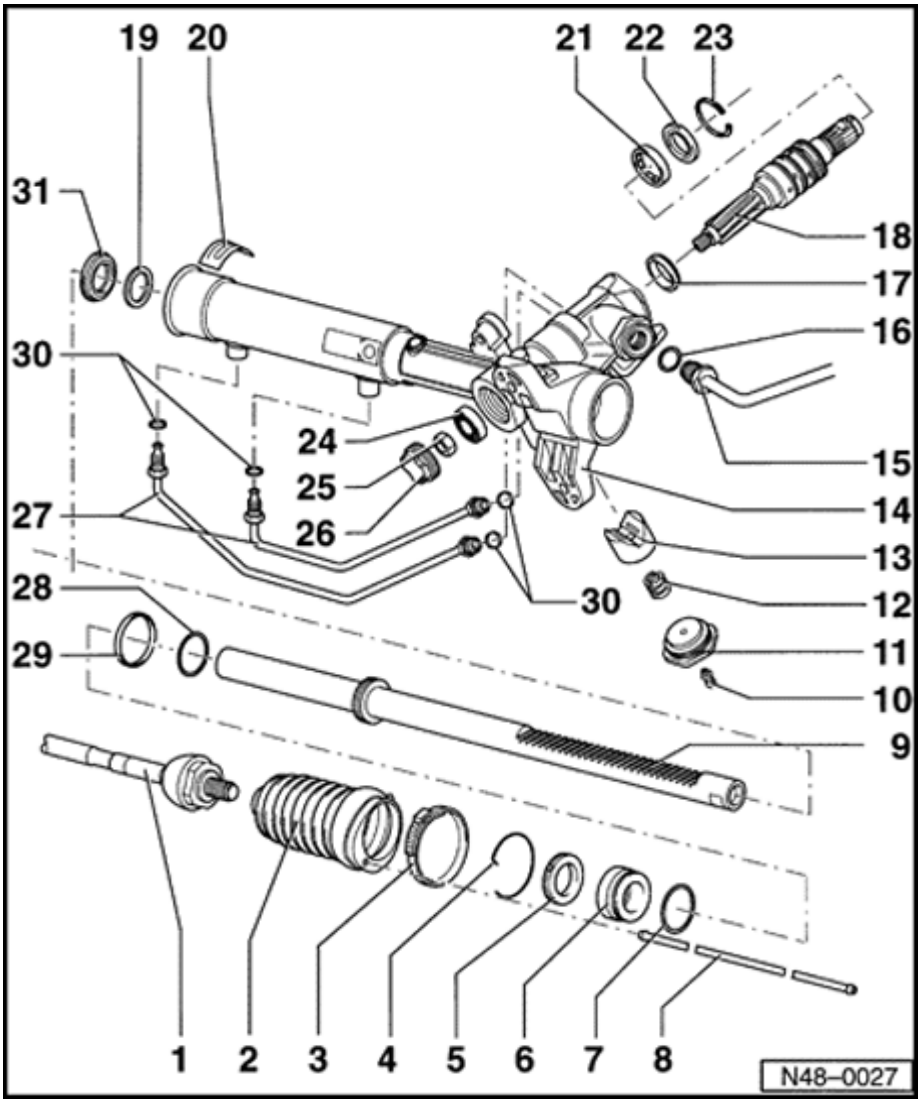

27 - Pipe

- Do not disconnect
- Not supplied as replacement part
- Sealing ring cannot be replaced

28 - O-ring

29 - Sealing ring

- Replace if there is scoring that can be seen or felt
- Already pre-mounted on new toothed rods that are supplied as replacement parts

30 - Sealing ring

- Not supplied as a replacement part

31 - Sealing ring

- Always replace

Power steering gear, disassembling

- Tie rods, removing - see tie rod, removing and installing (TRW and ZF power steering), ⇒ Page 48-77

- Close hose connections on power steering gear if not already done

1 - Plastic locking screw

2 - Plastic locking screw

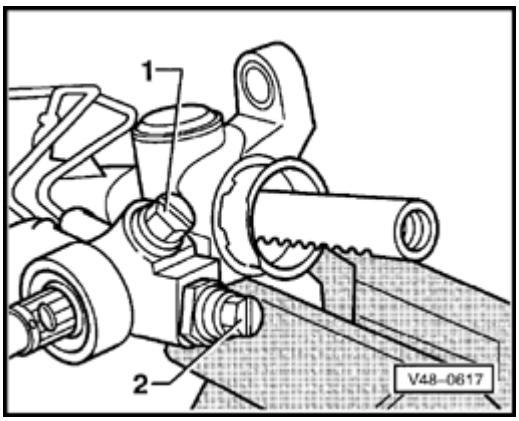

- Clean outside of power steering gear
- Open hose clamp and push back boot
- Clamp steering gear with toothed rod in vise and remove tie rod

Note:

Use jaw covers and check jaw covers for contamination e.g. metal chips or the like

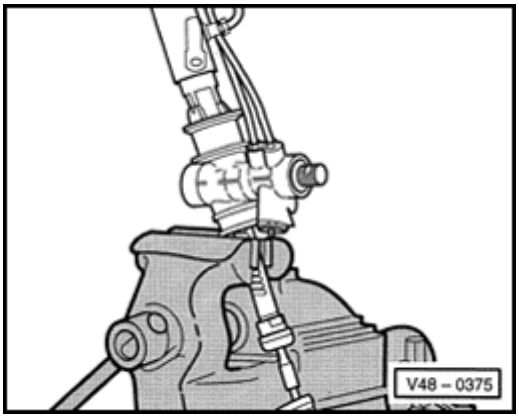

- Remove tie rod
- Take steering gear out of vise, screw on bracket 3315/1 and tighten bracket in vise

- Mark position of adjusting screw and lock nut to the housing (arrow)

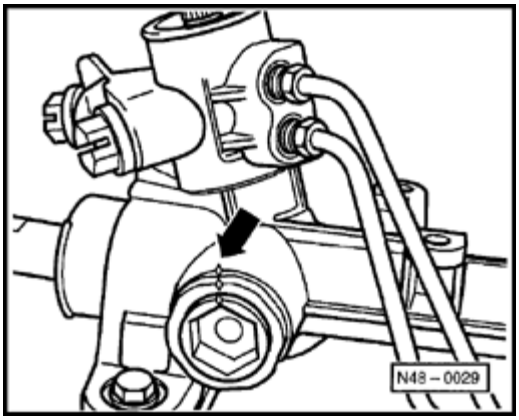

- Screw lock nut together with adjusting screw

Note:

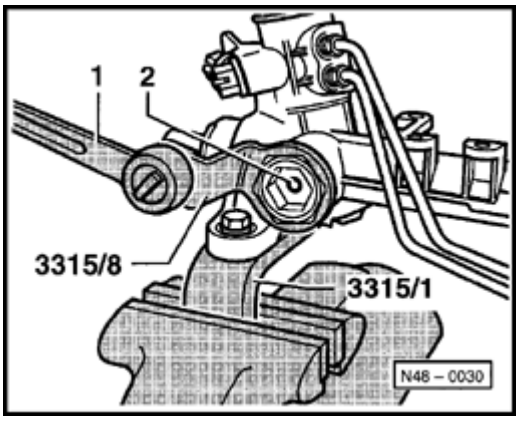

- *Do not change position of adjusting screw to lock nut when removing*
- *If necessary, remove adjusting screw together with lock nut using tool 3115/6*
- *Pressure piece/adjusting screw are slightly stressed with slight spring pressure*

1 - Ratchet (standard commercial)

2 - Adjusting screw

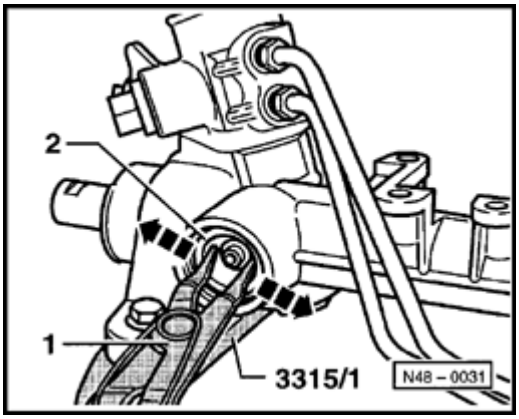

- Mark installation position of pressure piece and remove

1 - Spreading pliers (standard commercial)

2 - Pressure piece

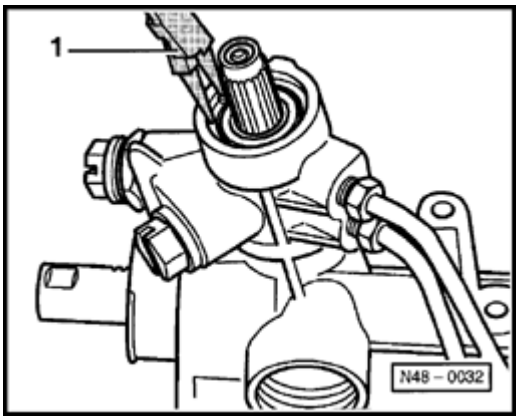

- Remove circlip for valve body

1 - Needle nose pliers (standard commercial)

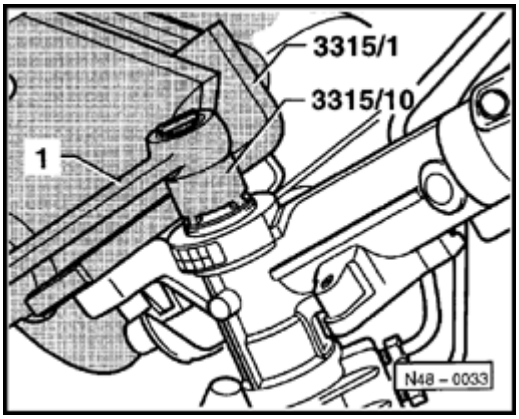

- Remove lower locking screw for valve body

1 - Ratchet (standard commercial)

If very tightly seated, loosen locking screw with a hammer and driver

- Remove hex nut below valve body

1 - Ratchet (standard commercial)

2 - Open-end wrench (standard commercial)

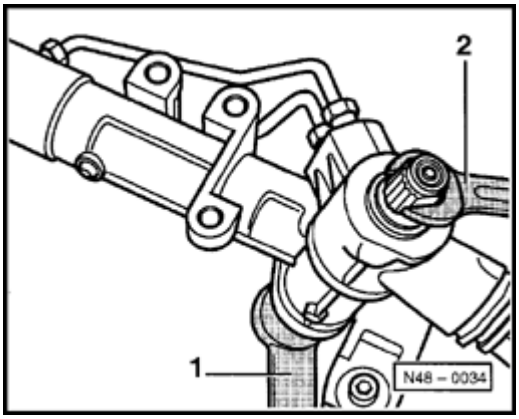

- Drive valve body upward from below with driver
- Remove grease from teeth of valve body

- Pull adhesive tape out of the housing

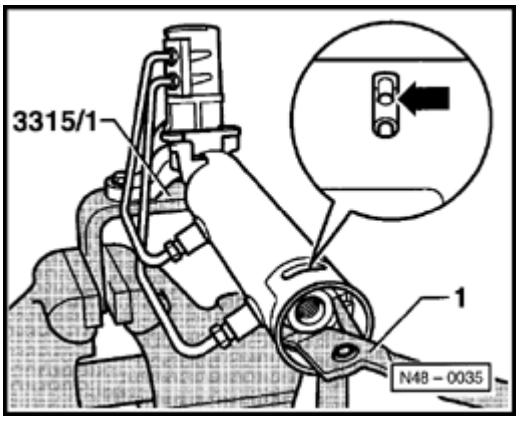

- Pull toothed rod all the way to the left
- Turn lock washer so that the opening of the circlip (arrow) is in the groove of the housing
- Continue to turn the lock washer (direction of rotation left or right) so that the circlip turns out of the housing
- Pull toothed rod with toothed rod guide out of the housing, pull off toothed rod guide and place toothed rod so that toothed rod piston sealing ring will not be damaged

1 - Needle nose pliers (standard commercial)

- Lubricate toothed rod

Valve body sealing ring, removing

- Drive sealing ring upward

A - Puller, e.g. Kukko 21/4

B - Driver

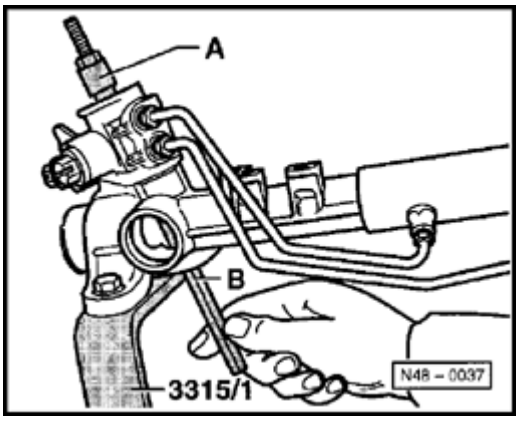

When installing the puller -A- make sure that the claws (arrow on illustration ⇒page 13) engage properly under the sealing ring. The puller must not be spread too wide because otherwise the seat for the sealing ring and housing will be damaged or the sealing ring can jam in the housing.

48-37

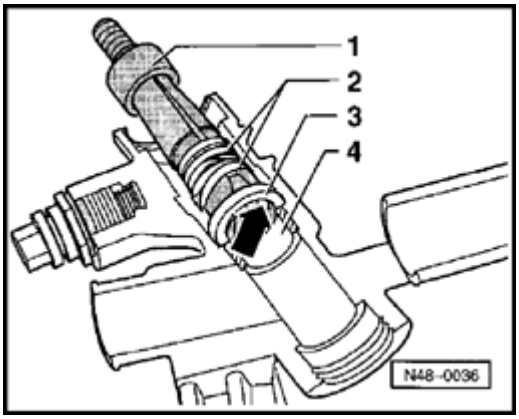

For easier installation of the puller, it is recommended that a rubber band be placed around the claws. Illustration shows the housing in cross section for better view

1 - Puller, e.g. Kukko 21/4

2 - Rubber band

3 - Sealing ring

4 - Glide bearing do not remove

Inner sealing ring for toothed rod, pulling out

- Install puller for sealing ring far enough so that the marking on the tool (arrow) matches the housing edge (only then will the claws engage behind the support ring)

- Spread claws -2- of the tool by turning the spindle forcefully

Note:

When introducing the tool, make sure that the cylinder race is not damaged

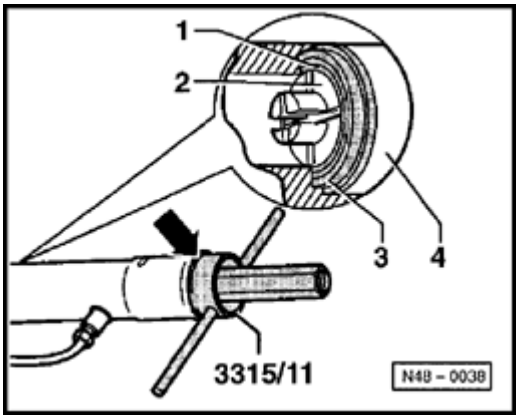

1 - Support ring

2 - Claws

3 - Sealing ring

4 - Tool 3315/11

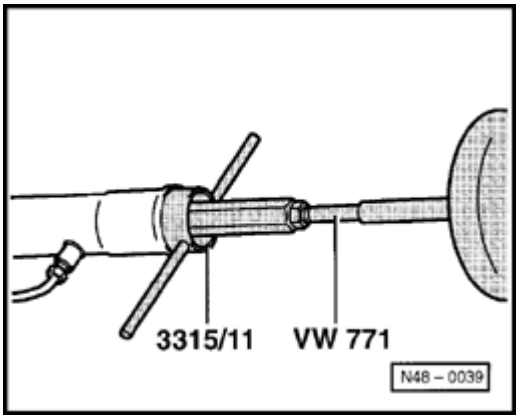

- Install tool VW 771 in the puller
- Pull out sealing ring

Parts, cleaning and checking

- Before assembly, the housing must be checked for contamination (paint residue, chips, dirt) and thoroughly cleaned with compressed air and alcohol
- Clean adhesive surface for adhesive tape in area of the slot with solvent (e.g. L160 or alcohol)
- Check cylinder race for scoring or other damage. If scoring can be felt, replace entire steering gear
- Clean toothed rod (remove old grease in the tooth pockets)

Checking toothed rod for scoring

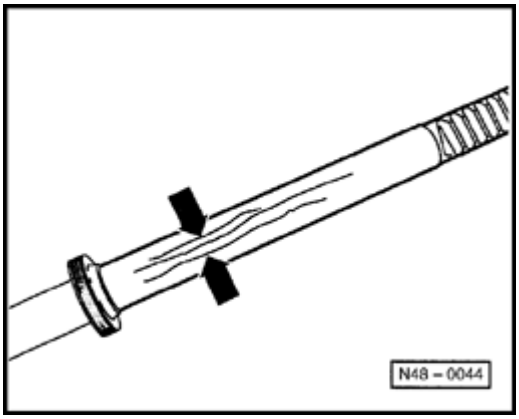

If corroded areas or deep scratches are not noticeable on the toothed rod, the toothed rod must be replaced

An evaluation of whether the toothed rod was damaged by force, e.g. by an accident, is not possible with this visual inspection

If slight scoring (arrows) can be seen/felt on the toothed rod that are only deep enough that they can be ground off with sand paper (grain 350-600) the toothed rod can still be used

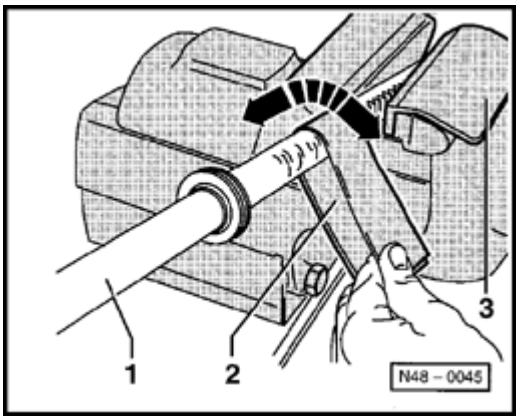

- Sand toothed rod with sandpaper in radial direction (this is only possible with slight scoring)
- Check chamfer on the front sides of the toothed rod for damage, if necessary remove with a fine grinding stone and/or sandpaper

1 - Toothed rod

2 - Sand paper (grain 350-600)

3 - Jaw covers

After sanding, lubricate toothed rod lightly

If the old toothed rod is used again, check the sealing ring for scoring (visual inspection). If there is scoring that can be seen or felt, the sealing ring and the O-ring under it must be replaced.

48-41

Sealing ring on toothed rod, replacing

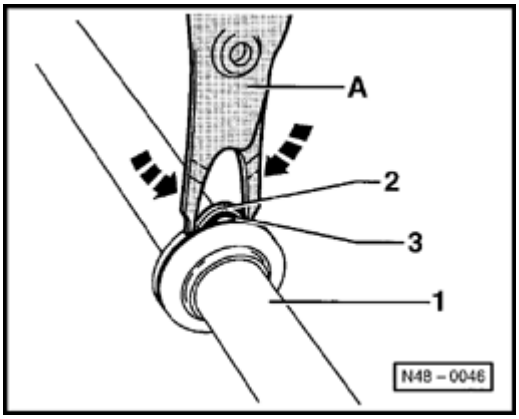

- Press pliers together with slight pressure on the sealing ring
- Pry out sealing ring and O-ring

A - Needle nose pliers (standard commercial)

1 - Toothed rod with piston

2 - Sealing rod

3 - O-ring

Sealing rings, installing on toothed rod piston

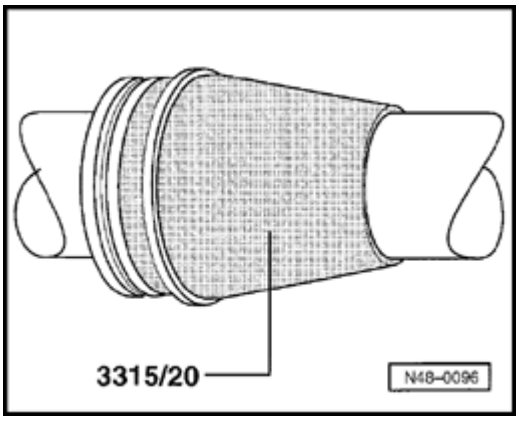

- Slide mounting sleeve on toothed rod
- Pull O-ring over tool and install in groove of piston
- Lubricate sealing ring with hydraulic oil, pull over tool and install in groove of piston

Power steering gear, assembling

Note;

All sealing rings should be lubricated with hydraulic oil before installing.

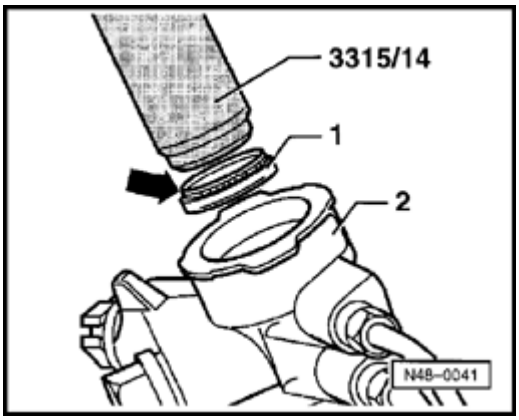

- Check whether the valve body housing -2- is absolutely clean on the inside, otherwise clean
- Place sealing ring -1- on tool. The sealing lip -arrow- points toward tool
- Drive sealing ring into stop

1 - Sealing ring

2 - Valve body housing

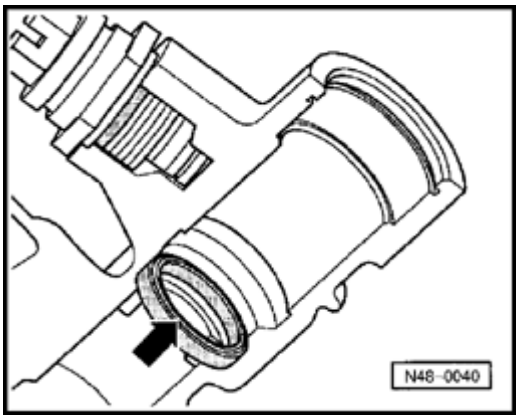

- Make sure correct installation position of sealing ring in valve body
- For better view, illustration shows valve tower in cross section

Inner sealing ring for toothed rod, installing

- Place sealing ring on tool

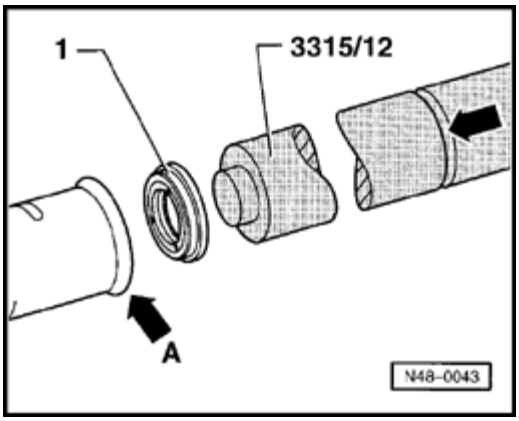

- Ensure correct installation position of sealing ring for toothed rod
- Drive sealing ring -1- into the cylinder pipe far enough so that the groove (arrow) on the tool matches the edge (arrow A) of the housing

1 - Sealing ring

A - Edge of housing

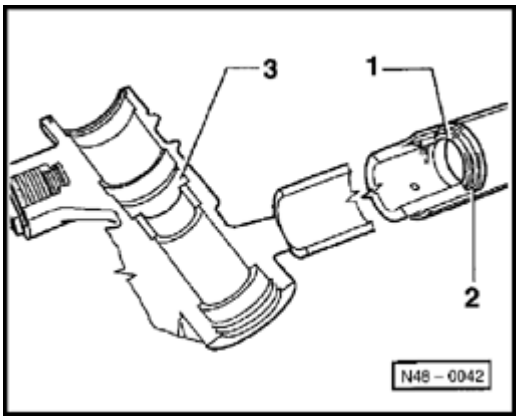

For better view, illustration shows housing in cross section

1 - Support ring

2 - Sealing ring

3 - Valve body housing

48-45

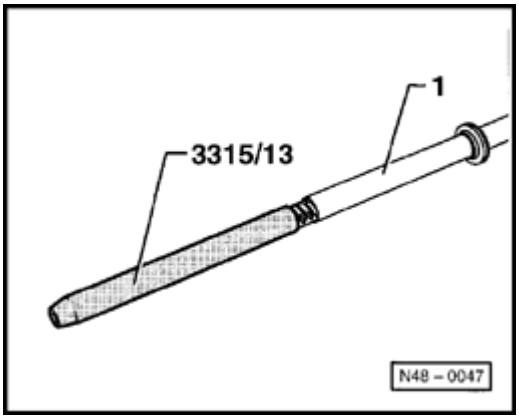

Toothed rod, installing in housing

- Grease teeth of toothed rod with AOF 063 000 04 grease
- Slide protective tube on to toothed rod to stop
- Wipe excess grease off completely

No grease must get into the oil circulation system!

- Coat piston of toothed rod and protective tube with hydraulic oil

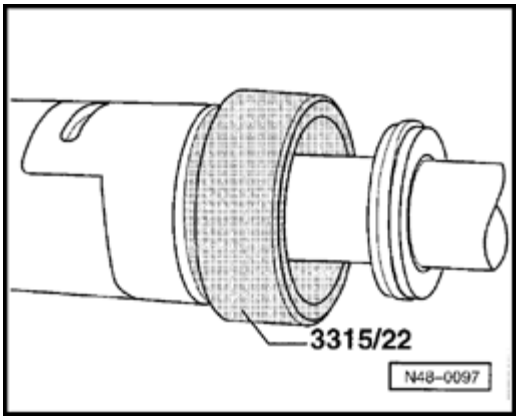

- Install installation sleeve 3315/22 into the housing
- Slide toothed rod into the housing

When sliding, make sure that the sealing ring is pressed into the groove of the piston without jamming

- Slowly introduce the toothed rod into the housing
- Pull protective tube 3315/13 off the toothed rod

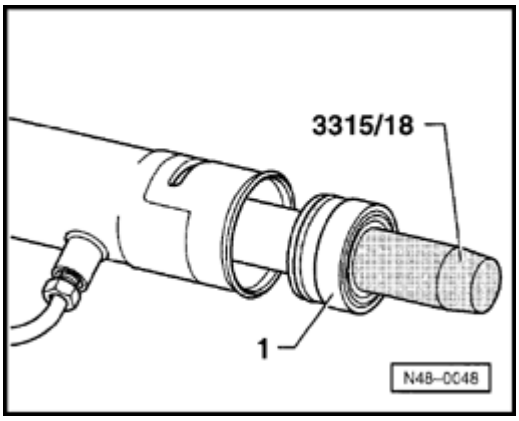

Align teeth of toothed rod in such a way that they point toward the teeth of the pinion

- Screw mounting sleeve 3315/18 on toothed rod and coat with hydraulic oil
- Carefully slide toothed rod guide 1 over the toothed rod into the housing to stop
- Slide toothed rod completely into the housing.

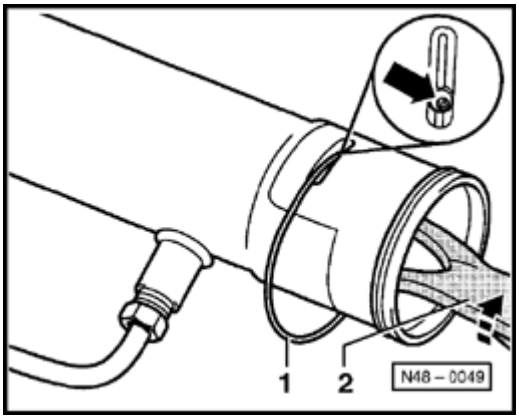

- Place lock washer in the housing and press in far enough until the groove in the lock washer in the slot of the housing is visible
- Install new safety wire in the hole of the lock washer (arrow)
- Pull safety wire in by turning the lock washer. (after pulling in, turn the lock washer approx. 1/2 revolution further)

1 - Safety wire in repair kit is not formed as a ring, but supplied as a straight wire

2 - Pliers (standard commercial)

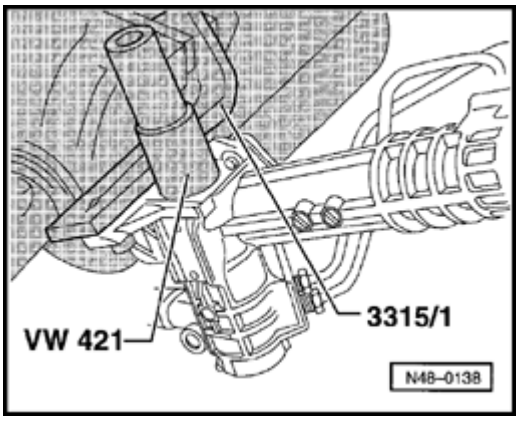

Valve body, installing

- Carefully drive lower ball bearing for valve body into stop

Ball bearing must not be tipped when driving in

48-48

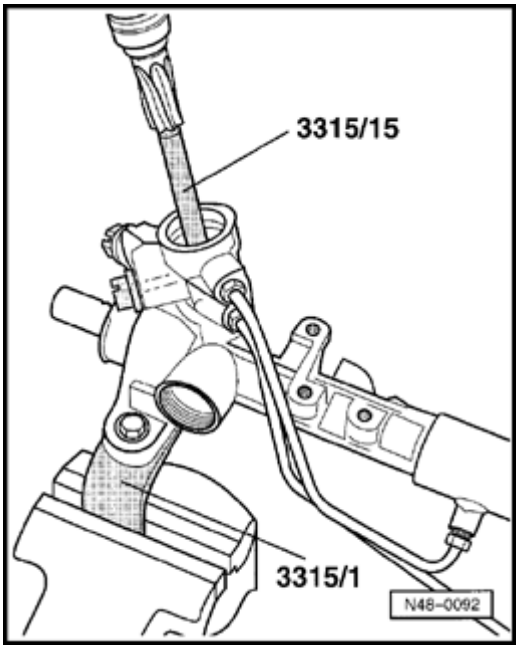

- Screw assembly mandrel 3315/17 on valve body
- Lubricate valve body with hydraulic oil and carefully install by hand into the valve body housing (note position of toothed rod)

Make sure that the sealing ring in the housing is not damaged by the teeth of the pinion

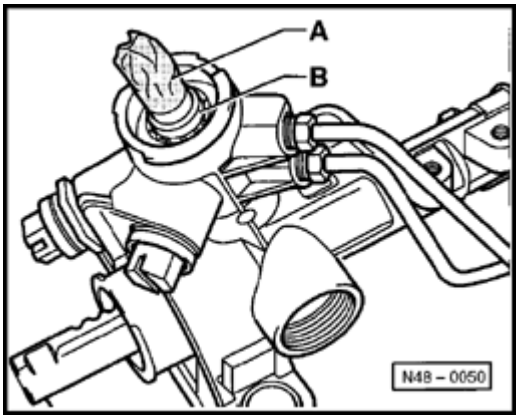

- Tape teeth of valve body with adhesive tape to protect the sealing ring. Avoid wrinkles.
- Install upper roller bearing for valve body (inscription on roller bearing points upward)

A - Adhesive tape

B - Valve body

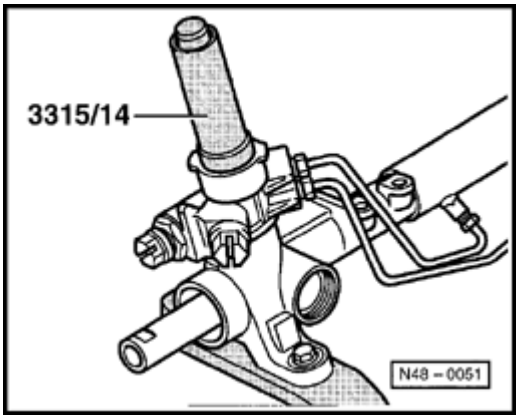

- Drive sealing ring in far enough sot that the groove for circlip in the housing is visible
- Install circlip
- Remove adhesive tape
- Remove assembly mandrel 3315/17
- Install hex nut for valve body and tighten, 30 Nm (22 ft lb) with torque wrench SW 14 2

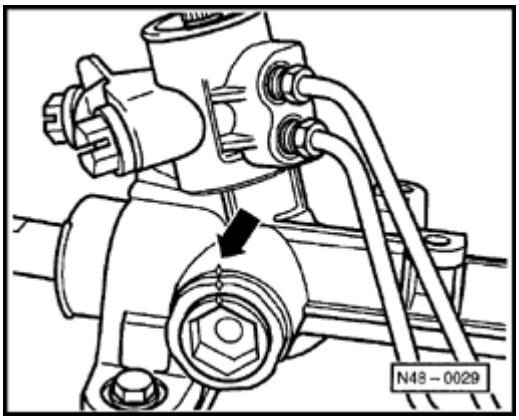

- Install locking screw
- Grease pressure piece and spring in housing in old position
- Install lock nut together with adjusting screw

Note:

- *After tightening, the marking made during removal (arrow) on the adjusting nut and lock nut must match*
- *If the toothed rod was replaced, before installing the tie rods the steering gear must be readjusted*

48-50

Adhesive tape, applying

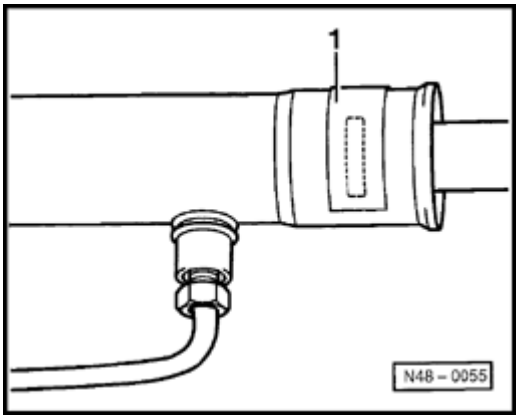

- Fill slot with sealing compound AKL 450 005 05
- Tape slot with adhesive tape 1
- Adhesive surface must be dry and free from grease

Power steering gear, adjusting with new toothed rod

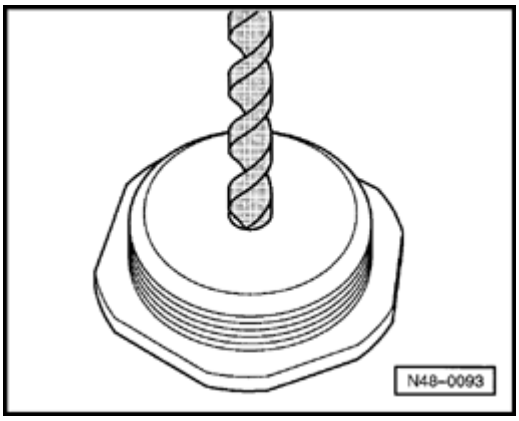

If a new toothed rod was used, the steering play should be adjusted according to the following description.

- Drill a hole 5.1 mm in diameter in the center of the adjusting screw (on the back side center)
- Thoroughly clean adjusting screw
- Place toothed rod in center position (measure toothed rod excess right and left)
- Install pressure piece and spring in housing if not done yet
- Screw adjusting screw and lock nut far enough into the housing so that the markings match

48-52

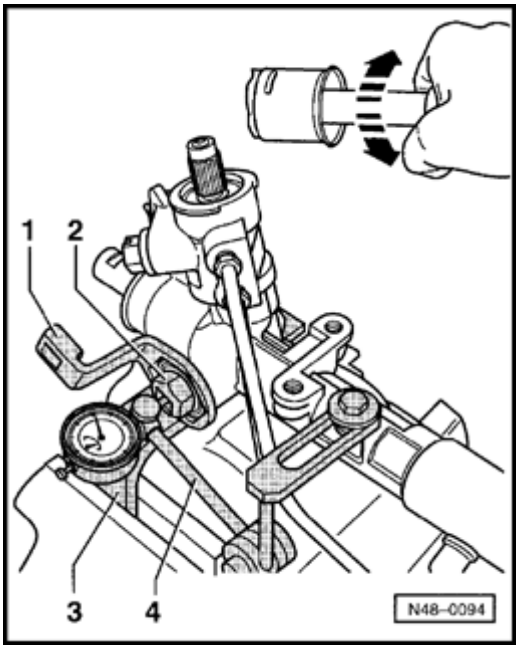

- Install gauge and set to "O" with approx. 1 mm pre-load (make sure that the key does not stick, front of key must not be crowned)

1 - 3315/8

2 - 3315/9

3 - 3315/1

4 - VW 387

- Screw right rod onto toothed rod and tighten by hand
- Turn toothed rod radially from stop to stop, during this process observe pointer on gauge.

Needle run-out max. 0.10 mm

If needle run-out is greater than 0.10 mm, screw pressure piece slightly into housing

If the needle run-out is less than 0.10 mm, screw pressure piece slightly out of housing

- Tighten lock nut
- Check needle run-out again, if necessary repeat adjustment
- Remove gauge

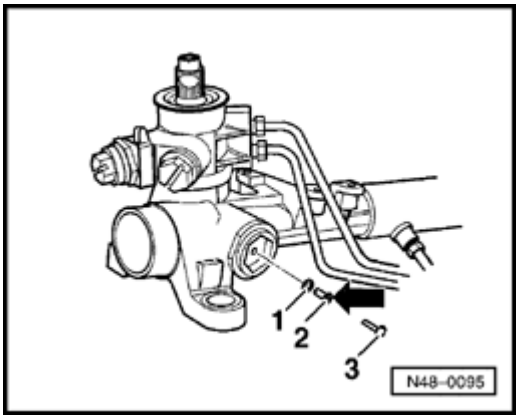

Close hole in adjusting screw with a stopper from repair kit

- First install clip -2- with gasket -1- in the hole
- Apply 1 drop sealing compound, Part No. AMV 188 001 02, in the hole of the clip -arrow- and press plug -3- into the clip

Tie rods, installing

- See tie rods, removing and installing (TRW and ZF steering gear), ⇒ Page 48-77

Assembly overview: power steering gear (F)

It is not intended that repair work be carried out on the power steering gear. If complaints are received determine cause with the help of pressure tests, leakage test and troubleshooting programs. If a malfunction exists replace the power steering gear.

Note:

- *Always replace self-locking nuts and bolts.*
- *Welding and straightening work on steering components is not permitted.*
- *To grease the rack use only steering gear grease, Part No. AOF 063 000 04.*
- *Type of oil: Hydraulic oil G 002 000*
- *Oil system capacity: 0.7 - 0.9 ltr. (0.74 - 0.95 qt)*
- *Supply and pressure line routing* ⇒ *Page 48-85* .

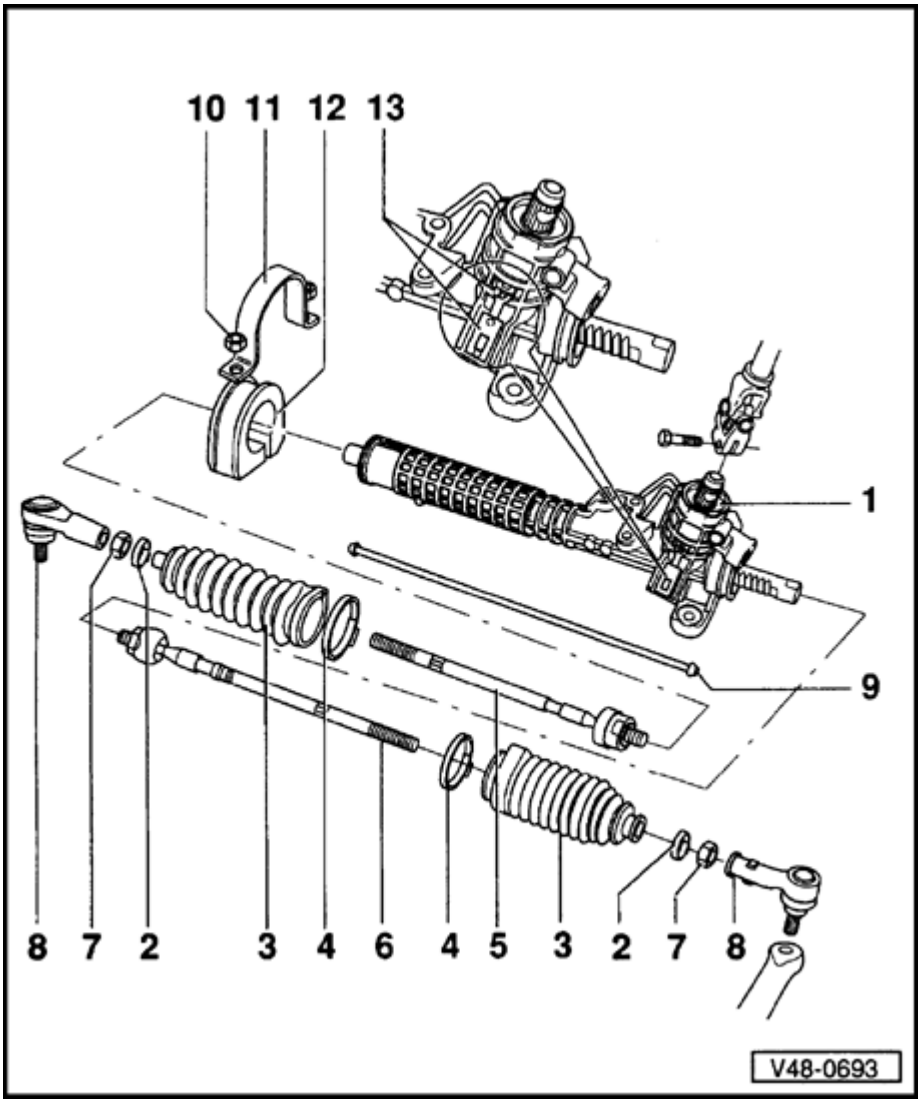

1 - Power steering gear

- Removing and installing ⇒ Page 48-15
- Adjusting ⇒ Page 48-59
- Checking steering moment
- Steering gear with reduced steering moment only permissible for vehicles up to 85 kW
- Steering moment on 16 V and VR 6 vehicles is approx. 2 Nm higher

2 - Hose clip

- Always replace- use pliers to open
- Tensioning ⇒ Page 48-81

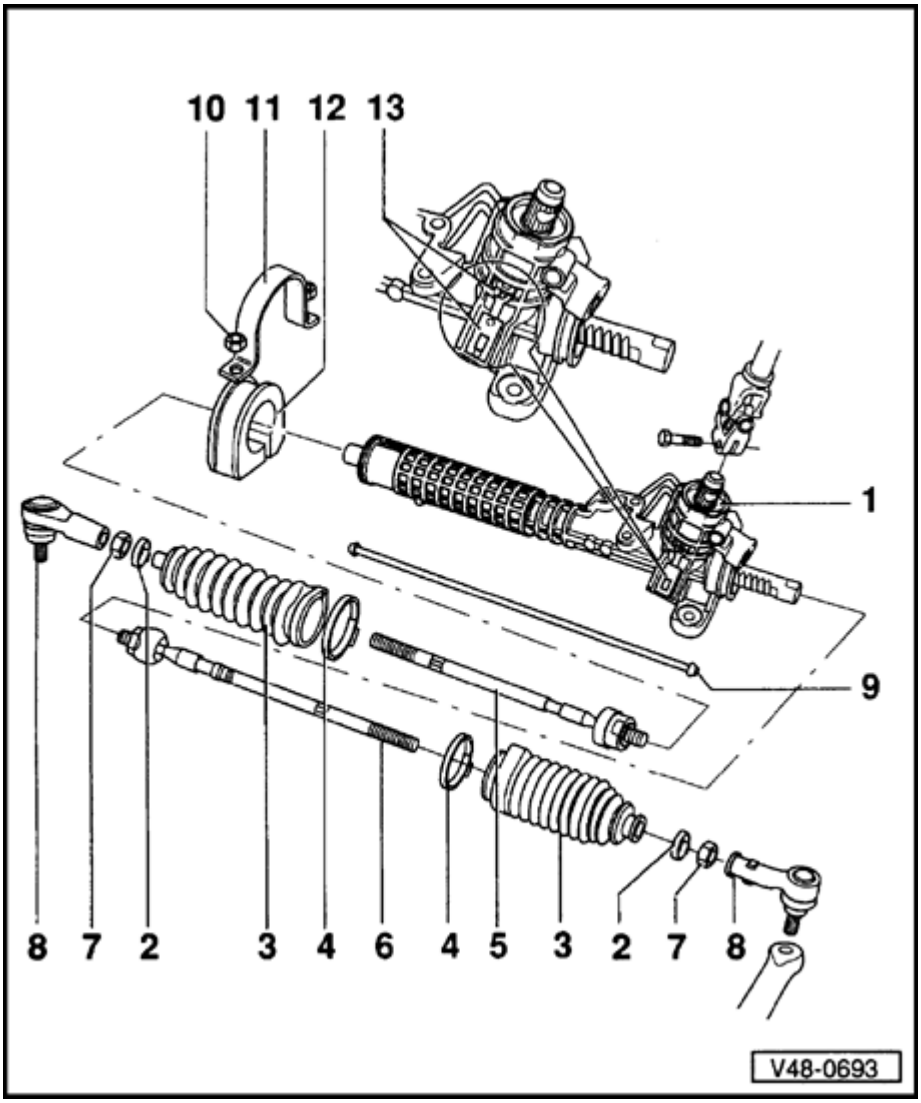

3 - Boot

- Remove ball joint before removing
- Check for wear (cuts, cracks), ensure sealing surfaces and sealing lips are clean and undamaged
- The end diameters are larger than the boot for TRW power steering gears
- Must not be installed on TRW power steering gear

4 - Hose clip

- Always replace - use pliers to open
- Tensioning ⇒ Page 48-81
- Must not be installed on a TRW power steering gear

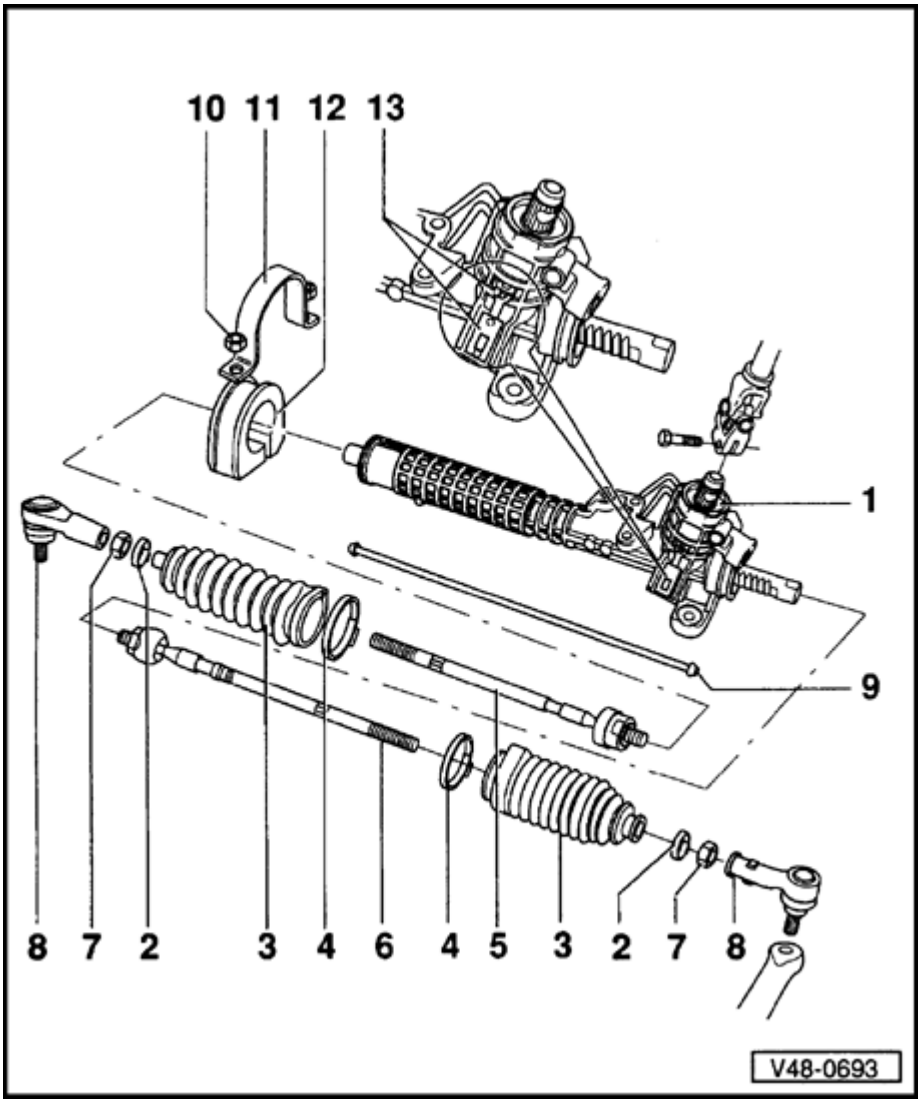

5 - Right-hand tie rod

- Removing and installing ⇒ Page 48-77
- Vehicle alignment ⇒ Page 44-1
- Tie rod boot seat diameter ZF: 15 mm TRW: 12.7 mm
- Must not be installed on a TRW power steering gear

6 - Left-hand tie rod

- Removing and installing ⇒ Page 48-77
- Tie rod boot seat diameter ZF: 15 mm TRW: 12.7 mm
- Must not be installed on a TRW power steering gear
- Adjusting length ⇒ Page 48-84

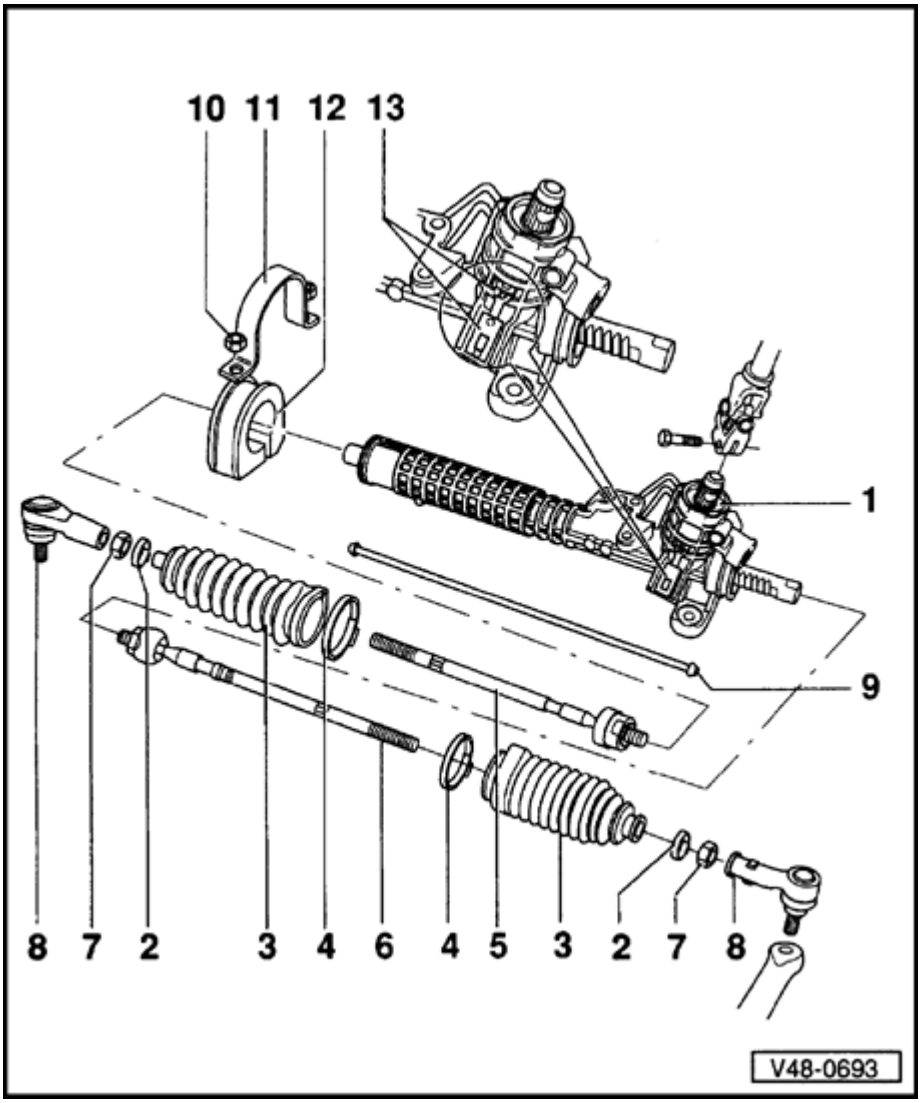

7 - Lock nut, 50 Nm (37 ft lb)

8 - Tie rod ball joint

- Splitting ⇒ Page 48-16
- Checking:

⇒ *Repair Manual, Maintenance*

9 - Pressure balance pipe

10 - 30 Nm (22 ft lb)

11 - Clamp

12 - Rubber mounting

- Internal diameter ZF: 50 mm TRW: 44 mm

13 - Data plate and company initials

Power steering gear, adjusting (F)

Note:

Two mechanics are required when adjusting.
Adjust with engine switched off.

- Raise vehicle on hoist.

- Wheels in straight-ahead position.

- By turning the steering wheel to and fro (about 30° to center axis) a knocking noise will be heard if there is excessive play.

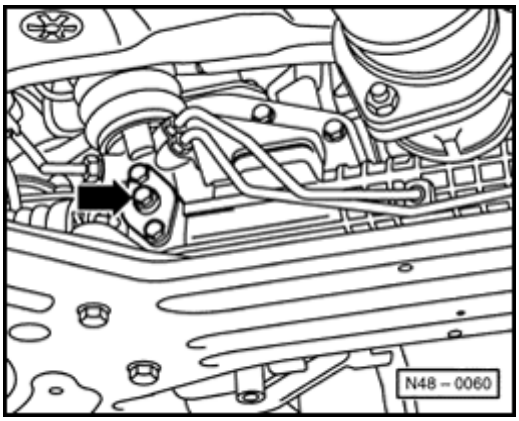

- The second mechanic carefully screws the adjustment screw -arrow- into the cover until the knocking noise can no longer be heard inside the vehicle.
- Complete a road test ensuring that when maneuvering or negotiating corners the steering self-centers without sticking.

Power steering gear, disassembling and reassembling (F)

This repair is limited to replacing the sealing rings and, if necessary, the toothed rod. Steering gears that are damaged by an accident must be replaced

For a satisfactory and successful repair, the greatest care, safety and proper tools are required.

Note:

- *Clean hose connections and their surroundings thoroughly before opening*
- *Thoroughly clean work place (workbench, vise) before starting work if necessary place paper towels on the working surface*
- *Place parts that have been removed on a clean surface.*
- *If the repair will not be carried out immediately, cover parts*
- *Do not use cloths with lint*
- *All the replacement parts that are needed are contained in the repair kit*
- *Only take replacement parts out of the package right before installing. Use only parts in original packaging*
- *Always install all of the parts in the repair kit*

Power steering gear, disassembling

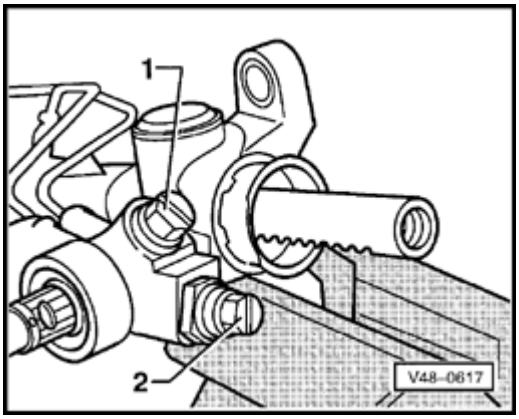

- Tie rods, removing - see tie rod, removing and installing (TRW and ZF power steering), ⇒ Page 48-34
- Close hose connections on power steering gear if not already done

1 - Plastic locking screw

2 - Plastic locking screw

- Clean outside of power steering gear
- Open hose clamp and push back boot
- Clamp steering gear with toothed rod in vise and remove tie rod

Note:

Use jaw covers, check jaw covers for contamination e.g. metal chips or the like

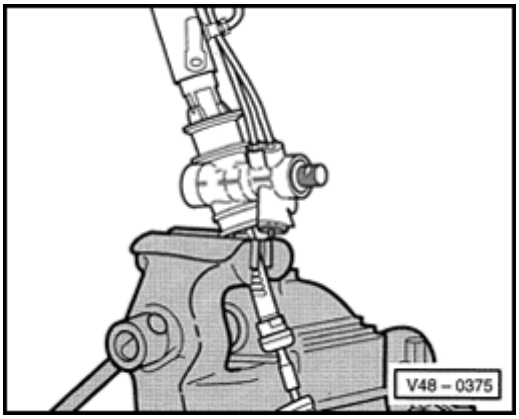

- Remove tie rod
- Take steering gear out of vise, screw on bracket 3315/1 and tighten bracket in vise
- Remove cover

Note:

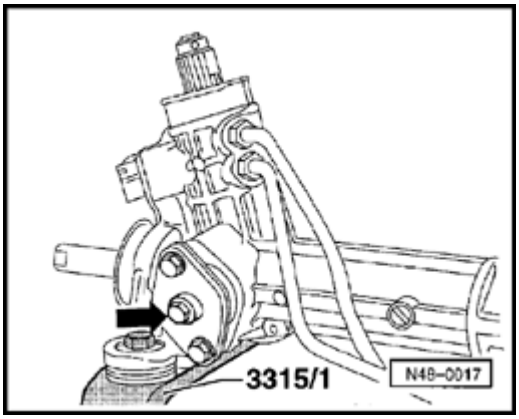

- *Do not change position of the adjusting screw (arrow)*
- *Cover is stressed with slight spring pressure*

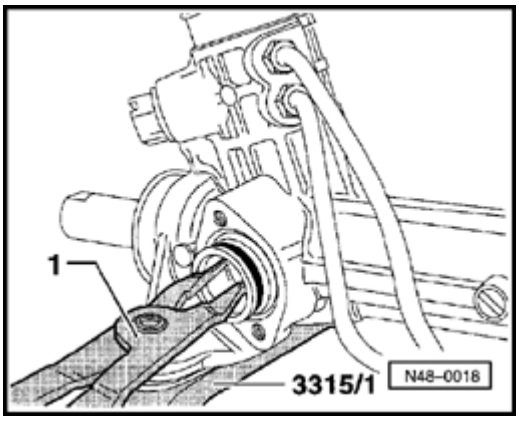

- Remove pressure piece

1 - Spreading pliers (standard commercial)

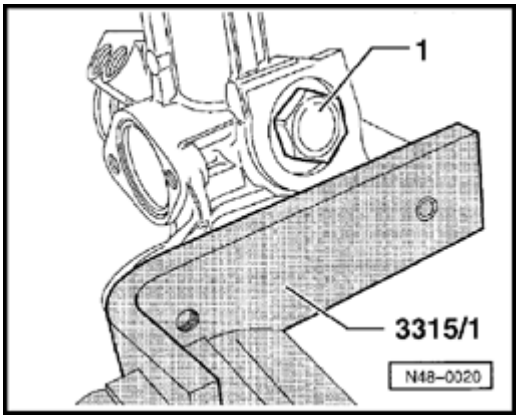

- Remove lower locking screw for valve body

1 - Locking screw

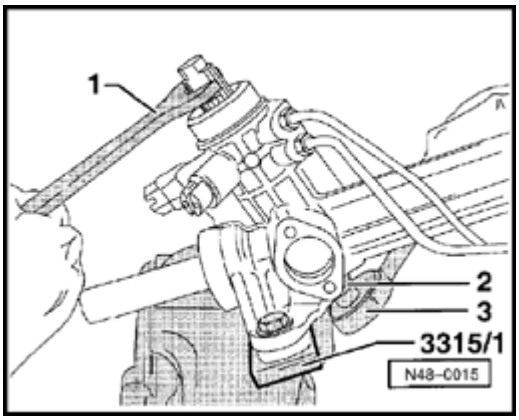

- Remove Torx screw for valve body

1 - Open-end wrench (standard commercial SW 14)

2 - Torx insert (standard commercial E10)

3 - Ratchet (standard commercial 3/8")

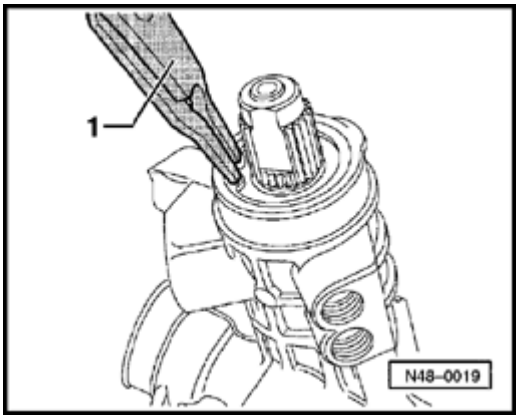

- Remove circlip for valve body with needle nose pliers 1
- Drive valve body out from below with driver

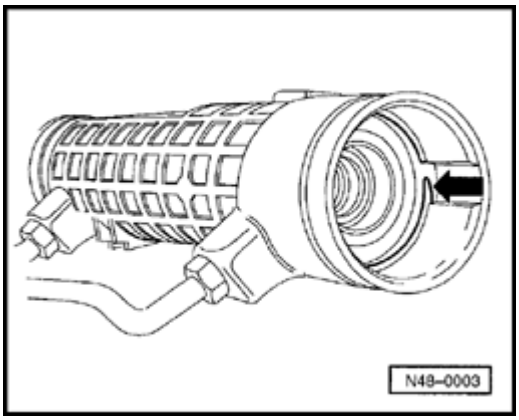

- Slide toothed rod all the way in the direction of the valve body
- Turn circlip so that the pointed end of the circlip is in the groove (arrow) of the housing

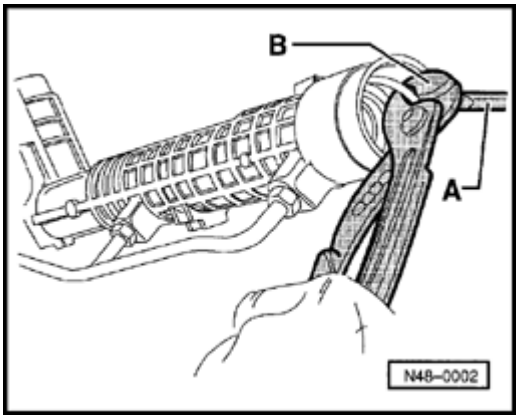

- First lift circlip with slotted screwdriver then pull out with pliers
- Before removing toothed rod, clean housing opening with compressed air
- Remove dirt and any chips that may be present
- Pull toothed rod out of the housing to the right with toothed rod guide

A - Screwdriver

B - Pliers (standard commercial)

- Lubricate toothed rod

Center roller bearing for valve body, removing

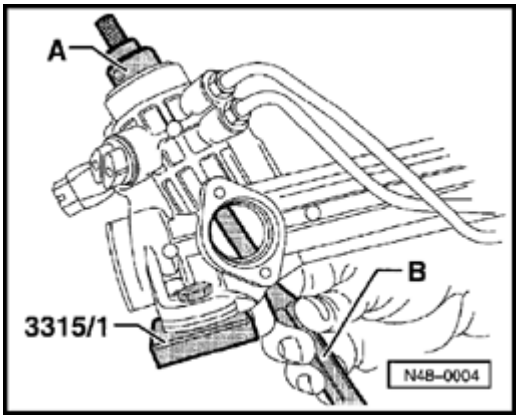

- Drive center roller bearing out toward the top

A - Puller, e,g, Kukko 21/4

B - Driver

When installing the puller A, make sure that the claws (arrows on fig. N48-0058, ⇒ page 45) engage correctly under the sealing ring. The puller must not be spread too wide because otherwise the seat for the sealing ring and the housing will be damaged or the sealing ring can jam in the housing.

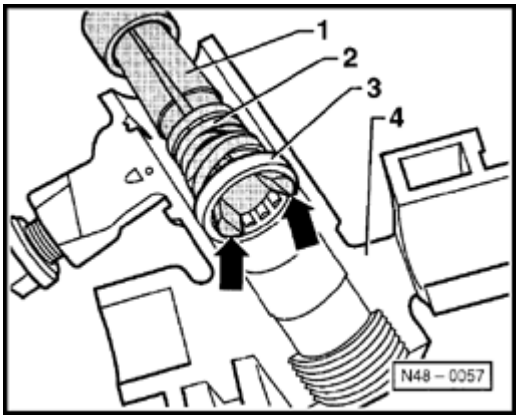

For easier installation of the puller, it is recommended that a rubber band be placed around the jaws. Illustration shows the housing in cross section for better view.

1 - Puller e.g. Kukko 21/4

2 - Rubber band

3 - Sealing ring

4 - Housing

Sealing ring for valve body, removing

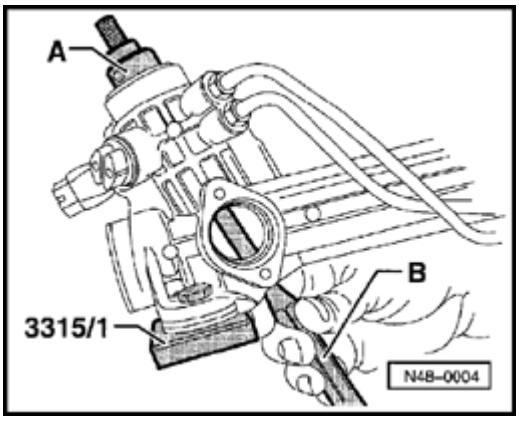

- Drive sealing ring out toward the top

A - Puller, e.g. Kukko 21/4

B - Driver

When installing the puller A, make sure that the claws (arrows on fig. N48-0058, ⇒page 46) engage correctly under the sealing ring. The puller must not be spread too wide because otherwise the seat for the sealing ring and the housing will be damaged or the sealing ring can jam in the housing.

- Drive out lower ball bearing with VW 439

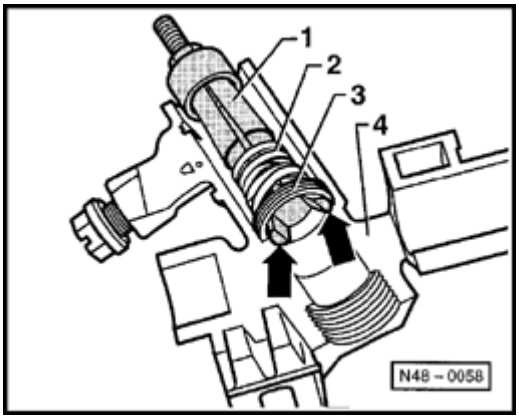

For easier installation of the puller, it is recommended that a rubber band be placed around the jaws. Illustration shows the housing in cross section for better view.

1 - Puller, e.g. Kukko 21/4

2 - Rubber band

3 - Roller bearing

4 - Housing

Inner sealing ring for toothed rod, removing

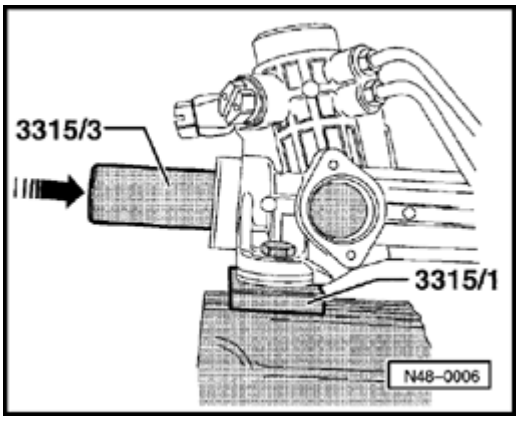

- Remove sealing ring for toothed rod from the housing
- Disconnect hose line from valve body housing to cylinder line
- Clean hose line, housing. Check threaded connection for contamination (rubber residue, chips)

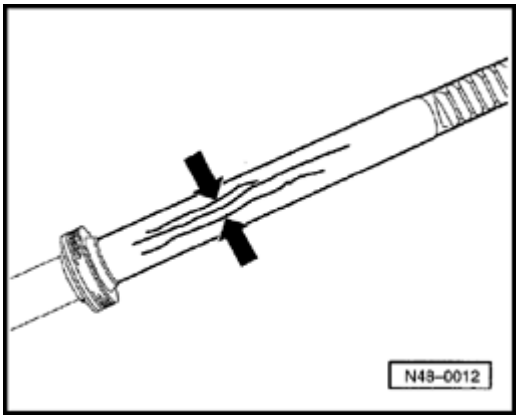

Parts, cleaning and checking

- Before assembly, the housing must be checked for contamination (paint residue, chips, dirt) and clean thoroughly with compressed air and alcohol if necessary
- Check cylinder race for scoring or other damage. If scoring can be felt, replace the complete steering gear
- Clean toothed rod (remove old grease in tooth pockets)

Checking toothed rod for scoring

If corroded areas or deep scratches are noticeable on the toothed rod, the toothed rod must be replaced

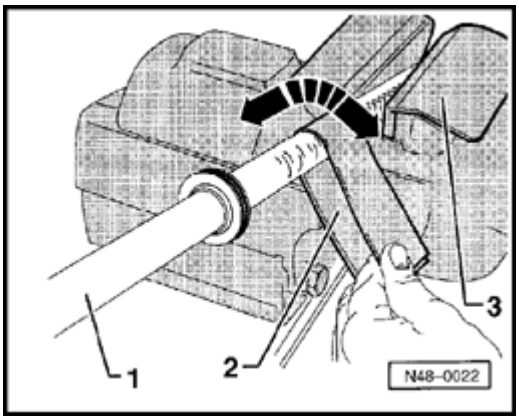

An evaluation of whether the toothed rod was damaged by force, e.g. by an accident, is not possible with this visual inspection

- Sand toothed rod with sand paper in radial direction (this is only possible with slight scoring)
- Check chamfer on the front sides of the toothed rod for damage, if necessary remove with fine grinding stone and/or sandpaper

1 - Toothed rod

2 - Sand paper (grain 350-600)

After sanding, lubricate toothed rod lightly

If the old toothed rod is used again, check the sealing ring for scoring (visual inspection). If there is scoring that can be seen or felt, the sealing ring and the O-ring under it must be replaced.

Sealing ring on toothed rod, replacing

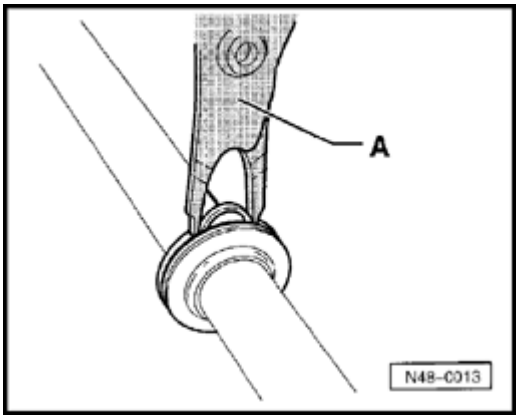

When the sealing rod is replaced it must be replaced with a new one of the same color

- Press pliers together with slight pressure on the sealing ring
- Pry out sealing ring and O-ring

A - Needle nose pliers (standard commercial)

Note the matching of the O-ring to the sealing ring

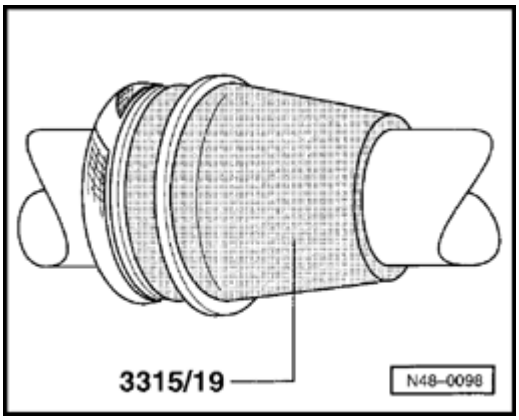

- O-ring 30.0 x 1.78/ white sealing ring
- O-ring 31.0 x 1.5/black sealing ring

- Slide mounting sleeve 3315/19 onto toothed rod
- Pull O-ring over the tool and insert in the groove of the piston

Power steering gear, assembling

Note:

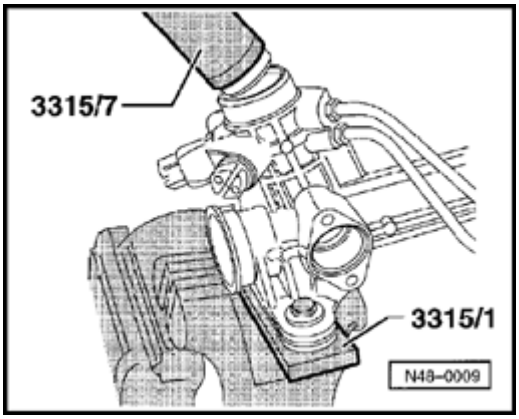

- *Lubricate the sealing rings with hydraulic oil before installing*

- Note correct installation position of the sealing ring

The sealing lip (arrow) of the sealing ring points upward toward the teeth 1 on the valve body

For better viewing, the illustration shows the body housing in cross section with installed valve body. The valve body is shown slightly raised for better viewing

- Place sealing ring for valve body on the tool and drive in to stop. For installation position, see next illustration
- Drive center roller bearing for valve body into stop

Inner sealing rod for toothed rod, installing

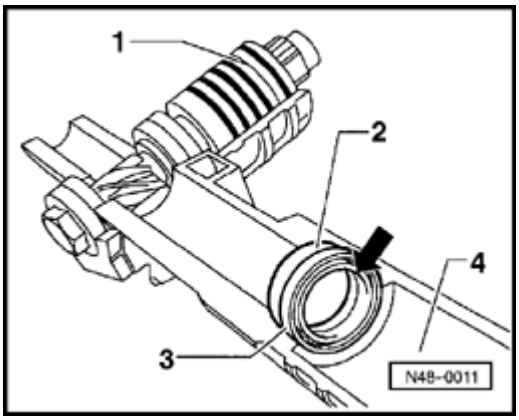

The sealing lip (arrow) of sealing ring -3- points toward cylinder -4-.

1 - Valve body

2 - Support ring

3 - Sealing ring

4 - Cylinder

For better illustration, the drawing shows the housing in cross section.

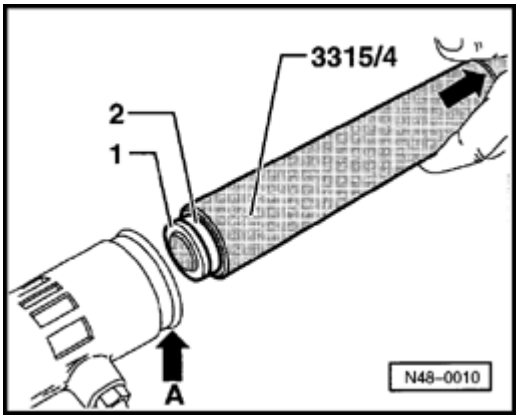

- Place support ring -1- and sealing ring -2- on tool
- Drive sealing ring for toothed rod into housing to stop

When the groove -arrow- matches the edge -arrow -A- of the housing, the sealing ring is properly seated.

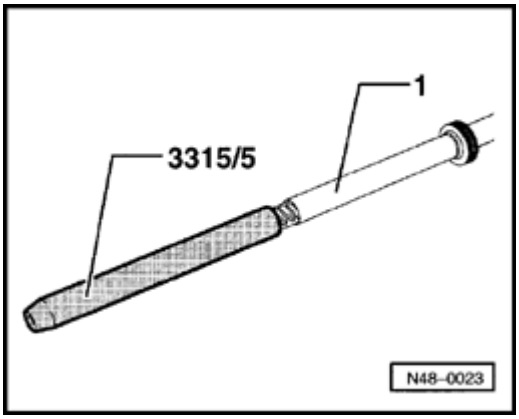

Toothed rod, installing in the housing

- Grease teeth of toothed rod with AOF 063 000 04 grease
- Slide protective tube over toothed rod to stop
- Wipe away excess grease completely

No grease must get into the oil circulation system!

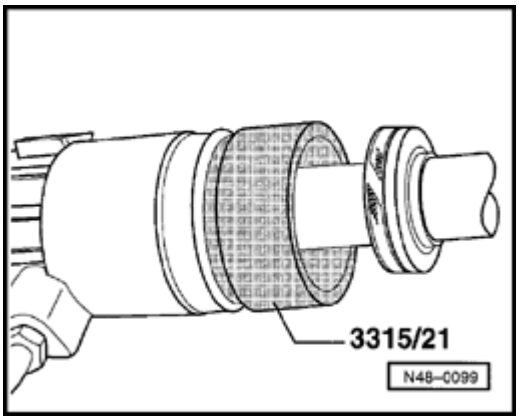

- Coat piston of toothed rod and protective tube with hydraulic oil
- Install installation sleeve 3315/21 into the housing
- Slide toothed rod into the housing

When sliding, make sure that the sealing ring is pressed into the groove of the piston without jamming

- Slowly introduce the toothed rod into the housing
- Pull protective tube 3315/5 off the toothed rod

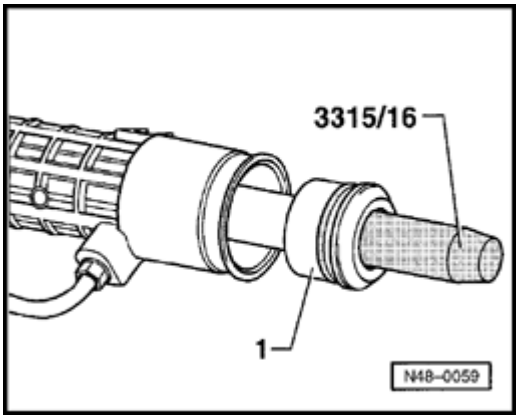

- Align teeth of toothed rod in such a way that they point toward the teeth of the pinion
- Screw mounting sleeve 3315/16 on toothed rod and coat with hydraulic oil
- Carefully slide toothed rod guide -1- over the toothed rod into the housing to stop
- Slide toothed rod completely into housing if not done yet

1 - toothed rod guide

- Install circlip in such a way that the opening of the ring is opposite the groove in the housing

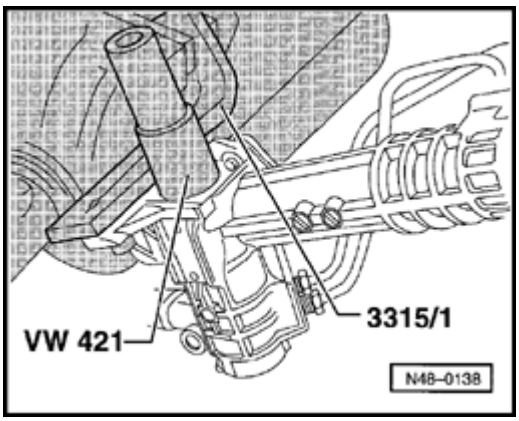

Valve body, installing

- Drive roller bearing in to stop with VW 421

Roller bearing must not be tipped when driving in

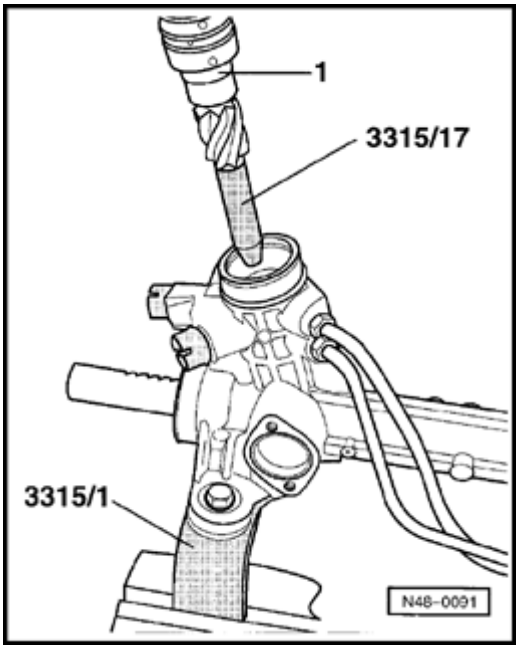

- Thread assembly mandrel 3315/17 onto valve body.
- Lubricate valve body with hydraulic oil and carefully install by hand into the valve body housing (note position of toothed rod).

Make sure that the sealing ring in the housing is not damaged by the teeth of the pinion.

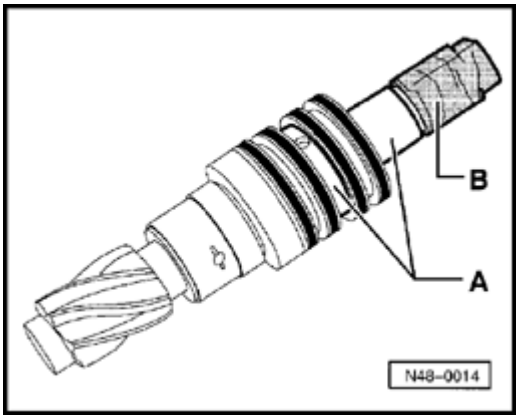

- Tape the valve body with adhesive tape.

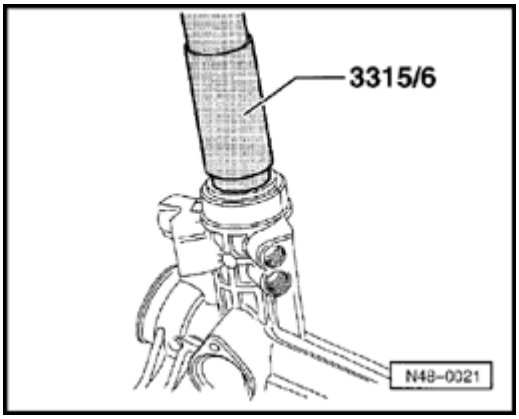

- Carefully slide bushing with roller bearing onto the valve body.
- Drive bushing into the housing far enough so that the groove for the circlip is visible.
- Install circlip.
- Remove adhesive tape.
- Remove installation mandrel 3315/17.
- Install Torx screw into valve body and tighten to 35 Nm (26 ft lb).

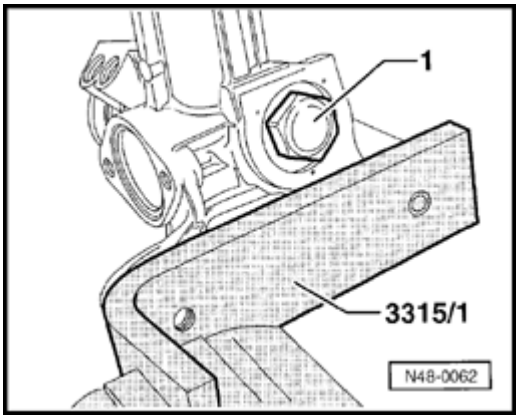

- Thread in locking screw, tighten to 30 Nm (22 ft lb) and crimp at corner points.
- Grease pressure piece with AOF 063 000 04.
- Install pressure piece, spring and washer in housing.
- Install cover with adjusting screw. Adjust steering gear after installation in vehicle.

48-77

Tie rods, removing and installing (power steering gear - TRW and F)

Note:

- *Observe how tie rods are threaded into power steering gear:*

- Tie rods not secured with locking fluid

- Tie rods secured with locking fluid

- *When exchanging secured version tie rods use locking fluid D6 when installing.*

Removing

The tie rods can only be removed/installed with the steering gear removed.

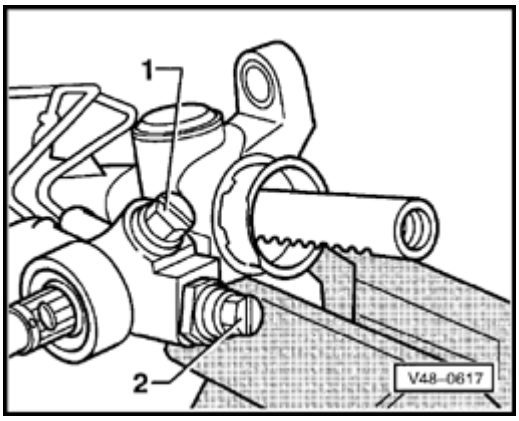

- Seal line connections on power steering gear.

1 - Plastic sealing plugs

2 - Plastic sealing plugs

- Clean outside of power steering gear in vicinity of the boot.

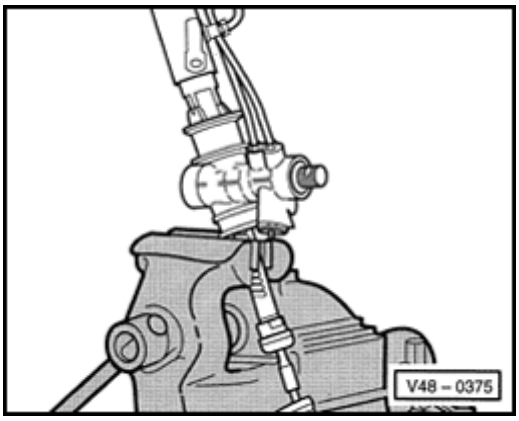

- Open hose clips and push boot back.

- Clamp steering gear with rack in a vice.

Note:

Use vice clamps, check vice clamps for impurities e.g. metal filings or similar and thoroughly remove.

- Remove tie rod.

Installing

Installing tie rod without locking fluid D6.

Install in reverse order. Tightening torque: 70 Nm (52 ft lb)

Installing tie rods with locking fluid D6

If parts are reused, it is essential to clean any residue of locking fluid off the threaded studs of the inner joint or the thread tapped hole as described below. Otherwise there is a danger of the thread being damaged when being reinstalled or removed.

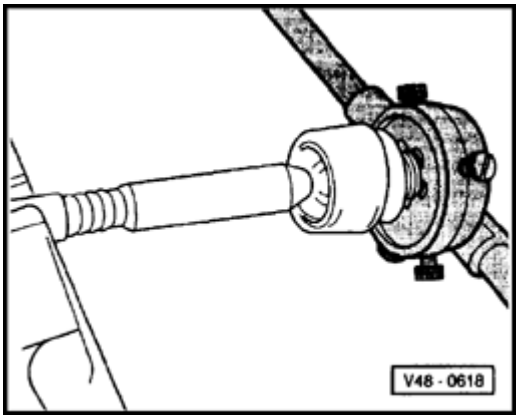

- Clean threaded stud or tie rod with M 14 x 1.5 tap or wire brush.
- Check if joint stud threads are deformed replace if necessary.

Note:

Do not tilt tap when positioning. If it is difficult to turn the tap onto the thread or if metal swarf forms, this indicates the thread is deformed.

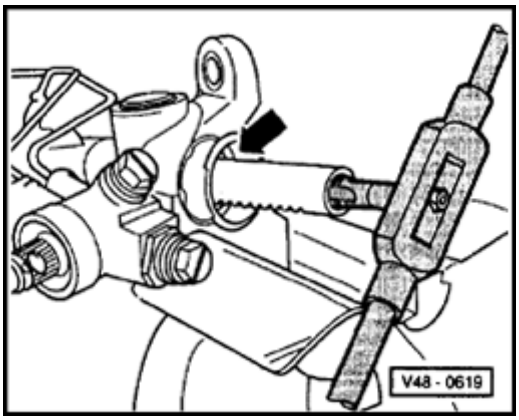

- Cover steering gear housing opening (arrow) with a cloth.
- Clean threaded hole in rack with M 14 x 1.5 tap.
- Clean thread with nitro thinners e.g. L 160 (thread must be oil and grease free).
- Clean with compressed air.

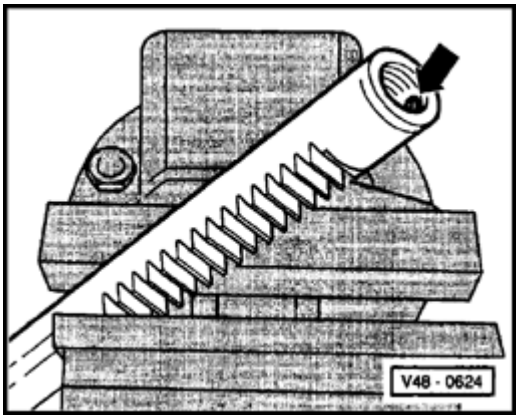

Installing

- Adjust new tie rod to length ⇒ Page 48-84 .
- Coat tapped hole thread with D6 locking fluid (arrow).

Note:

Apply one drop only in 2nd thread of rack. If too much D6 is used the release torque when next disassembling will be too high. No D6 must get onto steering rack.

- Tighten tie rod to the specified torque, 70 Nm (52 ft lb). Always use a torque wrench.

Boot, installing

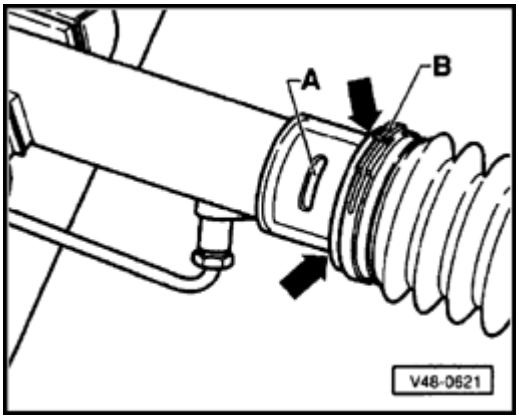

- Check boot for wear (cuts, cracks) and ensure sealing surfaces are clean.
- Install boot, but first turn the tie rod so that the tie rod ball joint shank is in the installation position.
- Install pressure balance line.

Note:

- *Do not damage sticker -A- when pushing the boot on (only on TRW power steering gears).*
- *Make sure that the boot and the pressure balance line are installed correctly.*

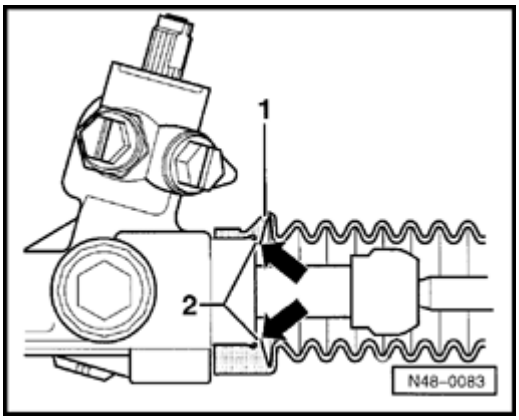

- *Only use genuine hose clips -B-*

1 - Boot

2 - Housing

During assembly of the boot ensure that the bead -arrows- contacts the housing.

48-82

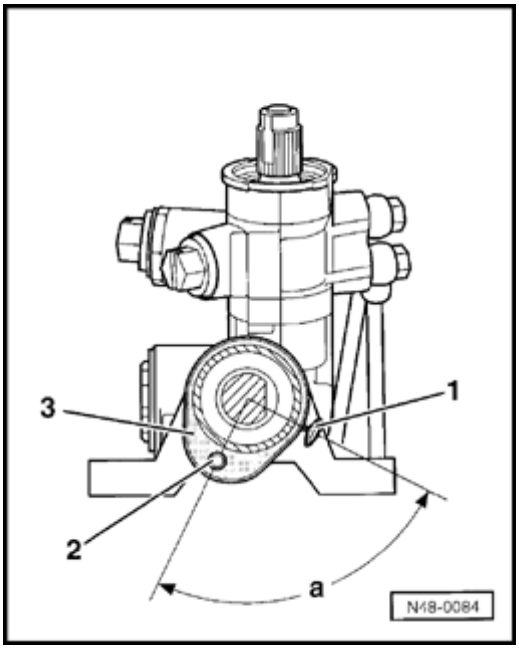

1 - Hose clamp

2 - Pressure compensating tube

3 - Boot

4 - Approx. 90°

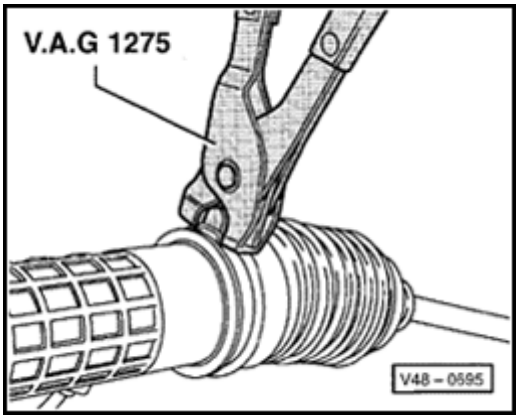

- Tension hose clamps with pliers VAG 1275 or equivalent.

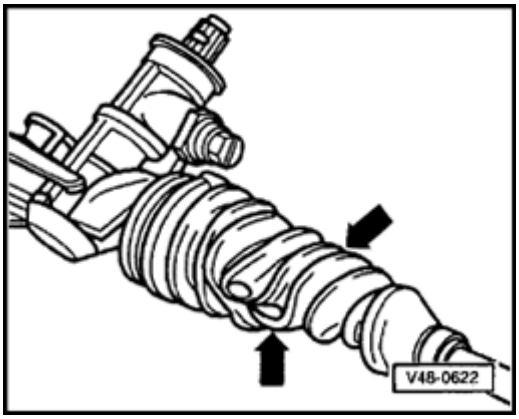

Note:

- *The boot must not be installed twisted.*

Left-hand tie rod length, checking and adjusting

- Check dimension "a" on left-hand tie rod and if necessary adjust.

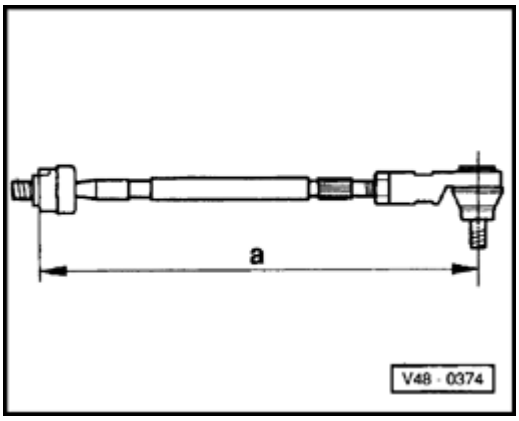

➤ Dimension "a" = 395 + 1 mm (all except from VR6 and 16V)

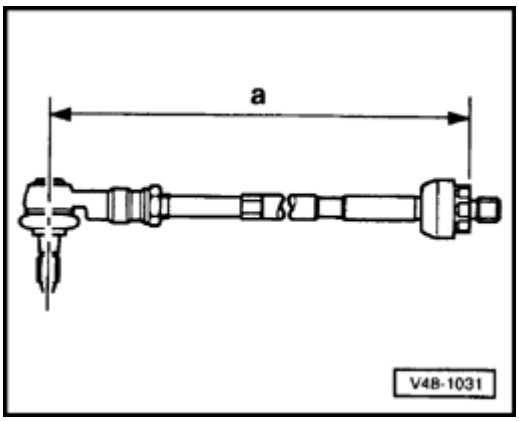

➤ Dimension "a" = 413 ± 1 mm (VR6 and 16V)

Note:

- *Only adjust toe on right-hand tie rod.*
- *Before installing new left-hand tie rod check dimension a and if necessary adjust.*

Assembly overview: vane pump, reservoir and hydraulic lines (vehicles with 4-Cyl. engines)

It is not intended that repair work be carried out on the vane pump. If complaints are received determine cause with the help of pressure and leakage tests. Replace pump if faulty.

Note:

- *Pumps supplied as spare parts are not filled with oil. Fill the pump with G 002 000 hydraulic oil to rotate it by hand, otherwise the pump may be damaged or noisy during operation.*
- *Type of oil: hydraulic oil G 002 000*
- *Oil system capacity: 0.7 - 0.9 ltr. (0.74 - 0.95 qt.)*
- *Do not reuse drained hydraulic oil.*
- *Always replace O-rings.*

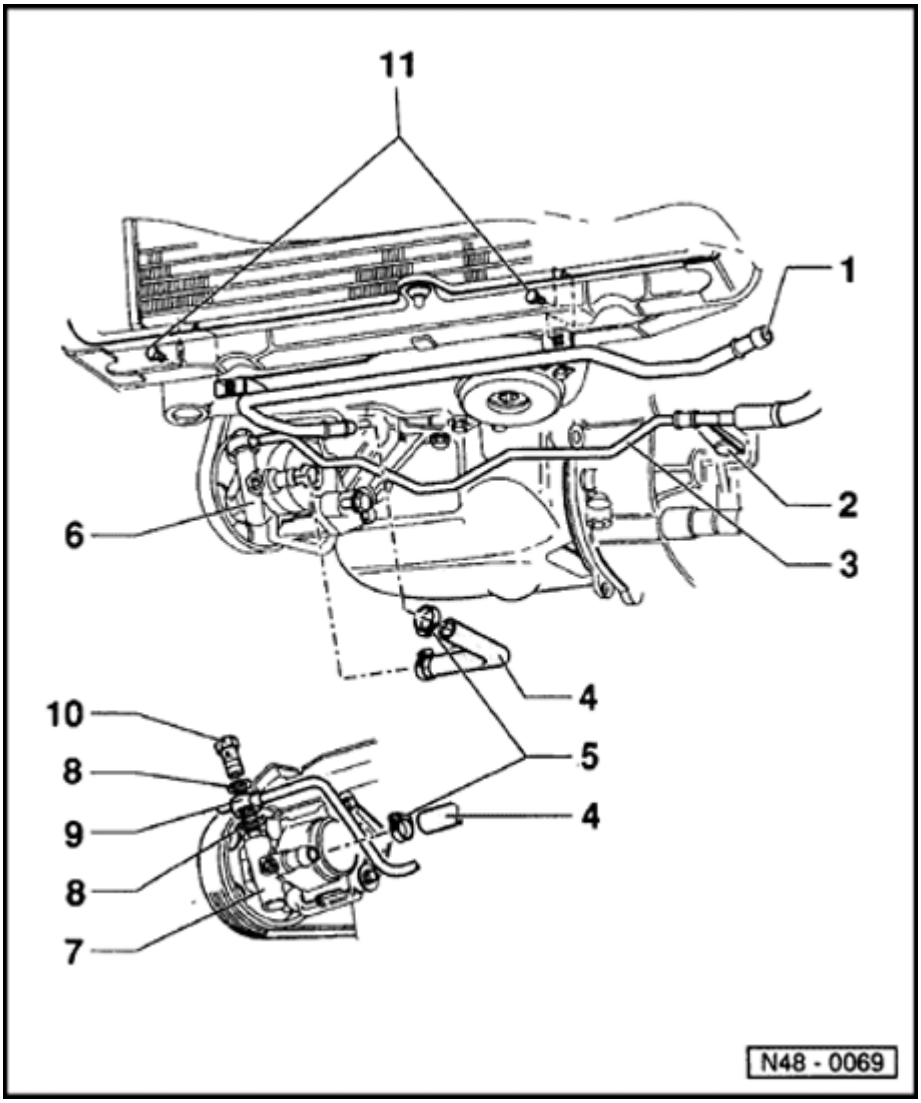

1 - Cooling line

- Secured to crossmember ⇒ item 9

2 - Bracket

- Various versions depending on engine/transmission ⇒ Page 48-96

3 - Pressure line

4 - Suction line

- Hydraulic pump - Cooling line

5 - Hose clamp, 3 Nm (27 in lb)

6 - Hydraulic pump

- With V-belt pulley

7 - Hydraulic pump

- With ribbed belt sprocket

8 - O-ring

- Always replace

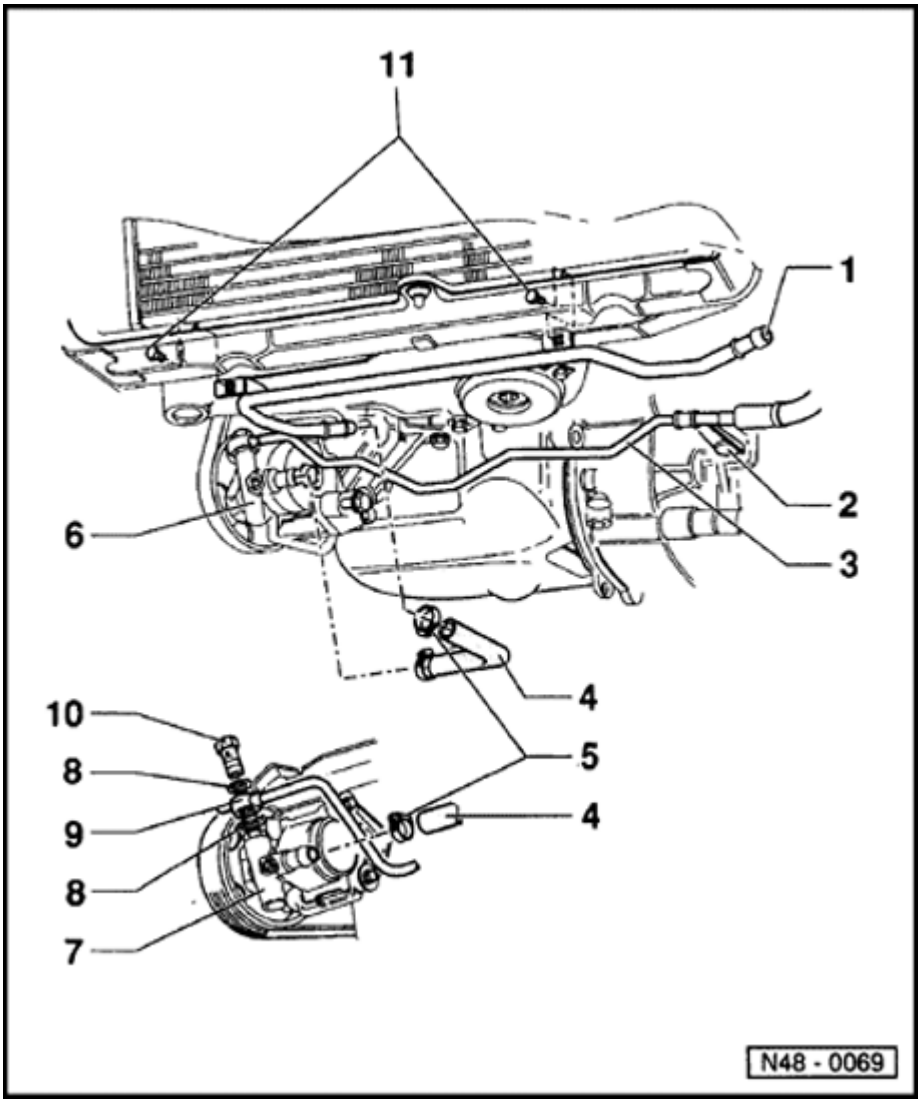

9 - Pressure line union

10 - Banjo bolt, 35 Nm (26 ft lb)

11 - Hex bolt, 10 Nm (7 ft lb)

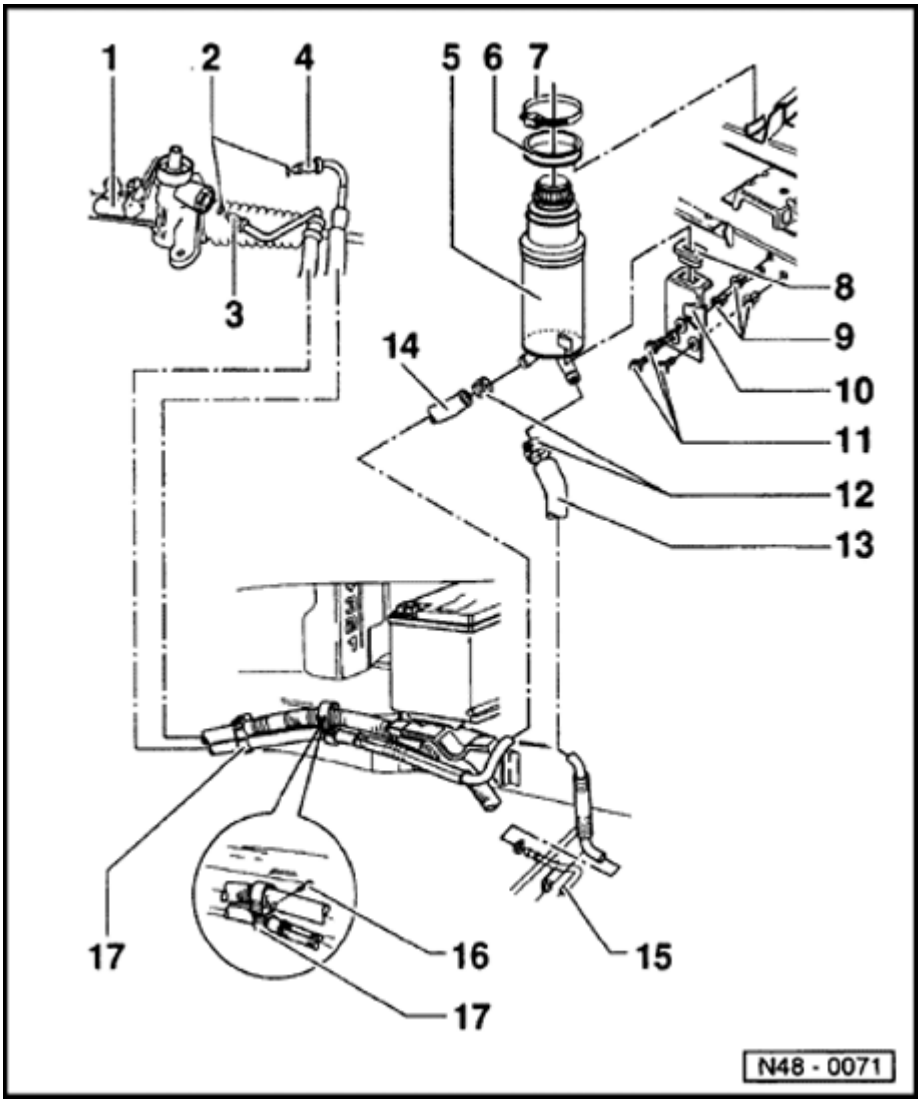

Assembly overview: Hydraulic lines, reservoir (vehicles with 4-Cyl. engines)

Notes ⇒ Page 48-85

1 - Power steering gear

2 - O-ring

- ♦ Always replace

3 - Return line, 30 Nm (22 ft lb)

4 - Pressure line, 30 Nm (22 ft lb)

5 - Reservoir

6 - Rubber ring

7 - Hose clamp

8 - Rubber insert

9 - Captive nut

10 - Bracket

48-89

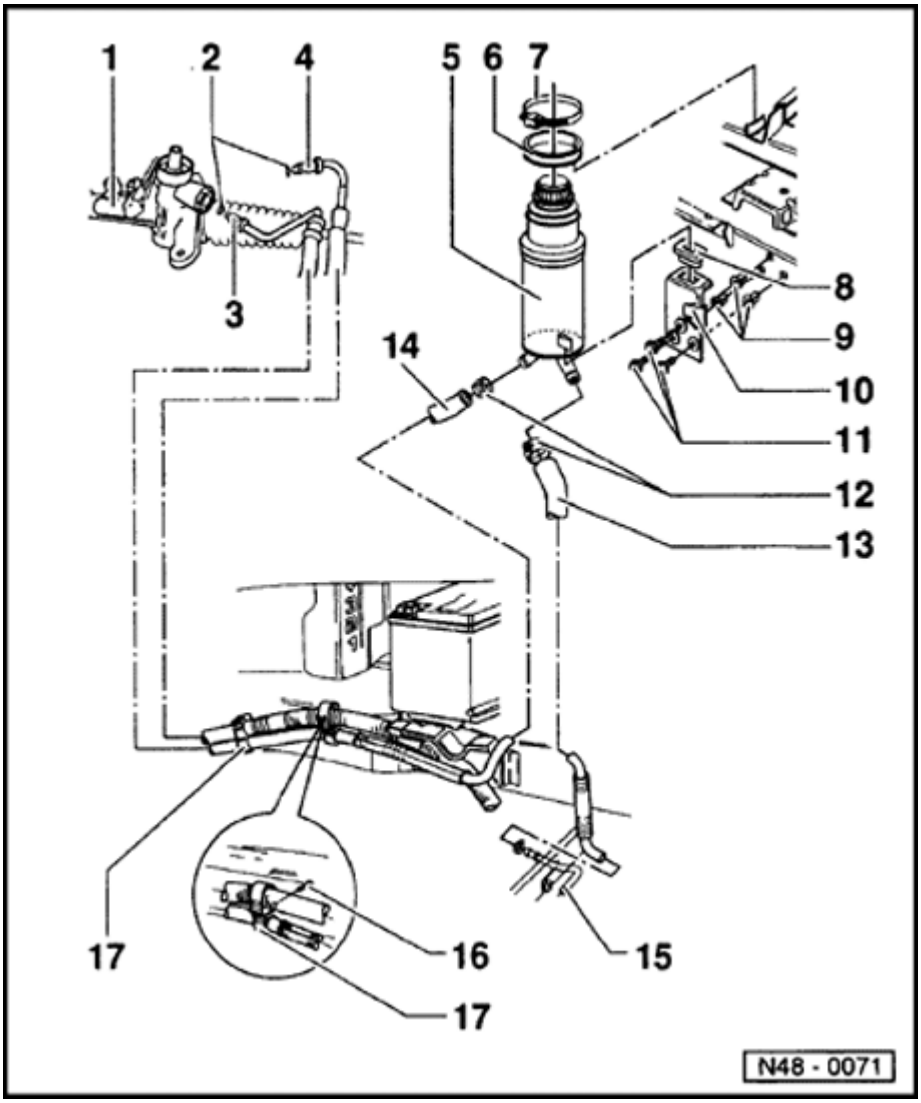

11 - Self-tapping screw

12 - Hose clamp

13 - Return hose

14 - Suction hose

- Reservoir - Cooling line

15 - Cooling line

16 - Threaded stud

17 - Bracket

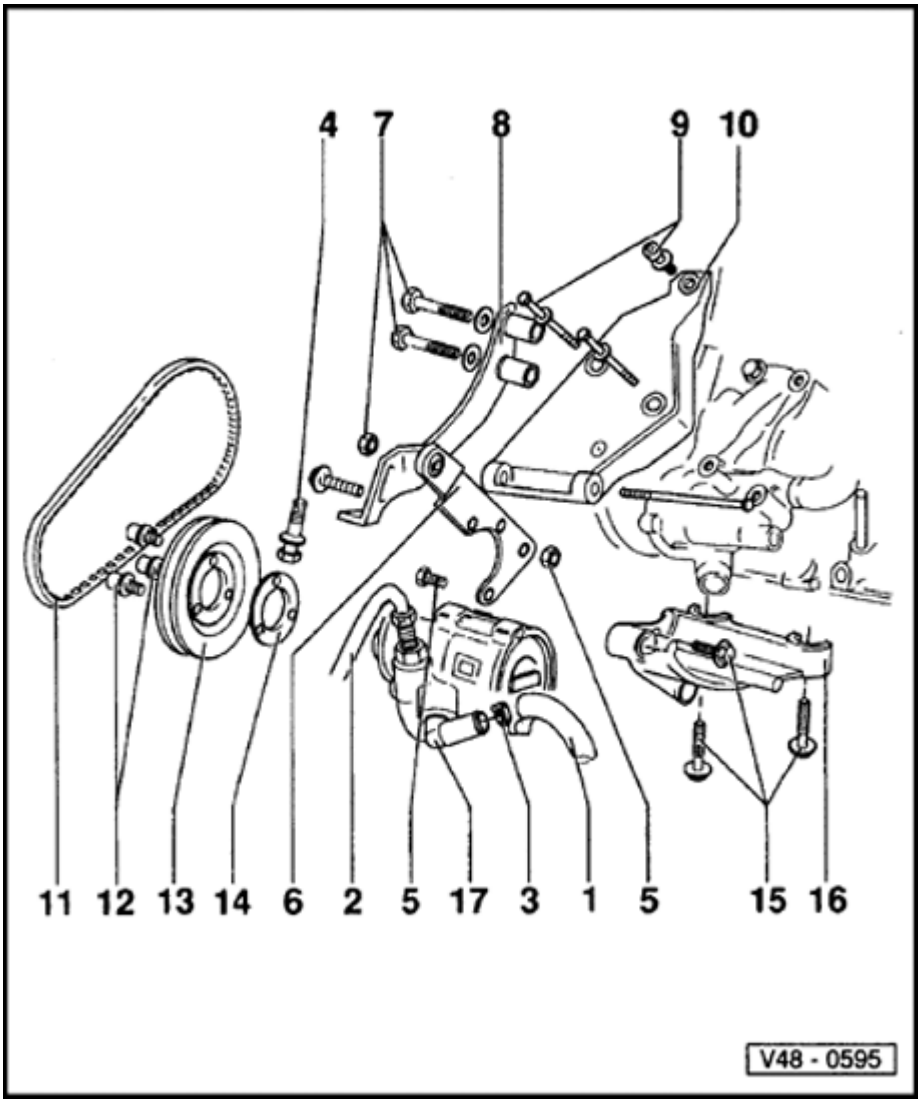

Power steering vane pump, removing and installing (vehicles with 4-Cyl. engines)

Note:

- Always replace self-locking nuts and bolts.
- Pumps supplied as spare parts are not filled with hydraulic oil. Fill the pump with G 002 000 hydraulic oil and rotate it by hand, otherwise the pump may be damaged or noisy during operation.
- Do not reuse drained hydraulic oil.

1 - Suction hose

2 - Pressure hose

3 - Hose clamp

4 - Tensioning bolt

- Tensioning V-belts ⇒ item 11

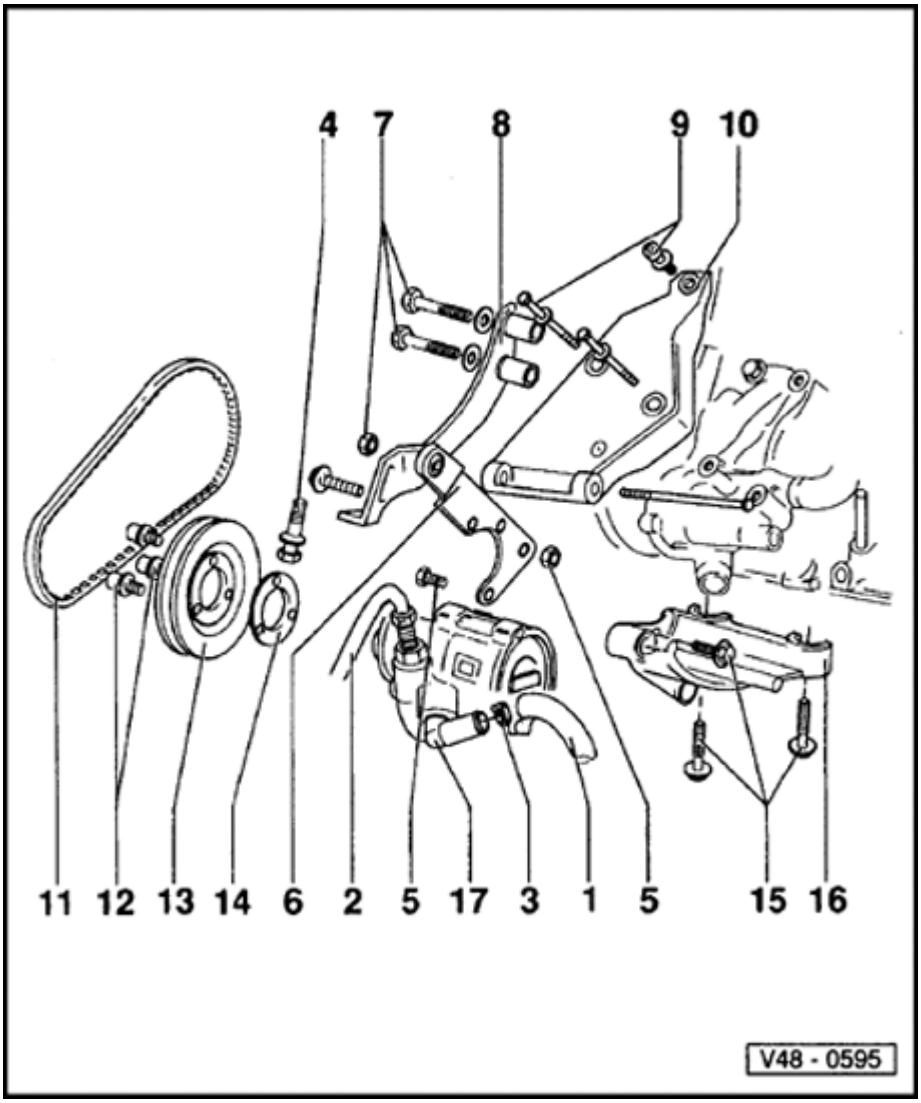

5 - 20 Nm(15 ft lb)

6 - Front swivel bracket

7 - 20 Nm (15 ft lb)

8 - Adjustment bracket

9 - 20 Nm (15 ft lb)

10 - Bracket

11 - V-belts

- 11.5 x 685 Gas engine
- 11.5 x 730 Diesel engine
- 11.5 x 755 Gas engine with air conditioner
- 11.5 x 790 Diesel engine with air conditioner
- Tensioning ⇒ Page 48-93
- Checking condition

⇒Maintenance Manual

12 - 25 Nm (18 ft lb)

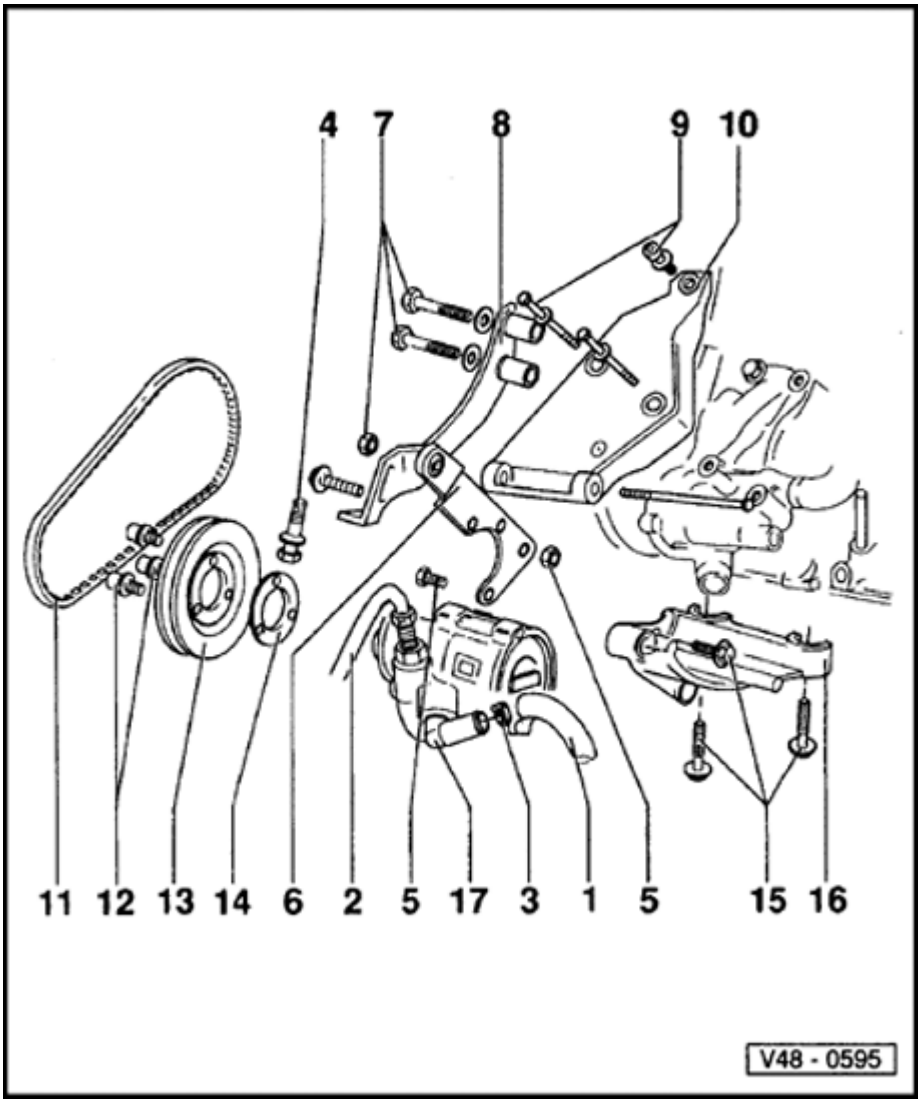

13 - V-belt pulley

- When installing the V-belt pulley ensure that the crankshaft pulley and the vane pump pulley are aligned

14 - Shim

- Only installed on vehicles with Diesel engine

15 - 20 Nm (15 ft lb)

16 - Rear swivel bracket

17 - Vane pump

- Checking delivery pressure ⇒ Page 48-13

V-belts, tensioning (4-Cyl. engines)

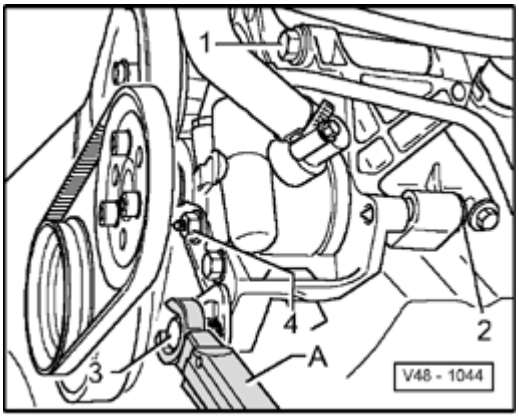

- Tension V-belts by turning adjustment bolt with torque wrench -A- (VAG 1410 and VAG 1410/2).

Specification:

- Used belts, 4 Nm (35 in. lb)
- New belts, 7 Nm (62 in. lb)

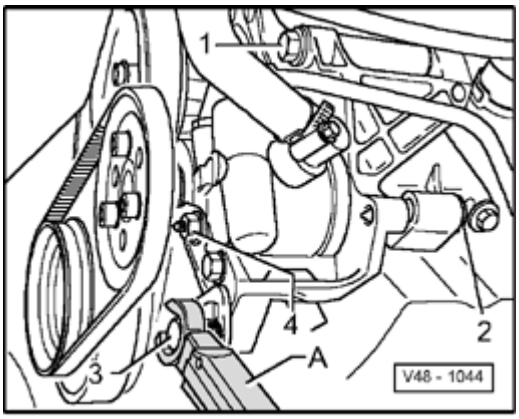

- Tighten adjustment clamping bolt -3- to 25 Nm (18 ft lb).
- Tighten bolt -1- to 45 Nm (33 ft lb).
- Tighten bolt -2- and nut -4- to 25 Nm (18 ft lb).

Note:

Nut 4 - is only installed on gasoline engines.

48-94

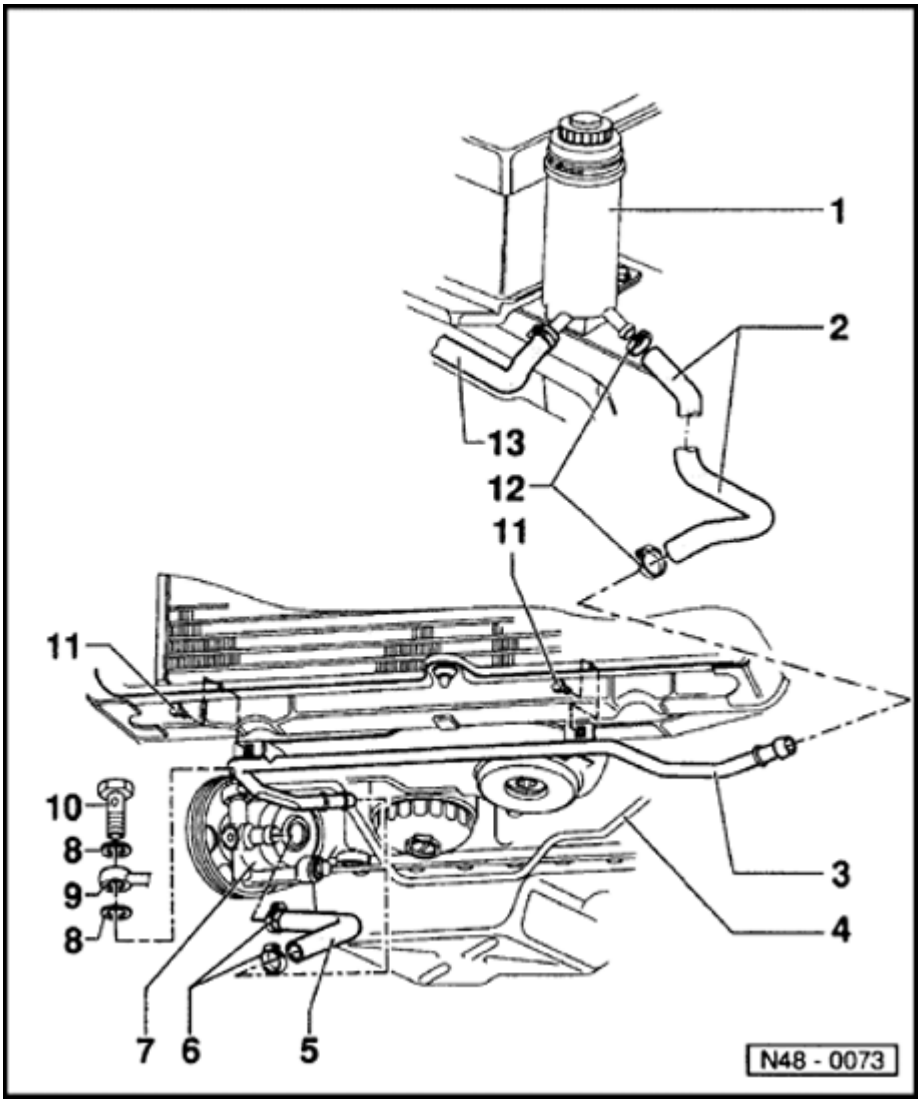

Assembly overview: Pressure and cooling lines (vehicles with VR6 engine)

Note:

Securing of pressure line varies according to type of transmission ⇒ Fig. 1 and ⇒ Fig. 2

1 - Reservoir

2 - Suction hose

- Reservoir - Cooling line

3 - Cooling line

- Secured to crossmember ⇒ item 8

4 - Pressure line

5 - Suction line

- Cooling line - Hydraulic pump

6 - Hose clamp, 3 Nm (27 in. lb)

48-95

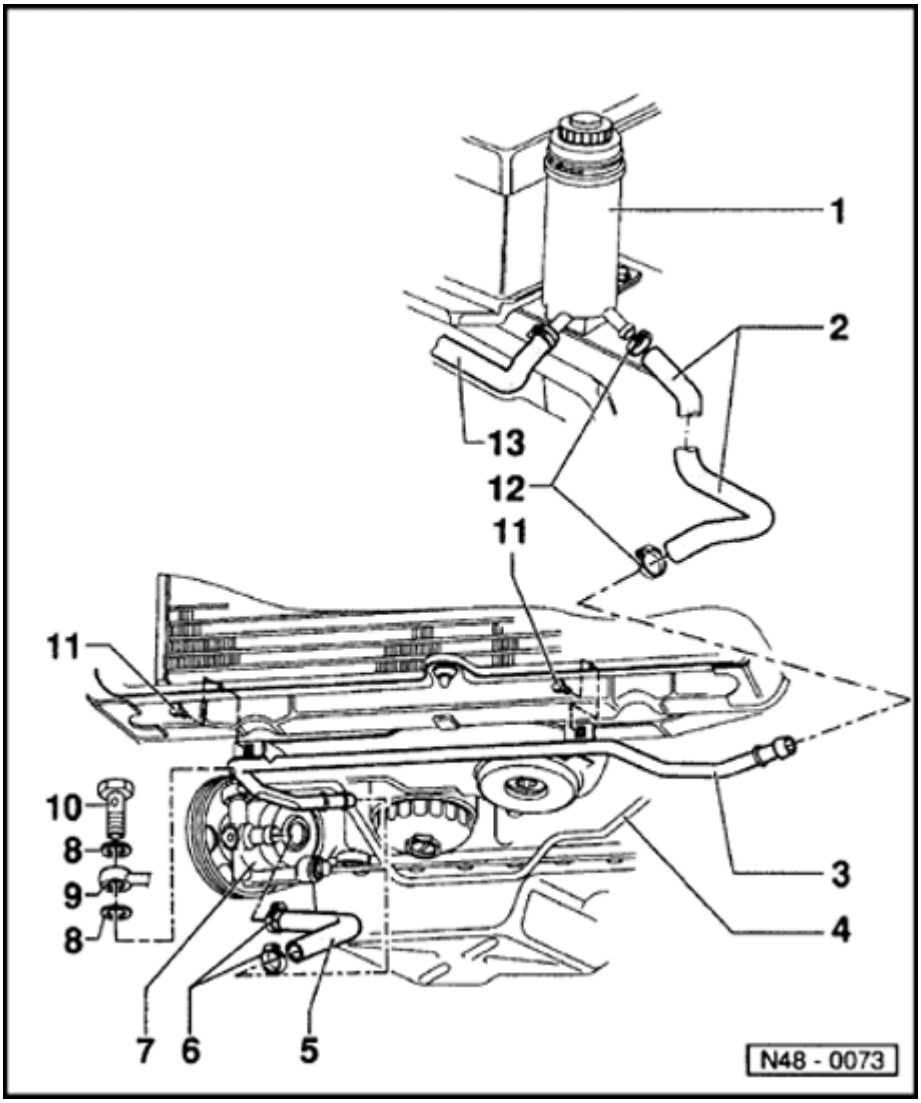

7 - Hydraulic pump

8 - Seal

- Always replace

9 - Pressure line union

10 - Banjo bolt, 35 Nm (26 ft lb)

11 - Hex bolt, 10 Nm (7 ft lb)

12 - Hose clamp, 3 Nm (27 in. lb)

13 - Return line

- Power steering gear - Reservoir

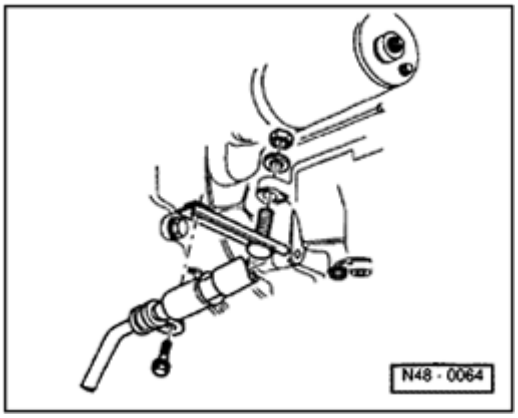

Fig. 1 Pressure hose, securing (vehicles with manual transmission)

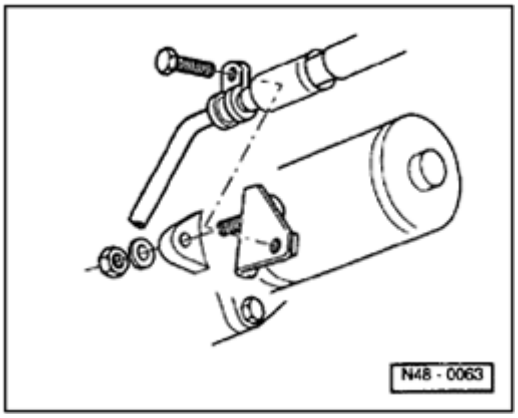

Fig. 2 Pressure hose, securing (vehicles with automatic transmission)

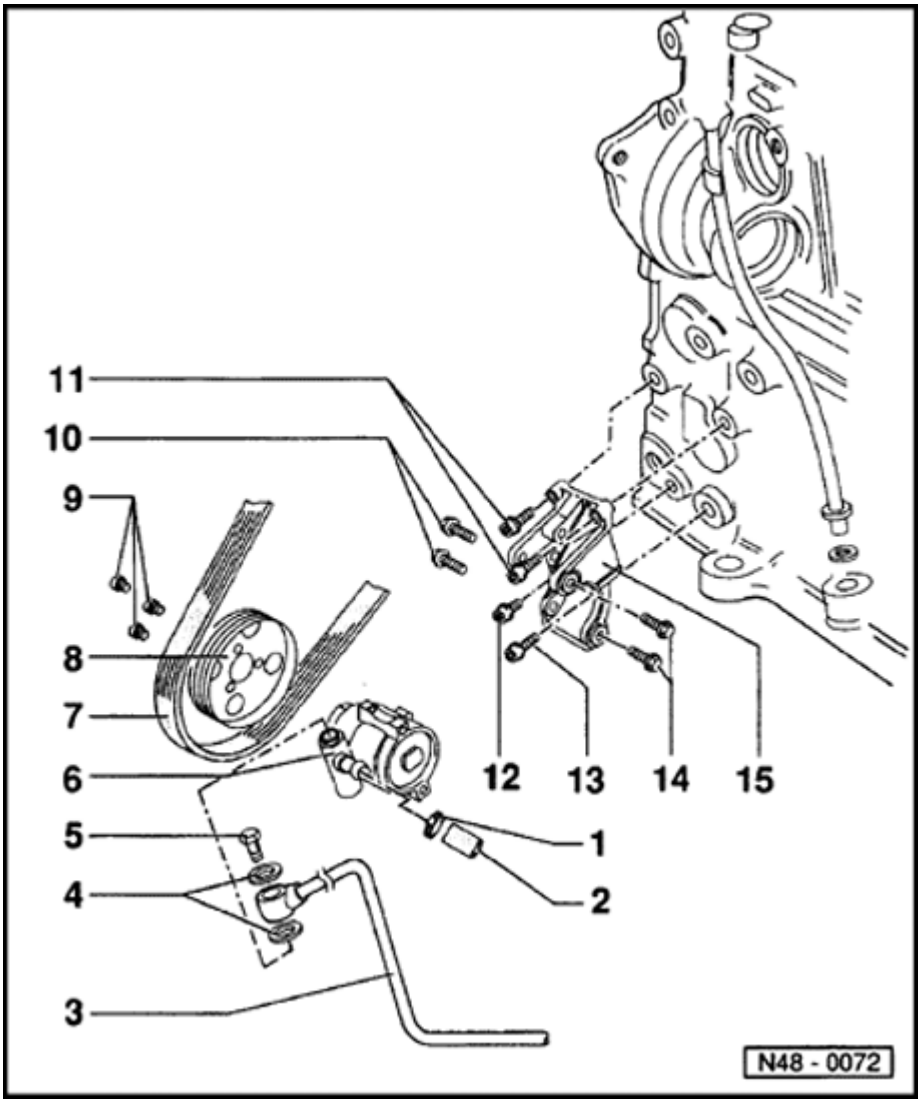

Power steering vane pump, removing and installing (vehicles with VR6 engine

Note:

- *Always replace seals.*
- *Do not reuse drained hydraulic oil.*
- *Pumps supplied as spare parts are not filled with oil. Fill the pump with G 002 000 hydraulic oil and rotate it by hand, otherwise the pump may be damaged or noisy during operation.*

1 - Suction hose

- A cooling line is installed between vane pump suction hose and reservoir

2 - Hose clamp

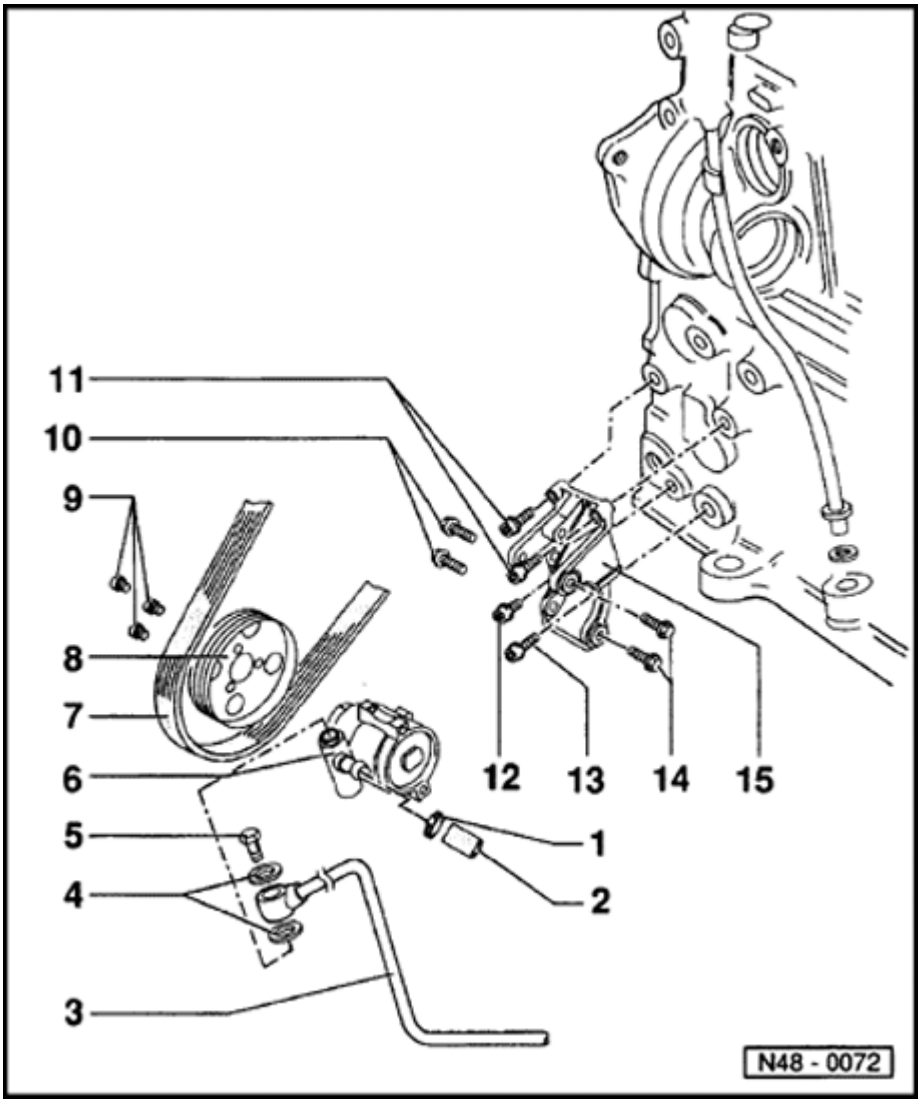

3 - Pressure hose

- Attachment varies according to type of transmission ⇒ Page 48-96

4 - Seal

5 - Banjo bolt, 30 Nm (22 ft lb)

6 - Vane pump

- Checking delivery pressure ⇒ Page 48-13

7 - Ribbed belts

- Removing

Repair Manual, Engine Mechanics; Repair Group13

- Tensioning ensured by tensioning roller
- Belt routing

Repair Manual, Engine Mechanics; Repair Group13

- Checking condition

⇒ *Repair Manual, Maintenance*

8 - Belt pulley

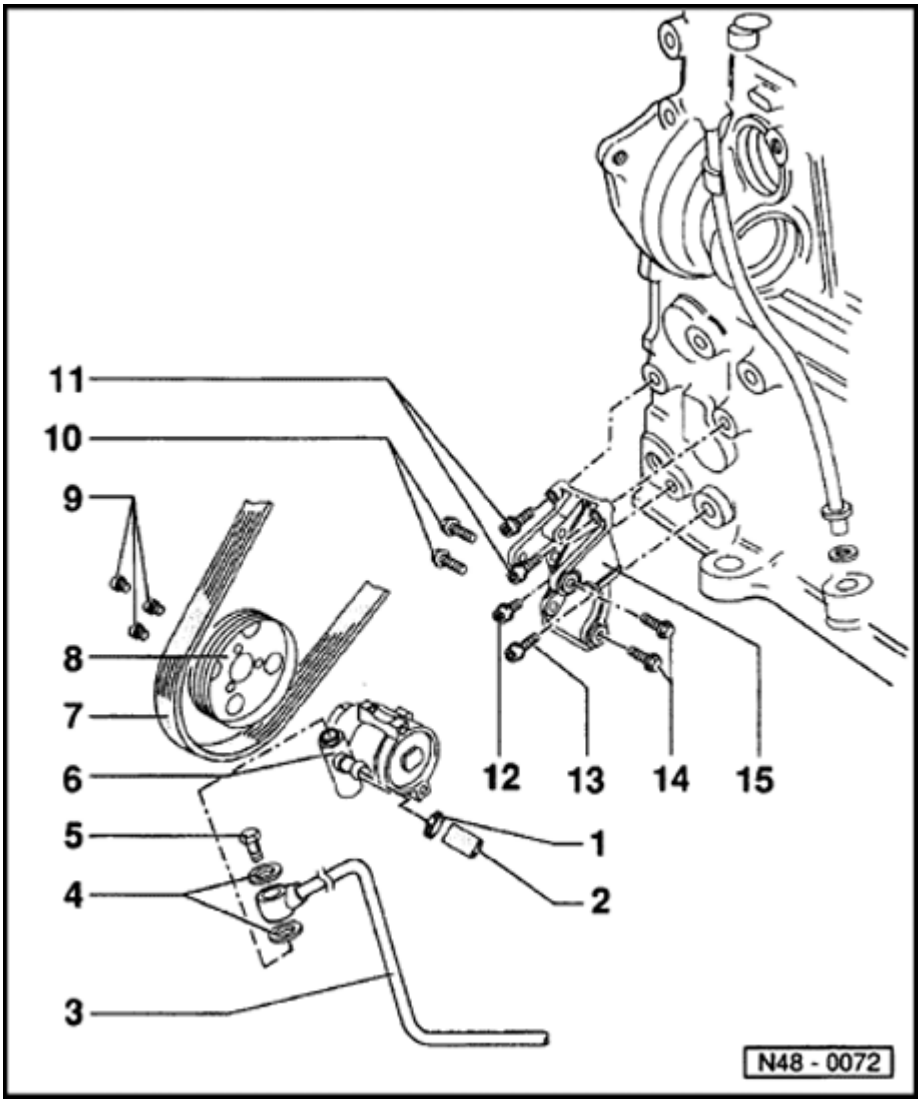

9 - Hex socket head bolt, 25 Nm (18 ft lb)

10 - Hex bolt, M8 x 30, 25 Nm (18 ft lb)

11 - Hex socket head bolt, M8 x 30, 25 Nm (18 ft lb)

12 - Hex socket head bolt, M8 x 20, 25 Nm (18 ft lb)

13 - Hex socket head bolt, M8 x 30, 25 Nm (18 ft lb)

14 - Hex bolt, M8 x 30, 25 Nm (18 ft lb)

15 - Bracket

- On vehicles with air conditioner can only be removed having first removed the air conditioner bracket

Volkswagen Passat

Official Factory Repair Manual

1995, 1996, 1997
Gasoline, Turbo Diesel, TDI
4-cylinder and VR6, including wagon

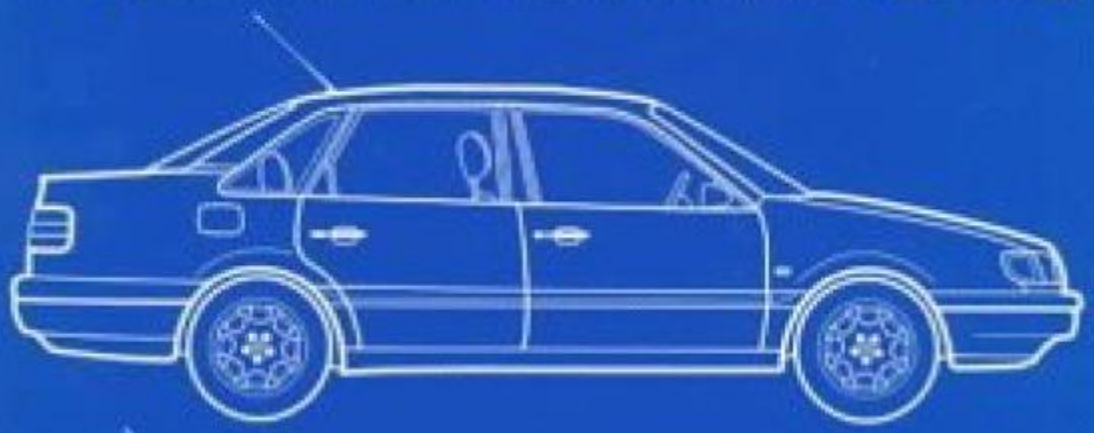

Robert Bentley

PASSAT '95 - '97

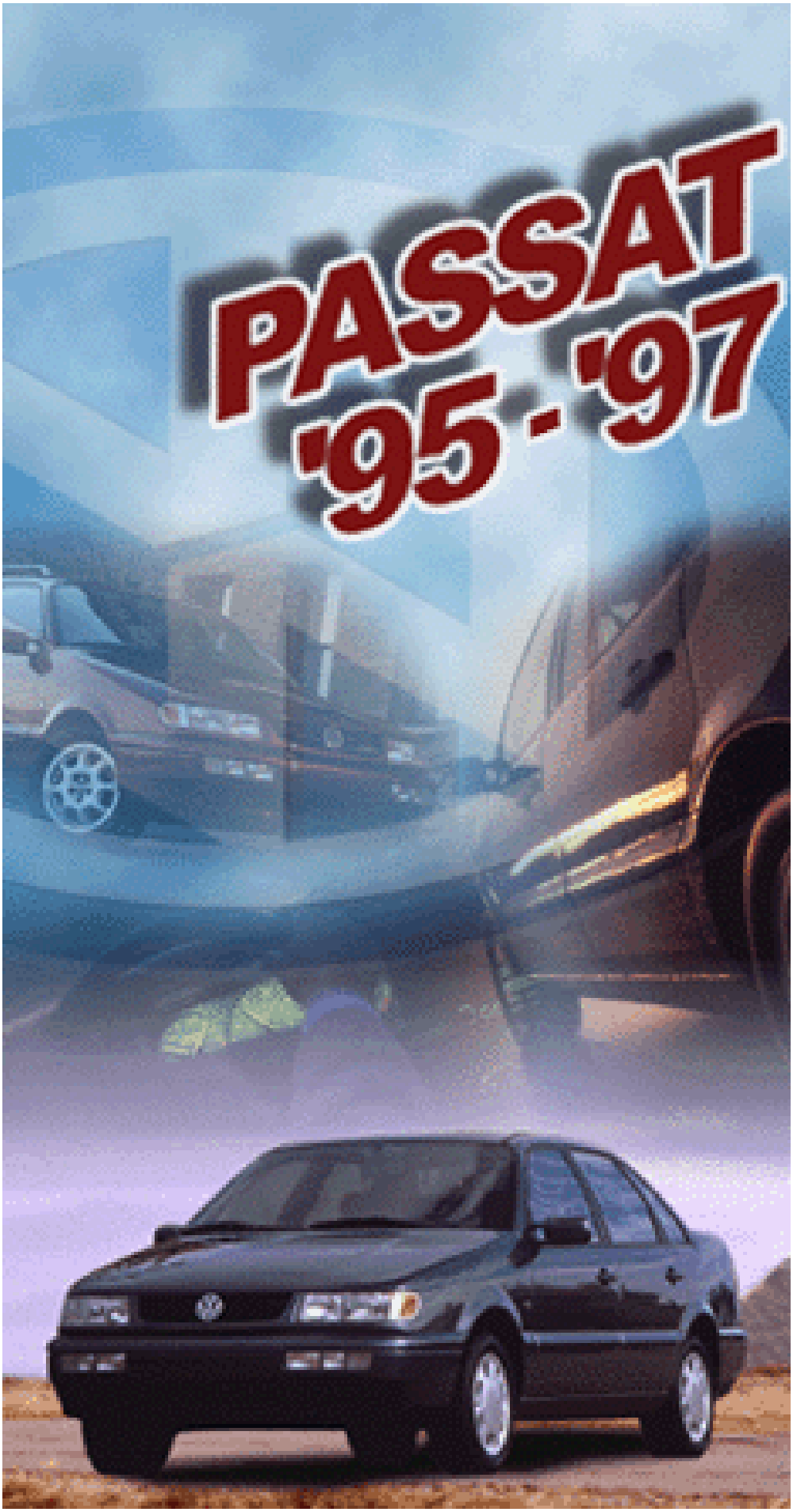

Body Exterior, Interior

01 - On Board Diagnostic (OBD)

Airbag System, On Board Diagnostic (OBD), vehicles up to 09.94
Function
Test requirements
Scan Tool VAG1551, connecting and selecting function
Diagnostic Trouble Code (DTC) Memory, checking
Diagnostic Trouble Code (DTC) table
Diagnostic Trouble Code (DTC) Memory, erasing, ending output

Airbag system, On Board Diagnostic (OBD), vehicles from 10.94
Special tools
Function
Scan Tool VAG1551, connecting and selecting function
Diagnostic Trouble Code (DTC) Memory, checking
Diagnostic Trouble Code (DTC) table
Diagnostic Trouble Code (DTC) Memory, erasing, ending output
Airbag Control Module, coding with VAG1551 Scan Tool
Measuring value block, reading
Test box VAS5056

50 - Body - Front

Body, front
Lock carrier, removing and installing
Front fender, removing and installing

55 - Hood, Lids

Hood
Hood lock cable, removing and installing

Rear lid
Rear lid lock, removing and installing (Sedan)
Rear lid lock, removing and installing (Wagon)
Lock cylinder, removing and installing
Gas strut, removing
Gas strut, emptying
Rear lid springs, removing and installing
Tailgate, adjusting (Wagon)
Rear lid, adjusting (Sedan)

57 - Front doors, Central locking system

Front door assembly
Front door, servicing
Front door assembly (with power window)
Door, removing and installing
Power window regulators, removing and installing
Window glass, removing
Window glass, installing on window regulator
Outer window channel, removing
Outer window channel, installing
Lift channel, installing on door window glass
Door inner seal, removing
Power window regulators, removing and installing
Power window regulators, repairing
Door handle assembly (central locking system)
Door handle, removing and installing
Inner release handle, removing
Common key locking, maintaining
Door lock assembly
Door lock assembly (with free-play adjustment), removing and installing

Central locking, repairing (Sedan)
Central locking, repairing (Wagon)
Bi-pressure pump, installing (Sedan)
Fuel tank flap activator, removing and installing
Front door activator, removing and installing
Rear door activator, removing and installing
Central locking system, functional check
Anti-theft function, checking

58 - Rear doors

Rear door assembly
Door, repairing
Door, removing and installing
Window regulator, removing and installing
Door window glass, removing and installing
Door window glass, installing
Outer window channel, removing
Outer window channel, installing
Lift channel, installing on window glass
Rear window regulator, servicing
Side reinforcement, removing and installing
Door lock assembly
Door handle, removing and installing
Door lock, removing and installing

Inner release handle, removing
Door inner seal, removing

60 - Sunroof

Sliding/tilting roof
Special tools and equipment
Sliding/tilting roof, component overview
Sliding/tilting roof panel, removing
Sliding/tilting roof panel, installing
Parallel alignment, checking and adjusting
Flap headliner, removing
Panel for sliding/tilting roof, adjusting height
Cable drive, checking 0-position
Sliding/tilting roof assembly, removing
Water drain hoses, cleaning

Sliding/tilting roof with glass panel
Assembly overview
Sliding/tilting roof glass panel, removing
Panel seal, adjusting
Glass panel for siding/tilting roof, installing
Sliding headliner, removing
Sliding headliner, installing
Parallel alignment, checking
Parallel alignment, adjusting
Glass panel for sliding/tilting roof, adjusting height
Cable drive, checking 0-position

63 - Bumpers

Bumpers
Front bumper, removing and installing
Air intake grille, removing
Front bumper, removing from side member

Rear bumper, removing and installing

64 - Glass, Window regulators

Flush-bonded windows
Special tools
Materials
Windshield, removing and installing
Windshield, removing
Windshield, installing
Rear Window, removing and installing (Sedan)

Broken rear window, removing
Undamaged window, removing
Rear window, installing
Undamaged rear window, removing (Wagon)
Broken rear window, removing
Rear window, installing
Undamaged rear window, preparing for installation
New rear window, preparing for installation
Body flange, preparing for window installation
Rear window, installing
Curing time
Paint repair
Excess adhesive sealing material, cleaning

Bolted windows
Side window, removing and installing (Sedan)
Side window, removing and installing (Wagon)

66 - Exterior equipment

Roof moldings
Sedan
Roof frame (Wagon)

Roof railing, removing and installing

Radiator grille, removing and installing

Wheel housing liner

Exterior mirror
Special tools
Exterior mirror, assembly overview

Protective moldings

68 - Interior equipment

Inside mirror
Inside mirror, removing and installing
Inside mirror, repairing using glass/metal adhesive

Luggage compartment cover, removing and installing
Luggage compartment cover, retrofitting

Screen separator wall, retrofitting
Reinforcement plates and securing eyes, installing
Openings for cover caps, cutting out
Screen separator wall, installing

69 - Passenger protection - Airbags, Seat belts

Safety restraint system
Vehicles with emergency tensioning seat belt retractors

Seatbelts
Front seat belts with emergency tensioning seat belt retractors, removing and installing
Belt retractor with tensioning unit, removing and installing
Seat belt height adjuster, removing and installing
Front belt anchor, removing
Front belt latch, removing
Rear belt retractor, removing and installing
LATCH System "Lower Anchors and Tethers for CHildren", installing and retrofitting (Sedan)
LATCH System "Lower Anchors and Tethers for CHildren", installing and retrofitting (Wagon)
Front belt tensioning unit, deploying (disposal)

Seat belts, inspecting

Airbag
Airbag system, components
Safety precautions when working on the airbag system
Airbag units, replacing after an accident.
Driver s airbag unit, removing and installing
Steering wheel, removing and installing
Airbag Spiral Spring -F138-, removing and installing
Passenger s side airbag unit, removing and installing
Retaining frame, removing
Airbag Control Module -J234-, removing and installing
Airbag units, deploying (disposal)

70 - Interior trim

Instrument panel, removing and installing
Knee bar, removing
Center console, removing and installing
Parking brake lever grip and trim, removing.
Center console extension, removing and installing
Storage shelf, driver s side, removing and installing
Storage shelf, passenger s side, removing

Glove box, removing
Glove box lock

Door trim
Front door trim
Front door trim, removing and installing
Rear door trim
Rear door trim, removing and installing
Door moisture barrier, removing and installing

Trim
Upper A-pillar trim, removing and installing
Lower A-pillar trim, removing and installing
B-pillar trim, removing and installing
Upper C-pillar trim, removing and installing
Lower C-pillar trim, removing and installing
Lower C-pillar upholstery, removing and installing
D-pillar trim (Sedan), removing and installing
D-pillar trim, removing and installing (Wagon)
Rear shelf and belt retractor cover, removing and installing (Sedan)
Belt guide, removing
Front luggage compartment trim and belt retractor cover, removing and installing (Wagon)
Rear luggage compartment trim, removing and installing (Wagon)
Luggage compartment side trim, (Sedan)
Rear lock carrier trim, removing (Sedan)
Rear lock carrier trim, removing (Wagon)
Tailgate trim, removing and installing (Wagon)
Tailgate hinge cover cap, removing and installing (Wagon)
Sill cover, removing and installing

Headliner
Molded headliner, removing and installing (Sedan)
Molded headliner with sunroof, removing and installing (Sedan)
Headliner, removing and installing (Wagon)
Headliner with sunroof, removing and installing (Wagon)
Roof dampening / reinforcement, removing and installing

72 - Seats - Frames

Front seat
Front seat, removing
Seat and backrest frames, separating
Seat frame (standard and sport seat)
Seat frame with mechanical height adjustment
Seat frame with mechanical height adjustment, disassembling and assembling

Seat frame with electrical height adjustment
Seat frame with electrical height adjustment, disassembling and assembling
Backrest frame
Backrest frame, replacing

Rear seats
Rear seat and split backrest, removing

74 - Seats - Upholstery, Covers

Seat upholstery
Cover and padding for front seat, removing and installing
Cushion cover and padding for front seat with height adjustment, removing and installing
Backrest cover and padding, removing and installing
Rear seat cover and padding, removing and installing
Backrest (split) covers and padding, removing and installing
Backrest lock, removing and installing
Heater element for seat, installing
Center armrest, removing
Upholstery clips, removing and installing

Airbag System, On Board Diagnostic (OBD), vehicles up to 09.94

Function

The Airbag Control Module -J234- is located behind the console on the center tunnel. It is equipped with a Diagnostic Trouble Code (DTC) Memory. The Data Link Connectors (DLCs) are located to the right of the ignition switch.

The Airbag Control Module -J234- detects malfunctions in the airbag system and stores them in a permanent memory.

After the ignition is switched on, the Airbag Malfunction Indicator Lamp (MIL) -K75- comes on for about 3 seconds and then goes out again.

If the MIL -K75- does not go out again, there is no voltage supply to the Airbag Control Module -J234-. Correcting the malfunction ⇒ Page 01-8 .

If a malfunction exists, the MIL -K75- comes on again.

To begin, start OBD and retrieve the stored information with the VAG1551 Scan Tool.

The information displayed refers to a DTC table that lists possible causes and suggest repair measures.

01-2

Test requirements

- All fuses OK according to wiring diagram
- Battery positive voltage (B+) OK (at least 10.5 V).

01-3

Scan Tool VAG1551, connecting and selecting function

Notes:

- *The airbag system is switched off during the On Board Diagnostic.*
- *The DTC Memory can only be erased after repairs have been completed and the DTC Memory has been interrogated.*

Connect Scan Tool VAG1551 with adapter cable VAG1551/3 with ignition off to the Data Link Connectors (DLC) as follows:

- Remove cover for DLCs located to the right of ignition switch.

01-4

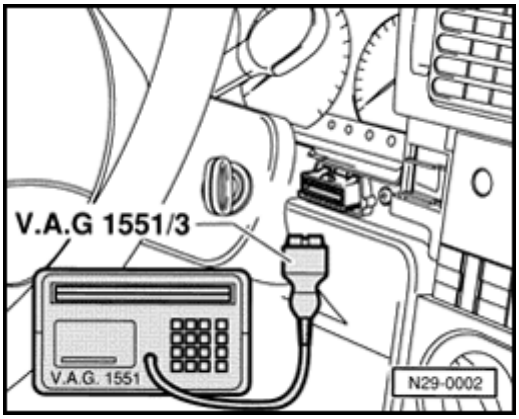

VAG1551 -D/7.0- 1.01.1997

- With ignition switched off, connect Scan Tool VAG1551 with adapter cable VAG1551/3.

Indicated in display

- The current software version is displayed briefly.

Notes:

- *If nothing is displayed, check voltage supply for VAG1551 according to wiring diagram.*

⇒Electrical Wiring Diagrams, Troubleshooting and Component Locations

- *ou can print out additional operating information by pressing the HELP button of the VAG1551.*
- *The → button is used for advancing the program sequence.*
- *Use the PRINT button to switch on the printer (control light in the button lights up).*

01-5

- Switch ignition on.

- Press button -1- for "Rapid data transfer" mode.

VAGOn Board Diagnostic **HELP** **1-Rapid data transfer*** **2-Blink code ***	◄	Indicated in display * displayed alternately
Rapid data transfer **HELP** **Enter address word**	◄	Indicated in display

- Press buttons -1- and -5- to select address word 15 for "Airbag".

Rapid data transfer **15 Airbag**	◄	Indicated in display

- Press -Q- button to confirm entry.

Now a display like this appears for example:

357 959 656 **AIRBAG IS 55**	◄	The Airbag Control module -J234- identification number is displayed.

01-6

Notes:

Rapid data transfer HELP
Control module does not answer!

- *If one of the following messages appears in the display the possible causes of the malfunction can be printed out with the HELP button.*

Rapid data transfer HELP
K wire not switching to positive!

- *Ignition must be switched on.*

Rapid data transfer →
No signal from control module

- *Malfunctions have occurred at the start of or during the program. (external malfunctions).*

Rapid data transfer →
Fault in communication build-up

- *Check diagnostic harness, voltage supply and ground connections.*

- After correcting possible causes of malfunction, again enter address word 15 for "Airbag" and confirm with -Q- button.

Rapid data transfer
Tester sends address word 15

Indicated in display after entering address word 15.

And then the following appears in the display:

357 959 656 AIRBAG IS 55

The Airbag Control module -J234- identification number is displayed.

- Press → button.

Rapid data transfer HELP
Select function

Indicated in display (function selection, i.e. 02 - Interrogate DTC Memory):

Note:

After pressing the HELP button, a list of possible functions is printed out.

List of functions	page
01 - Control module version	⇒ Page 01-3
02 - Checking DTC Memory	⇒ Page 01-8
05 - Erasing DTC Memory	⇒ Page 01-15
06 - Ending output	⇒ Page 01-15

Only functions listed can be used at present for OBD.

After pressing the → button the VAG1551 program returns to the initial position.

01-8

Diagnostic Trouble Code (DTC) Memory, checking

Rapid data transfer **Select function**	**HELP**	⮜	Indicated in display - Press buttons -0- and -2- to select function 02 "Interrogate DTC Memory".
Rapid data transfer **02 - Interrogate DTC Memory**		⮜	Indicated in display - Press -Q- button to confirm entry.

01-9

DTC recognized! ⮜ The number of stored DTCs or "No DTC recognized" appears on the display.

No DTC recognized! →

- Press → button.

  The stored DTCs are displayed and printed out one after the other.

- With the DTC printout go to the DTC table on ⇒ Page 01-11 .

  After you press the → button, the program moves to the initial position.

Rapid data transfer **HELP** ⮜ Indicated in display

Select function

- Ending output (function 06) ⇒ Page 01-15 .
- Switch off ignition and disconnect Data Link Connectors (DLC).

Note:

If a DTC was recognized:

- *1* **. Correct malfunction**
- *2* **. Erase DTC memory (function 05)**
- *3* **. Again check DTC memory (function 02)**

01-10

Diagnostic Trouble Code (DTC) table

Notes:

- *Following are all malfunctions that are recognized by the Airbag Control Module -J234- and which are printed out by the Scan Tool VAG1551 as a 5-digit DTC.*

- *DTCs and blink codes appear in the Rapid data transfer mode only in the printout.*

  Example:

DTC	Blink code
5-digit	4-digit
00277	1221

- *The malfunction type may also be listed in the DTC table.*

- *Before replacing any components suggested to be faulty, be sure to first check all wiring and ground connections according to the applicable wiring diagram.*

- *After you finish the repair, always interrogate and erase the DTC memory using Scan Tool VAG1551.*

Diagnostic Trouble Code (DTC) table

VAG1551 printout	Possible cause	Corrective action
00000 4444		
No DTC recognized	If "No DTC recognized" is displayed after a repair, the OBD is finished.	
00532 2234		
Voltage supply (B+)		
Signal too large	Generator faulty	- Check Generator. ⇒*Electrical Wiring Diagrams, Troubleshooting and Component Locations*
	Control module faulty	- Replace control module if necessary

VAG1551 printout	Possible cause	Corrective action
00532 2234		
Supply voltage (B+)		
Signal too small	Wiring or connectors to airbag Control Module -J234-	- Check wiring and connectors to Airbag Control Module according to wiring diagram.
	Battery discharged or faulty	- Charge battery or replace.
00588		
Airbag Igniter, driver s side -N95-	Wiring or connectors faulty	- Check wiring and connectors according to wiring diagram.
Resistance too high	Airbag Spiral Spring -F138- faulty	- Replace Airbag Spiral Spring if necessary
	Driver s Side Airbag Igniter -N95- faulty	- Replace driver s side airbag unit if necessary
	Control module faulty	- Replace control module

VAG1551 printout	Possible cause	Corrective action
00589		
Passenger s side Airbag Igniter 1 -N131-	Faulty wiring or connectors	- Check wiring and connectors according to wiring diagram
Resistance too high	Passenger side Airbag Igniter -N131- faulty	- Replace Passenger side Airbag Igniter if necessary
	Control module faulty	- Replace control module if necessary
00651		
Wiring to igniter	Faulty wiring or connectors to airbag units	- Check wiring and connectors according to wiring diagram
Short circuit to B+		
Short circuit to Ground		
	Control module faulty	- Replace control module if necessary

VAG1551 printout	Possible cause	Corrective action
65535 1111		
Control module faulty	Control module faulty	Replace control module if necessary

01-15

Diagnostic Trouble Code (DTC) Memory, erasing, ending output

Requirements:

- Malfunction was repaired
- DTC memory was checked again

DTC Memory, erasing

- Press → button.

Rapid data transfer **Select function**	**HELP**	⮜	Indicated in display

- Press buttons -0- and -5- ("Erase DTC Memory" is entered with 05)

Rapid data transfer **05 - Erase DTC memory**		⮜	Indicated in display

- Press -Q- button to confirm entry.

Rapid data transfer **DTC memory erased!**	→	⮜	Indicated in display

- Press → button.

Rapid data transfer **Select function**	**HELP**	⮜	Indicated in display (release for function selection):

Note:

CAUTION **DTC memory was not interogated**		⮜	If this is indicated in the display, the procedure was faulty. *Follow procedure: First interrogate DTC memory, then erase it.*

End output

- Press buttons -0- and -6- to end output.

Rapid data transfer **06 - End output**	**HELP**	⮜	Indicated in display (release for function selection): - Press -Q- button to confirm entry..
Rapid data transfer **Select function**	**HELP**	⮜	Indicated in display - Switch ignition off. - Disconnect Scan Tool VAG1551. - Switch ignition on. Airbag MIL -K75- must light up for about 3 seconds and then go out.

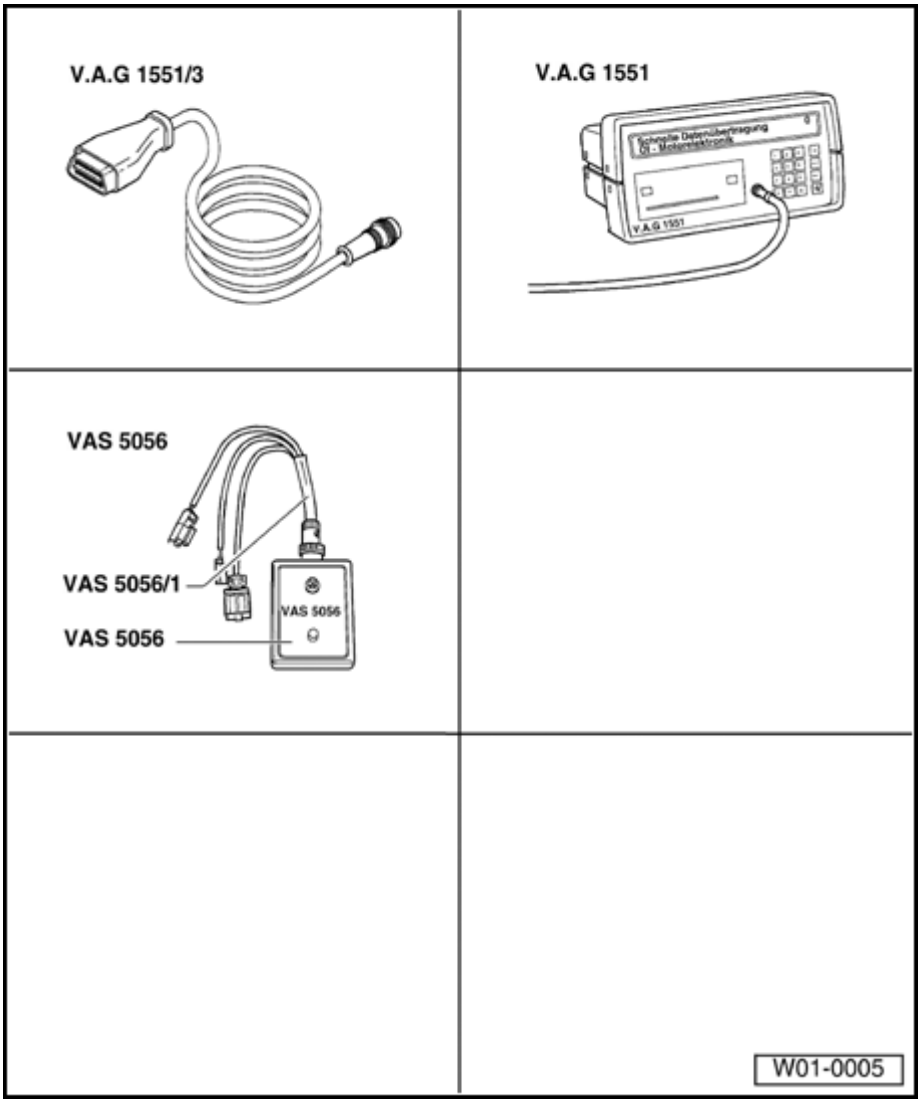

Airbag system, On Board Diagnostic (OBD), vehicles from 10.94

Special tools

Special tools and equipment:

- VAG1551/3 Adapter cable
- VAG1551 Scan Tool
- VAS5056 Test box

01-18

Function

The Airbag Control Module -J234- is located behind the console on the center tunnel. It is equipped with a Diagnostic Trouble Code (DTC) Memory. The Data Link Connectors (DLCs) are located to the right of the ignition switch.

The Airbag Control Module -J234- detects malfunctions in the airbag system and stores them in a permanent memory.

After the ignition is switched on, the Airbag Malfunction Indicator Lamp (MIL) -K75- comes on for about 4 seconds and then goes out again. If the MIL continues to blink for additional 12 seconds it signals that the passenger airbag is disconnected.

- If the MIL -K75- does not go out after about 4 seconds, the supply voltage (B+) for the Airbag Control Module -J234- is faulty. CheckDTC memory ⇒ Page 01-25 .

- If the MIL -K75- comes on again then a malfunction exists. CheckDTC memory ⇒ Page 01-25 .

- If the MIL continues to blink, replace Control Module -J234-.

01-19

Before beginning to troubleshoot, start the On Board Diagnostic (OBD) using VAG1551 Scan Tool.

The information displayed is used to refer to a DTC table that lists possible causes and suggest repair measures.

CAUTION!

- ***Only check wiring visually.***
- ***Do not make electrical open circuit checks or checks of the ignition system.***
- ***Check wiring routing only with the ignition switched off.***

01-20

Scan Tool VAG1551, connecting and selecting function

Test requirements for OBD

- All fuses OK according to wiring diagram.
- Battery positive voltage (B+) OK (at least 10.5 V).

- Remove cover for Data Link Connectors (DLC) to right of ignition switch.
- Switch ignition off.

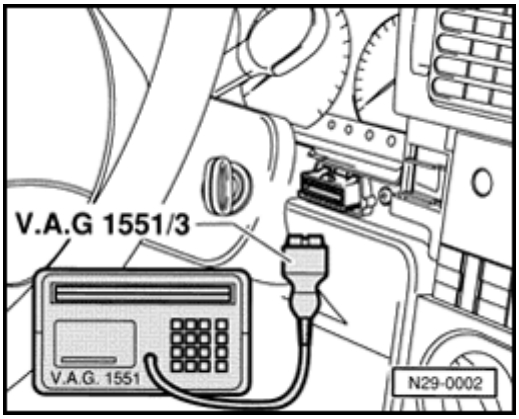

- Connect Scan Tool VAG1551 using adapter cable VAG1551/3.

Indicated in display

- The current software version is briefly displayed.

VAG1551 -D/7.0- 1.01.1997

01-21

VAGOn Board Diagnostic **1-Rapid data transfer*** **2-Blink code display***	**HELP**	⮜	Indicated in display * Displayed alternately

Notes:

- *If nothing is displayed, check voltage supply for VAG1551 according to wiring diagram.*

⇒Electrical Wiring Diagrams, Troubleshooting and Component Locations.

- *ou can print out additional operating information by pressing the HELP button of the VAG1551.*
- *The → button is used for advancing the program sequence.*
- *Use the PRINT button to switch on the printer (control light in the button lights up).*

01-22

Control module version, checking

- Switch ignition on.

- Press button -1- for "Rapid data transfer" mode.

Rapid data transfer **HELP**
Enter address word

Indicated in display

- Press buttons -1- and -5- to select address word 15 for airbag system.

Rapid data transfer
15 - Airbag

Indicated in display

- Press -Q- button to confirm entry.

6N0 909 603 H AIRBAG VW 2 V00 →
Coding 00072 **WSC12345**

Indicated in display (current control module version see Parts catalogue):

- Upper line: Control module Part No.
  System description
  (AIRBAG VW2)
  Version number

- Lower line: Code number
  Dealer number[1)]

[1)]- is automatically stored in the control module when entering current system.

- Press → button.

01-23

Rapid data transfer HELP **Select function**	⮜	Indicated in display
		Notes:
Rapid data transfer HELP **Control module does not answer!**	⮜	♦ *If one of the following malfunction messages appear in the display, the possible causes of the faults can be printed out with the HELP button.*
Rapid data transfer HELP **K-wire not switching to positive!**	⮜	♦ *(Ignition must be switched on)*
Rapid data transfer → **No signal from control module!**	⮜	♦ *Malfunctions have occurred at the start of or during the program (external malfunction sources).*
Rapid data transfer → **Fault in communication build-up**	⮜	♦ *Check diagnostic wiring and ground connections.* - After correcting possible causes of malfunction, again enter address word 15 for "Airbag" and confirm by pressing -Q- button.
Rapid data transfer **Tester sends address word 15**	⮜	Indicated in display after entering address word 15. and then this will appear in the display:
6N0 909 603 H AIRBAG VW 2 V00 → **Coding 00072 WSC12345**	⮜	Indicated in display (for current control module versions see parts catalog)

01-24

List of functions	page
01 - Control module version	⇒ Page 01-22
02 - Checking DTC Memory	⇒ Page 01-25
05 - Erase DTC Memory	⇒ Page 01-31
06 - Ending output	⇒ Page 01-32
07 - Coding control module	⇒ Page 01-33
08 - Reading measuring value block	⇒ Page 01-36

Notes:

- *After pressing the HELP button, a list of possible functions is printed out..*
- *Do not select other functions that may be printed out when pressing the HELP button.*
- *After ending the functions, the Scan Tool VAG1551 will return to the following starting position:*

01-25

Diagnostic Trouble Code (DTC) Memory, checking

Rapid data transfer **Select function**	**HELP**	⮜	Indicated in display - Press buttons -0- and -2- to select function 02 "Interrogate DTC Memory".
Rapid data transfer **02 - Interrogate DTC Memory**		⮜	Indicated in display - Press PRINT button. - Press -Q- button to confirm entry.
DTC recognized!		⮜	The display shows the number of stored malfunctions. The stored DTCs are printed out one after the other. - With the printout go to the DTC table and correct malfunctions
No DTC recognized!	→	⮜	If "No DTC recognized" is shown, the program starts at the beginning after pressing the → button.
Rapid data transfer **Select function**	**HELP**	⮜	Indicated in display If something else is shown in the display:

01-26

⇒Operating instruction of Scan Tool

- Ending output (function 06) ⇒ Page 01-32 .

- Switch ignition off and disconnect Data Link Connector (DLC).

Note:

If a malfunction was recognized:

- *1* **. Repair malfunction**

- *2* **. Erase DTC Memory (function 05)**

- *3* **. Again check DTC memory (function 02)**

01-27

Diagnostic Trouble Code (DTC) table

Notes:

- *All possible DTCs, which can be recognized by the Airbag Control Module -J234- and printed out by the Scan Tool VAG1551 are listed below as a 5-digit DTC.*
- *The DTC code is only shown in the print-out.*
- *Before replacing components listed as faulty, always first check wiring and ground connections according to the wiring diagram.*
- *Check all connectors at the relay panel for good connection.*
- *After completed repair, always interrogate DTC memory and then erase memory using Scan Tool VAG1551.*
- *The DTC table may contain the fault category.*

VAG1551 printout	Possible cause	Corrective action
00000		
No malfunction recognized	If "No malfunction recognized" is displayed, the OBD is finished.	
00532		
Supply voltage (B+)		
Signal too large	Generator faulty	- Check Generator ⇒*Electrical Wiring Diagrams, Troubleshooting and Component Locations*
Signal too small	Wiring or connector to Airbag Control Module -J234-	- Check wiring and connector to control module according to wiring diagram
	Battery discharged or faulty	- Charge battery or replace

VAG1551 printout	Possible cause	Corrective action
00588		
Driver s side Airbag Igniter -N95-		
Resistance value too high		
Resistance value too low		
Short circuit to positive		
Short circuit to ground		
	Faulty wiring or connectors	- Replace or repair faulty wiring or connectors
	Driver s side Airbag Igniter -N95- faulty	- Replace Driver s side Airbag Igniter -N95-
	Airbag Spiral Spring -F138- faulty	- Replace Airbag Spiral Spring -F138-
		- Read measuring value block ⇒ Page 01-36

VAG1551 printout	Possible cause	Corrective action
00589		
Passenger s side Airbag Igniter -N131-		
Resistance value too high		
Resistance value too small		
Short circuit to positive		
Short circuit to ground		
	Faulty wiring or connectors	- Replace or repair faulty wiring or connectors
	Passenger s side Airbag Igniter -N131- faulty	- Replace Passenger s side Airbag Igniter -N131-
		- Read measuring value block ⇒ Page 01-36
00594		
Igniter circuit for airbag		
Short circuit	Faulty wiring or connectors to airbag units	- Read measuring value block ⇒ Page 01-36

VAG1551 printout	Possible cause	Corrective action
00595		
Crash data stored		- Replace control module
Short circuit	Short circuit in igniter circuits	- Replace control module - Replace or repair faulty wiring or connectors - Replace airbag unit and all faulty components
01280[1)]		
Driver s side airbag is disconnected	Driver s side airbag does not function	Control module was adapted
65535		
Control module faulty	Control module faulty	Replace control module

[1)] DTC is stored in memory only during activated adaptation.

01-31

Diagnostic Trouble Code (DTC) Memory, erasing, ending output

Requirements:

- Malfunction was repaired
- DTC memory was checked again

DTC Memory, erasing

Rapid data transfer **HELP**
Select function

Indicated in display

- Press buttons -0- and -5- to select function 05 "Erase DTC Memory".

Rapid data transfer
05 - Erase DTC Memory

Indicated in display

- Press -Q- button to confirm entry..

Rapid data transfer →
DTC memory was not erased!

Indicated in display

- Press → button.

Rapid data transfer **HELP**
Select function

Indicated in display

Note:

CAUTION!
DTC memory was not interrogated

- *If this is shown in the display, the program sequence is not correct.*
- *Always follow exact checking sequence: first interrogate DTC memory, then erase DTC memory.*

01-32

DTC Memory, ending output

- Press buttons -0- and -6- to end output.

Rapid data transfer **06 - Ending output**		<	Indicated in display

- Press -Q- button to confirm entry.

Rapid data transfer **Enter address word**	**HELP**	<	Indicated in display

- Switch ignition off.
- Disconnect Data Link Connectors (DLC) to Scan Tool VAG1551.

01-33

Airbag Control Module, coding with VAG1551 Scan Tool

Coding is only possible when a new control module is used.

- Connect VAG1551 Scan Tool.
- Switch ignition on.
- Press button -1- for "Rapid data transfer" mode.

Rapid data transfer HELP
Enter address word

Indicated in display

- Press buttons -1- and -5- to select address word 15 "Airbag".

Rapid data transfer
15 - Airbag

Indicated in display

- Press -Q- button to confirm entry.

The airbag MIL -K75- continues to light up.

6N0 909 603 H AIRBAG VW 2 V00 →
Coding 00072 WSC12345

Indicated in display (for current control module versions see parts catalog).

- Press → button.

Rapid data transfer HELP
Select function

Indicated in display

- Press buttons -0- and -7- to select function 07 "Code control module.

Rapid data transfer
07 - Code control module

Indicated in display

- Press -Q- button to confirm entry.

01-34

Control module coding

Enter code number (0--32000)

Indicated in display

- Enter code number according to table:

Vehicle options	Part number	Index	Code number
Driver s side airbag only	6N0 909 603	J	00074
Driver s and passenger s airbags	6N0 909 603	H	00072
Airbag with knee bar	6N0 909 603	G	00071

- Press -Q- button to confirm entry.

6N0 909 603 H AIRBAG VW2 V00

Coding 00072 WSC 12345

Indicated in display is the control module identification number with the appropriate letter index, the code number and the dealer code.

The coding is completed if the display contents is shown.

If the entered code number was not accepted by the control module, the following display appears:

Error →

Coding not accepted

Indicated in display

01-35

In this case the control module was not programmed with the necessary data; coding is then not possible.

The airbag MIL -K75- stays on.

Check whether the correct control module for the car was installed (compare part number and letter index) or whether an incorrect code number was entered.

End function:

- Press → button.

Rapid data transfer **Select function**	**HELP**	≺	Indicated in display - Press buttons -0- and -6- to end output. - Press -Q- button to confirm entry.
Rapid data transfer **06 - Ending output**		≺	Indicated in display The airbag MIL -K75- must go out after about 4 seconds.

01-36

Measuring value block, reading

CAUTION!

- ***Only inspect wiring visually.***
- ***Do not perform electrical continuity testing or measurements in the airbag ignition circuits.***
- ***Only check wiring with the ignition off.***

Rapid data transfer **Select function**	**HELP**	◄	Indicated in display - Press buttons -0- and -8- to select function 08 "Read measuring value block".
Rapid data transfer **08 - Read measuring value block**		◄	Indicated in display - Press -Q- button to confirm entry.
Read measuring value block **Enter display group number**	**HELP**	◄	Indicated in display

- Select display group number and press -Q- button to confirm entry.

Read measuring value block **1 2 3 4**	**1**	⮜	Indicated in display Explanations for the display contents is listed in the display group overview ⇒ Page 01-39 . If "correct" is shown in all display fields: - Press → button.
Rapid data transfer **Select function**	**HELP**	⮜	Indicated in display ***Note:*** *After finishing with function Read measuring value block , go to function Interrogate DTC Memory ⇒ Page 01-25 .*

Display group 001

Display group 001						
Read measuring value block 1			→	◀ Indicated on display		
xxxx	xxx	xxx	xxxx			
1	2	3	4	◀ Display fields	**Specified value**	**Evaluation**
				Driver s side belt tensioner	Not used for troubleshooting	
			Driver s side belt tensioner		Not used for troubleshooting	
		Driver s side Airbag Igniter			correct	⇒ Page 01-39
	Driver s side Airbag Igniter				correct	

Evaluation of display group number 001

Display field	Designation	Display contents	Correction
1	Driver s side Airbag Igniter -N95-	correct Trig. GND POS too small	- No malfunction found - Check wiring visually - Check connectors of applicable circuit for correct seating, at the same time watch display. If display changes to "correct", erase DTC memory - Disconnect connector for igniter for airbag unit Display changes to "too large" - Replace airbag unit Display remains on "too small" - Disconnect connector for connector for Airbag Spiral Spring Display changes to "too large" - Replace Airbag Spiral Spring Display remains on "too small" - Replace wiring harness
			Continue next page

Displayfield	Designation		Display contents		Correction
1			too large		- Remove connector from igniter for airbag unit - Connect connector for airbag igniter to inert igniter of VAS5056 ⇒ Page 01-43 . Display changes to "correct" - Replace airbag unit Display remains on "too large" - Remove connector for airbag spiral spring - Connect test box VAS5056 instead of airbag spiral spring to driver s side harness ⇒ Page 01-43 . Display changes to "correct" - Replace Airbag Spiral Spring -F138- Display remains on "too large" - Press button of VAS5056 Display remains on "too large" - Replace wiring harness
					Continue next page

Displayfield	Designation	Display contents	Correction
2	Passenger s side Airbag Igniter -N131-	correct Trig. GND POS too small too large	No malfunction found - Visually check wiring - Check connectors of applicable circuit for correct seating, at the same time watch display - If display changes to "correct", erase DTC Memory - Disconnect connector between adapter wire and airbag unit Display changes to "too large" - Replace airbag unit Display remains on "too small" - Replace wiring harness - Connect test box VAS5056 to passenger s side harness ⇒ Page 01-43 . - Press button of VAS5056 Display changes to "too small" - Replace airbag unit - Display remains on "too large" - Replace wiring harness
3	Not used for troubleshooting		
4	Not used for troubleshooting		

Display group 003

Read measuring value block 3			→	◀ Indicated on display		
xxxx	xxx	xxx	xxxx			
1	**2**	**3**	**4**	◀ Display fields	**Specified value**	**Evaluation**
				Driver s side belt buckle switch	Not used for troubleshooting	
			Driver s side belt buckle switch		Not used for troubleshooting	
		Passenger s side seat occupant recognition			Not used for troubleshooting	
	Supply voltage (B+)				correct	⇒ Page 01-42

Evaluation of display group number 003

Display field	Designation	Display contents	Correction
1	Supply voltage (B+)	correct too small too large	- Supply voltage (B+) min. 10.5 Volt - Check Generator ⇒ Electrical Wiring Diagrams, Troubleshooting, Component Locations - Check wiring visually
2+3+4	Not used for troubleshooting		

01-43

Test box VAS5056

With test box VAS5056 it is possible to test the individual airbag system components to determine which component is actually malfunctioning.

Note

Observe safety measures when working on airbag system ⇒ *Page 69-23* .

Test box VAS5056, connecting with driver s side airbag system components

Remove lower steering column switch trim

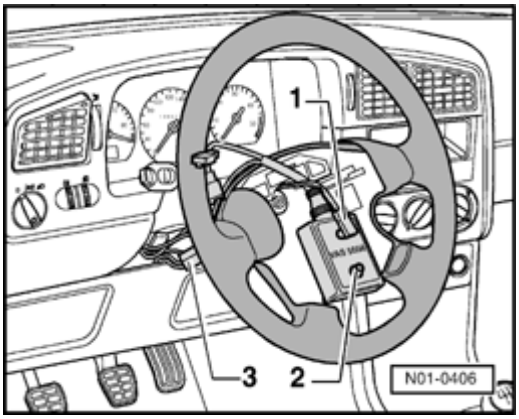

- Connect igniter connector to inert igniter -1- and disconnect harness to airbag spiral spring. Connect yellow dual connector -3- of VAS5056/1 with airbag harness.

1 - Connector on inert igniter

2 - VAS5056 button

3 - Connector for spiral spring/return spring with slip ring

01-44

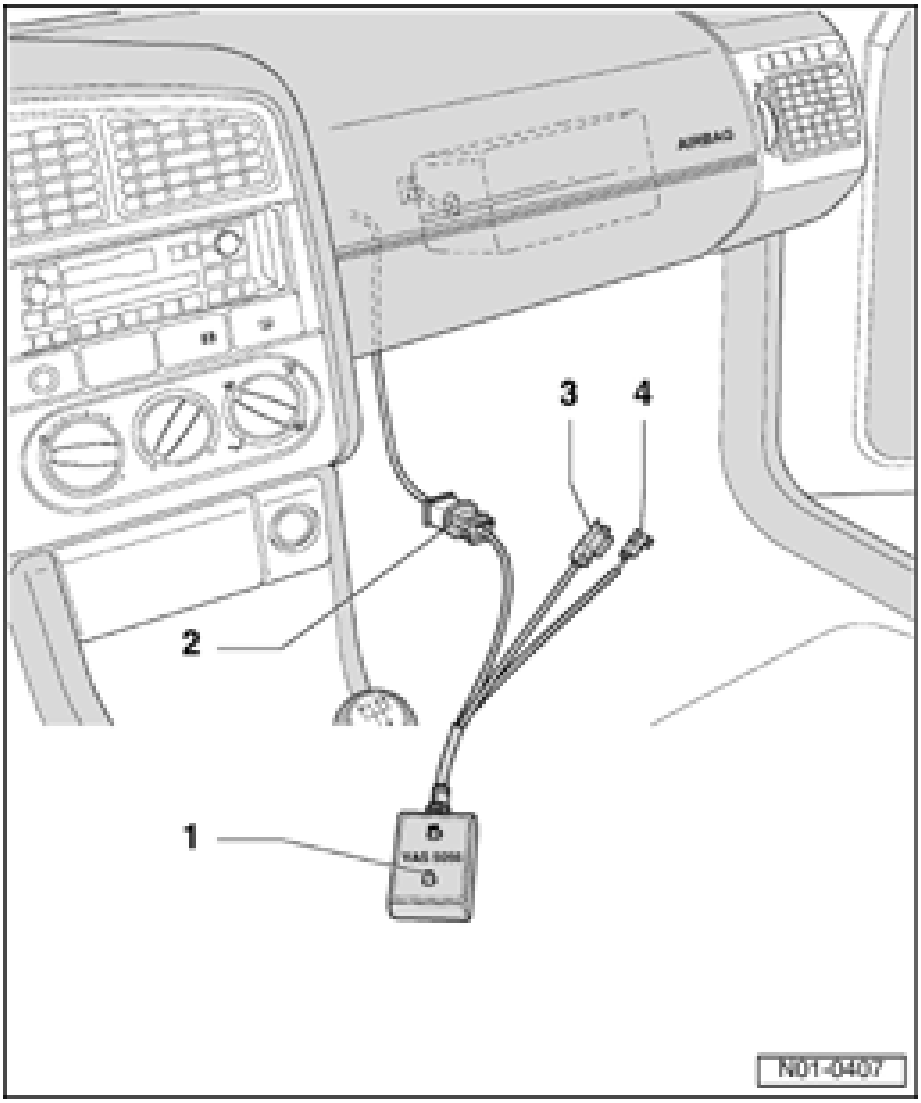

Test box VAS5056, connecting with passenger s side airbag system components

- Remove storage shelf on passenger s side ⇒ Page 70-11
- Disconnect harness connector to airbag unit. Connect yellow dual connector -2- of VAS5056/1 with passenger s side airbag harness

1 - VAS5056 button

2 - Connector for passenger s side airbag harness

3 - Connector (not used)

4 - Connector (not used)

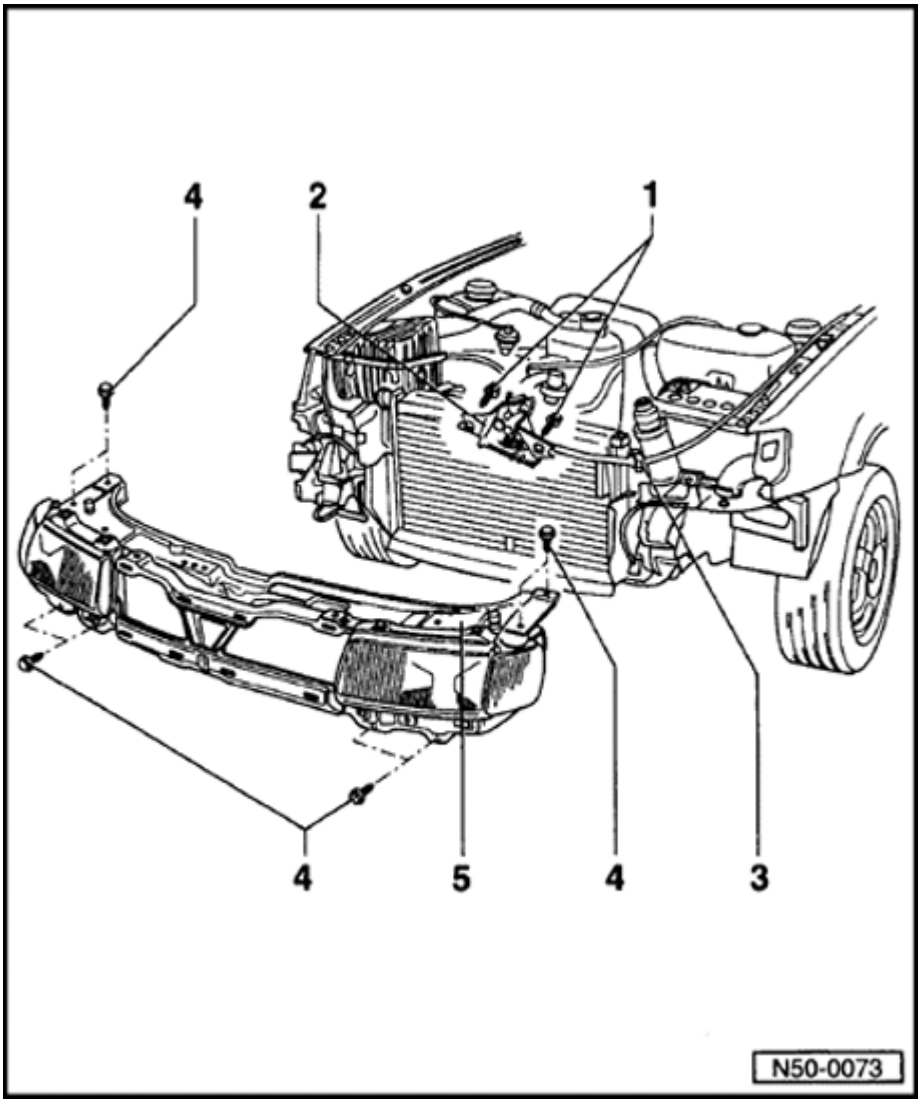

Body, front

1 - Self-locking bolt

- 12 Nm (9 ft lb)
- When re-using: Clean bolt thread with wire brush and nut thread with thread tap. Coat bolt with locking fluid D 185 400 A 2.

2 - Lock

3 - Clip

4 - Self-tapping screw

- 5 Nm (44 in. lb)

5 - Lock carrier

- Removing and installing ⇒ Page 50-2

Lock carrier, removing and installing

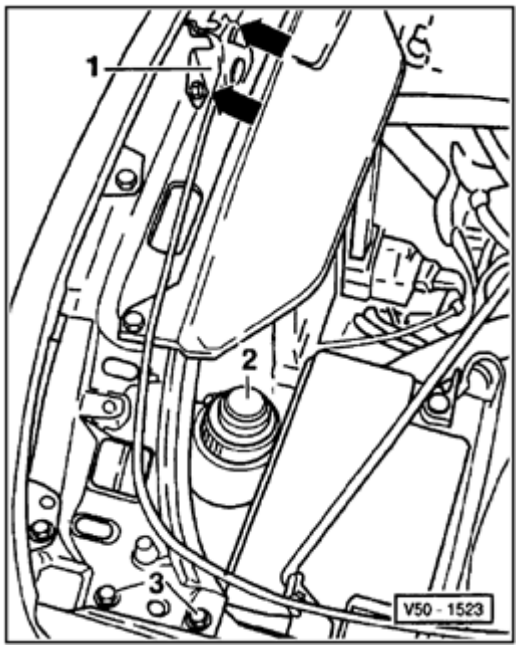

Removing

- Remove front bumper ⇒ Page 63-1
- Remove radiator grille and trim ⇒ Page 66-9
- Remove lock -1- and free Bowden cable.
- Disconnect connector for headlight and front turn signal light.
- Loosen clip holding hydraulic fluid reservoir -2- .
- Remove A/C refrigerant hose from retaining clip.
- Remove bolts -3- .

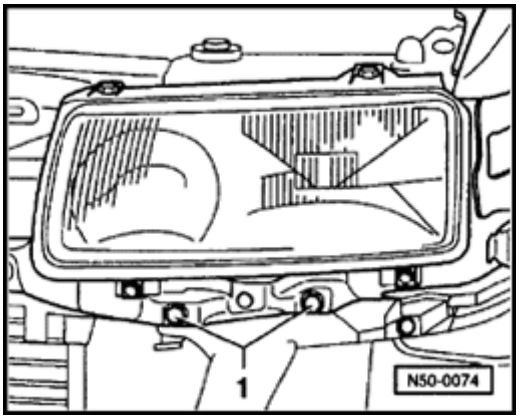

- Remove bolts -1-.

50-3

Front fender, removing and installing

Removing

- Remove front bumper, guide part, wheel hose liner, radiator grille and trim ⇒ Page 63-1 and ⇒ Page 66-9 .

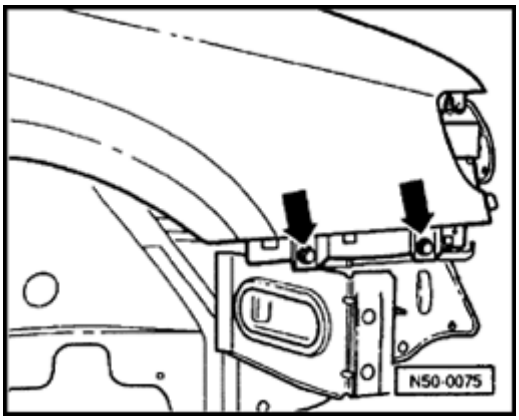

- Press bumper cover down (with rubber wedges or similar) in area of outer bolts and remove bolts. To avoid scratches, tape off areas with masking tape.

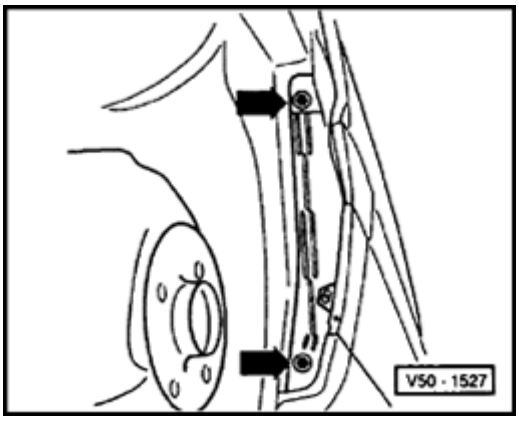

- Remove bolts (arrows) from wheel housing.

50-4

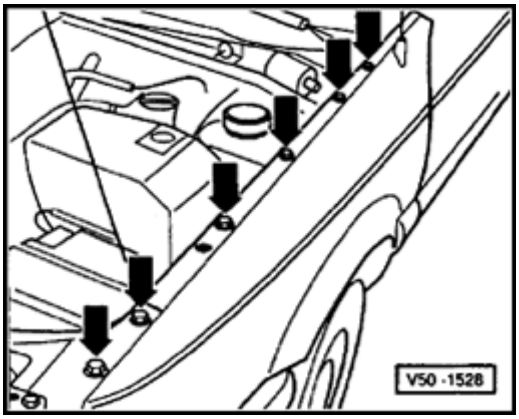

- Remove bolts (arrows).

Installing

⇒ *Observe corrosion protection measures as specified in the Repair Manual, Body Collision Repair.*

- Before installing fender, install zinc packing AKL 381 035 50 to mounting points in contact area of wheel house A-pillar.

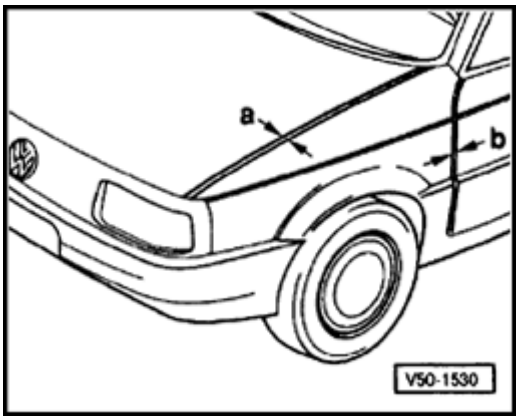

- Adjust gaps by moving fender.
  - Gap sizes: a = 5 ±1 mm, b = 5 ±1 mm.

Note:

Do not pinch water drain hose for power window.

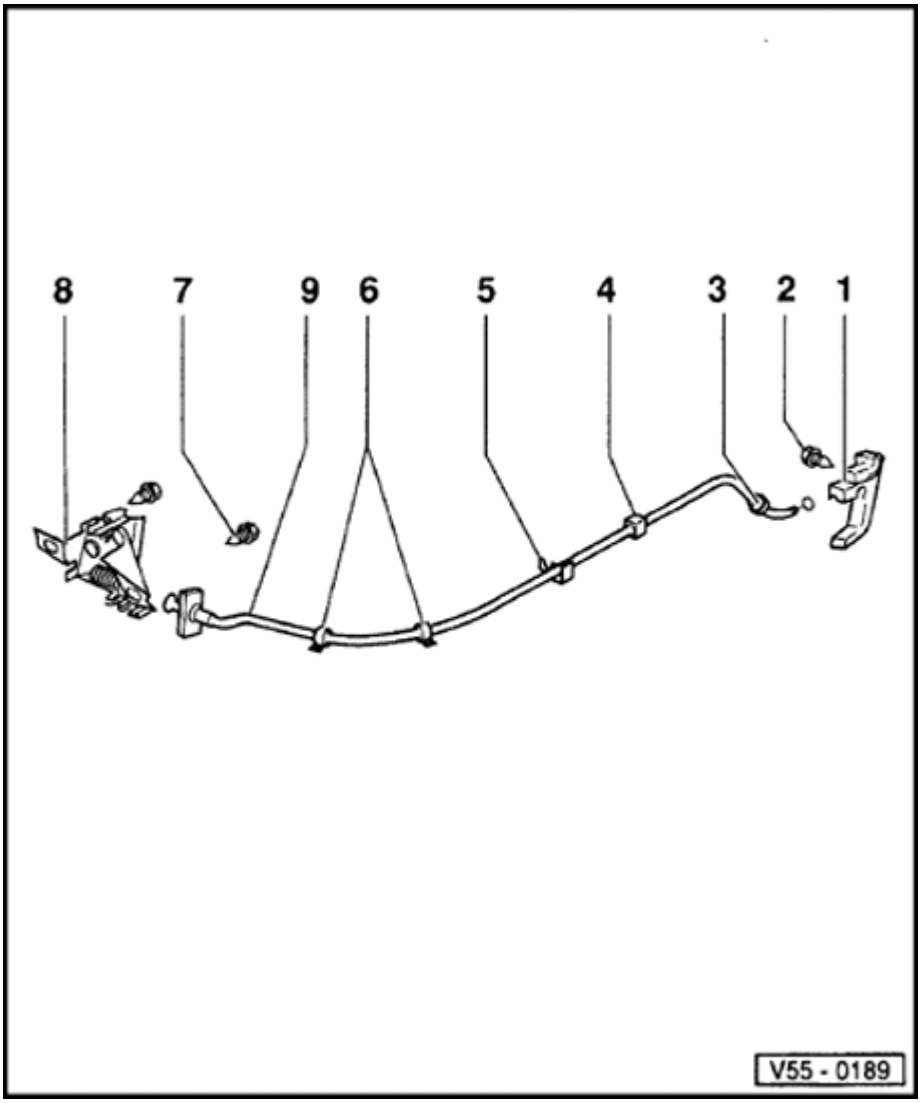

Hood

Hood lock cable, removing and installing

1 - Release lever

- Cable attached.

2 - Self-tapping screw

3 - Grommet

4 - Clip

5 - Guide

6 - Cable clip

7 - Bolt, self-locking

- 12 Nm (9 ft lb)
- When re-using: clean bolt threads with wire brush and nut threads with thread tap. Coat bolt with locking fluid D 185 400 A 2.

55-2

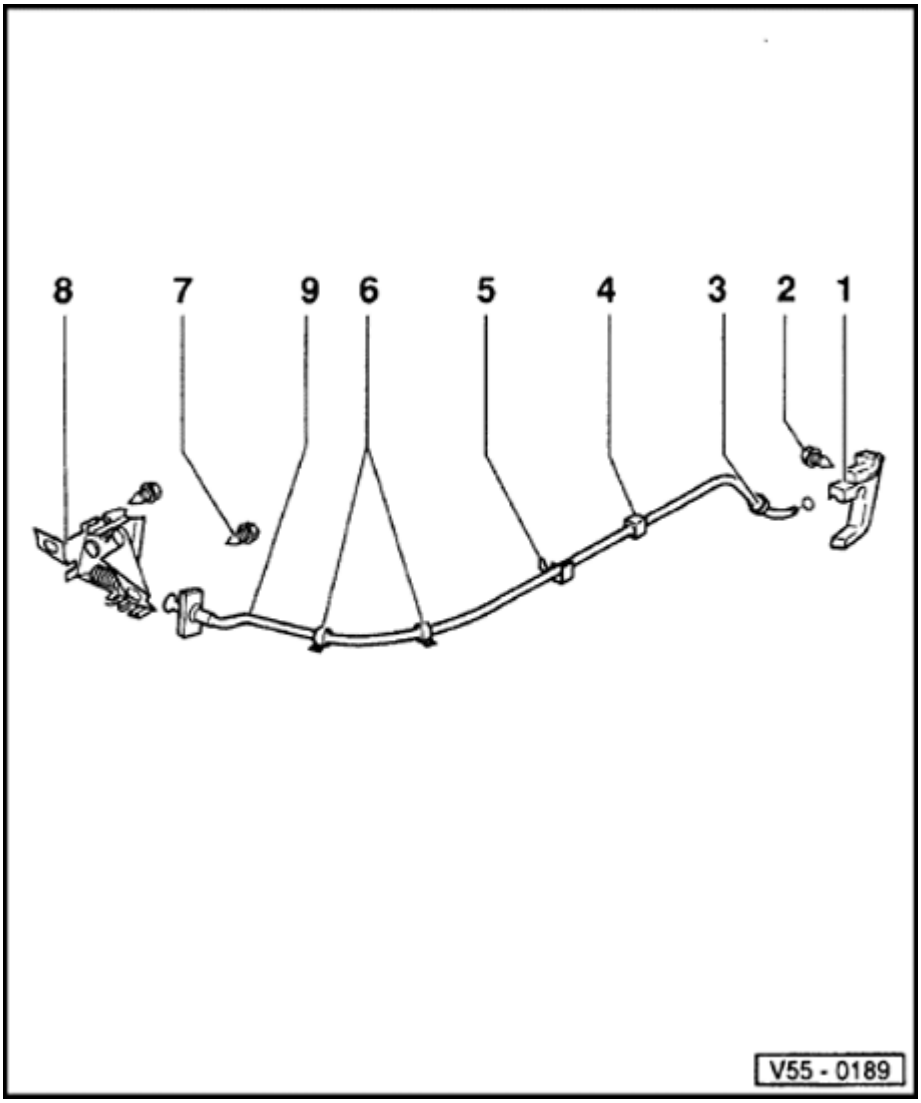

8 - Lock

- Cable attached.

9 - Cable

- Replacing: Remove release lever and lock, remove cable.
- Attach string or similar, about 1000 mm (1 yard) long to nipple of cable (release lever) and pull cable out from engine compartment side.
- Use string or similar for pulling cable in.

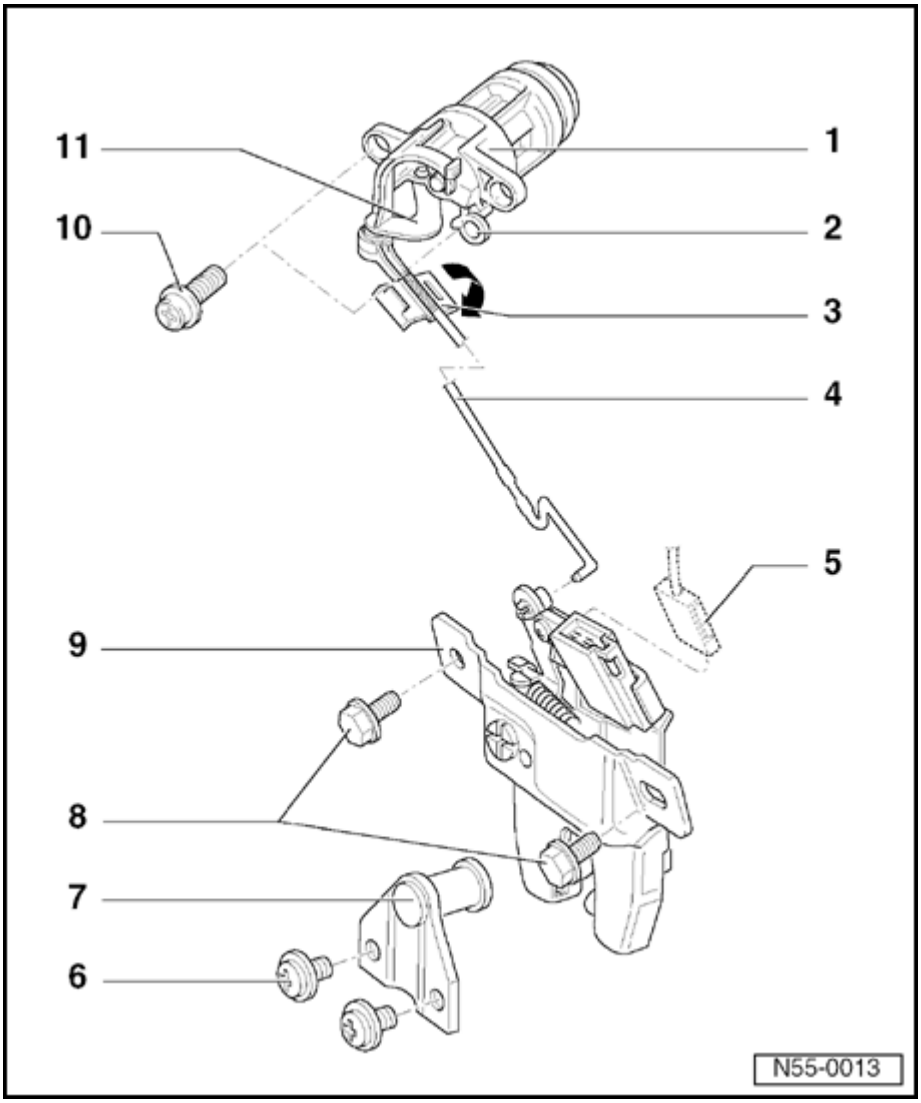

Rear lid

Rear lid lock, removing and installing (Sedan)

1 - Lock cylinder housing

- Remove rear trim panel before removing lock cylinder housing.
  - Remove screw - 10 - , unclip hinge sleeve - 3 - from relay lever - 11 -.
- For central locking system also unclip operating rod.
- Remove lock cylinder ⇒ Page 55-8

2 - Rod clip

55-4

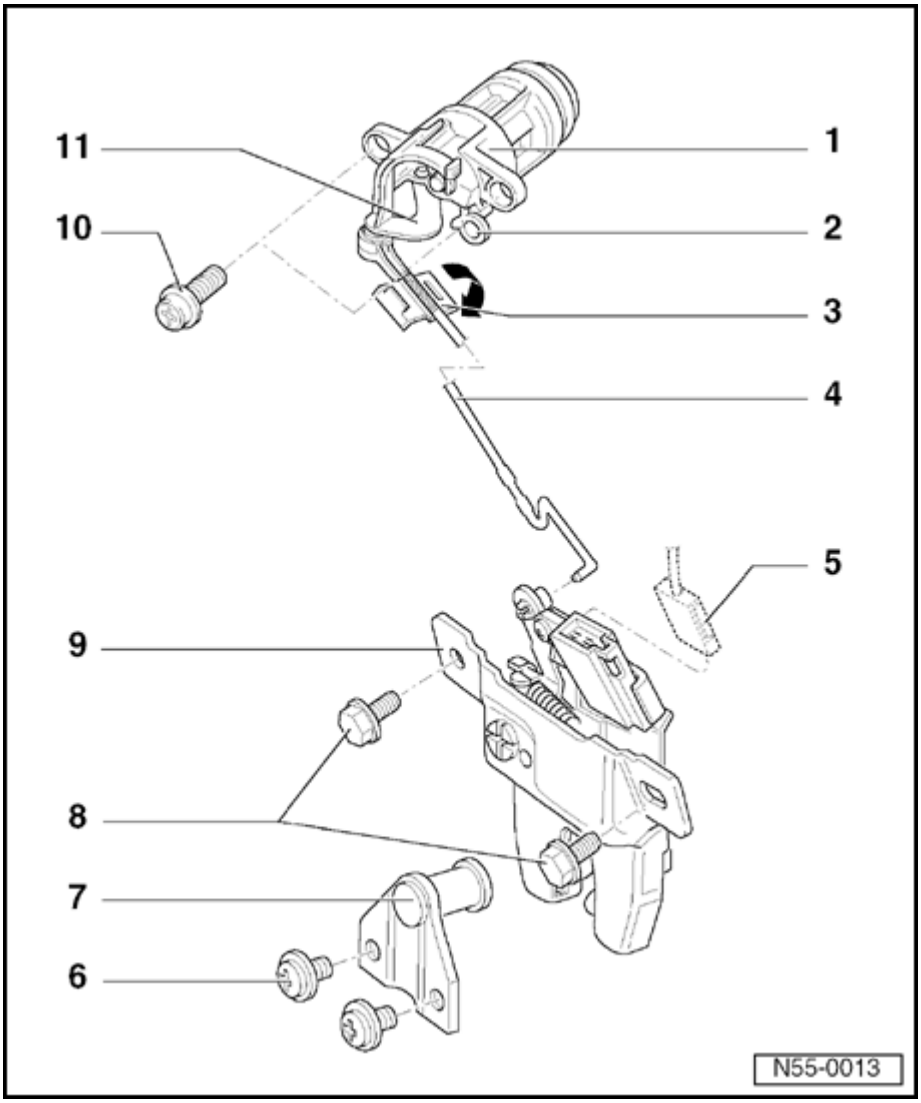

3 - Connector sleeve

- When installing pull rod, press relay lever - 11 - against lock cylinder and clip connector sleeve together.

4 - Pull rod

- Press relay lever - 11 - against stop and insert pull rod stress-free.

5 - Connector for luggage compartment light switch

6 - Bolt

- 7 Nm (62 in. lb)

7 - Locking plate

8 - Bolt

- 7 Nm (62 in. lb)

9 - Lock

10 - Screw

- 7 Nm (62 in. lb)

11 - Relay lever

55-5

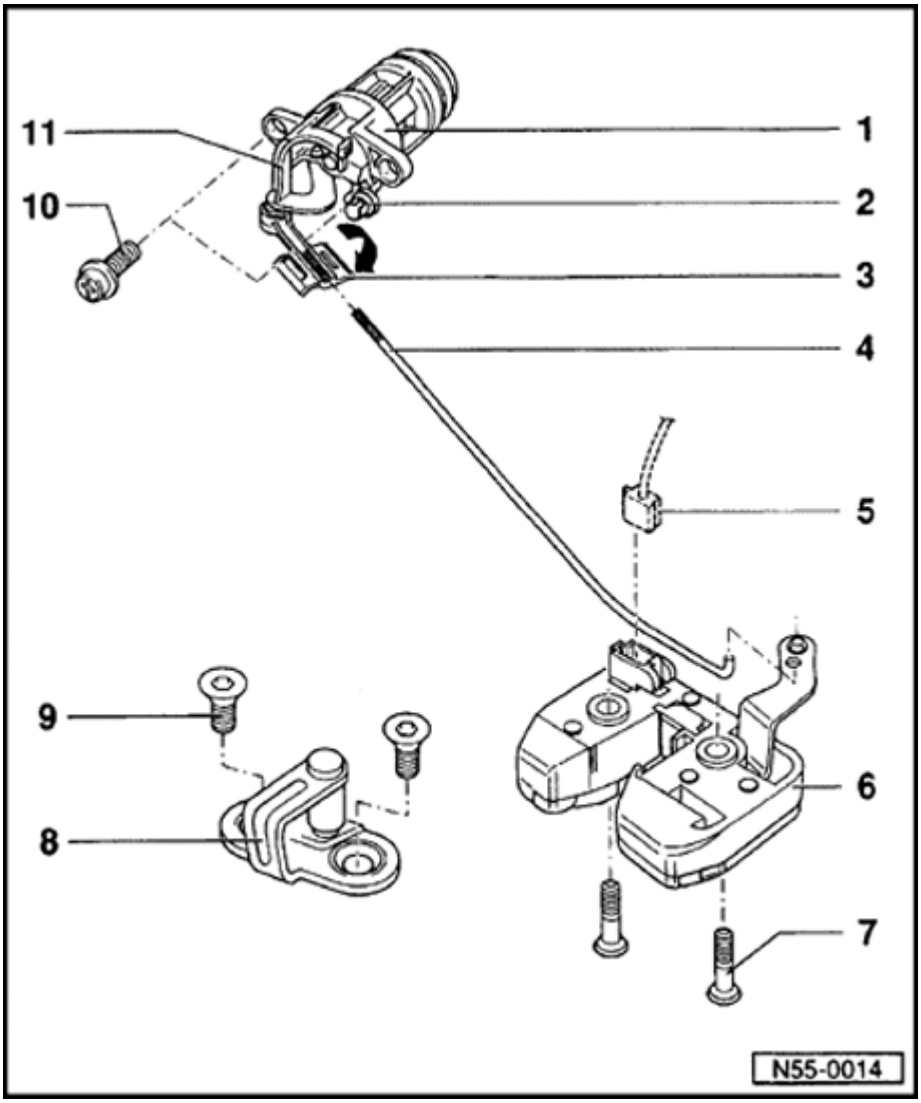

Rear lid lock, removing and installing (Wagon)

1 - Lock cylinder housing

- Remove rear trim panel before removing lock cylinder housing.
  - Remove screws - 10 -, unclip connector sleeve - 3 - from relay lever - 11 -.
- For central locking system also unclip operating rod.
- Remove lock cylinder ⇒ Page 55-8

2 - Rod clip

55-6

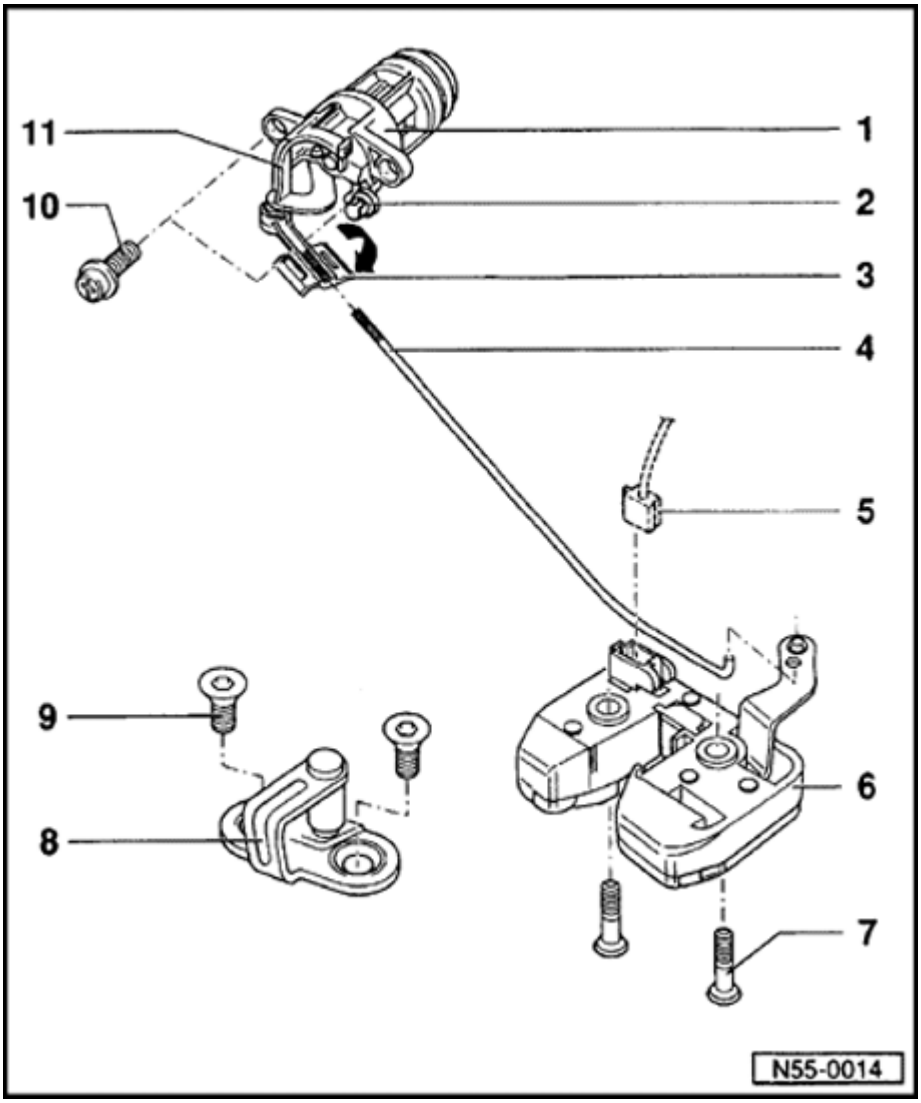

3 - Connector sleeve

- When installing pull rod, press relay lever against lock cylinder and clip connector sleeve together.

4 - Pull rod

- Press relay lever - 11 - against stop and insert pull rod stress-free.

5 - Connector for rear compartment light switch

6 - Lock

- Before installing lock, attach connector and clip pull rod in (see item - 4 -).

7 - Bolts

- 23 Nm (17 ft lb)

8 - Locking plate

55-7

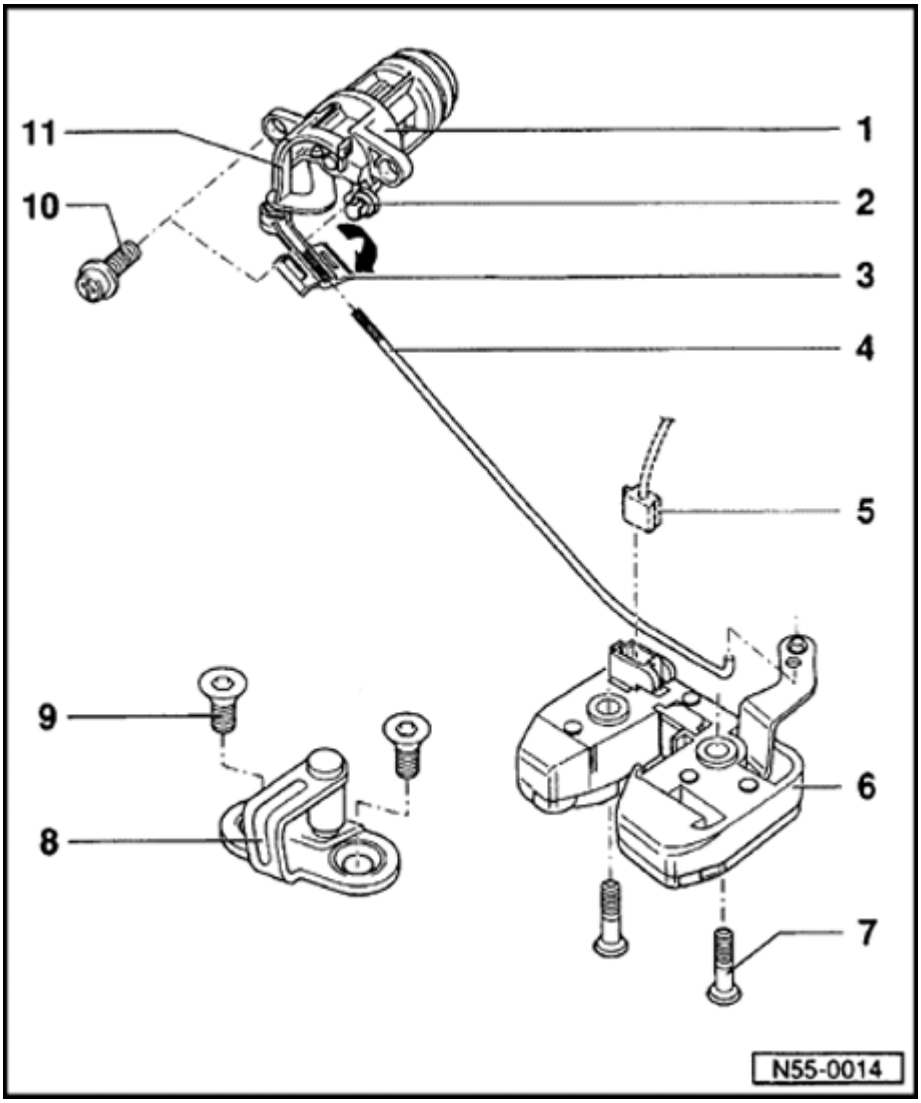

9 - Bolt

- 23 Nm (17 ft lb)

10 - Screw

- 7 Nm (62 in. lb)

11 - Relay lever

- 6 Nm (53 in. lb)

55-8

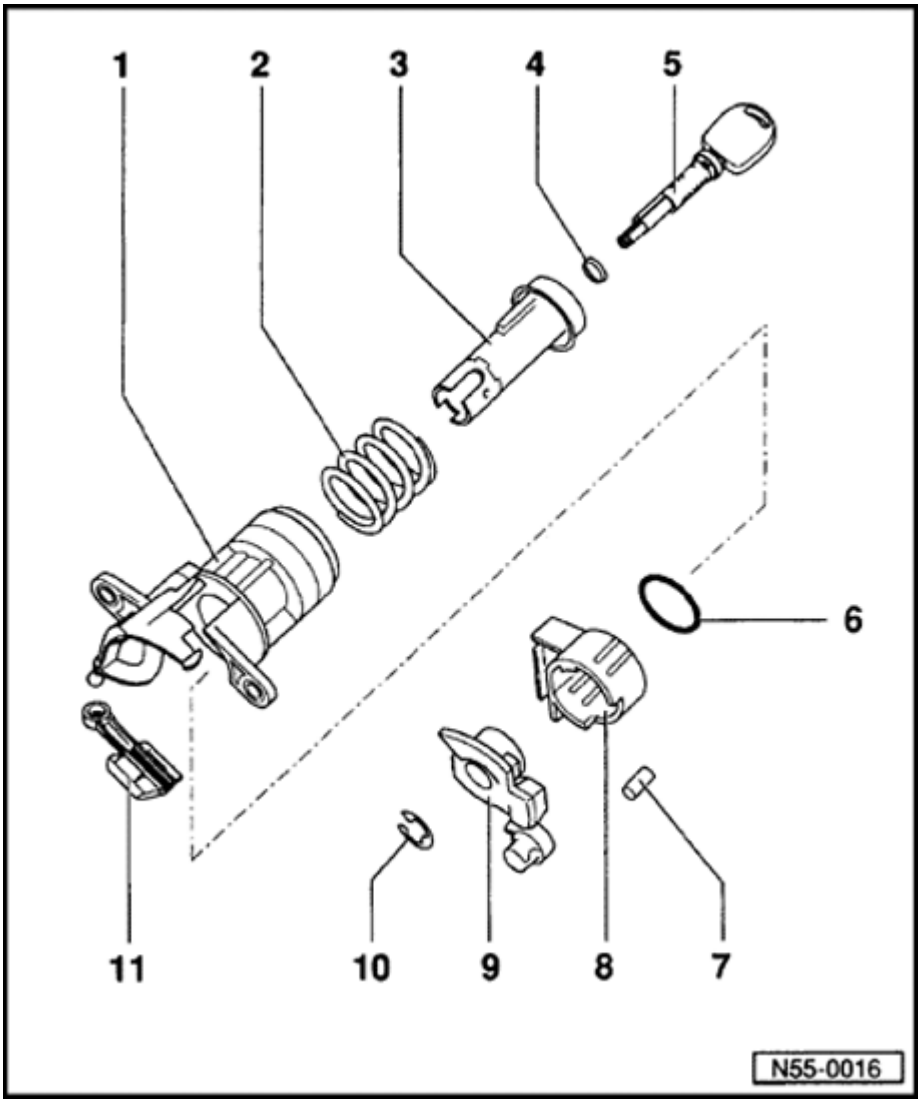

Lock cylinder, removing and installing

1 - Lock cylinder housing

- Removing ⇒ Page 55-3 and ⇒ Page 55-5

2 - Spring for push-button

3 - Push-button

4 - Sealing ring

5 - Lock cylinder

- Remove lock cylinder only with key inserted.

6 - Sealing ring

7 - Guide cylinder

55-9

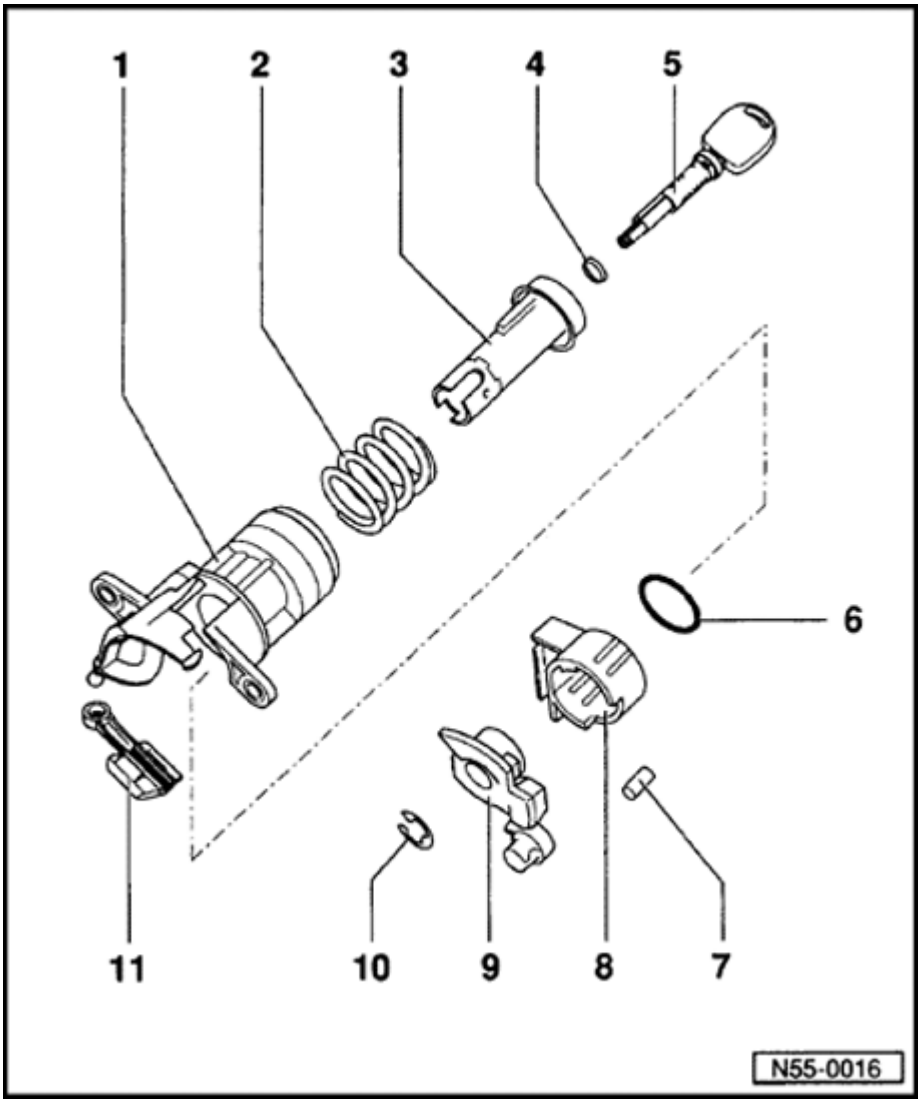

8 - Lock cylinder, lower part

- Removing: press out circlip - 10 -, press relay lever - 9 - outward

9 - Relay lever

10 - Circlip

11 - oint bushing

55-10

Gas strut, removing

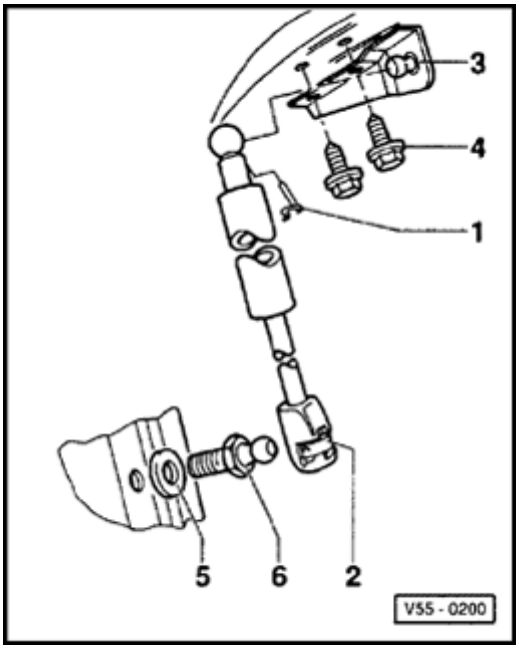

- Support tailgate.
- Remove retaining clip -1-.
- Lift retainer -2- with screwdriver and pull gas strut from ball joint.

Note:

If you are reusing the gas strut, do not take out retainer -2- completely or the retainer will be damaged..

3 - Mounting bracket

4 - Bolt, 7 Nm (62 in. lb)

5 - Sealing washer

6 - Ball joint, 20 Nm (15 ft lb)

55-11

Gas strut, emptying

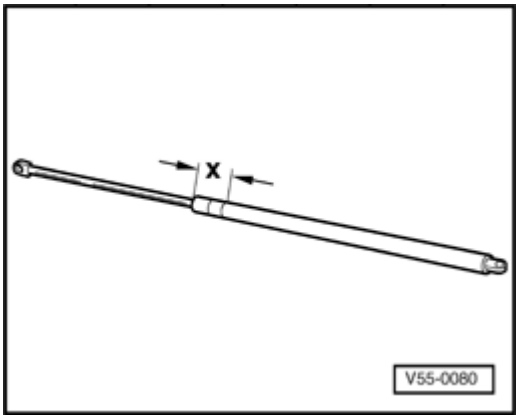

- Clamp gas strut in vice in area x = 50 mm.

WARNING!

- ***Only clamp gas-filled strut in designated area.***
- ***Wear protective goggles when sawing gas strut.***

- Saw through cylinder of gas strut within first third of total length , using piston rod end of cylinder as reference point.

Notes:

- *Cover area of saw cut with a rag.*
- *Dispose of oil and rag properly..*

55-12

Rear lid springs, removing and installing

- Open rear lid and secure with support.

- Move jaws of special tool 3072 as closely together as possible by turning spindle counter-clockwise.

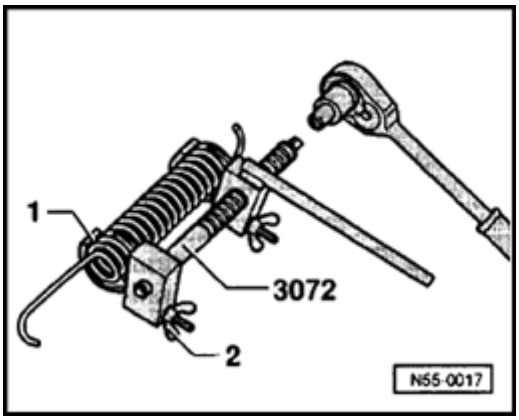

- Align tool 3072 over complete length of spring (spindle hex points toward luggage compartment opening) and press jaws between spring coils.
- Install retainers -1- over spring and tighten wing nuts -2- to stop.
- Expand spring with special tool 3072 by turning spindle clockwise until spring can be unhooked.

Installation hints:

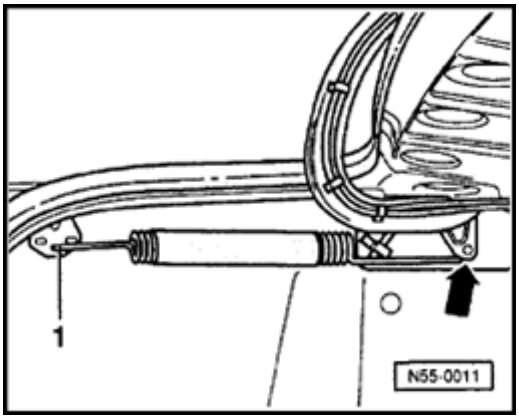

- Install spring to hinge pin -arrow-.
- Hook spring into center hole -1- of body plate.

55-13

Tailgate, adjusting (Wagon)

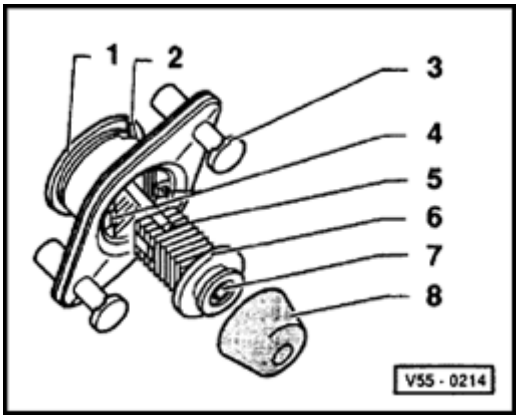

1 - Threaded sleeve (left-hand thread)

2 - Spacer web

3 - Spreader pins with disassembling slot

4 - Detent lugs for basic setting

5 - Recess for detent lugs

6 - Detent slide

7 - Clamping screw

8 - Rubber buffer

- Pry out spreader pin with small screw driver and take out adjusting stop from tail gate.
- Remove rubber buffer and unscrew clamping screw (socket head screw 3 mm) to edge of detent slot.

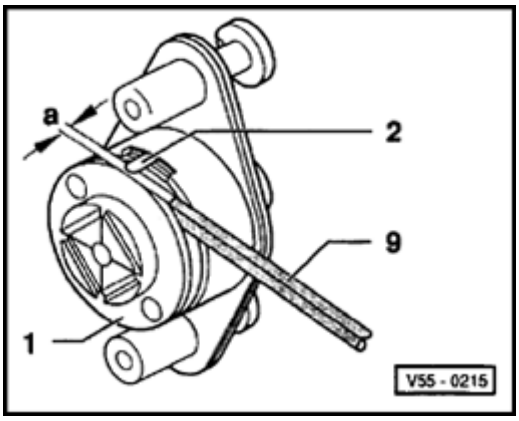

- Adjust threaded sleeve -1- (left-hand thread) to clearance of a = 3 mm. Check clearance with hex socket wrench -9-. Reinstall rubber buffer.

55-14

Note:

When new, set the adjustment stop to a clearance of 3 mm. The spacer web -2- rests against the threaded sleeve -1-.

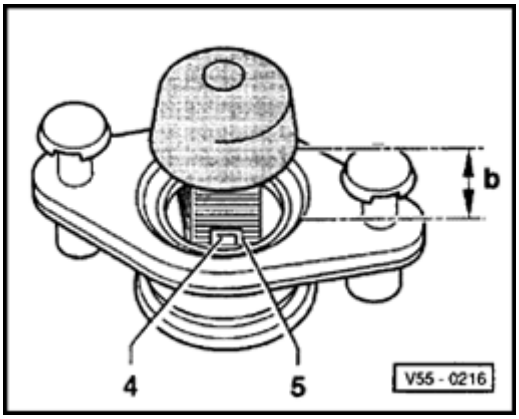

- Pull out detent slide and press in again as far enough until locking lugs -4- engage in recess -5-.

Clearance between housing and rubber buffer b = 10 mm.

- Insert adjusting stop, press in spreader pins.
- Close tailgate with light pressure.
- Open tailgate again.

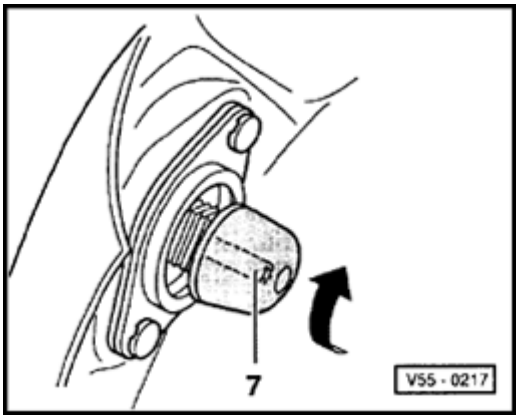

- Tighten clamping screw -7- with 1 Nm (9 in. lb).

55-15

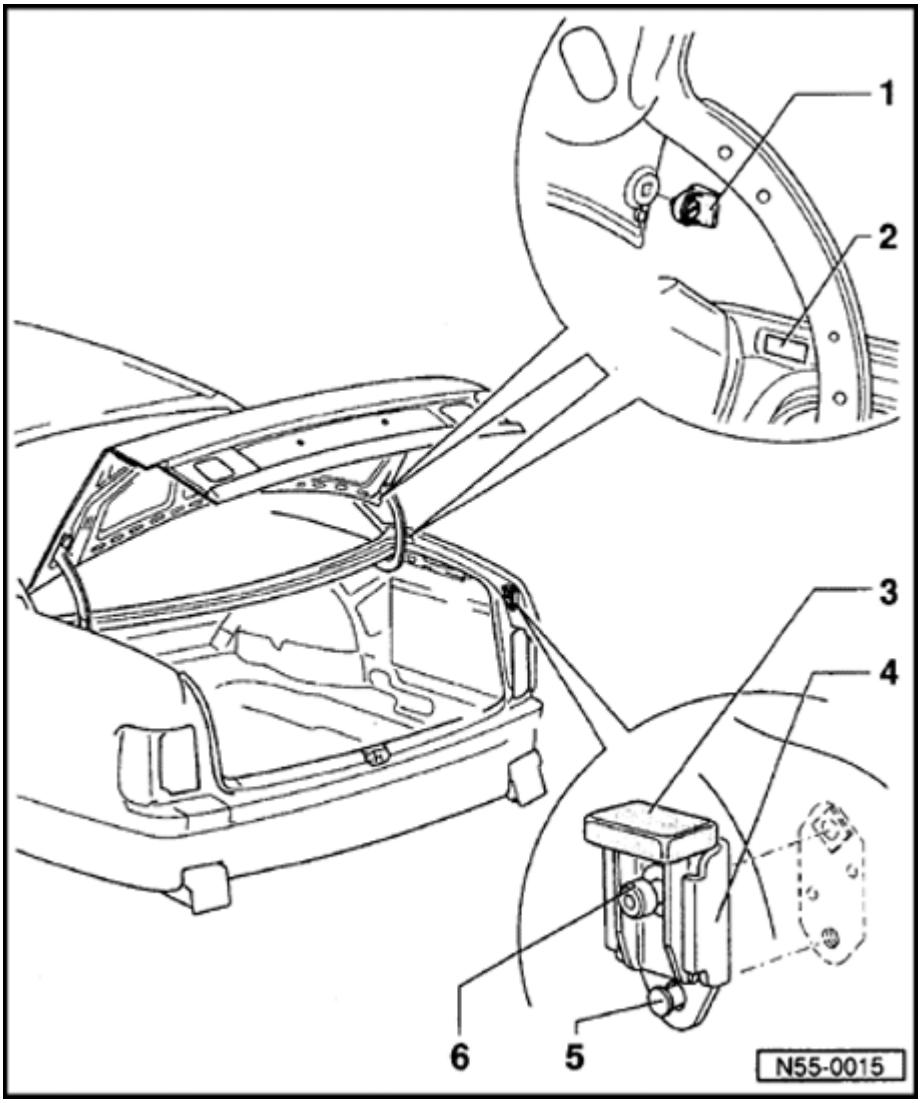

Rear lid, adjusting (Sedan)

- Rear lid is guided by the slide plate -2- and the spacer buffer -1-.
- Install stop buffer -4- and press in spreader pin -5-.
- Lightly tighten bolt -6- and push slide piece -3- upward.
- Close rear lid using light pressure until it aligns with side part.
- Open rear lid and tighten bolt -6-.

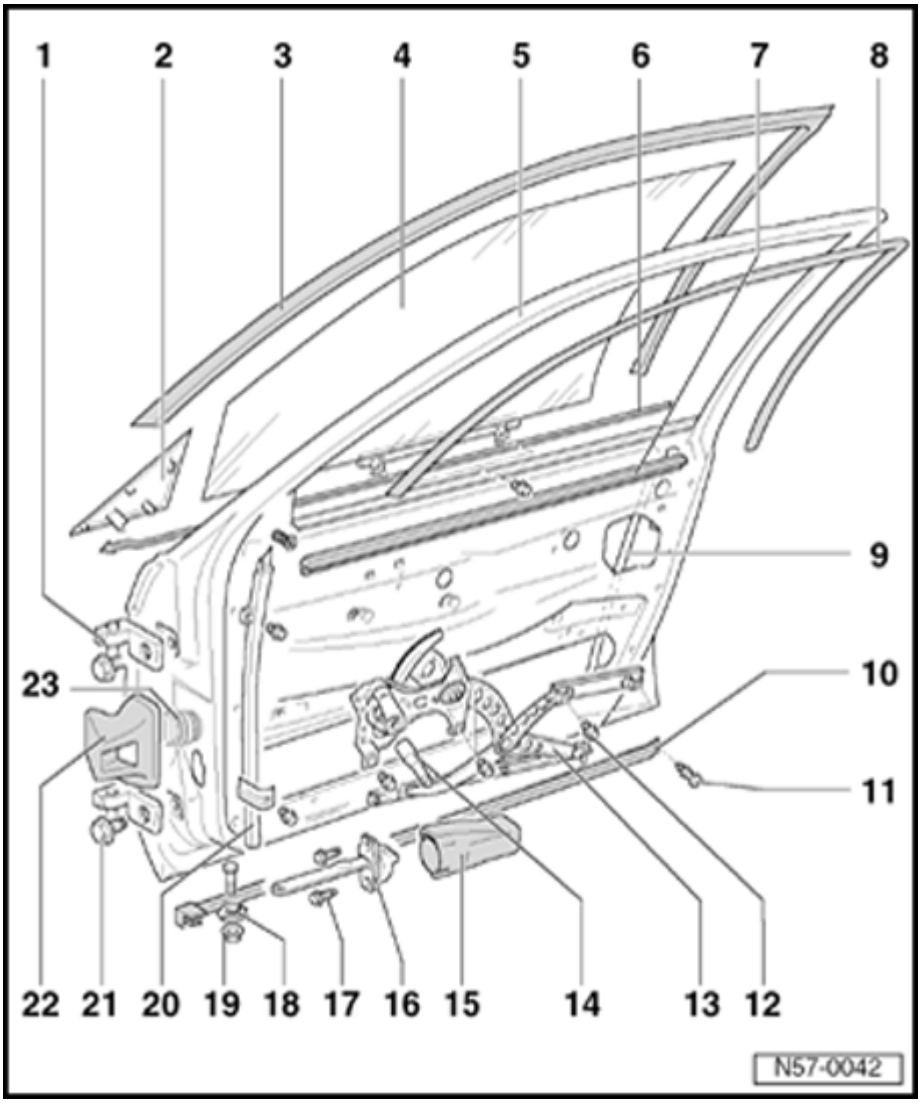

Front door assembly

Front door, servicing

Note:

The door side reinforcement cannot be removed.

1 - Door hinge

- Bolted to door, inserted toward A-pillar and secured with grub screw.

2 - Trim plate

3 - Outer window channel

- Inserted into window frame.
- Cannot be removed without destroying it.
- Removing ⇒ Page 57-13
- Installing ⇒ Page 57-14

57-2

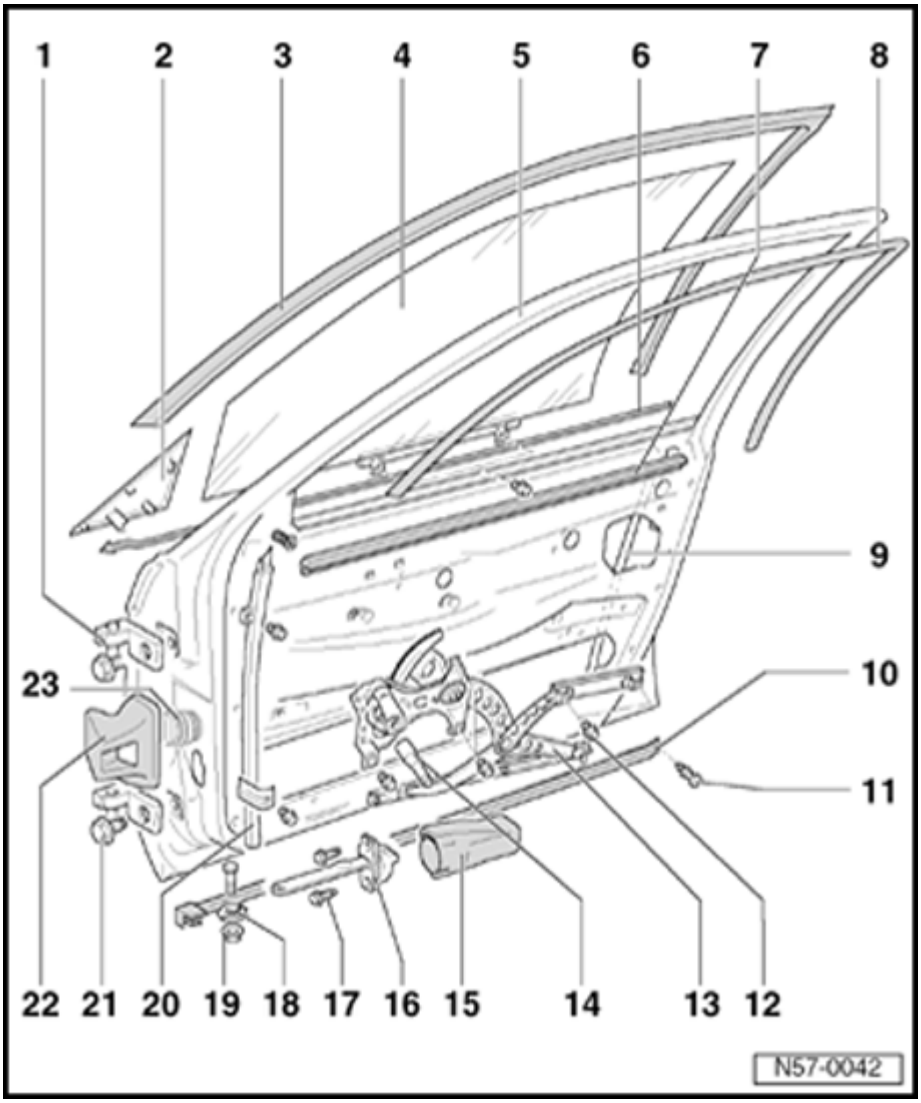

4 - Window glass

- Removing ⇒ Page 57-11
- Installing to window regulator ⇒ Page 57-12
- Lift channel on glass, dimension ⇒ Page 57-15

5 - Door

- Removing and Installing ⇒ Page 57-9
- Adjust at hinge within oversized holes.

6 - Outer window slot seal

- Pushed onto flange.

7 - Inner window slot seal

- Pushed onto flange.

8 - Inner window channel

- Pushed onto flange.

57-3

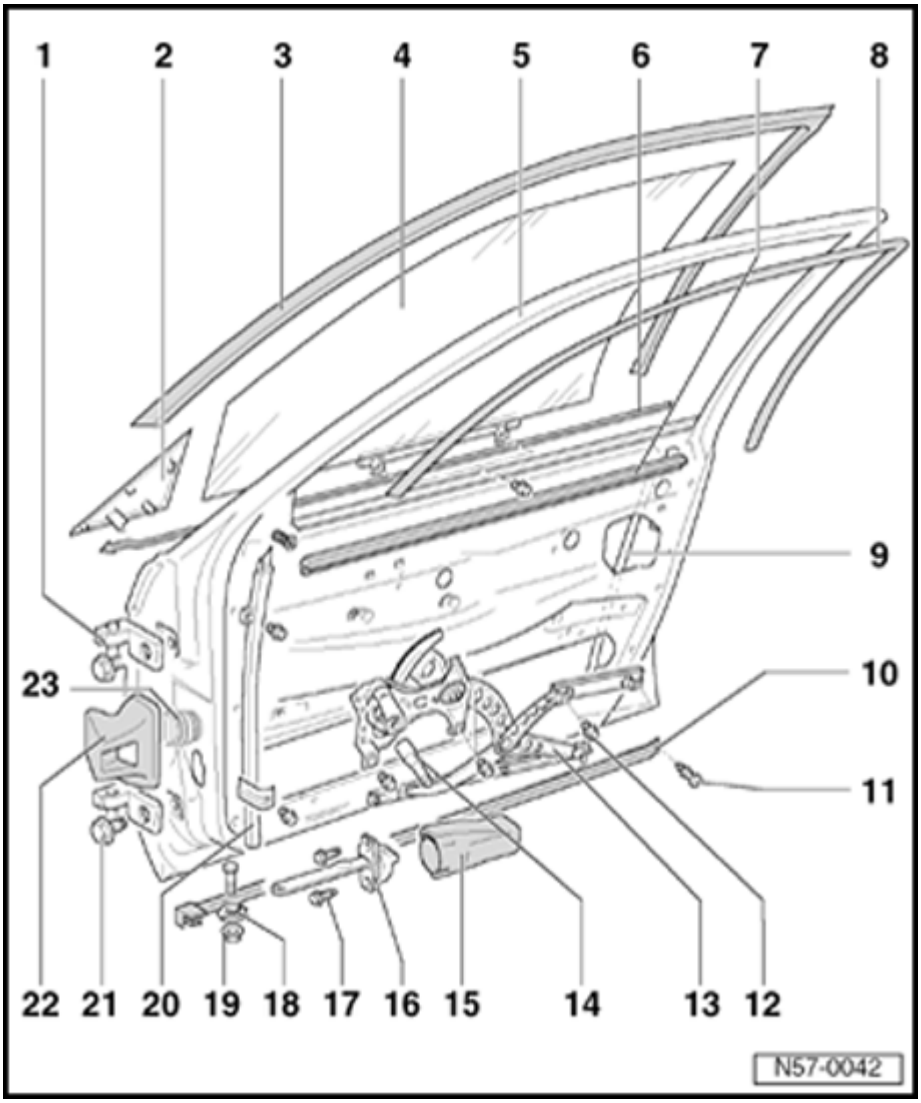

9 - Window channel, rear

10 - Seal

- Outer securing clip additionally bonded.

11 - Clip

- two-part

12 - Bolt

- 7 Nm (62 in. lb)

13 - Window regulator

- Removing and Installing ⇒ Page 57-10
- Installing glass to window regulator ⇒ Page 57-12

14 - Sleeve without ridge

- Before removing window regulator, remove sleeve.

15 - Door check strap boot

16 - Door check strap

57-4

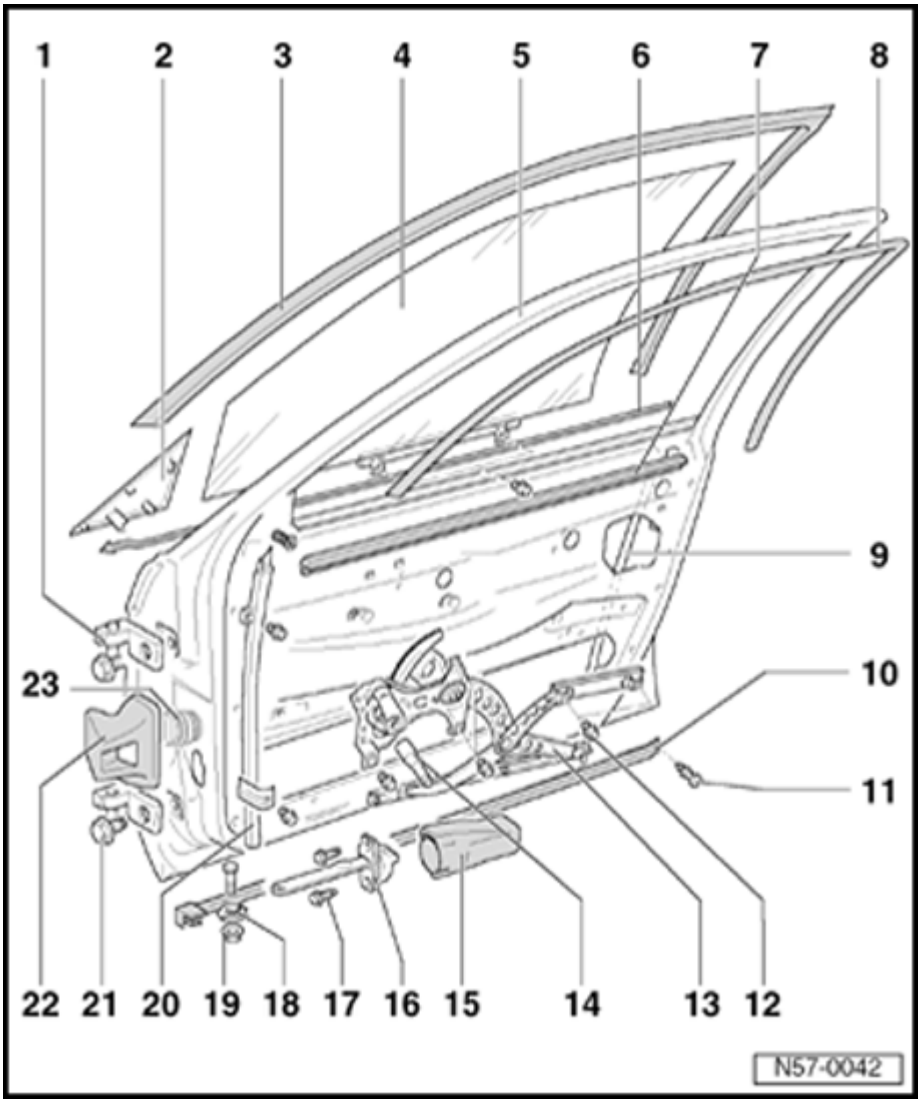

17 - Bolt

- 7 Nm (62 in. lb)

18 - Clip

19 - Locking nut

- 6.5 Nm (58 in. lb)

20 - Window channel, front

- Remove downward and toward inside of door.

21 - Bolt

- 55 Nm (41 ft lb)

22 - Door check strap cover

- Self-adhesive, glued to A-pillar.

23 - Multi-pin connector

- Separation point for all electrical and pneumatic connections.
- Remove coupling nut and pull off.

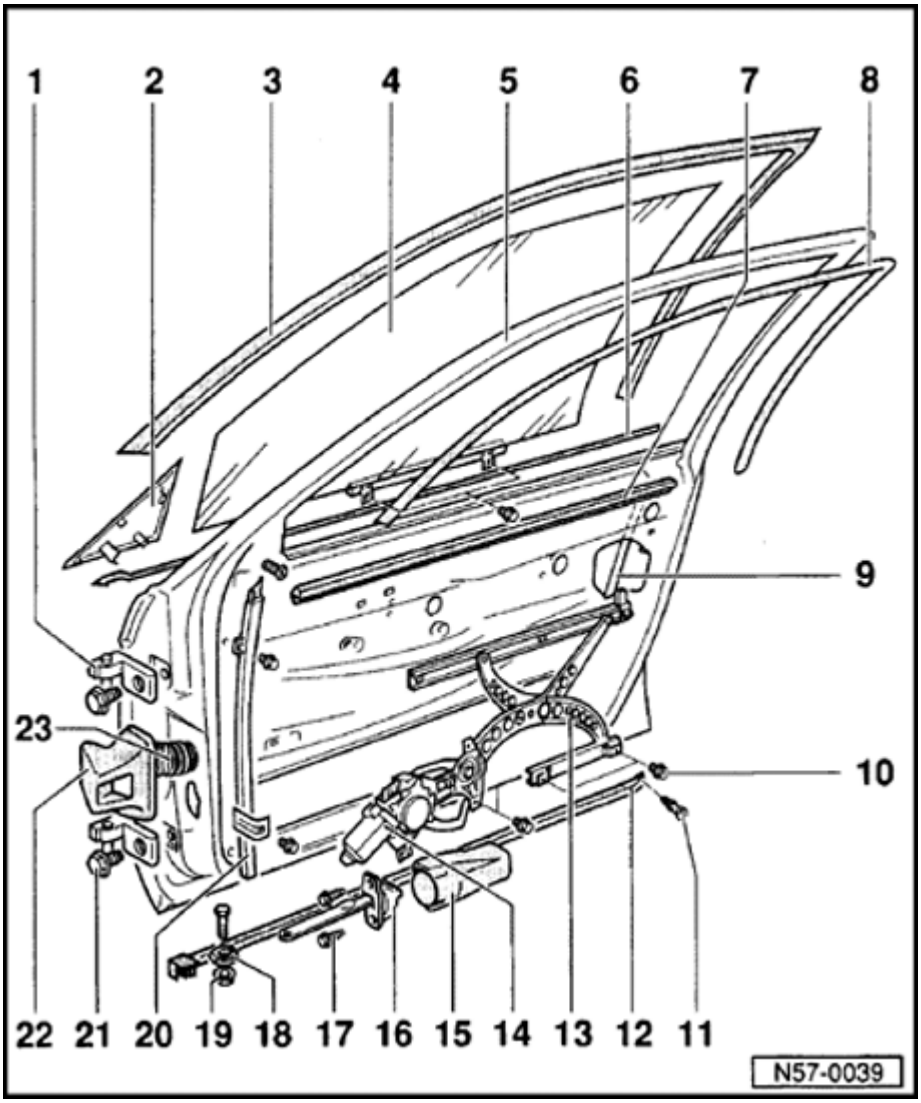

Front door assembly (with power window)

Note:

The door side reinforcement cannot be replaced

1 - Door hinge

- Bolted to door, inserted toward A-pillar and secured with grub screw.

2 - Cover

3 - Outer window channel

- Inserted into window frame
- Cannot be removed without destroying it.
- Removing ⇒ Page 57-13
- Installing ⇒ Page 57-14

4 - Window glass

- Removing ⇒ Page 57-11
- Installing to window regulator ⇒ Page 57-12
- Lift channel to glass, dimension ⇒ Page 57-15

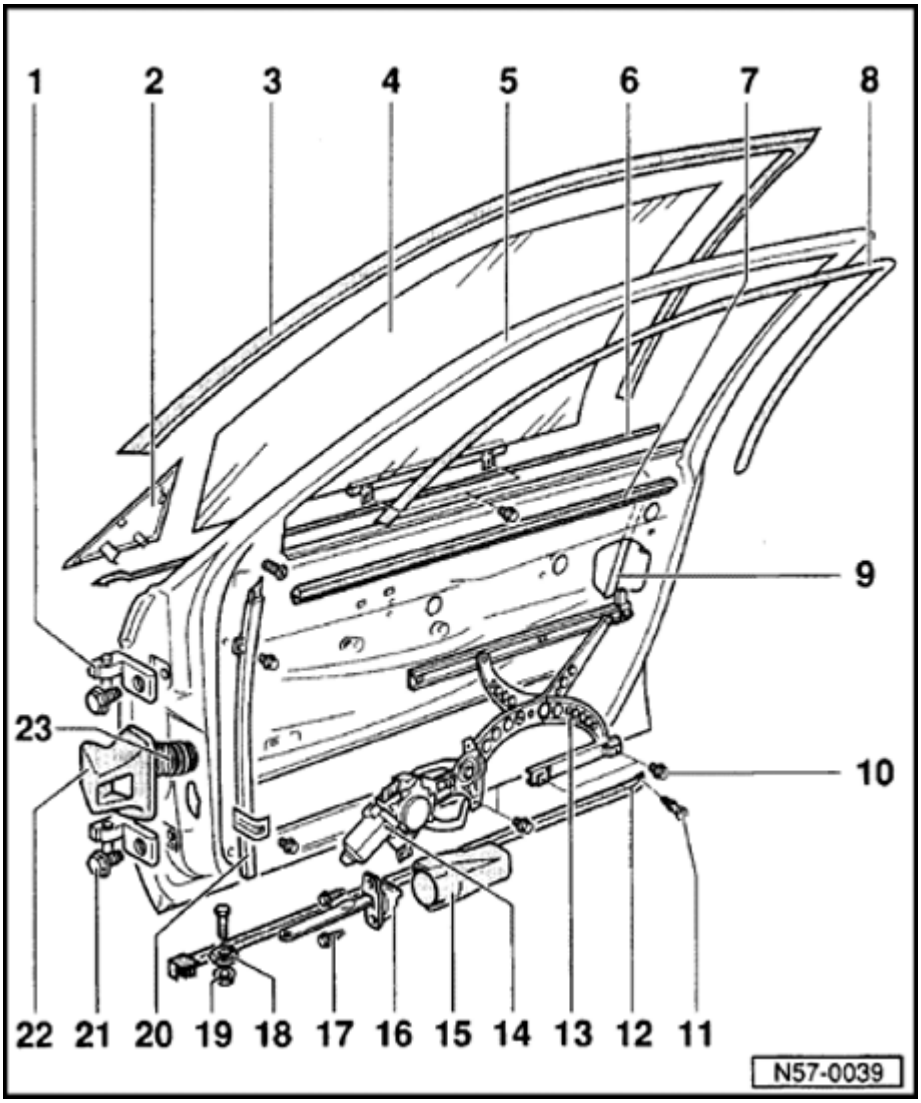

5 - Door

- Removing and Installing ⇒ Page 57-9
- Adjust at hinge within oversized holes.

6 - Outer window slot seal

- Pushed onto flange.

7 - Inner window slot seal

- Pushed onto flange.

8 - Inner window channel

- Pushed onto flange.

9 - Rear window channel

10 - Bolt

- 7 Nm (62 in. lb)

11 - Clip

- two-part

57-7

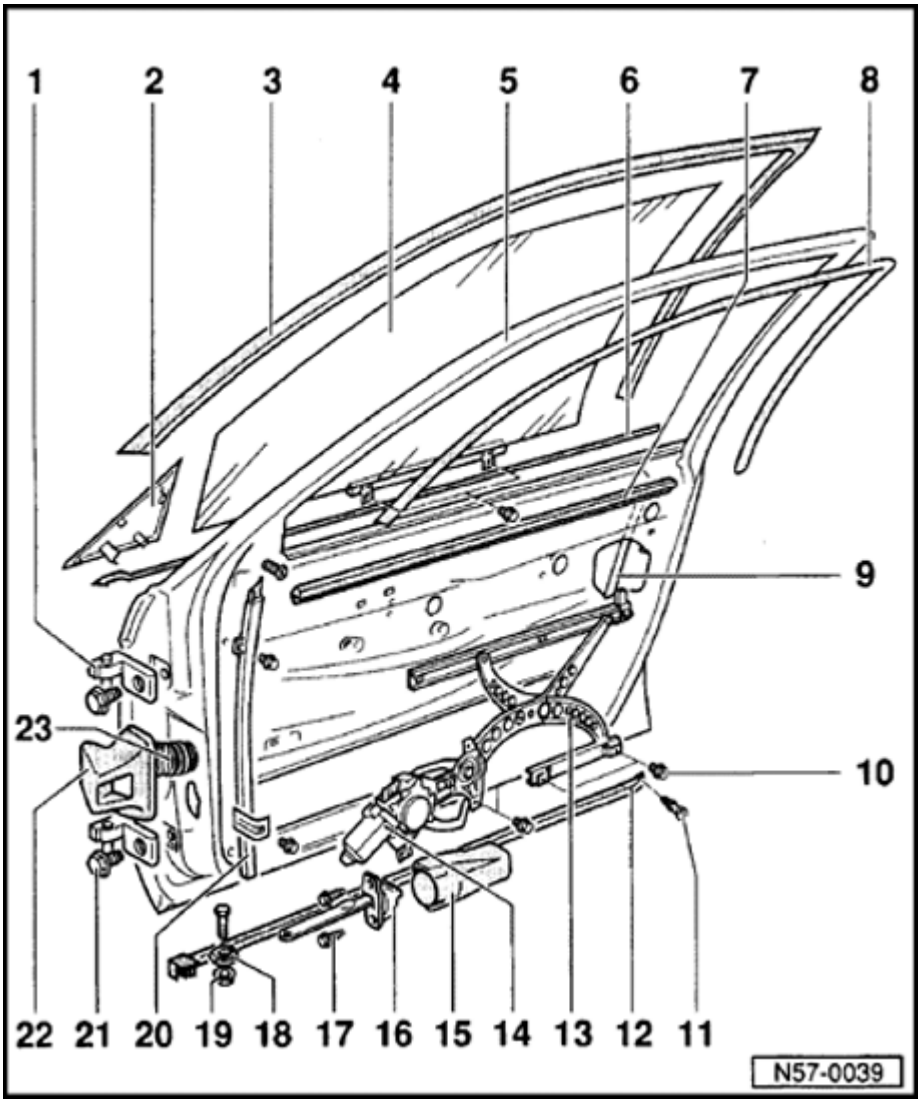

12 - Seal

- Outer securing clip additionally bonded.

13 - Window regulator

- Removing and Installing ⇒ Page 57-10
- Installing window glass to window regulator ⇒ Page 57-12
- Removing and installing (electrical) ⇒ Page 57-17

14 - Window regulator motor

- Removing and installing ⇒ Page 57-18

15 - Door check strap boot

16 - Door check strap

17 - Bolt

- 7 Nm (62 in. lb)

57-8

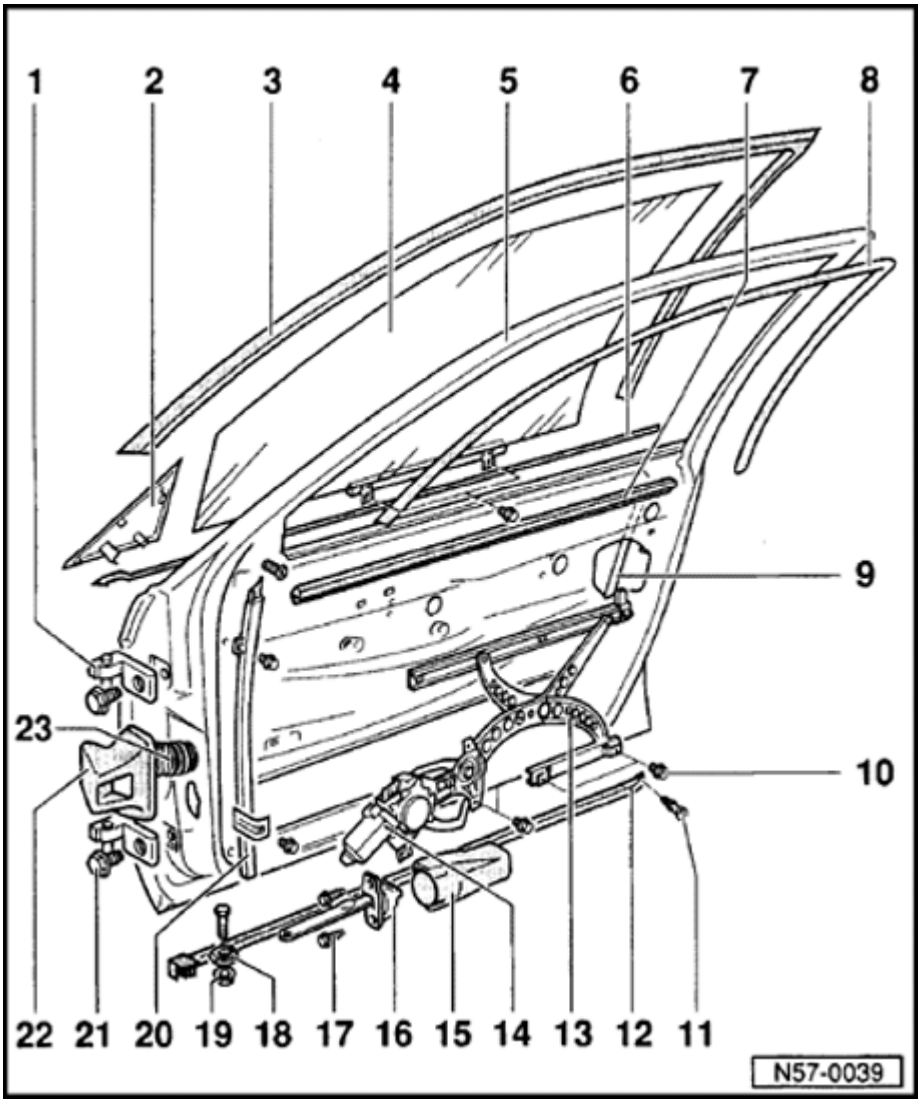

18 - Clip

19 - Lock nut

- 6.5 Nm (58 in. lb)

20 - Front window channel

- Remove downward and toward inside of door.

21 - Bolt

- 55 Nm (41 ft lb)

22 - Door check strap cover

- Self-adhesive, stuck to A-pillar.

23 - Multi-pin connector

- Separation point for all electrical and pneumatic connections.
- Unscrew coupling nut and pull off.

Door, removing and installing

For doors with central locking system and /or power windows:

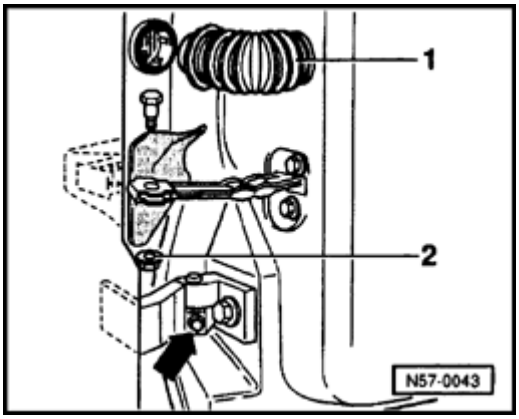

- Disconnect multi-pin connector -1- at A-pillar.
- Remove nut -2- and remove pin.
- Remove grub screw -arrow- from upper and lower hinges.
- Lift door up and out of hinge brackets.

Notes:

- *Clean screw with wire brush and nut thread with thread tap. Coat screw with locking fluid D 185 400 A 2.*
- *Tighten nut -2- to 6.5 Nm (57 in. lb).*

Power window regulators, removing and installing

- Unbolt window glass from window regulator.

- Push window glass up and secure in position (i.e. with adhesive tape).

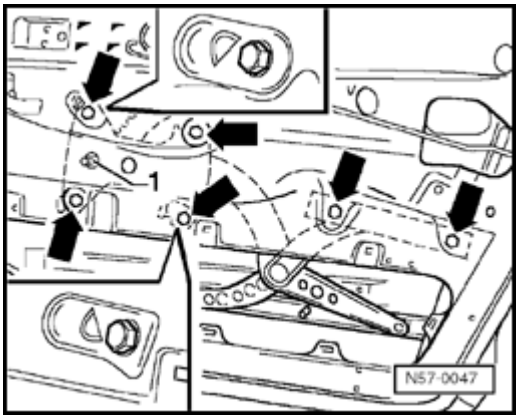

- Pull off sleeve -1- from window regulator axis.
- Remove window regulator.
- Raise window regulator until retaining lugs disengage and remove regulator downward.

Note:

Window glass installing to window regulator ⇒ *Page 57-12* .

Window glass, removing

- Pull inner window glass forward and lift out of flange.

- Lower window and unbolt window glass.

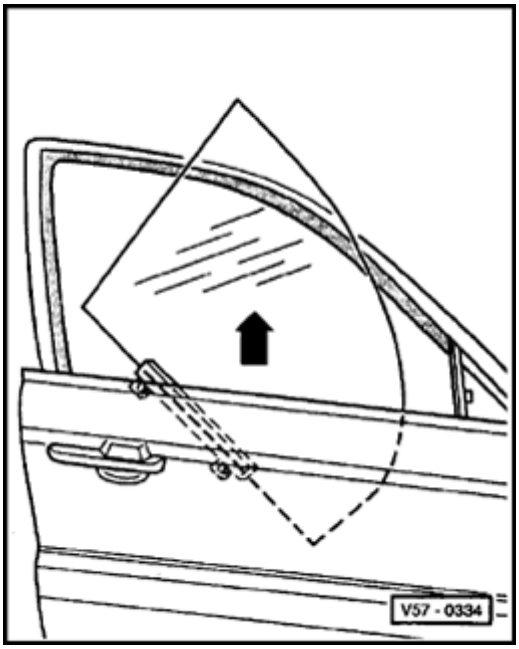

- Tilt window glass forward and lift out of window slot.

57-12

Window glass, installing on window regulator

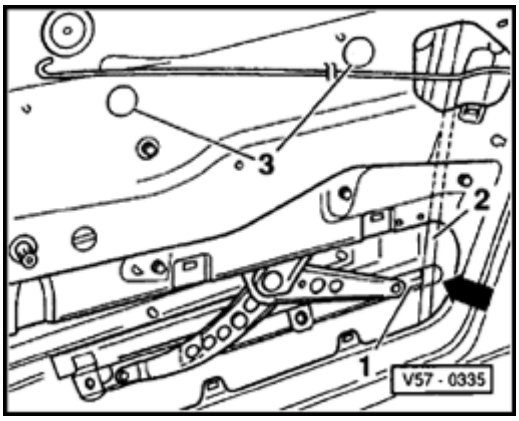

- Place window rail -1- onto channel -2- .
- Bolt window glass to window regulator but do not tighten.
- Raise window and then down again until bolts are visible through holes -3-.
- Tighten bolt to 7 Nm (62 in. lb).

57-13

Outer window channel, removing

- Remove inner and outer triangular trim plates.

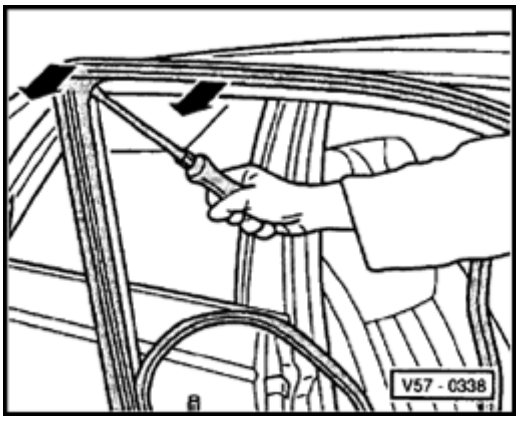

- Pull outer window slot seal off flange.
- Pull inner window channel off flange.
- Starting at the rear upper corner, press out outer window channel off flange.

57-14

Outer window channel, installing

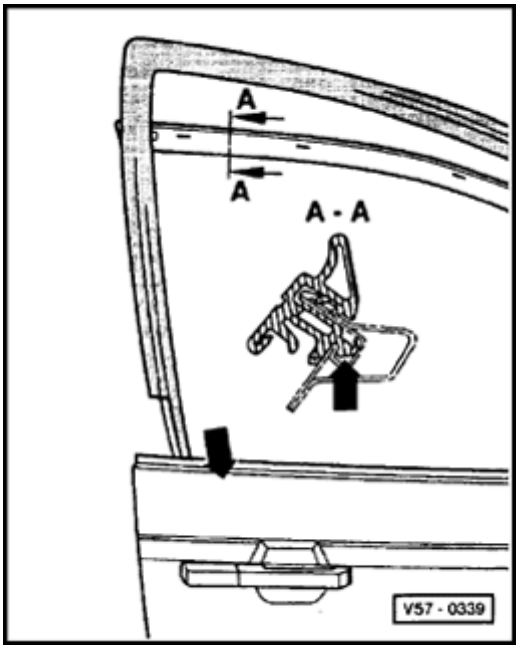

- Install channel into rear of window slot.
- Press window channel down and starting at upper corner, press onto flange. Retaining lip -arrow- must engage fully.

Lift channel, installing on door window glass

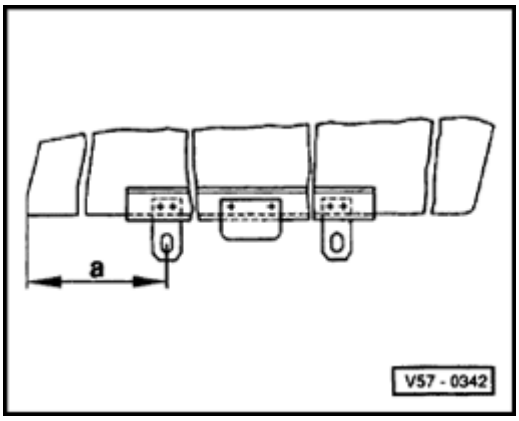

- Press lift channel onto window glass, a = 303 mm.

Door inner seal, removing

- Remove inner trim ⇒ Page 70-34 .

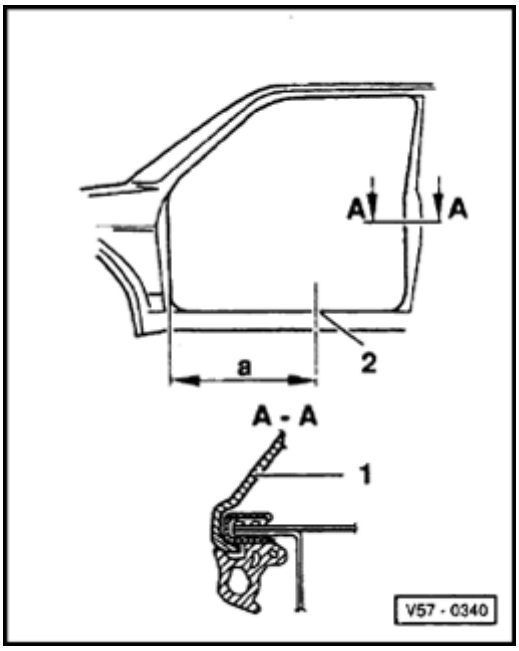

Inner trim -1- holds inner door seal.

- Joint position -2- below sill panel trim, dimension a = 520 ± 20 mm.

Power window regulators, removing and installing

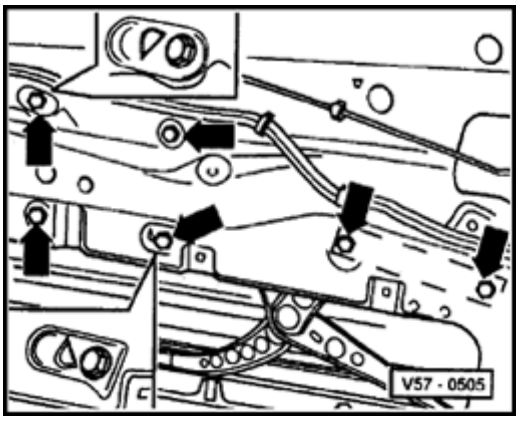

- Remove window glass from window regulator.
- Push window glass up and fasten in position with adhesive tape.
- Remove connector from power window motor.
- Unbolt window regulator.
- Lift window regulator and disengage retaining lugs. Remove window regulator downward and out.

Power window regulators, repairing

- Power window regulator, removing ⇒ Page 57-17 .

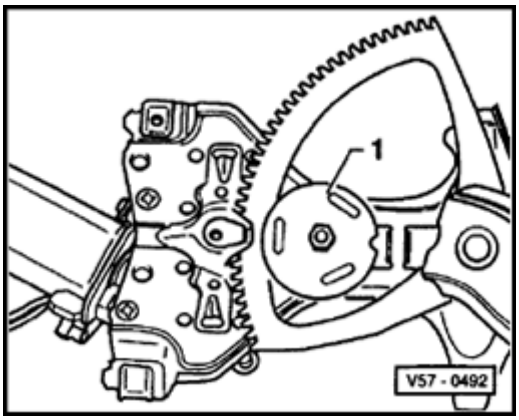

- Remove eccentric disc -1- by removing bolt from reverse side.

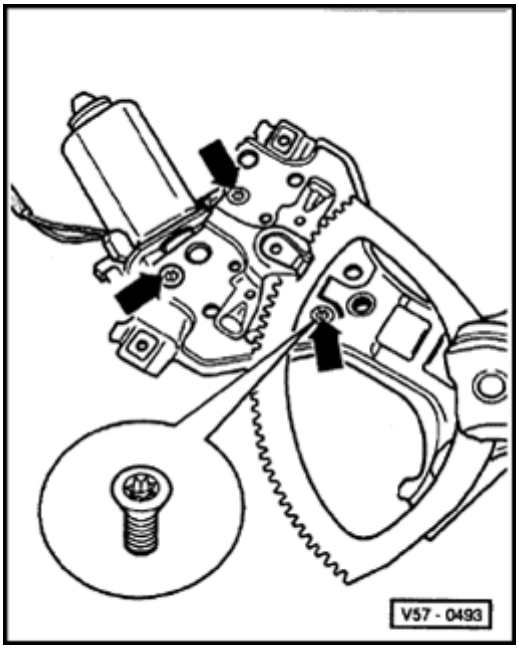

- Remove (Torx) screws for motor -arrows- and remove motor.

Notes:

- *Check function of regulator before installing it.*
- *Replacement of mechanical parts (linkage/cable) is done in the same manner.*

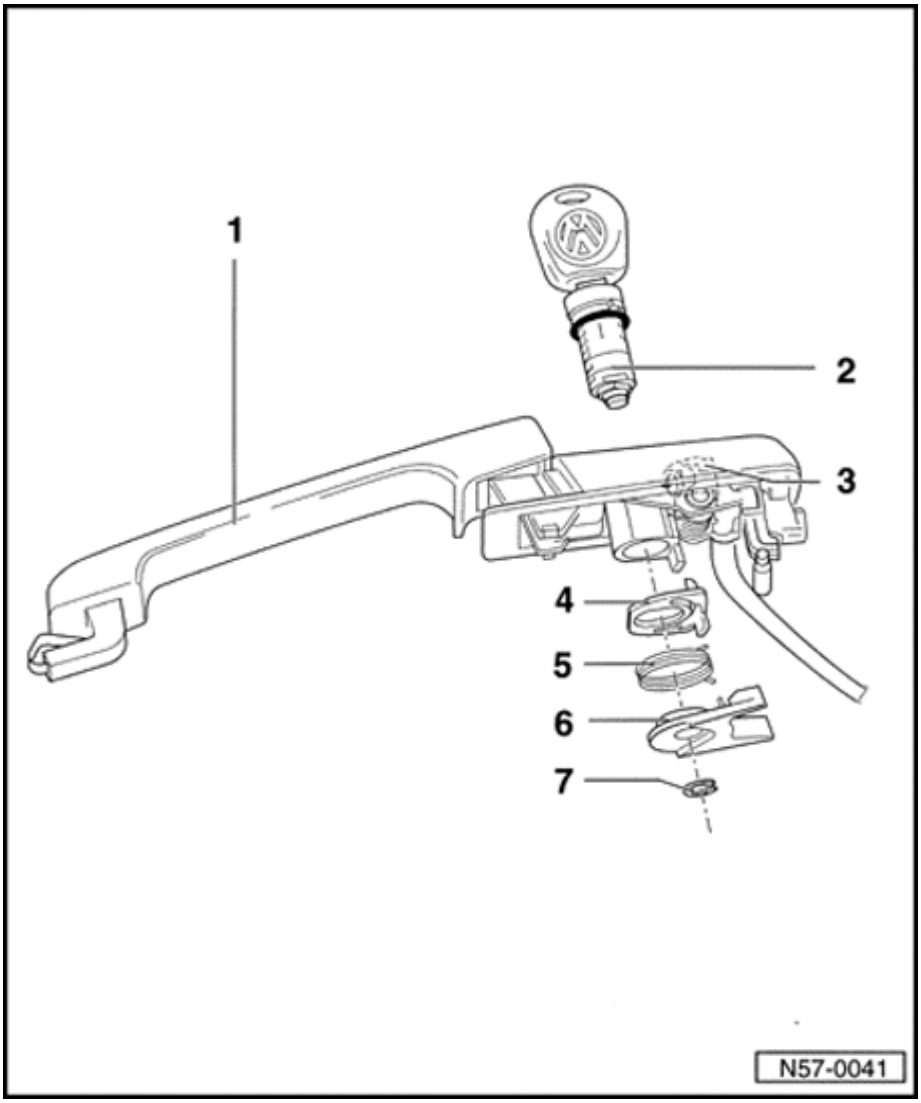

Door handle assembly (central locking system)

1 - Door handle with wiring for central locking

- Removing and installing ⇒ Page 57-21
- Remove wiring from clip.

2 - Lock cylinder

- With seal
- Removing:
  - Insert key into lock cylinder.
  - Remove lock ring - 7 -with small screwdriver.
  - Remove eccentric - 6 -, spring - 5 - and idler - 4 -.
  - Turn lock cylinder with inserted key 180° and pull out of door handle.
- Before installing, lubricate lock cylinder with G 000 400.
- Maintain common key locking ⇒ Page 57-23

57-20

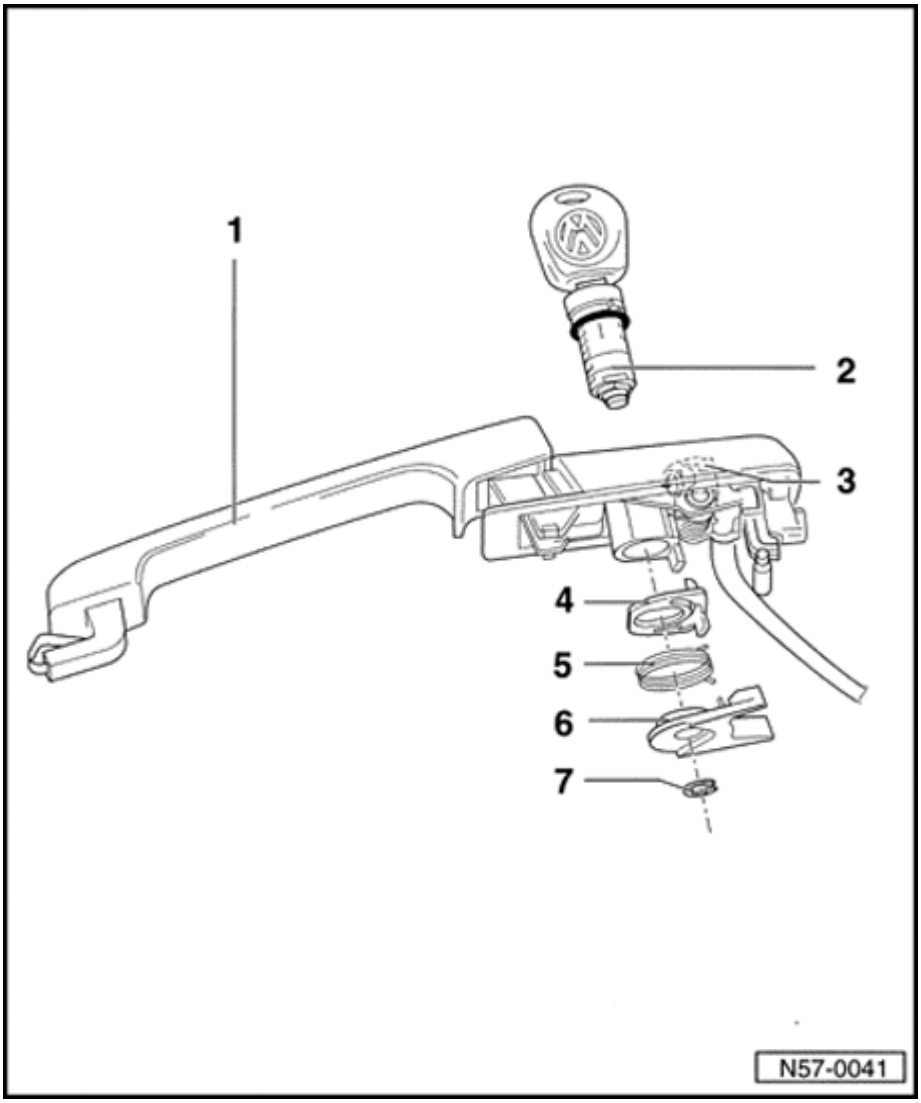

3 - Microswitch

- Cannot be removed.

4 - Idler

5 - Spring

6 - Eccentric

- Insert with pre-assembled spring.

7 - Circlip

Door handle, removing and installing

Remove door trim panel, carefully pull off moisture barrier and disconnect harness connector.

Note:

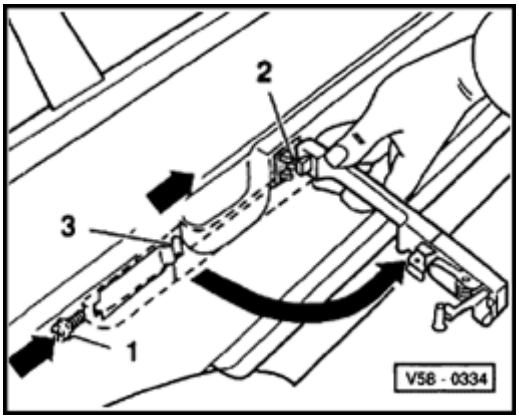

Right screw -1- has left-hand thread and flat black finish.

- Remove screw -1- (7 Nm (62 in. lb).
- Push door handle in direction of arrow and pivot out of door.

Notes:

- *Check padding -2- and clip -3- for damage, replace if necessary.*
- *Observe routing of wiring in door interior and secure with clips.*

Inner release handle, removing

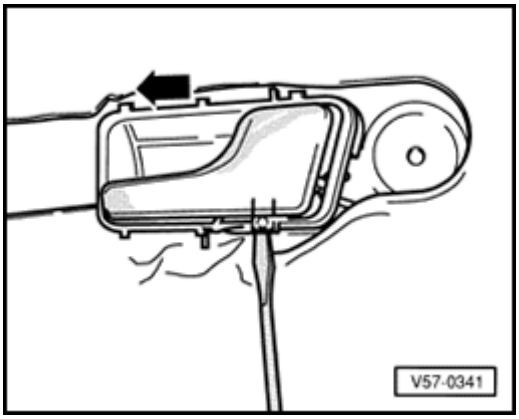

- Press clip out of hole in door inner panel.
- Press handle in forward direction out of mounting holes.

Common key locking, maintaining

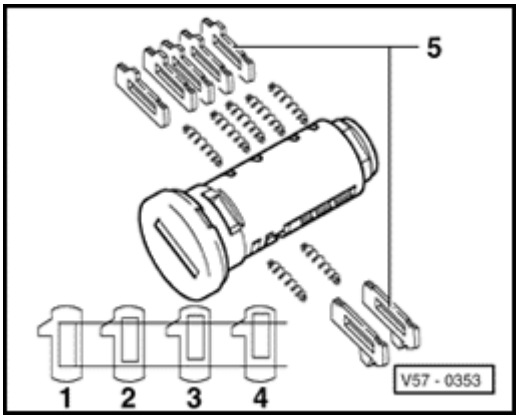

Common key locking can be maintained in the vehicle by repositioning or inserting tumblers -5-.

1; 2; 3; 4 - possible tumbler sizes

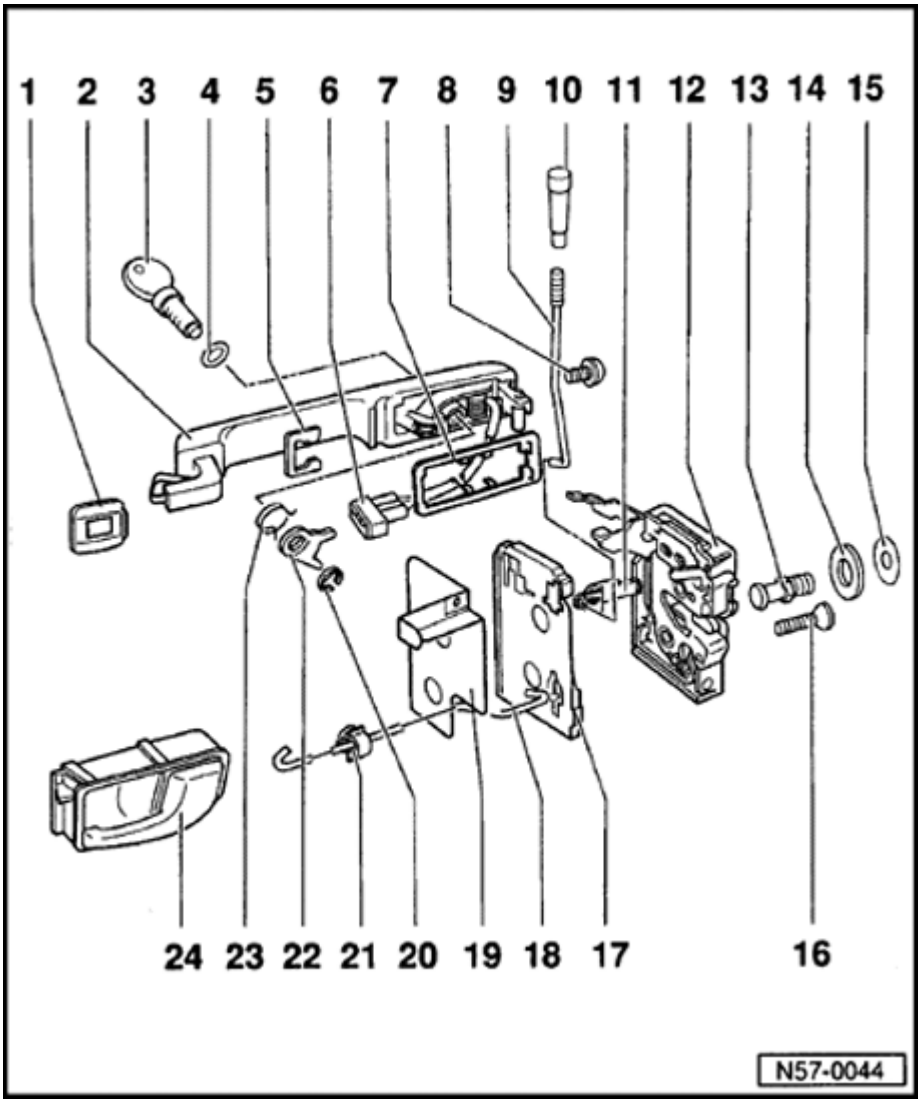

Door lock assembly

1 - Backing

2 - Door handle

- Removing and installing ⇒ Page 57-21
- On right side with left-hand thread (screw has flat black finish.
- On vehicles with central locking remove front door interior trim first and disconnect harness connection.
- Servicing with central locking ⇒ Page 57-19

3 - Lock cylinder

- Removing and installing ⇒ Page 57-19

57-25

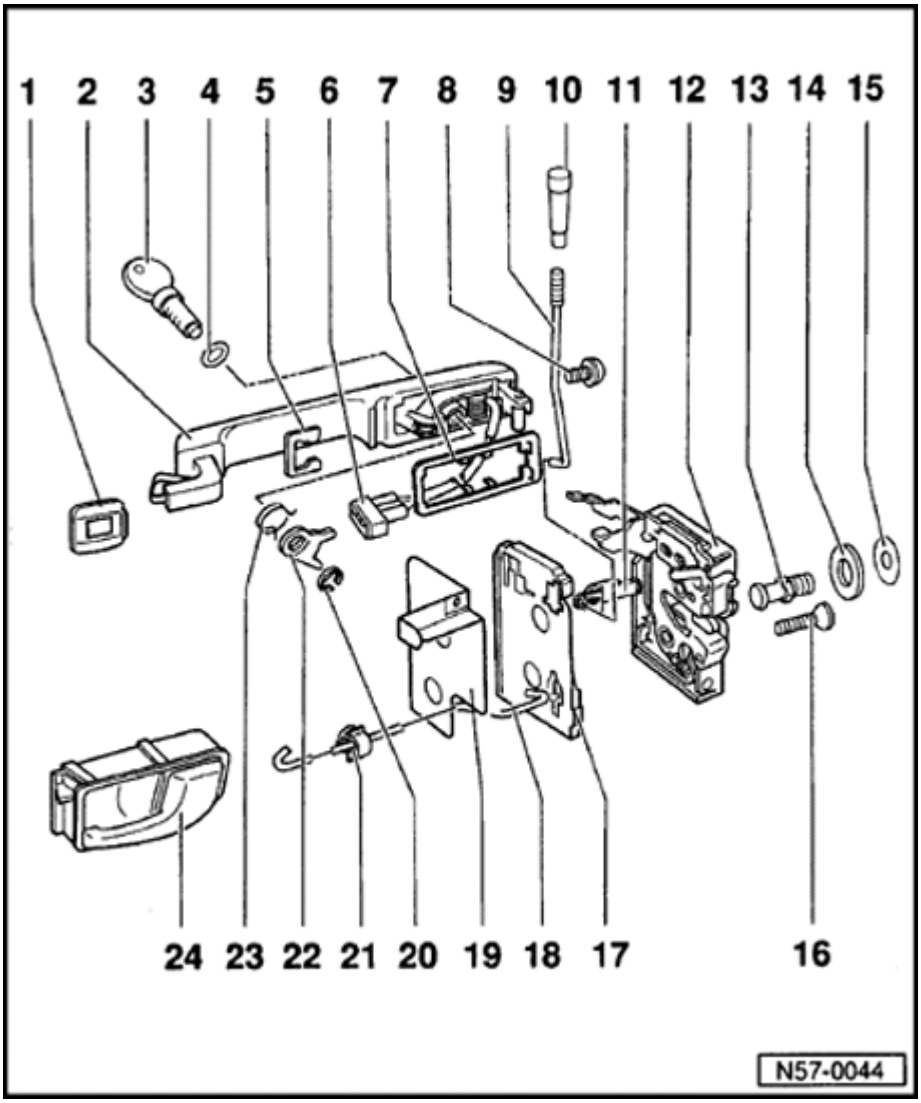

4 - Sealing ring

5 - Clip

6 - Connector

- for central locking.

7 - Backing

8 - Screw

- On the right side with left-hand thread (screw has flat black finish).
- 7 Nm (62 in. lb)

9 - Locking rod

10 - Locking knob

- Screwed on

11 - Connecting lever

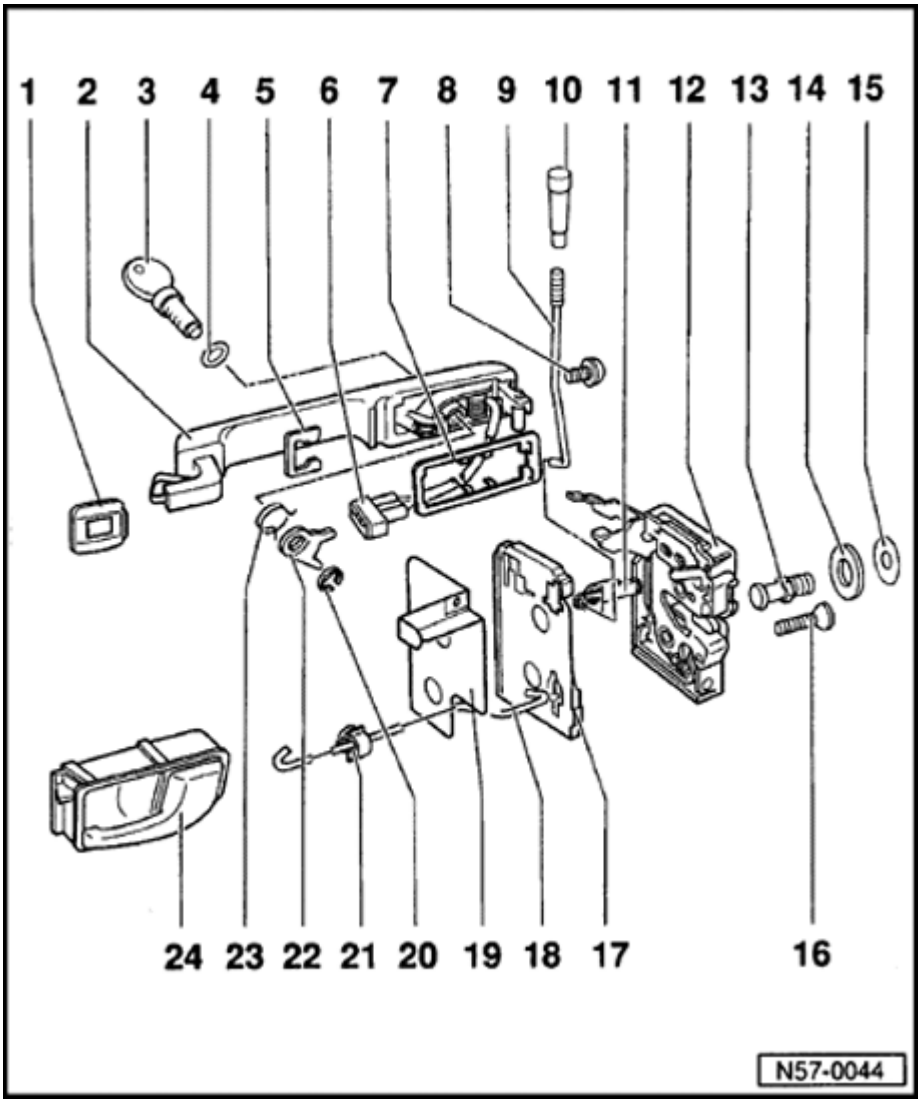

12 - Door lock with free-play adjustment

- Removing and installing ⇒ Page 57-28
- The door must be closed for removing and installing.

13 - Striker pin

- 50 Nm (37 ft lb)

14 - Dished spring washer

- Outer edge must face toward outside.

15 - Plastic washer

16 - Screw

- 20 Nm (15 ft lb)

17 - Seal

- Must be installed with matching door lock.

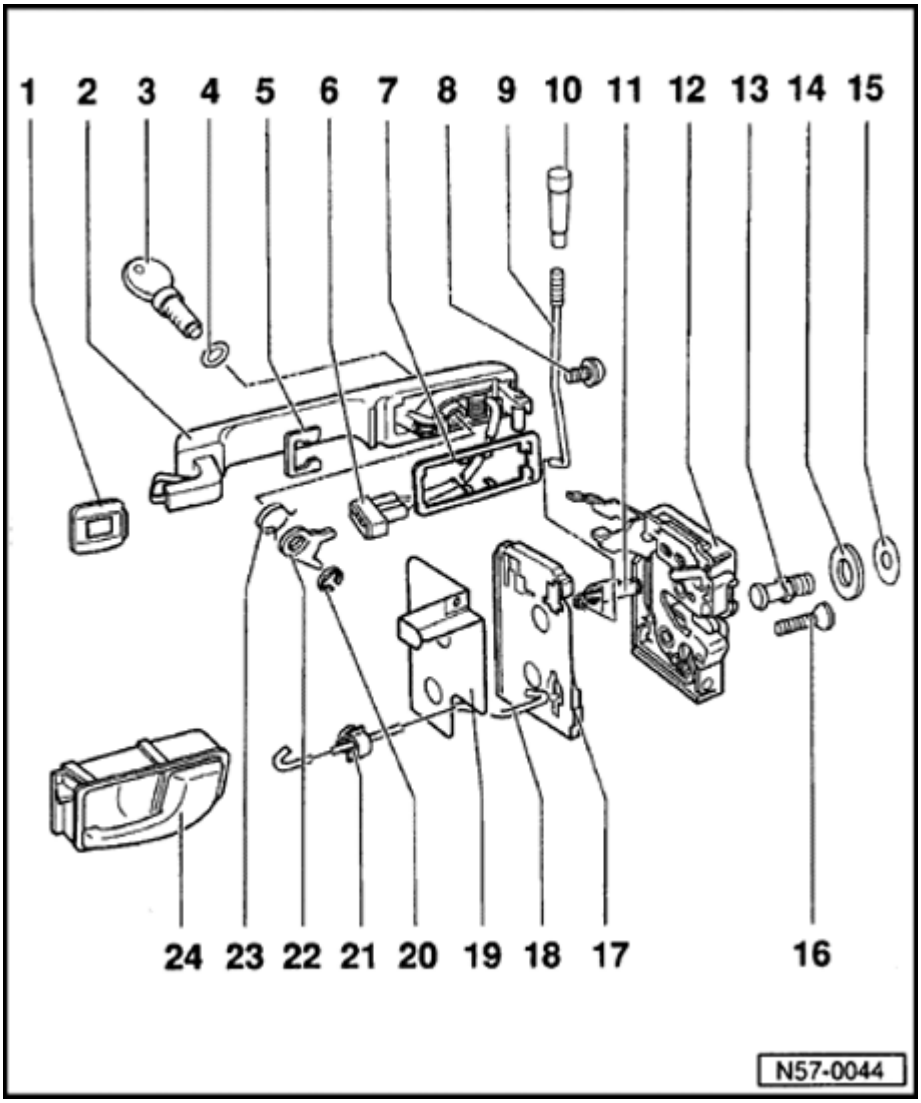

18 - Pull rod

- Hook into interior release mechanism from bottom to top.

19 - Anti-theft protection

20 - Circlip

21 - Clip

22 - Eccentric

23 - Spring

24 - Inner door release handle

- Removing ⇒ Page 57-22

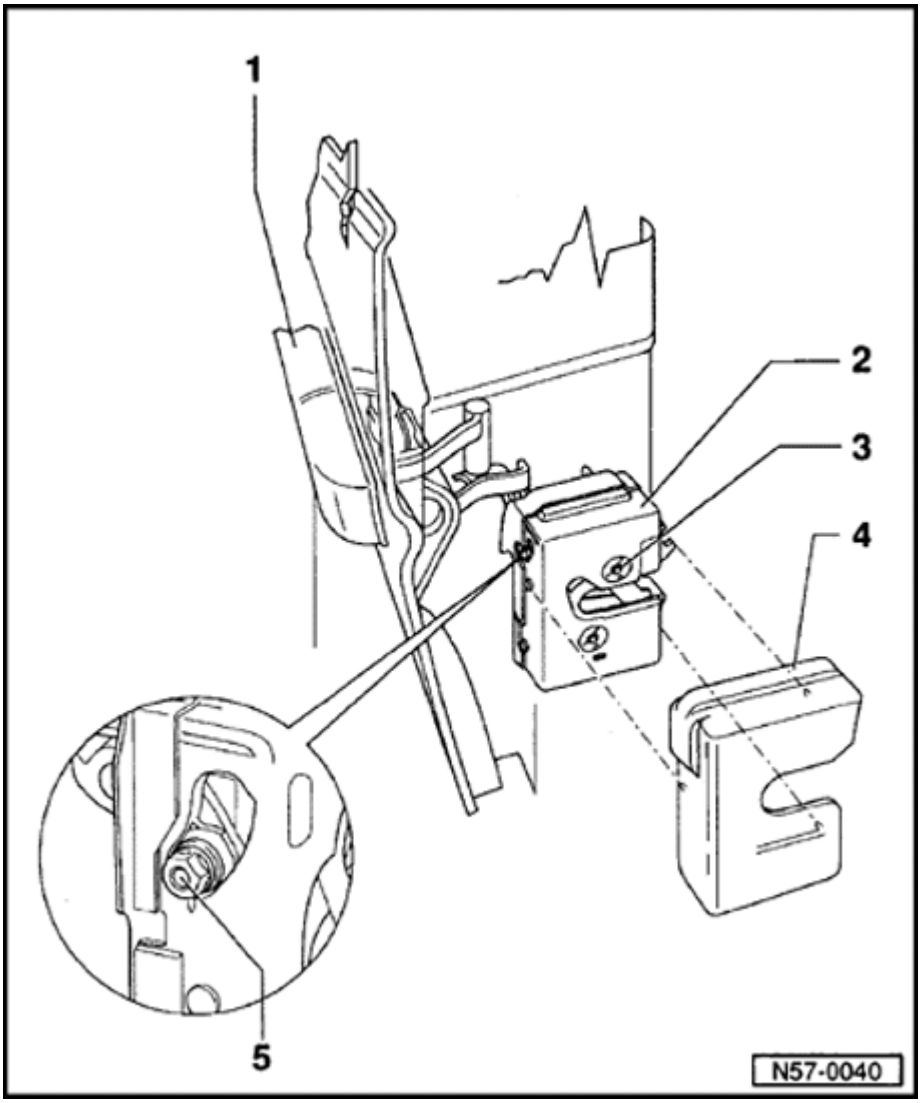

Door lock assembly (with free-play adjustment), removing and installing

1 - Door handle

- Removing and installing ⇒ Page 57-21

2 - Door lock with free-play adjustment

- Removing and installing ⇒ Page 57-29

3 - Screw

- 20 Nm (15 ft lb)

4 - Cover

5 - Nut

- Free-play adjustment

Removing

- Door window must be closed.

- Unclip cover.

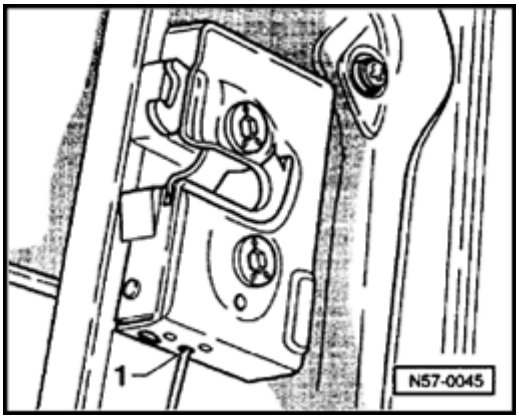

- For removal and installation, operating lever must be locked with 3 mm diameter drift through hole (open door from inside)

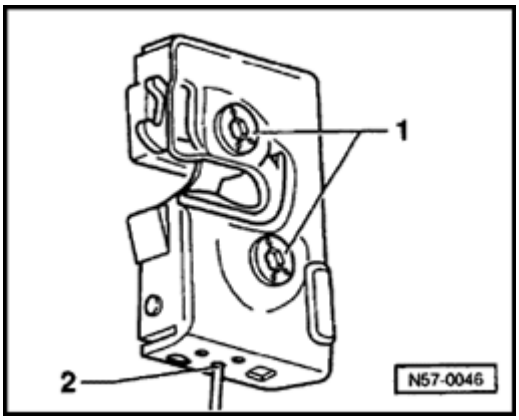

- Remove screws -1-.
- Pull away door lock slightly and lock operating lever with 3mm diameter drift through hole -2-.
- Pull out door lock and unlock pull rod from interior door release handle.

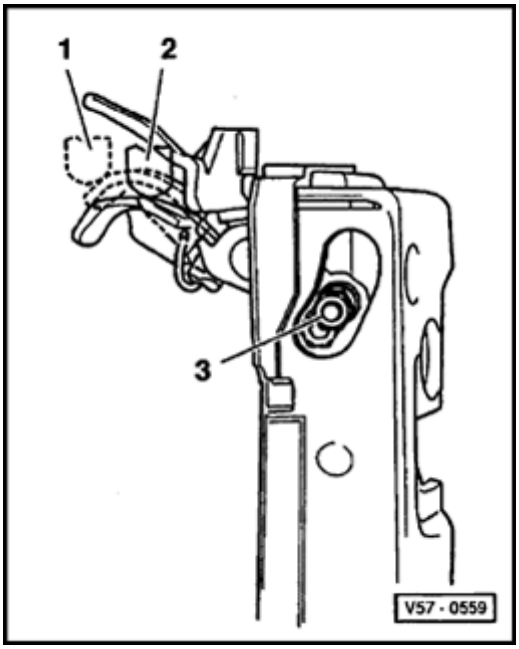

Installing

- Loosen nut -3- with 5.5 mm wrench. Release lever releases tension.

  1 - Assembly position

- Install door lock. Free-play adjustment is accomplished between release lever and relay lever.

  2 - Installation position

- Tighten nut -3- , 2.4 Nm (left side: right-hand thread, right hand side: left-hand thread).
- Make adjustment every time door handle or door lock is installed. Check for proper functioning after installation.
- Install cover.

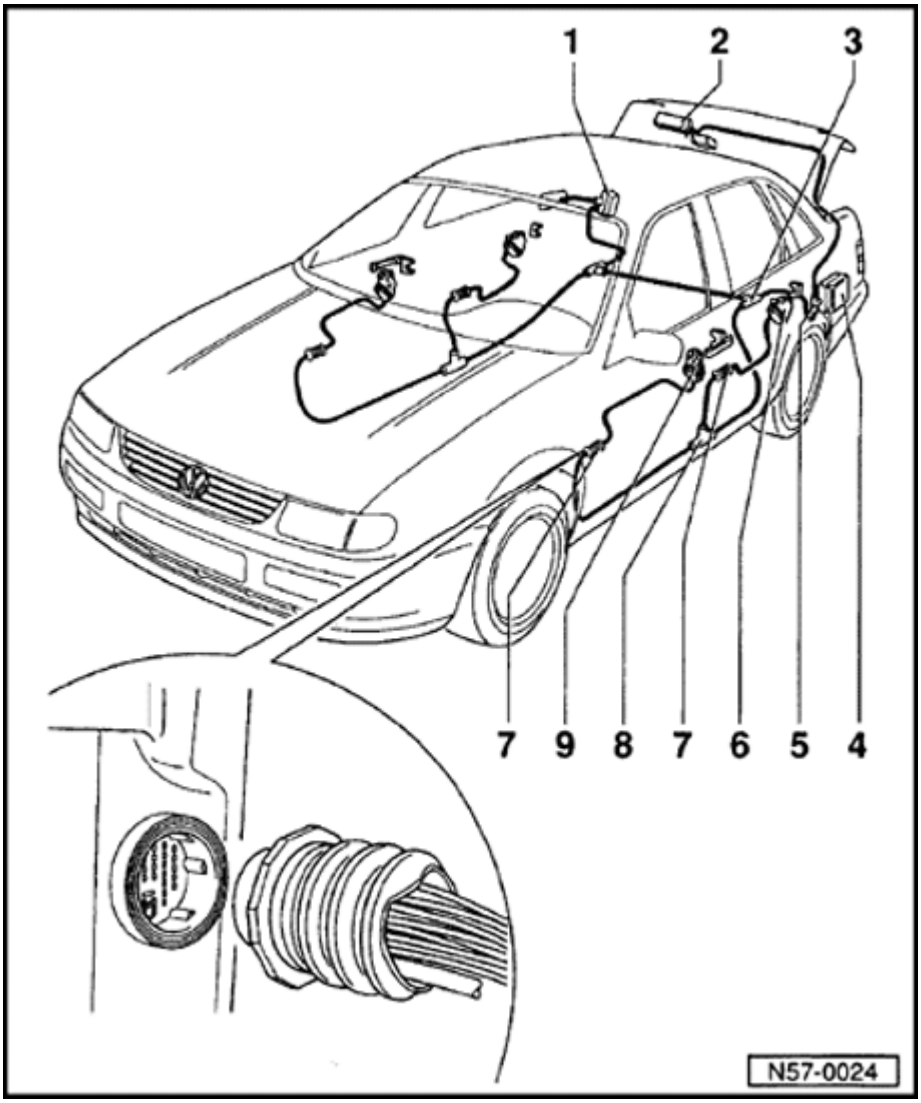

Central locking, repairing (Sedan)

1 - Fuel tank flap activator

- Before removing, remove rear compartment trim up to wheel house.
- Removing and installing ⇒ Page 57-37

2 - Rear lid activator

- Remove screws for activator and and unclip connecting rod.

3 - T-connector

- Location: wheel house / backrest covered by rear compartment carpeting.

4 - Bi-pressure pump

- Remove rear compartment trim before removing.
- Installing ⇒ Page 57-36

57-32

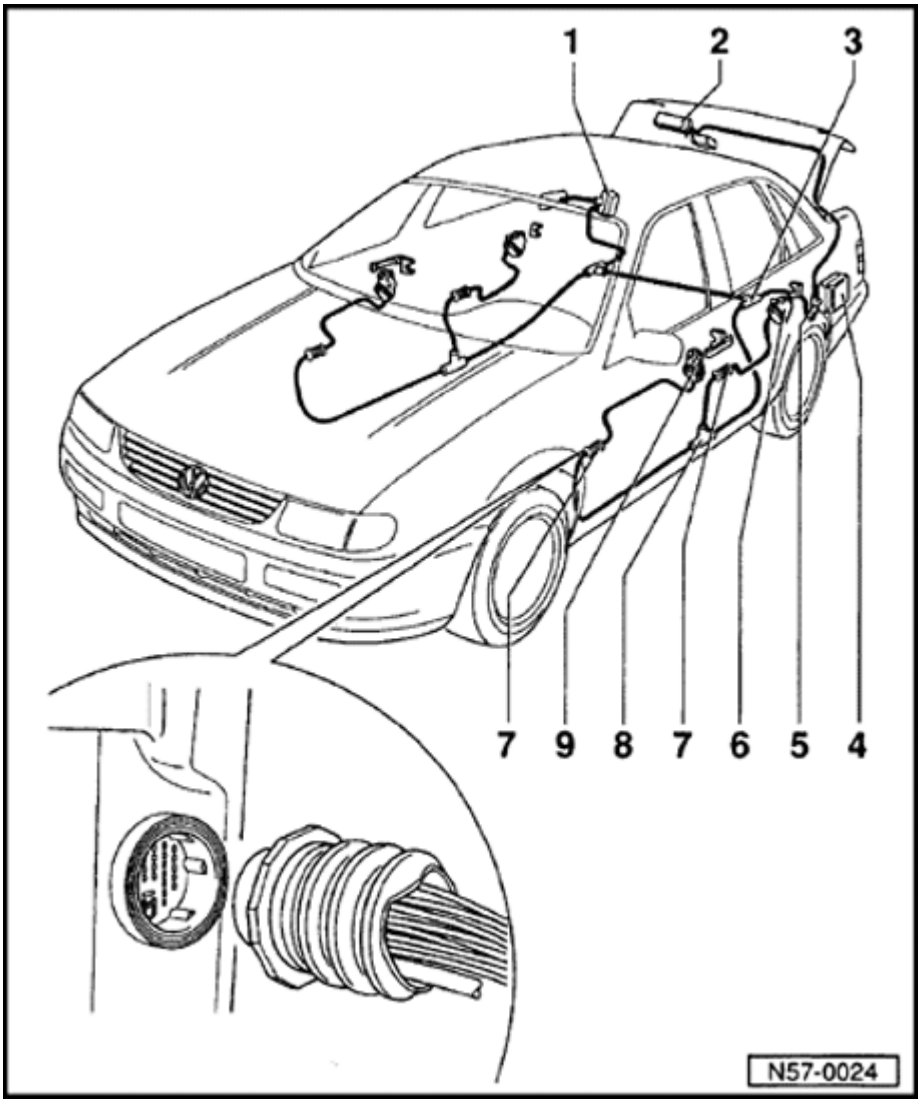

5 - T-connector

- Location: Bi-pressure pump

6 - Door activator, rear

- Removing ⇒ Page 57-40
- Installing ⇒ Page 57-40

7 - Hose connector

- Location: in connector between door and B-pillar.

8 - T-connectors

- Location: B-pillar sill panel covered by sill molding.

9 - Door activator, front

- Removing ⇒ Page 57-38
- Installing ⇒ Page 57-38

57-33

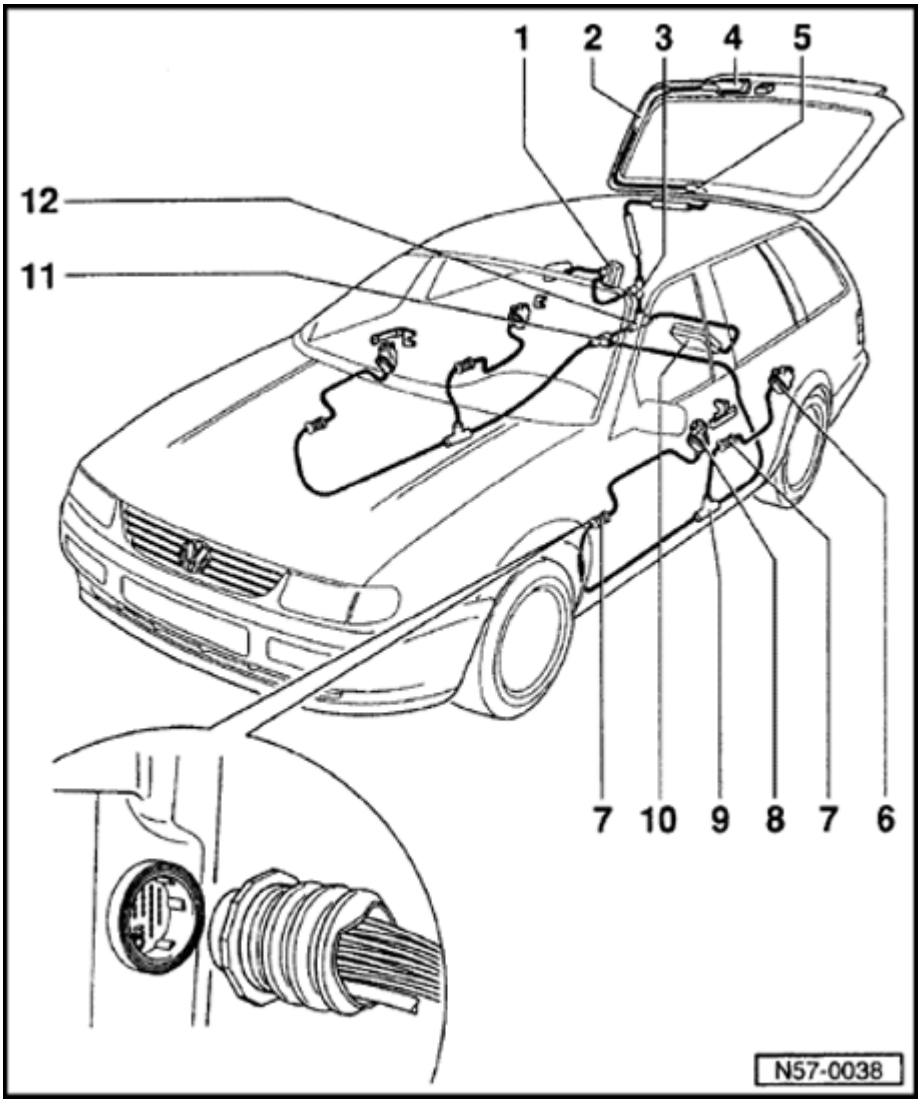

Central locking, repairing (Wagon)

1 - Fuel tank flap activator

- To remove, remove right rear compartment trim and loosen right front trim ⇒ Page 70-53
- Removing and installing ⇒ Page 57-37

2 - Foam tube

3 - T-connector

- Location: Fuel tank flap activator.

4 - Rear lid activator

- To remove, first remove rear lid trim ⇒ Page 70-59

57-34

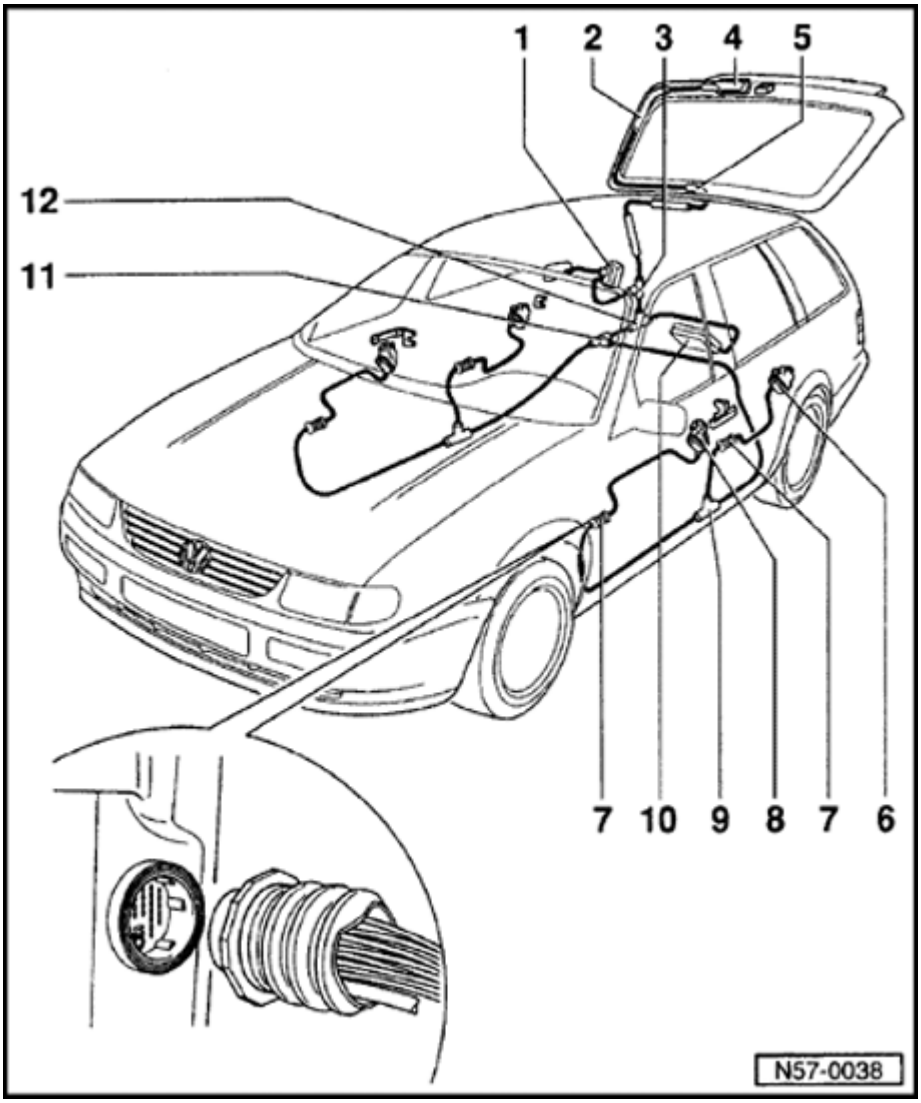

5 - Sleeve

6 - Door activator, rear

- Removing ⇒ Page 57-40
- Installing ⇒ Page 57-40

7 - Hose connector

- Location: in connector between door and pillar.

8 - Front door activator

- Removing ⇒ Page 57-38
- Installing ⇒ Page 57-38

9 - T-connectors

- Location: B-pillar sill panel covered by sill molding.

10 - Bi-pressure pump

- Location: Recess in right rear vehicle floor.

57-35

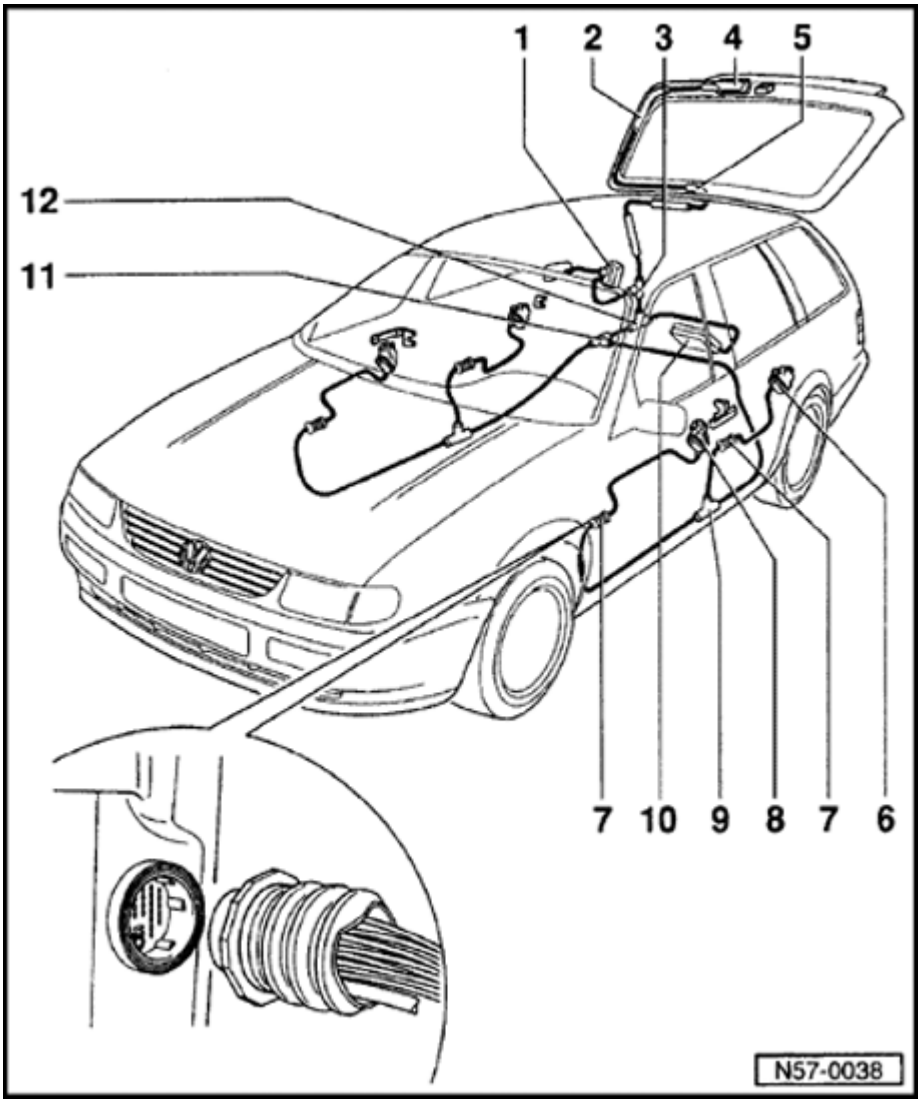

11 - T-connector

- Location: behind wheel house, right.

12 - T-connector

- Location: Wheel housing / backrest, covered by rear compartment trim.

57-36

Bi-pressure pump, installing (Sedan)

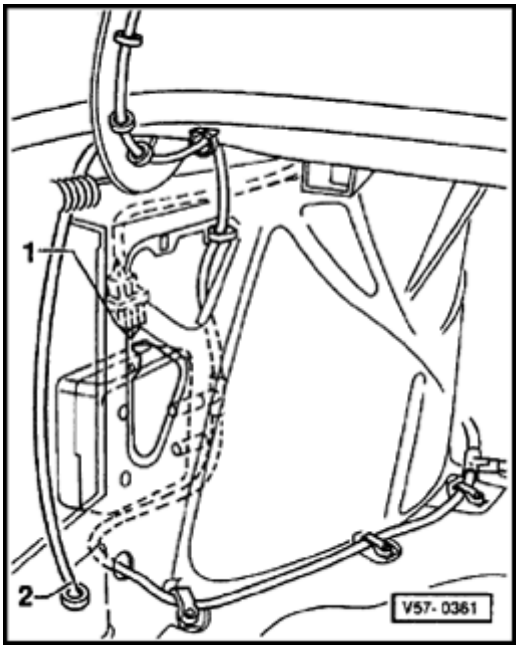

- Install pressure line.
- Connect multi-pin connector to bi-pressure pump. Check for proper seating.
- When inserting bi-pressure pump, connector -1- (4-pin) must engage in clips.
- When instaling bi-pressure pump be sure that water drain hose -2- for power roof is not pinched and is not pulled from grommet. After completed installation check routing of hose once more.

57-37

Fuel tank flap activator, removing and installing

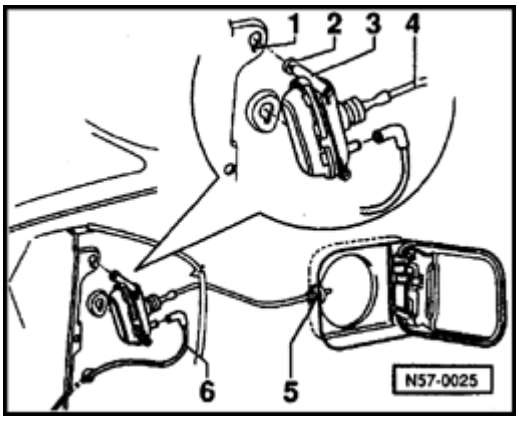

- Remove screws -2- , swing activator -3- upward out of bracket -1- .
- Disconnect pressure line -6- from activator.
- Pull activator with locking rod -4- from rod guide -5-.
- Perform function check before reinstalling luggage compartment carpeting.

57-38

Front door activator, removing and installing

Removing

Remove door trim, move moisture barrier out of way ⇒ Page 70-15 .

Remove door inner controls and pull rod ⇒ Page 57-22 .

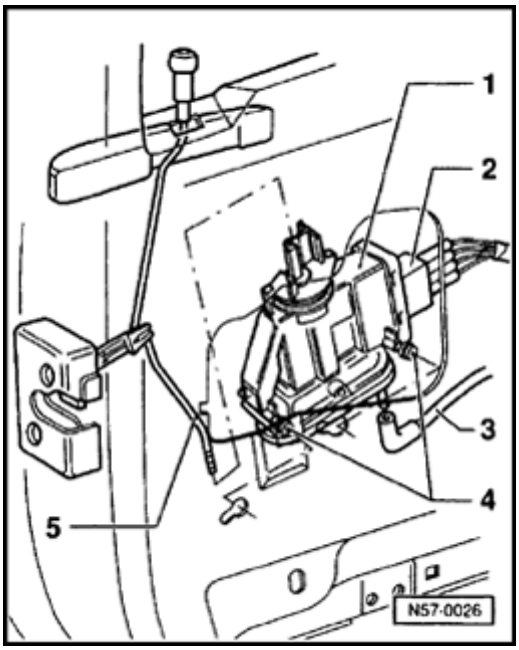

- Disconnect pressure line -3- from hose clips (4x) and disconnect from activator.
- Open hinge -1- of activator and press out connector rod -5-.
- Remove screws and remove activator upward.
- Disconnect multi-pin connector.

Installing

- Install pressure line and multi-pin connector, connector must click into position.
- Install activator with pre-inserted screws and tighten.
- Hook pressure line into clips.

57-39

- Install inside door handle and pull rod.

- Activator and door lock must be in locked position (down) to install connector rod.

Note:

For the driver s door, the door lock latch must be in the closed position (second or main lock position).

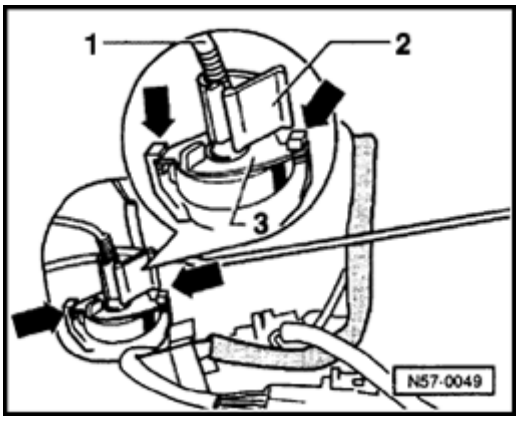

- Lock washer -3- must be locked into position - arrows-.
- Press in connector rod -1- without tension and close hinge -2-.

CAUTION!

Do not pull connector rod downward when pressing in.

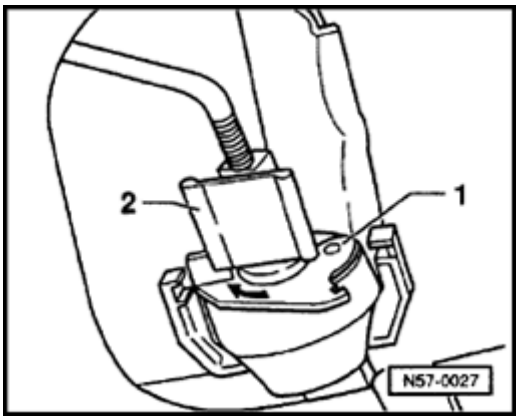

- When locking, hinge -2- must turn lock washer -1- and disengage.
- Perform function check.
- Install trim panel.

57-40

Rear door activator, removing and installing

Removing

Remove door trim, partially remove moisture barrier ⇒ Page 70-26 .

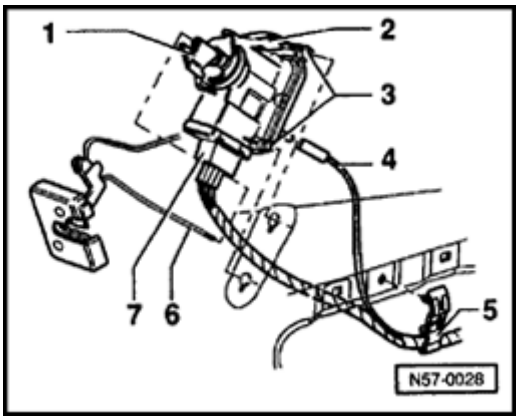

- Disconnect hoses from clips -5-.
- Disconnect connector rod -6-.
- Remove screws -3- and remove activator downward and out.
- Disconnect pressure hose -4- and multi-pin connector -7-.

Installing

- Connect pressure hose and multi-pin connector. Connector must engage in clip.
- Insert activator with pre-installed screws and tighten screws.

Note:

Activator and door lock must be in locked position to install connector rod.

57-41

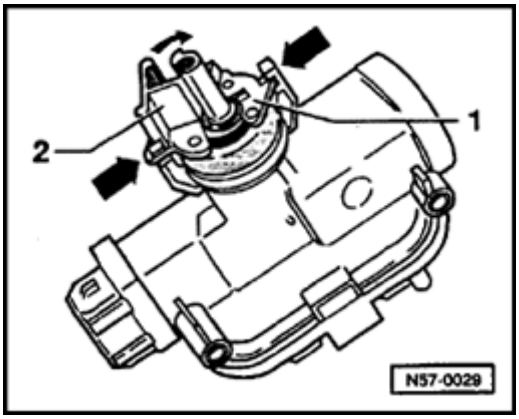

- Striker plate -1- must be engaged -arrows-.
- Connect hoses into clips.
- Press in connecting rod tension-free and close hinge -2-.

CAUTION!

Do not pull connecting rod down when pressing into position.

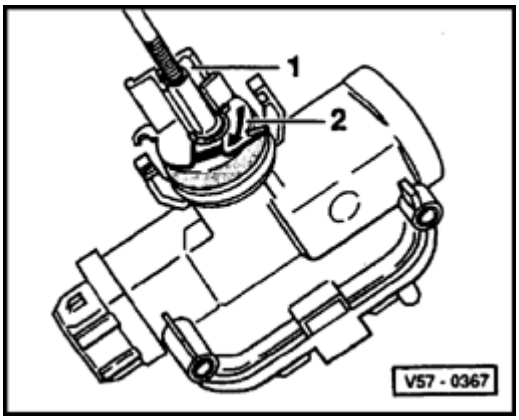

- When closing, hinge -1- must turn striker plate -2- and cause it to engage.
- Perform function test.
- Install trim panel.

57-42

Central locking system, functional check

Notes:

- *If the system is working properly, all locks must be locked in about 2 seconds. If the bi-pressure pump runs longer than 5 seconds, the system is leaking.*

- *With the linkages are not correctly adjusted, the switch-off point is not reached in the activator and the bi-pressure pump pulsates . After a maximum of 35 seconds the control module must switch off the bi-pressure pump.*

Test requirements

- Doors, rear lid and fuel tank flap are closed.

- Door windows completely open.

Locking system, checking

- Push down lock knob on driver s door.

  - Locking knobs on all doors must go down; all doors, the rear lid and the fuel filler flap are locked.

- Check locking on all doors, rear lid and fuel filler flap.

Note:

Central locking and unlocking must be possible only using the locking knob at the driver s door.

57-43

Anti-theft function, checking

Requirements:

- Doors, rear lid and fuel tank flap are closed.
- Door windows completely open.

Anti-theft function, checking

- Lock driver s door with key and within 12 seconds pull up all locking knobs.
  - 12 seconds after unlocking, the central locking system pump and control module -V69- must run and all doors must be locked again.
- After another 15 seconds, pull up all door locking knobs one after the other (wait at least 24 seconds after locking with key)
  - It must not be possible to pull the locking knobs into the unlocked position (up to 8 mm is OK). At the same time the pump must start up to pull the locking knobs back.

57-44

- At the time one of the locking knobs is pulled, an audible locking sound must be heard (safety solenoids are blocking the locking rods).

- The doors are locked and secure, the rear lid and the fuel filler flap are locked.

- Repeat test starting with passenger s door.

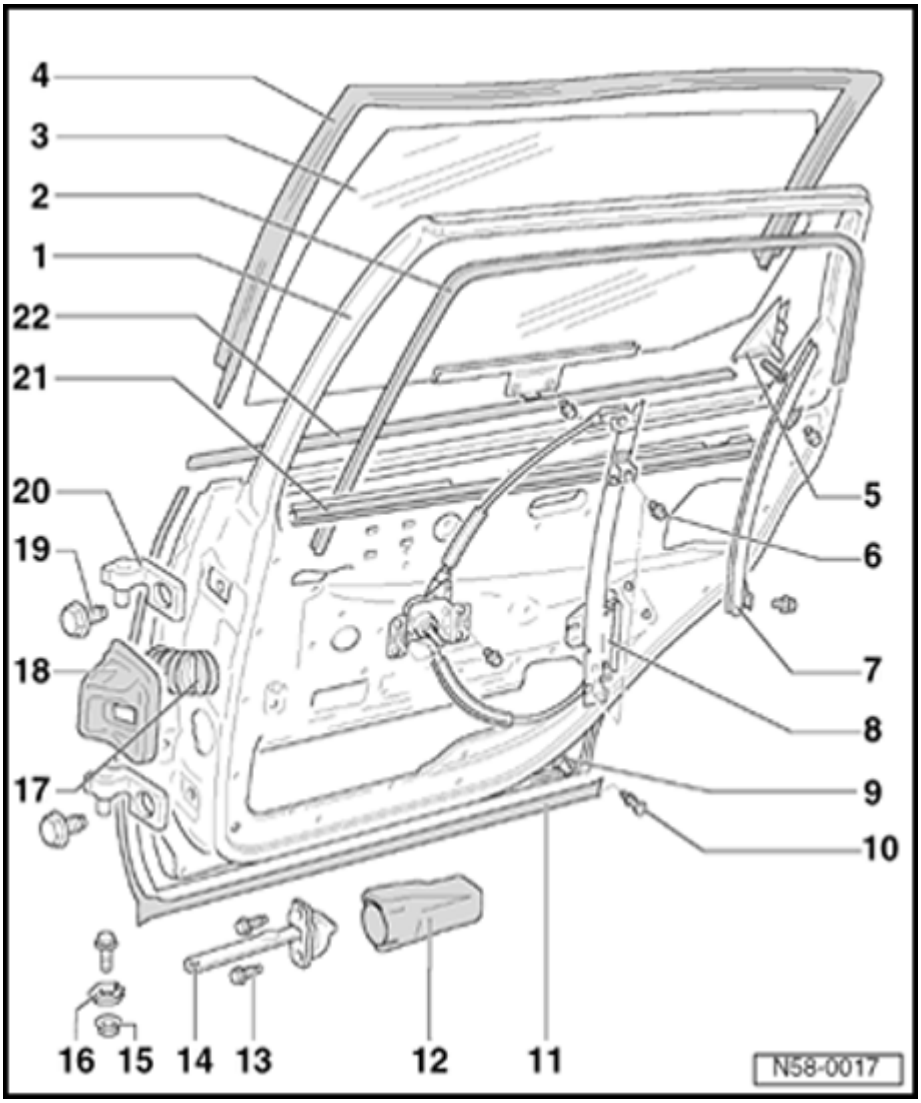

Rear door assembly

Door, repairing

1 - Door

- Removing and installing ⇒ Page 58-5
- Adjusting: at hinge within oversized holes.

2 - Inner window channel

- Pushed onto flange.

3 - Door window glass

- Removing and installing ⇒ Page 58-7
- Lift rail at window glass, dimension ⇒ Page 58-11

4 - Outer window channel

- Buttoned into window frame.
- Cannot be removed without destroying it.
- Removing ⇒ Page 58-9
- Installing ⇒ Page 58-10

58-2

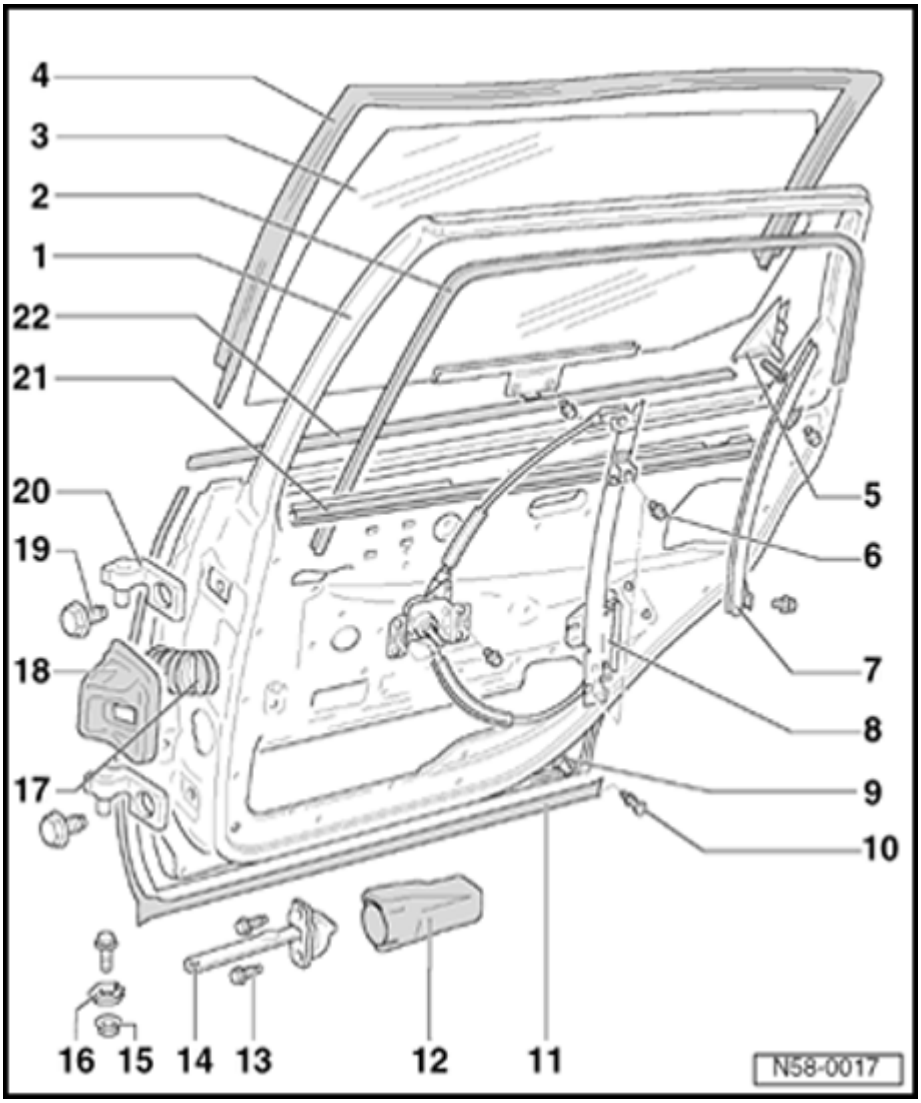

5 - Cover

6 - Bolt

- 7 Nm (62 in. lb)

7 - Window channel

- Pull up and out of window slot.

8 - Window regulator

- Removing and installing ⇒ Page 58-6
- Installing glass to window regulator ⇒ Page 58-8

9 - Catch pin

10 - Clip

- two-piece

11 - Seal

- Outer securing clip additionally bonded (front edge of door).

58-3

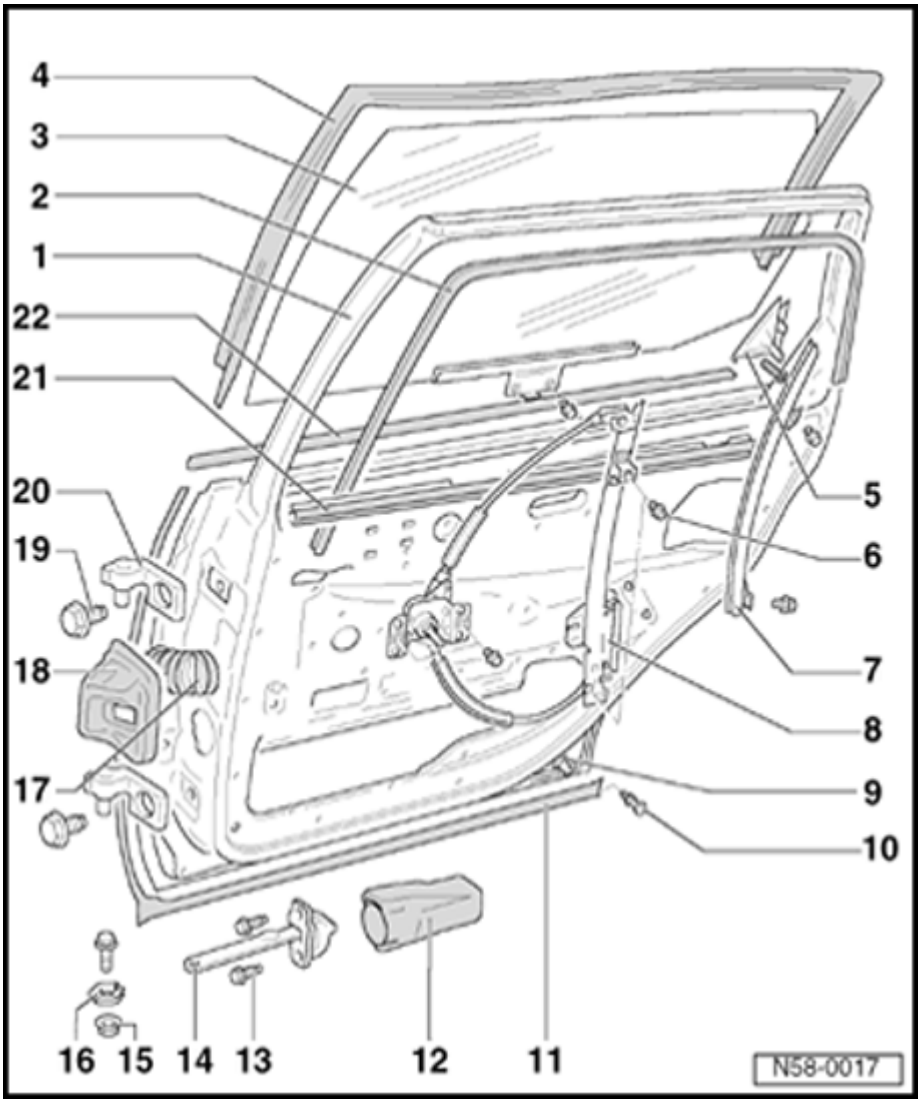

12 - Door lock strap boot

13 - Bolt

- 7 Nm (62 in. lb)

14 - Door check strap

15 - Nut

- 6.5 Nm (58 in. lb)

16 - Clip

17 - Multi-pin connector

- Separation point for all electrical and pneumatic connections.
- Remove coupling nut and pull off.

18 - Door check strap cover

- Self-adhesive, is stuck to B-pillar.

58-4

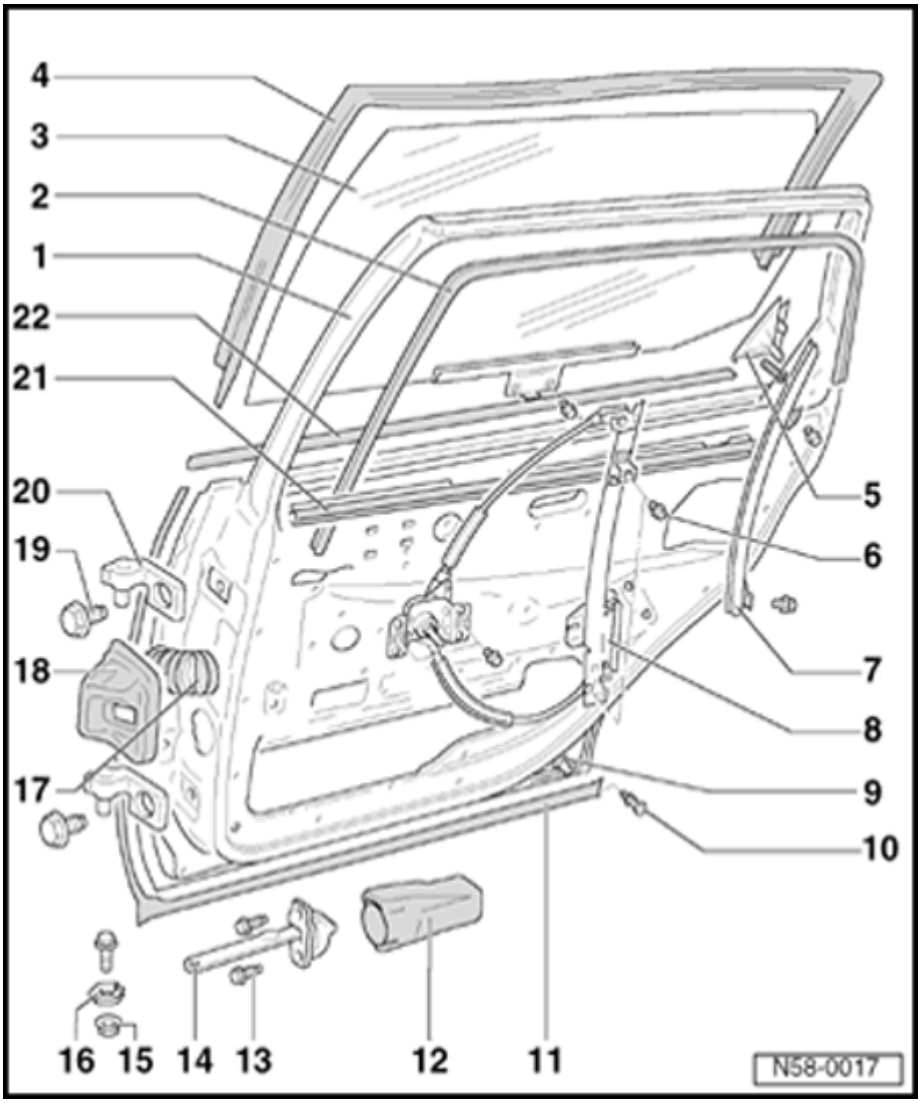

19 - Bolt

- 55 Nm (41 ft lb)

20 - Door hinge

- Bolted to door, inserted toward B-pillar and secured with grub screw.

21 - Inner window slot seal

- Pushed onto flange.

22 - Outer window slot seal

- Pushed onto flange.

58-5

Door, removing and installing

With central locking and /or power windows.

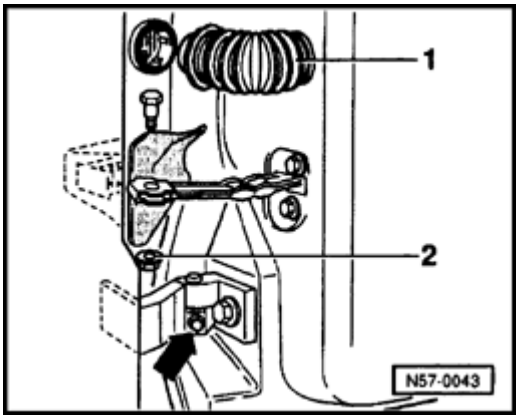

- Disconnect multi-pin connector -1- on B-pillar.
- Remove nut -2- and remove pin.
- Remove grub screw -arrow- from upper and lower hinge.
- Lift door up and out of hinge brackets.

Notes:

- *Clean bolt thread with wire brush and nut thread with thread chaser. Coat bolt thread with locking fluid D 185 400 A 2.*
- *Tighten nut -2- with 6.5 Nm (58 in.lb).*

Window regulator, removing and installing

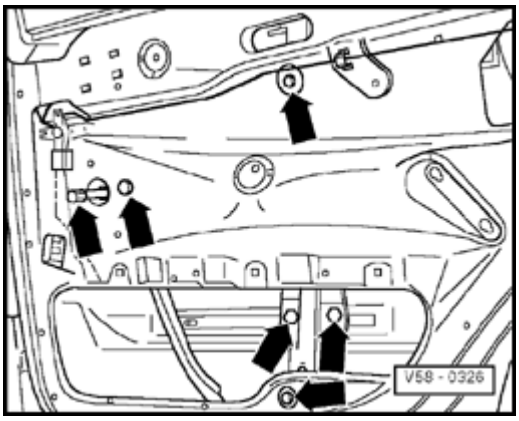

- Unbolt window glass from window regulator.
- Push door window up and fasten in position with adhesive tape.
- Remove bolts and remove window regulator.
- For power windows, disconnect connector

Note:

Door glass to window regulator, installing ⇒ *Page 58-8* .

58-7

Door window glass, removing and installing

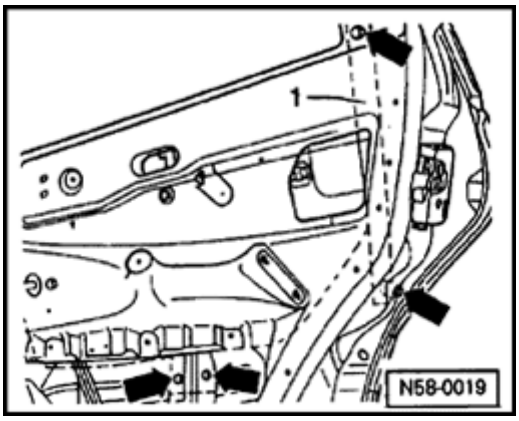

- Lower window.
- Remove trim panels (triangular trim inside and outside).
- Remove window channel -1- and take up and out of window slot.
- Remove window glass from window regulator.

58-8

Door window glass, installing

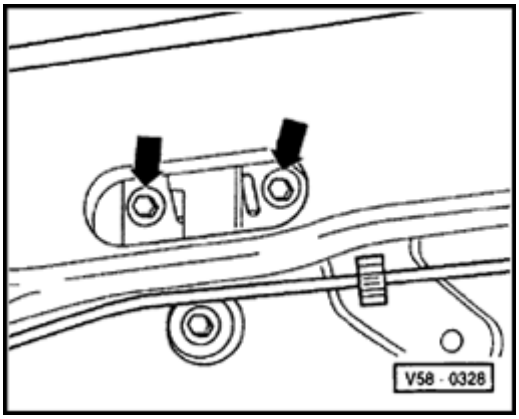

- Install glass hand-tight to window regulator.
- Raise window fully and then lower again slightly.
- Lift window at front slightly to avoid it running out of window channel.
- Tighten bolts -arrows- through opening, 7 Nm (62 in. lb).

58-9

Outer window channel, removing

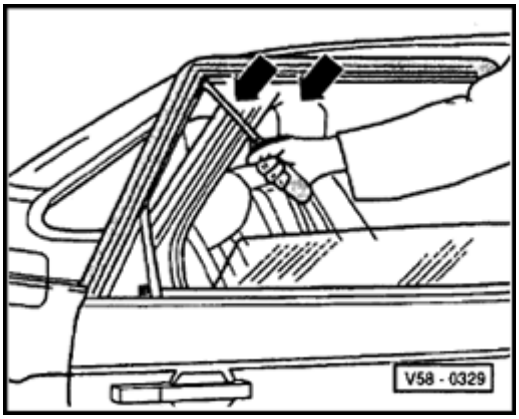

- Remove triangular trim plates.
- Pull off outer window slot seal from flange.
- Pull off inner window slot seal from flange
- Starting at rear top corner, pry off outer window channel from flange.

Outer window channel, installing

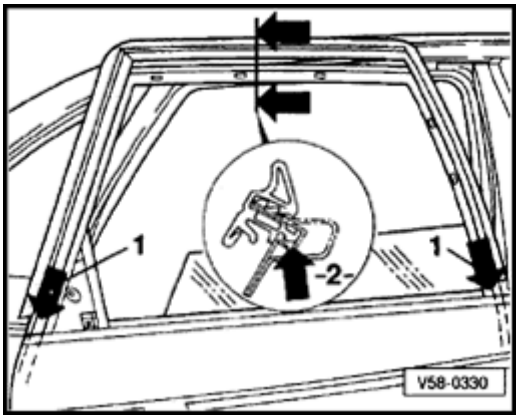

- Install window channel into window slot in front and rear (arrow 1).
- Press down on window channel and starting at top corner, press onto flange.
- Retaining lip -arrow 2- must engage fully.

58-11

Lift channel, installing on window glass

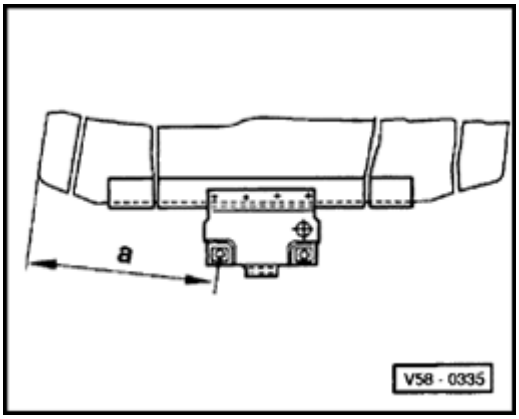

- Press lift channel onto glass: a = 384 mm.

Rear window regulator, servicing

- Rear window regulators, removing ⇒ Page 58-6 .

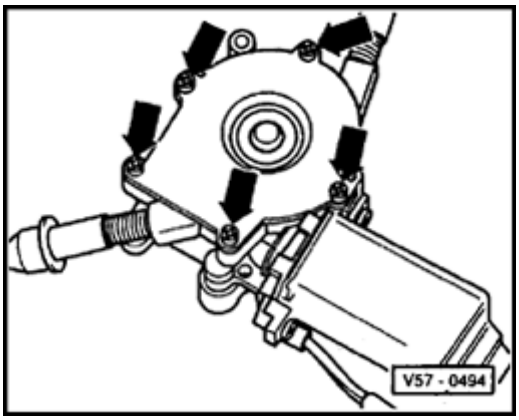

- Remove screws for gear cover -arrows-.

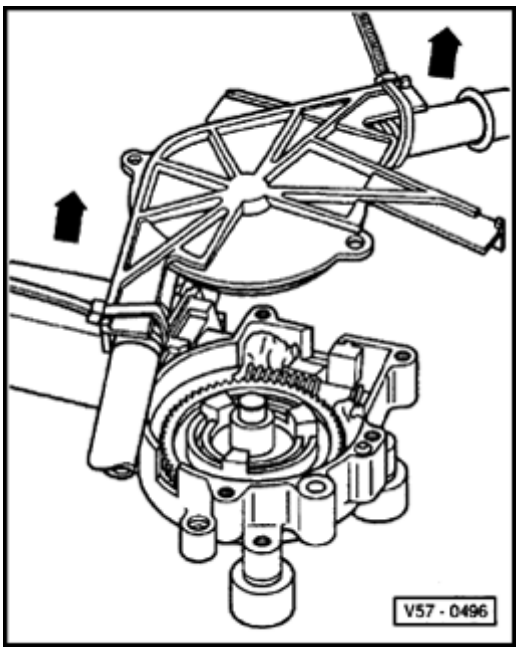

- Pull cable drum off gear housing in direction of arrow by rocking slightly in alternate direction.

58-13

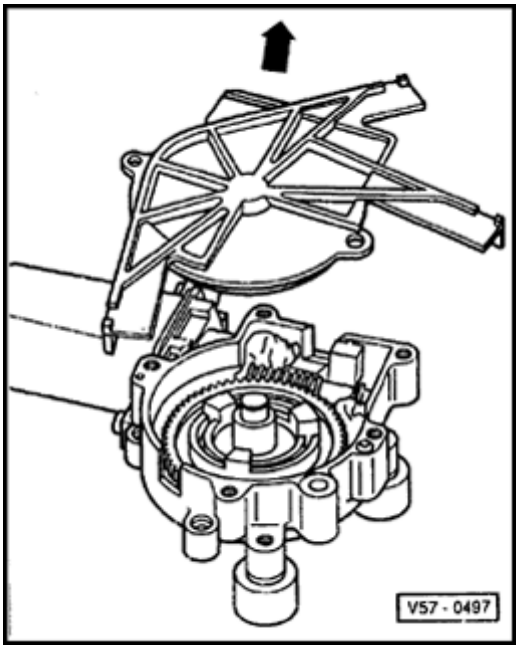

- Pull off cover of new motor in direction of arrow.

Note:

Surfaces covered with grease must not be contaminated with dirt or dust. For additional grease use G 000 450 02.

58-14

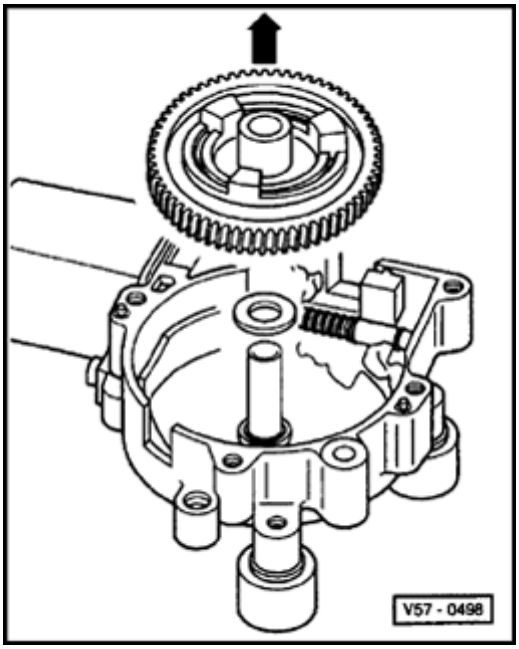

- Pull drive gear off gear shaft in direction of arrow. Note spacer washer.

CAUTION!

The damping element -1- must fit exactly in the recesses of the cable drum.

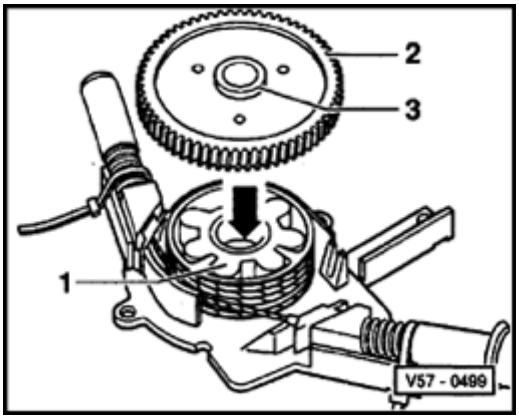

- Install drive gear -2- in cable drum. Install spacer washer -3- onto drive gear.

58-15

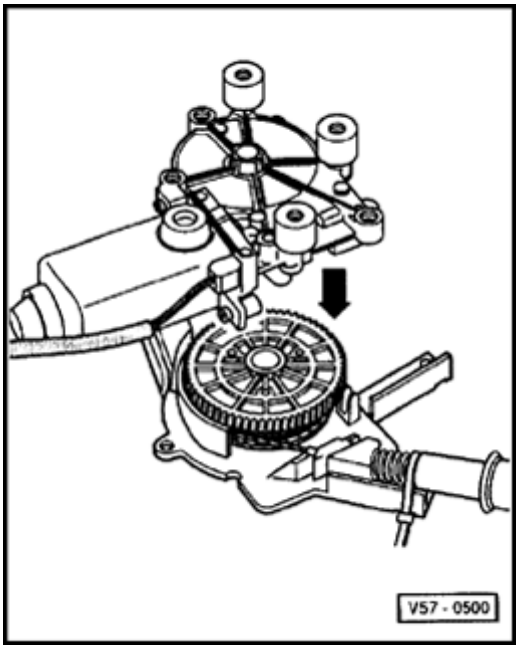

- Install motor for window regulator together with cable drum in direction of arrow.

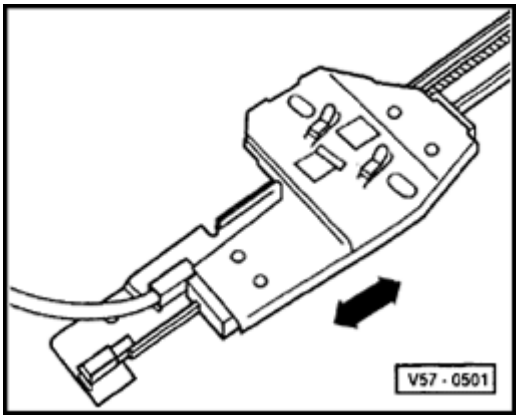

- If cable drum and gear housing are difficult to be joined to stop, turn drive gear by slightly pushing follower until drive gear engages.

58-16

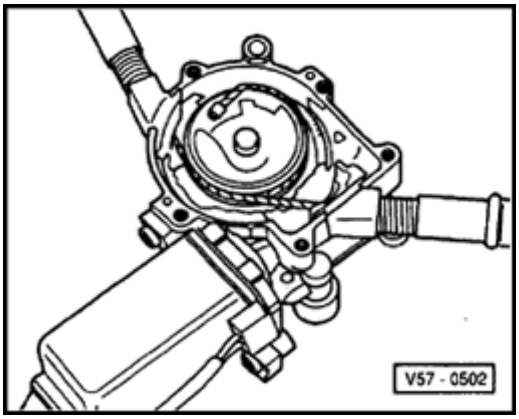

- Check correct cable position on cable drum.

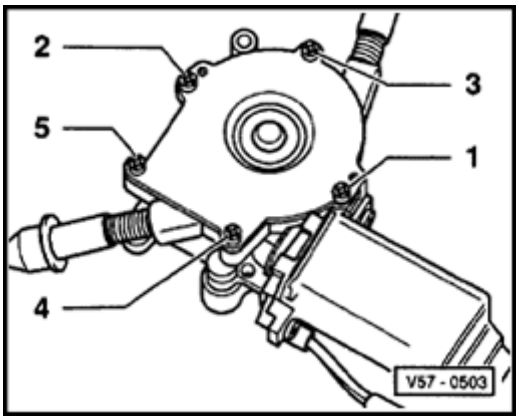

- Install screw and tighten in numbered sequence to 3 Nm (27 in. lb).

Notes:

- *Before installing window regulator, check proper functioning.*
- *Replacement of mechanical parts (linkages, cable) is done in the same way.*

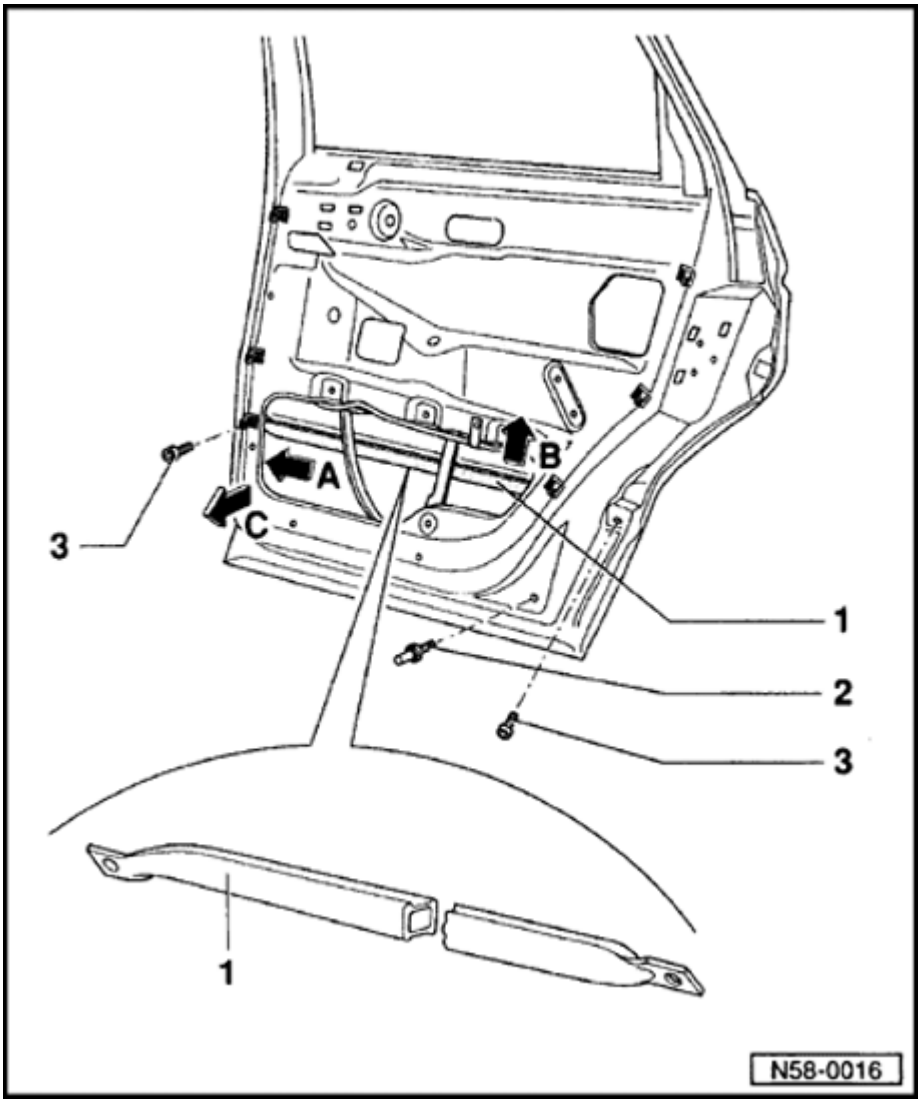

Side reinforcement, removing and installing

Note:

Remove door trim, moisture barrier and protective strip.

1 - Side reinforcement

- Removing:
  - Remove Torx bolts - 3 -.
  - Slide side reinforcement forward (arrow -A-) and then guide it backward and up (arrow -B-).
  - First remove front of reinforcement bar from door (arrow -C-).

2 - Catch pin

3 - Torx bolt

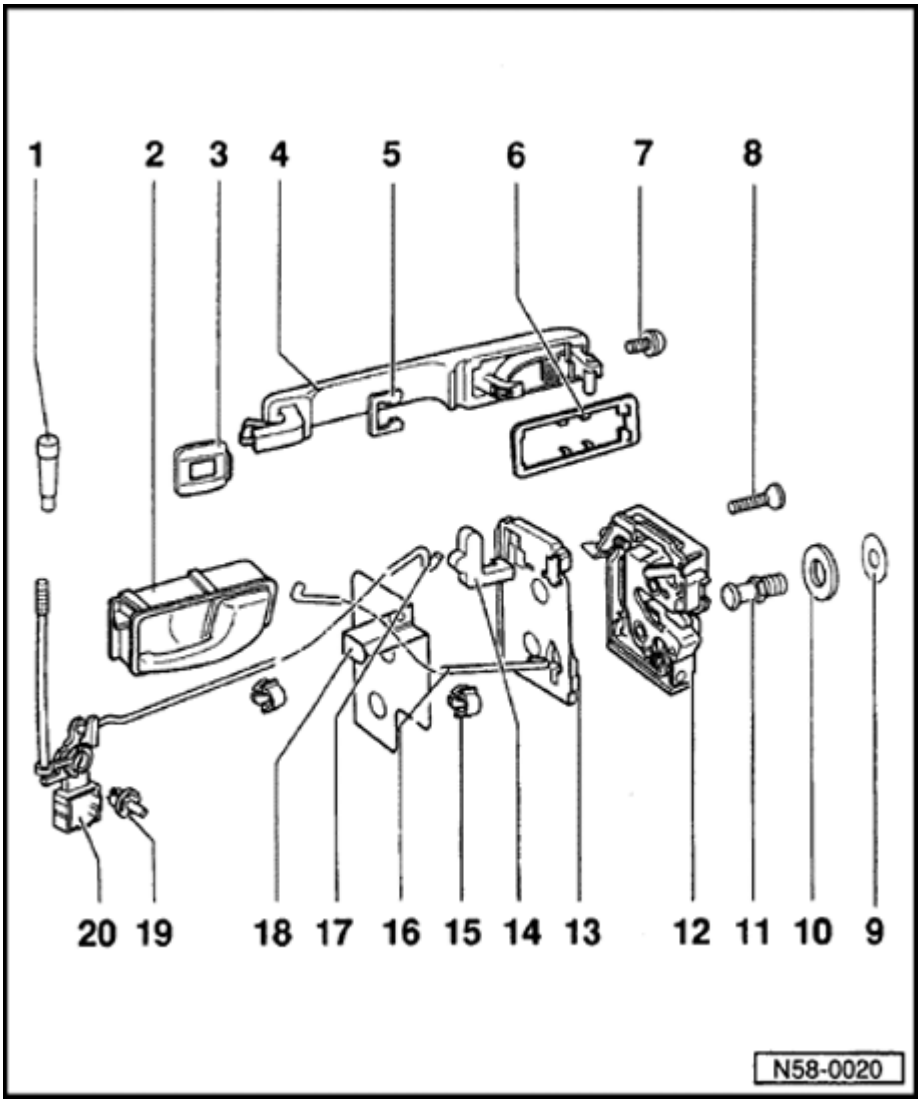

Door lock assembly

1 - Locking knob

2 - Inner release handle

- Removing ⇒ Page 58-23

3 - Backing plate

4 - Door handle

- Removing and installing ⇒ Page 58-21

5 - Clip

6 - Backing plate

7 - Screw

- 7 Nm (62 in. lb)
- Right side: left-hand thread, flat black finish.

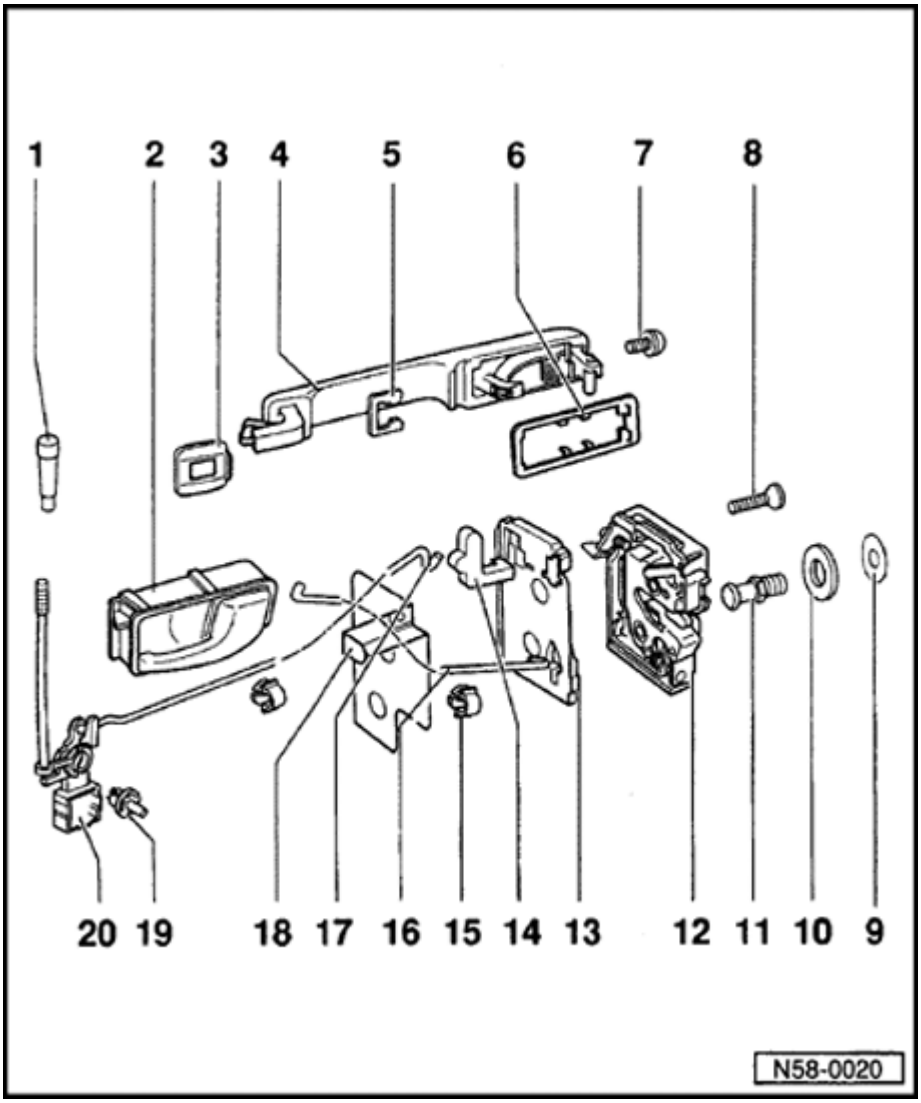

8 - Screw

- 20 Nm (15 ft lb)

9 - Dished spring washer

- Collar must face outward.

10 - Plastic washer

11 - Striker pin

- 50 Nm (37 ft lb)

12 - Door lock

- Removing and installing ⇒ Page 58-22
- Free play adjustment ⇒ Page 57-28

13 - Backing plate

- Only install with matching door lock.

58-20

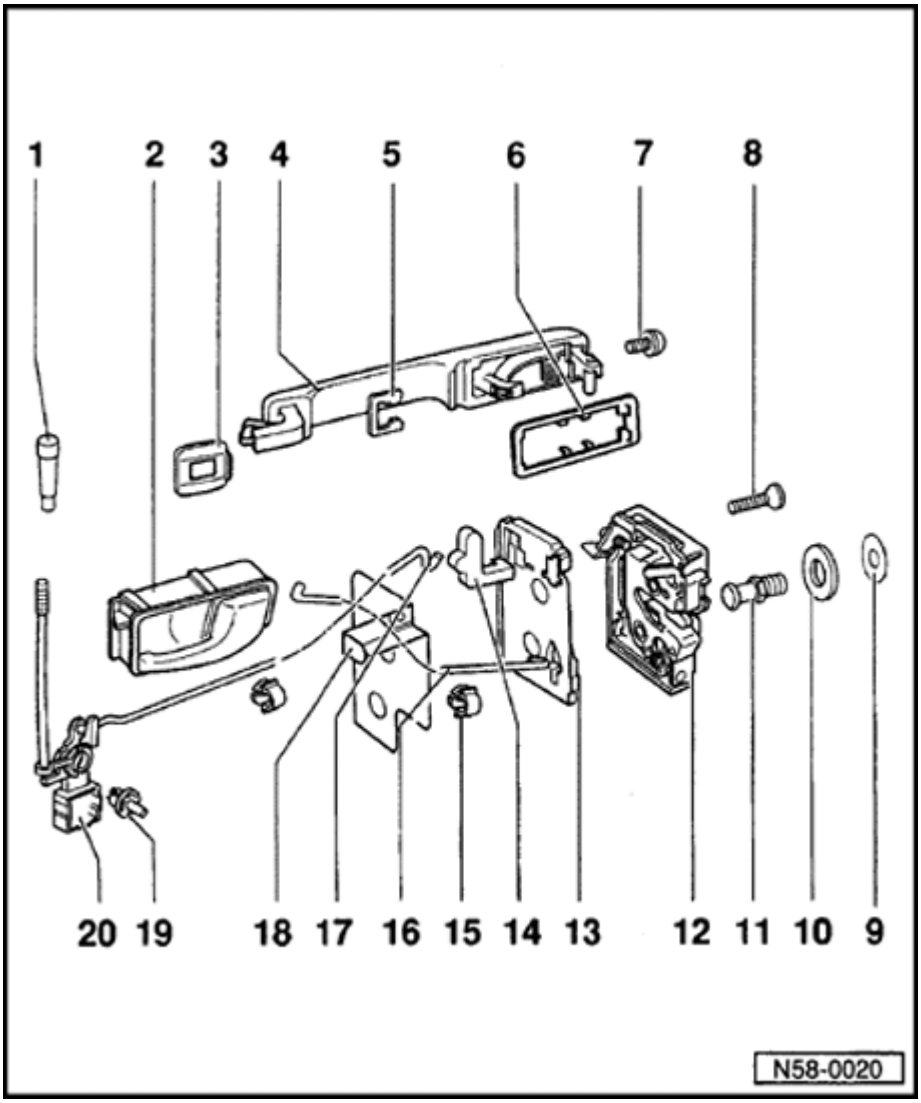

14 - Locking lever

15 - Clip

16 - Pull rod

- Attach to door release mechanism from below.

17 - Locking rod

18 - Anti-theft protection

19 - Spreader rivet

20 - Relay lever

Door handle, removing and installing

With central locking system: Remove rear trim, carefully remove moisture barrier at the rear and disconnect electrical connector.

Note:

Right screw has left-hand thread and flat black finish.

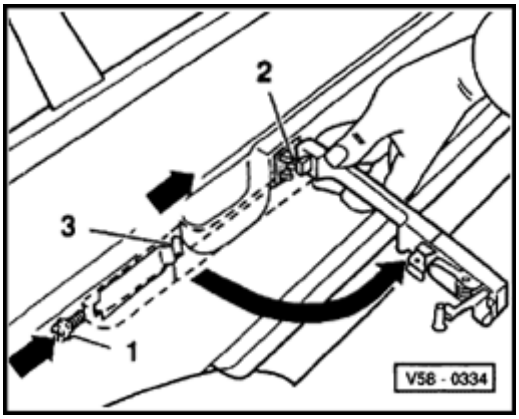

- Remove screw -1- (7 Nm (62 in. lb).
- Push door handle in direction of arrow and swivel out of door.

Installation note:

- Check backing plate -2- and clip -3- for damage.

Door lock, removing and installing

Note:

The hole on the rear door lock is covered up by the lever for child safety lock

- Unclip cover cap.

- Remove screw.

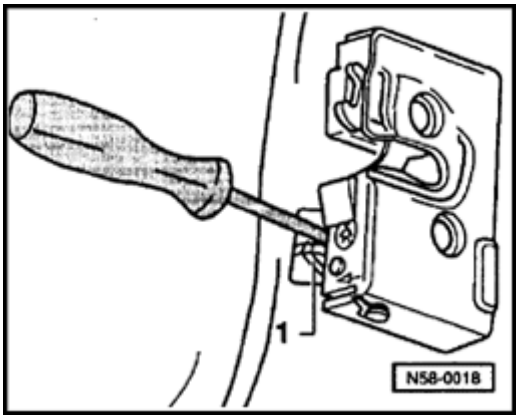

- To remove and install, lock operating lever -1- on side with screwdriver.
- Press locking sleeve off door lock.

58-23

Inner release handle, removing

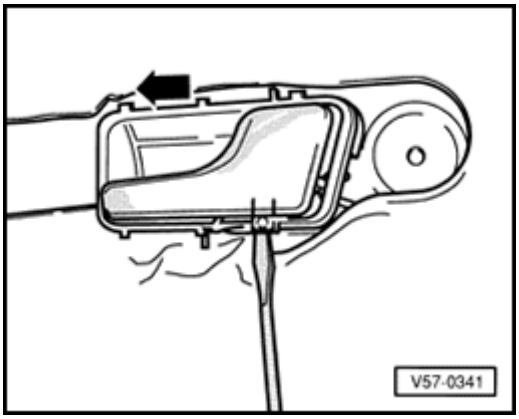

- Press out securing clip from hole in door panel.
- Press out release handle in driving direction from securing holes.

Door inner seal, removing

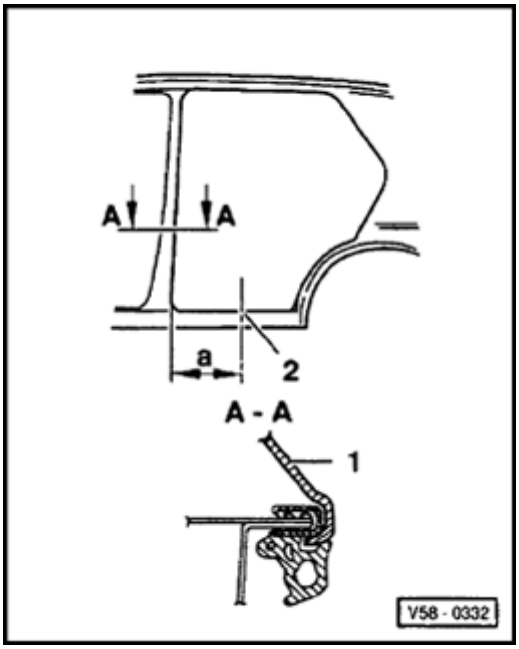

- Remove door trim ⇒ Page 70-38 .

Door trim -1- covers door inner seal.

- Joint -2- is under door sill plate. Dimension a = 360 ± 20 mm.

Sliding/tilting roof

Special tools and equipment

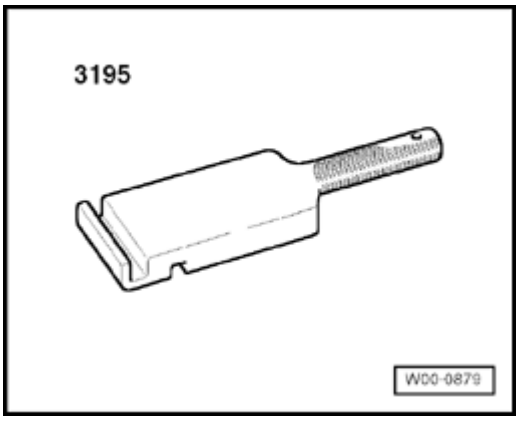

- 3195 Installation lever

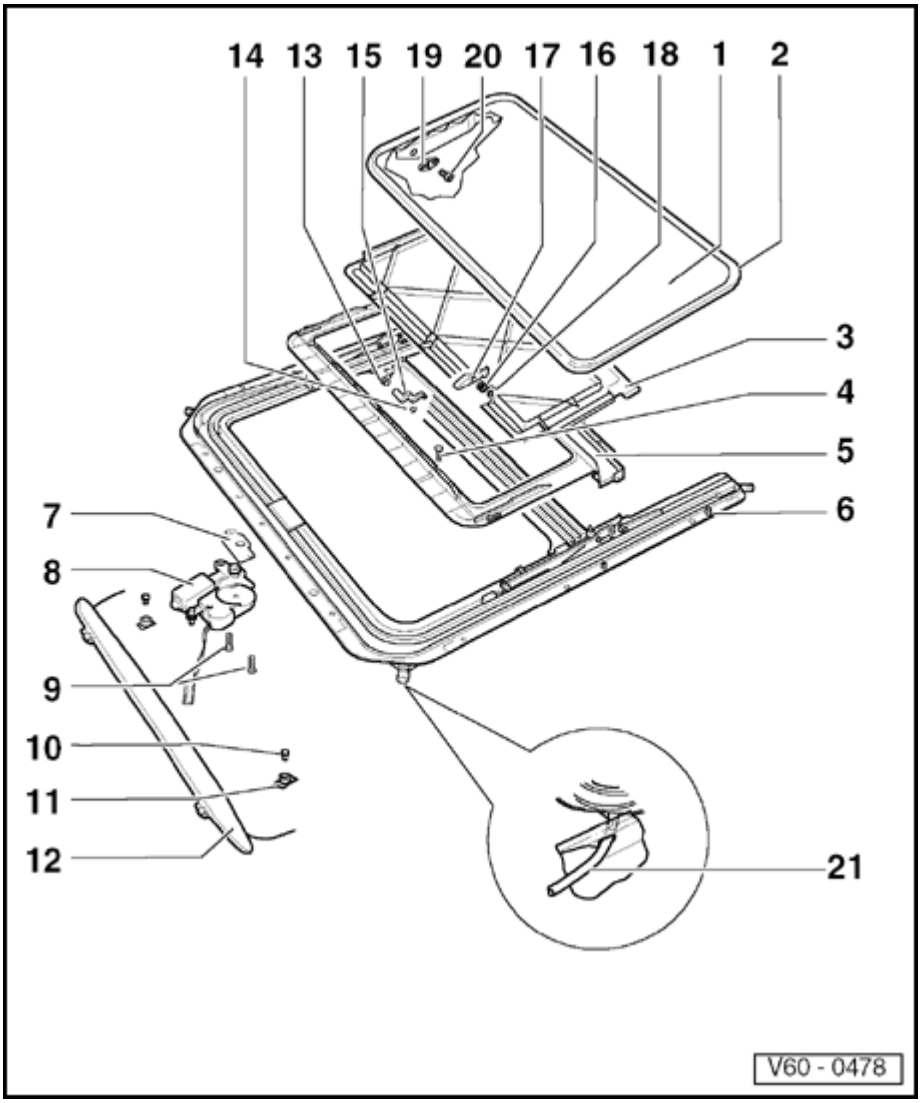

Sliding/tilting roof, component overview

1 - Panel for sliding/tilting roof

- Removing ⇒ Page 60-6
- Installing ⇒ Page 60-8
- Adjusting ⇒ Page 60-10

2 - Panel seal

- Seal joint is in the center of right side section.

3 - Flap for flap headliner

4 - Screws

5 - Headliner for flap (includes flap - 3 -)

- Removing ⇒ Page 60-12

60-3

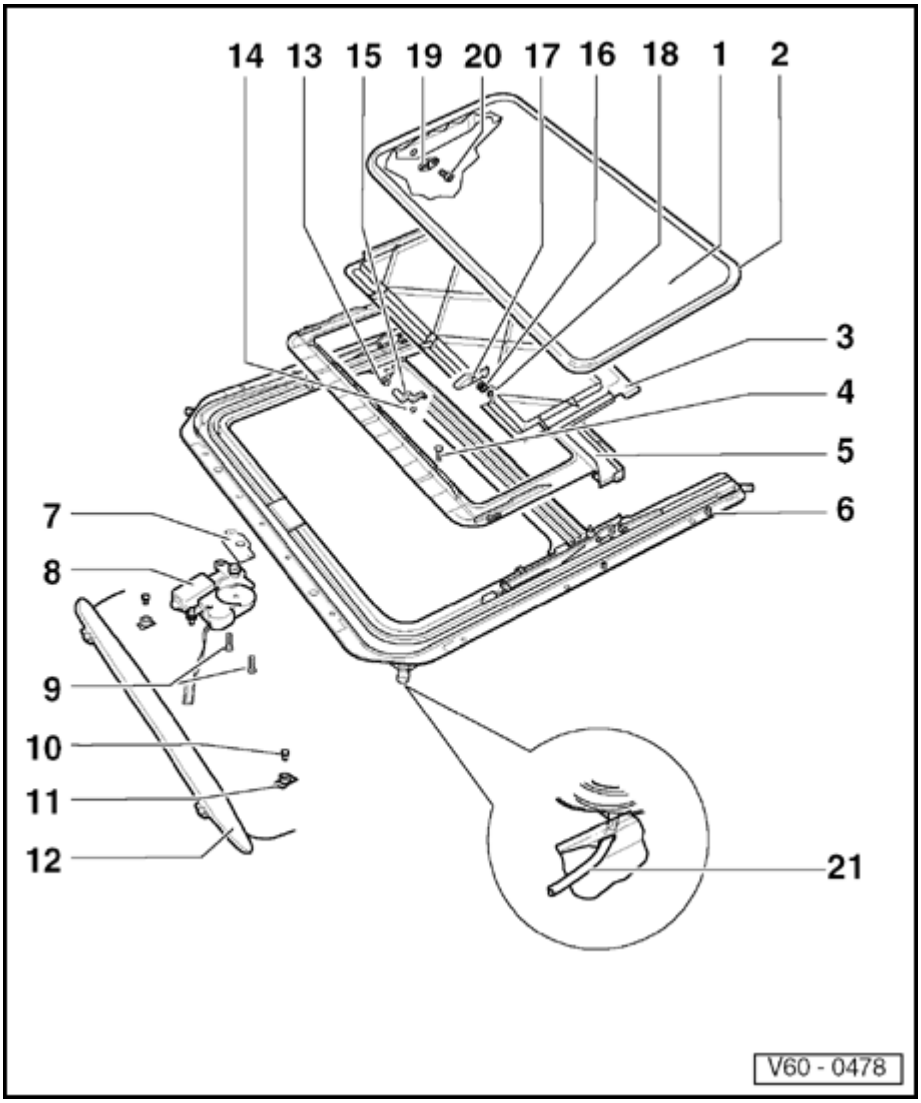

6 - Sliding/tilting roof assembly

- Removing ⇒ Page 60-16
- Assembly contains the following parts:
  - U-frame with guide channels. (If required, grease guide channels only with special grease G 000 450 02, otherwise function may be impaired. Never use multi-purpose grease.)
  - Cable guides, rear with cables
  - Guides, front

7 - Spacer plate

8 - Cable drive (electrical)

- Cable drive, checking parking position ⇒ Page 60-15

60-4

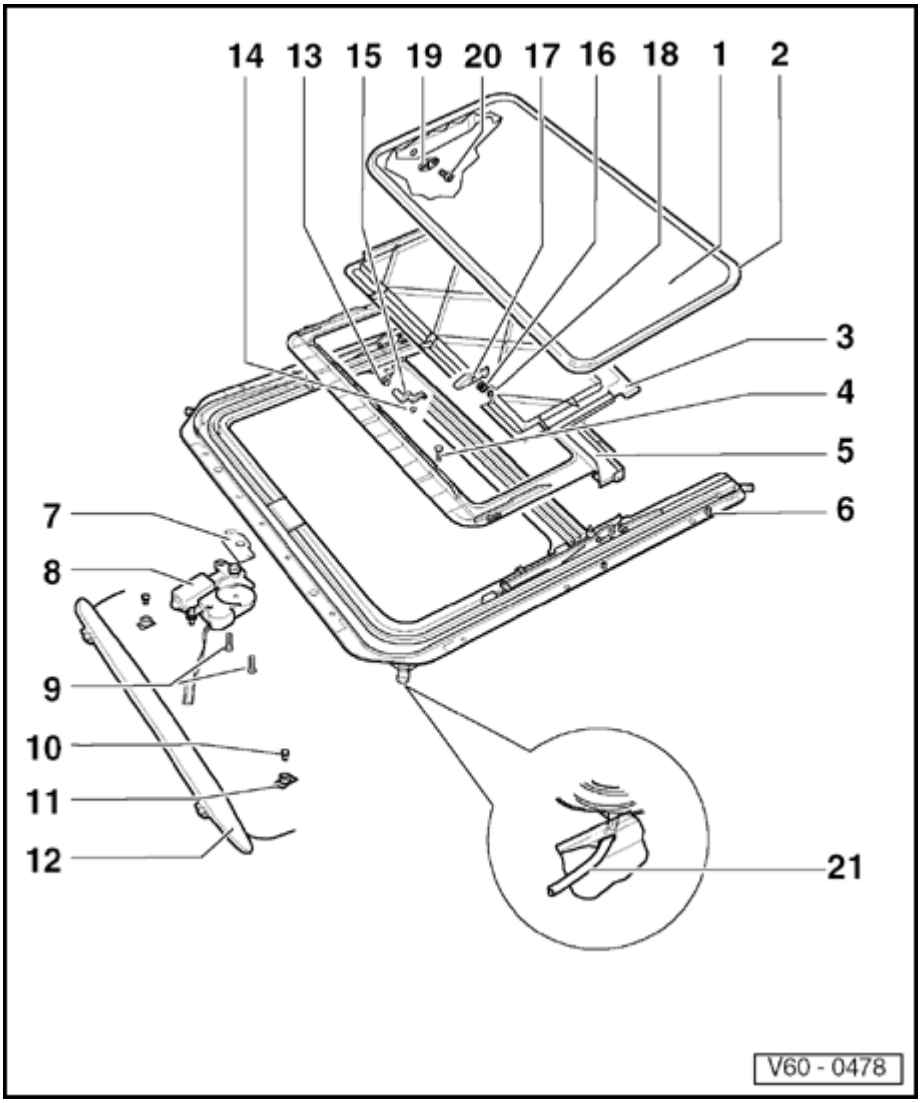

9 - Counter-sunk screws (coated)

- Before installing, clean threads with wire brush and coat with locking fluid D 185 400 A2.
- 3 Nm (27 in.lb)

10 - Wind deflector mounting screws

11 - Threaded plug

- Thread must point slanted to the rear.

12 - Wind deflector

- Move panel to the rear to remove wind deflector.

13 - Tilt lever spring

14 - Circlip

15 - Tilt lever

- Tilt lever must press on guide rail through spring pressure.

60-5

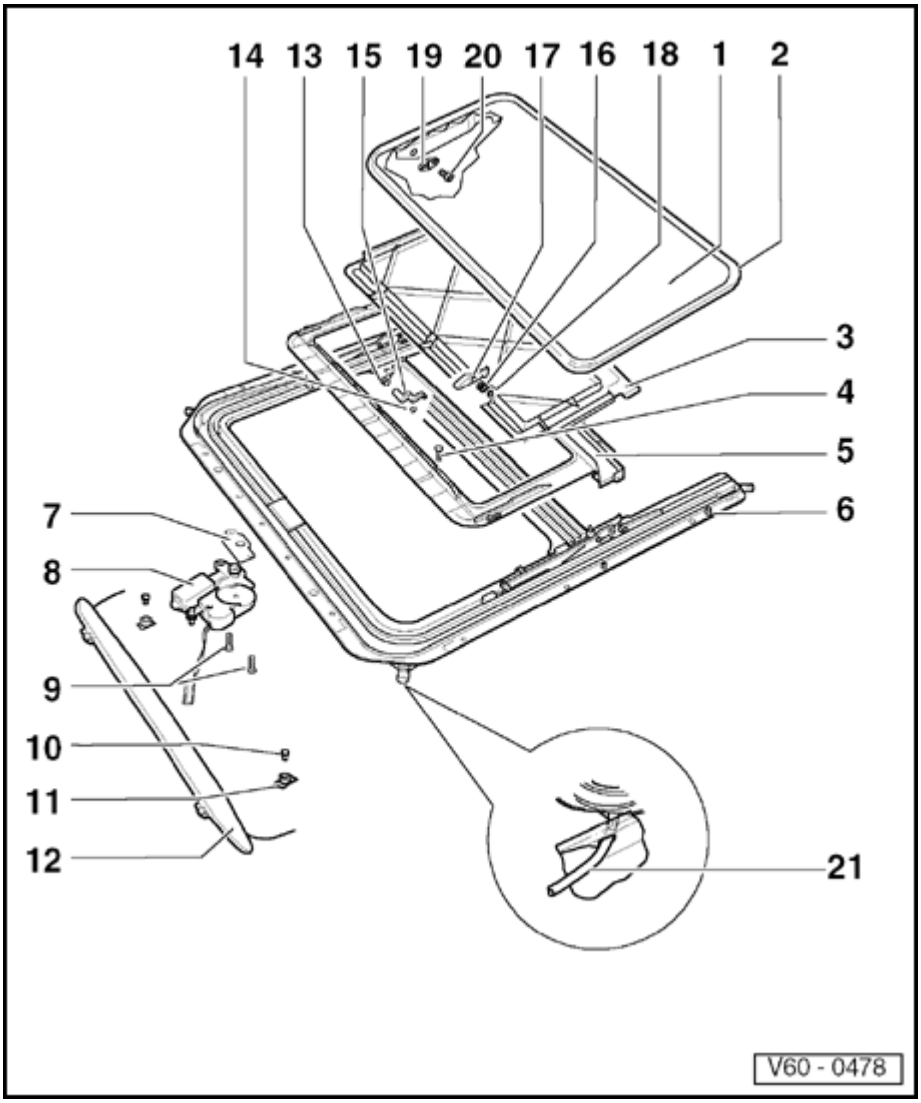

16 - Locking lever spring

17 - Locking lever

18 - Circlip

19 - Adjusting plate

- Part of sliding block.

20 - Torx screw (Torx key T 25)

- Note installation position ⇒ Page 60-9
- 6 Nm (53 in. lb)

21 - Water drain hose

- Cleaning ⇒ Page 60-19

Sliding/tilting roof panel, removing

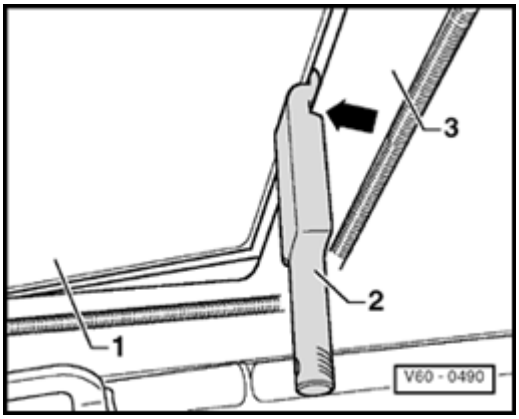

- Tilt sliding/tilting roof up.
- Pull down panel -1- with special tool 3195 until the special tool -2- can be engaged into flap liner -3-.

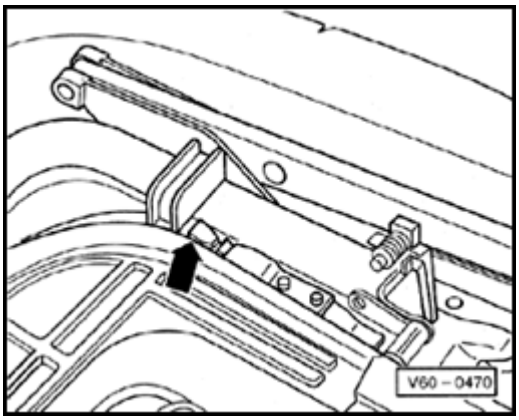

- Pull off flap liner with special tool 3195 from guides (arrow). Pound with your fist on special tool until flap liner disengages. Push it back until special tool touches roof opening.
- Disengage tool and push flap liner back fully.

60-7

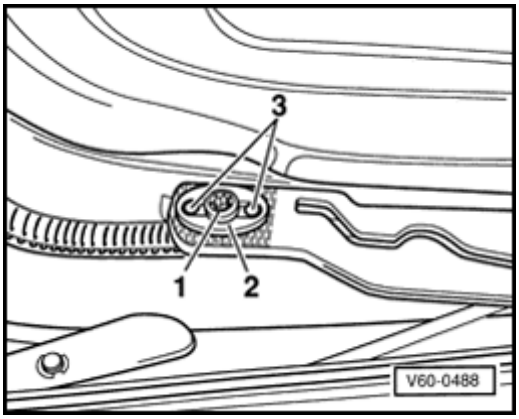

- Remove Torx screw -1- (Torx key T25).

Note:

Adjustment plates are part of the connecting piece guide.

- Remove roof panel up and out.

Sliding/tilting roof panel, installing

Move panel to "0 position" (parked position).

0-position

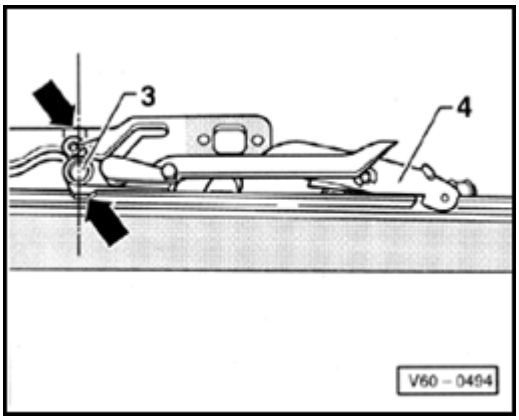

Pins -3- must be within notches (arrow).

Locking levers -4- must be engaged in the guide rails.

If not, ⇒ Parallel alignment, checking and adjusting, ⇒ Page 60-10 .

- Position panel from above and install screws between sliding block and panel.

- Slightly tighten screws (Torx key T25).

Notes for installation:

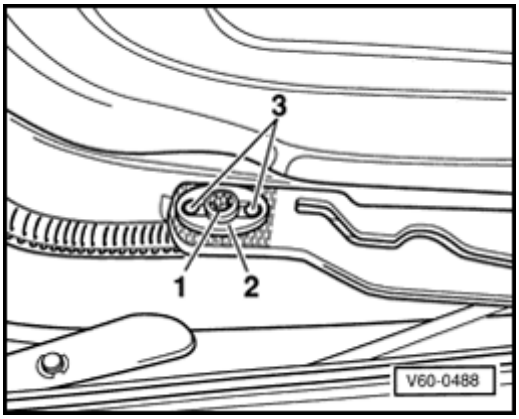

- *When inserting Torx screws -1- note correct position of adjustment plate -2-.*
- *Guide pins -3- are located in the elongated holes of the adjustment plate.*
- *Tighten screws after glass panel height adjustment (6 Nm). Glass panel height adjustment ⇒ Page 60-14 .*

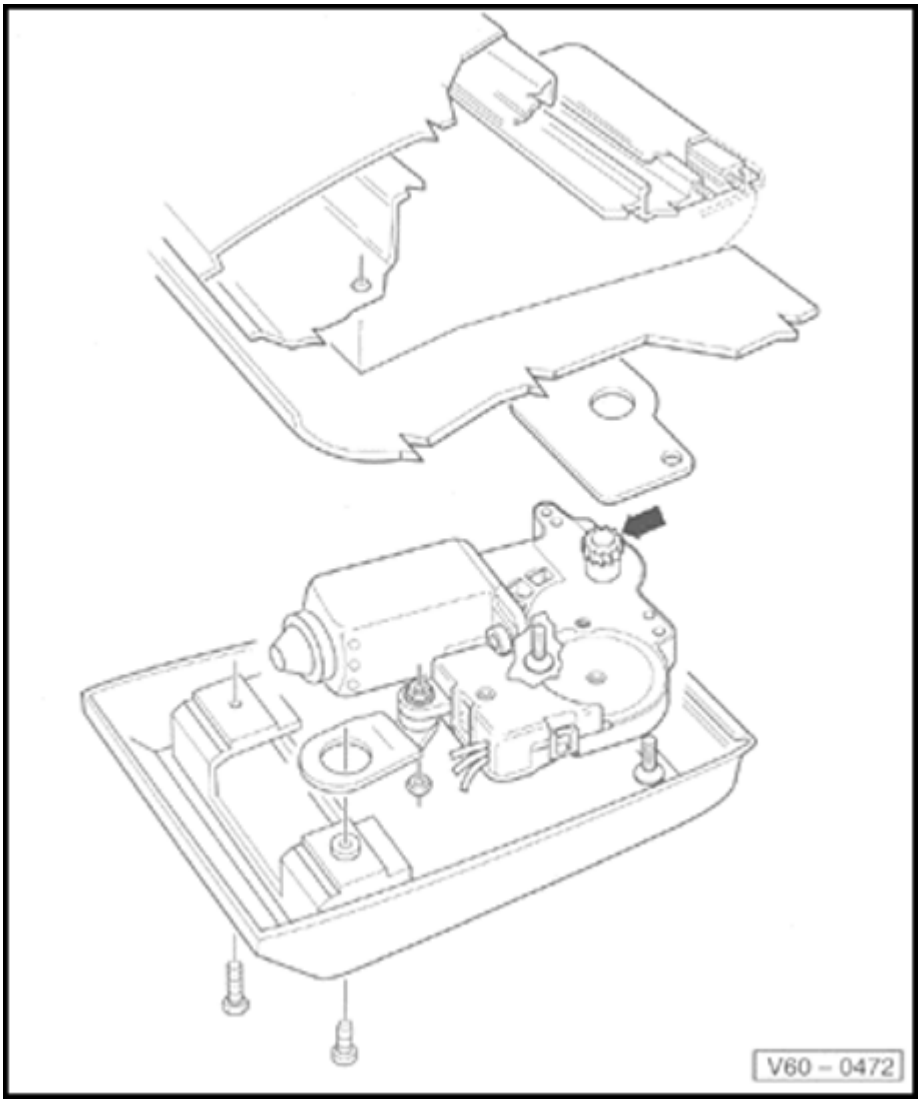

Parallel alignment, checking and adjusting

Checking and adjusting can be done with installed panel and pushed back panel liner.

- Disconnect battery ground cable
- Unclip interior light and remove cover for cable drive.
- Remove cable drive (screws are coated). Before installing, clean threads with wire brush and coat with locking fluid D 185 400 A 2.
- Tightening torque = 3 Nm (27 in. lb).

Note:

The drive gear must not be engaged with the cables.

60-11

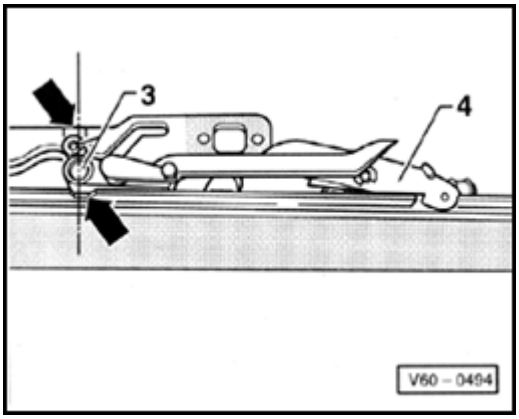

- Slide rear guides from front to rear only to markings (notches) (arrows).
- Pins -3- must be within markings (arrows).
- Locking hooks -4- must be engaged in guide rails.

Flap headliner, removing

- Tilt up sliding/tilting roof.

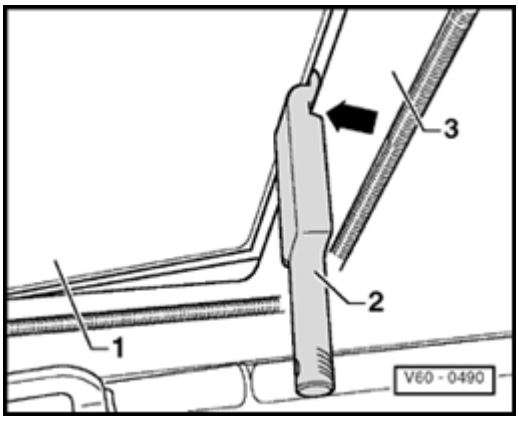

- Pull down panel -1- with special tool 3195 until special tool -2- can be engaged into flap headliner -3-.

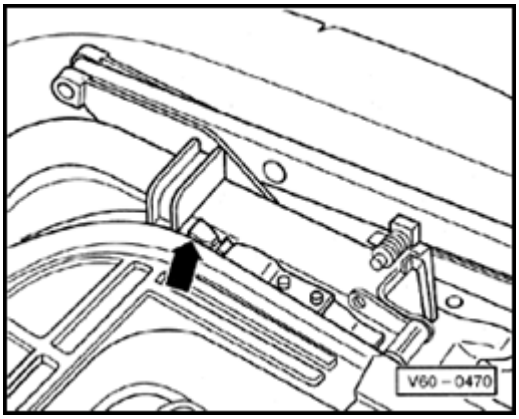

- Pull off liner with special tool 3195 from guides (arrow). Pound with your fist on special tool until liner disengages. Push it back until special tool touches roof opening.
- Disengage tool and push liner back fully.

60-13

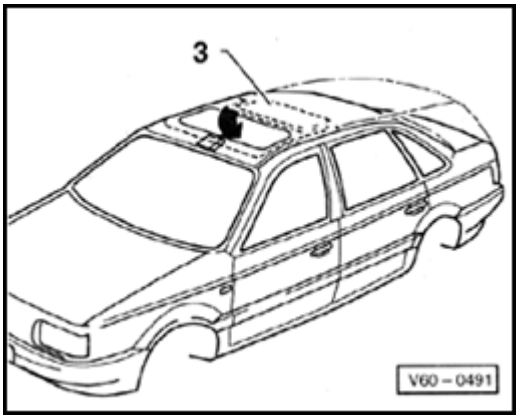

- Remove panel for sliding/tilting roof
- Lift flap headliner -3- slightly and turn by 90° and remove toward front from roof opening.
- Installation is in reverse order of removal.

Panel for sliding/tilting roof, adjusting height

- Check parallel alignment at rear, if necessary adjust ⇒ Page 60-10 .

- To prevent wind noise, adjust height at front and rear according to illustration.

- Check height adjustment at end of radii of roof opening toward vehicle center. Panel must not be higher at front or lower at rear than roof.

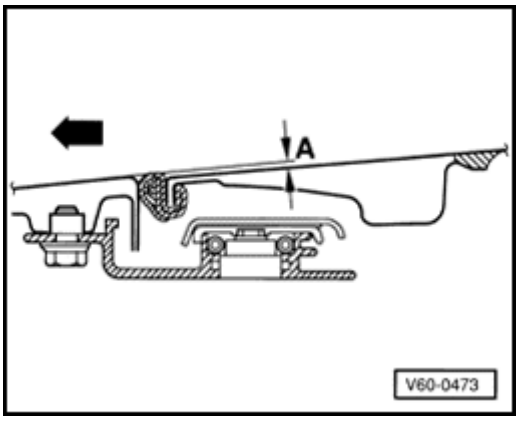

➢ Panel adjustment front: a = 1 mm lower than roof.

Arrow = direction of travel

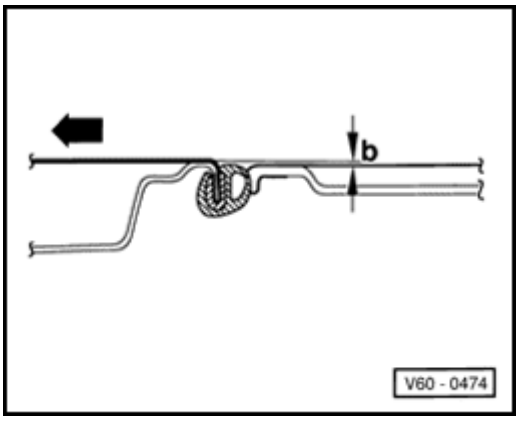

➢ Panel adjustment rear: b = 1 mm higher than roof.

Arrow = direction of travel

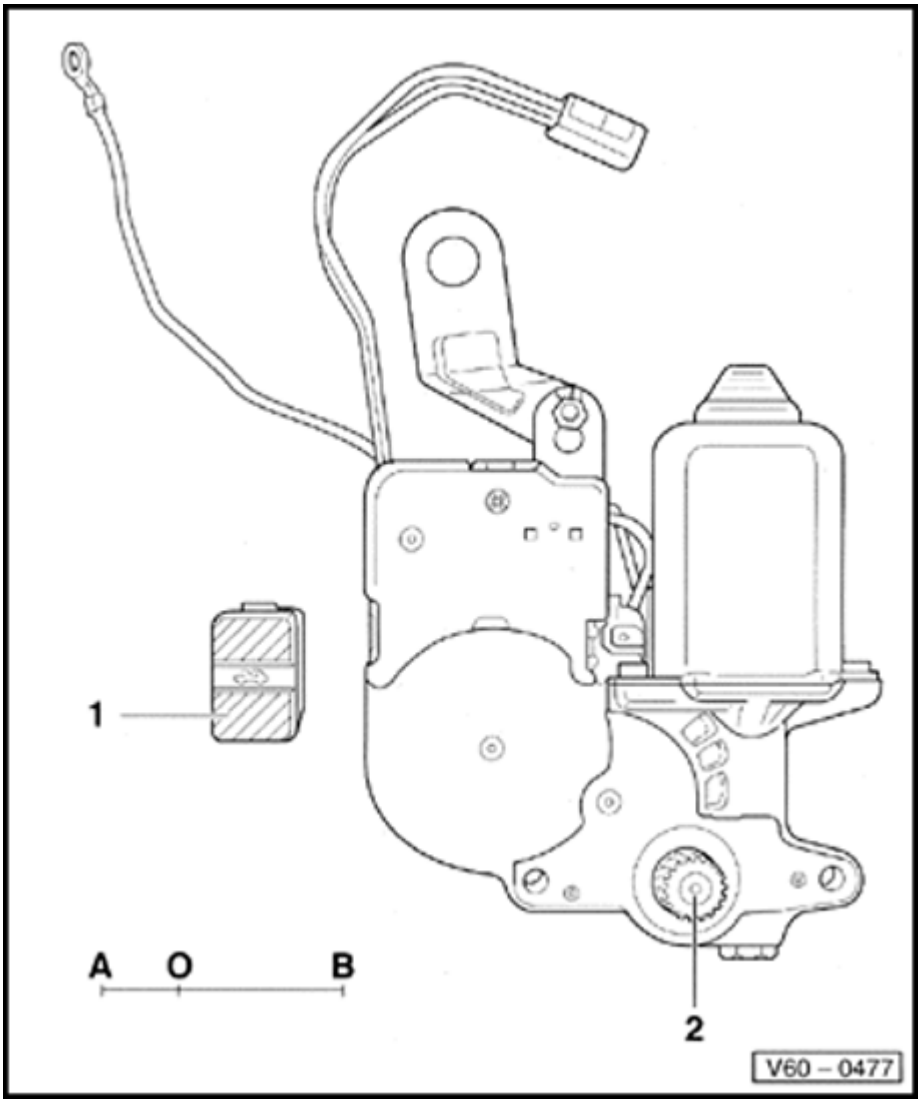

Cable drive, checking 0-position

If the cable is replaced, the cable drive must be installed in the "0-position" (panel for sliding/tilting roof closed).

- Operate switch -1- and count revolutions of drive pinion -2-: "0-position" of cable drive is between end switch-off points -A- and -B-. End switch-off point is obtained by turning drive pinion clockwise. End switch-off point -B- is obtained by turning pinion counter-clockwise.

-A- End switch-off point for tilt-up function = 2 turns to 0-position.

-B- End switch-off point for sliding function = 9 turns to 0-position.

Sliding/tilting roof assembly, removing

- Disconnect battery ground cable.

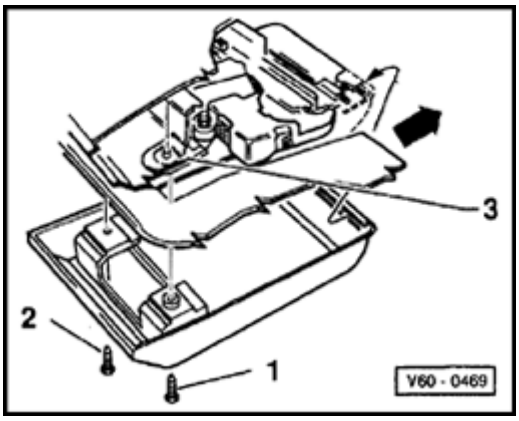

- Unclip interior light.
- Remove screws -1- and -2- and disengage cover for cable drive in direction of arrow.

Note:

Screw -1- also secures bracket -3-.

- Pull beading off molded headliner cut-out. To help in installation of replacement part, beading comes with a cord in clamping channel.

Notes:

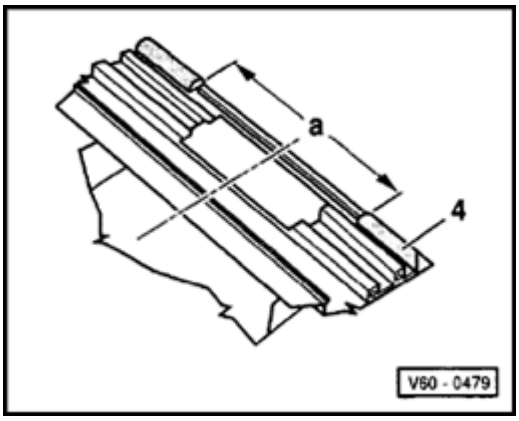

- *When installing, a space remains in the area of the cable drive. a = 180 mm.*
- *The space is marked by notches in the frame.*

- Remove trim on A-pillar, top of B-pillar, top of C-pillar and D-pillar.
- Remove headliner.

60-17

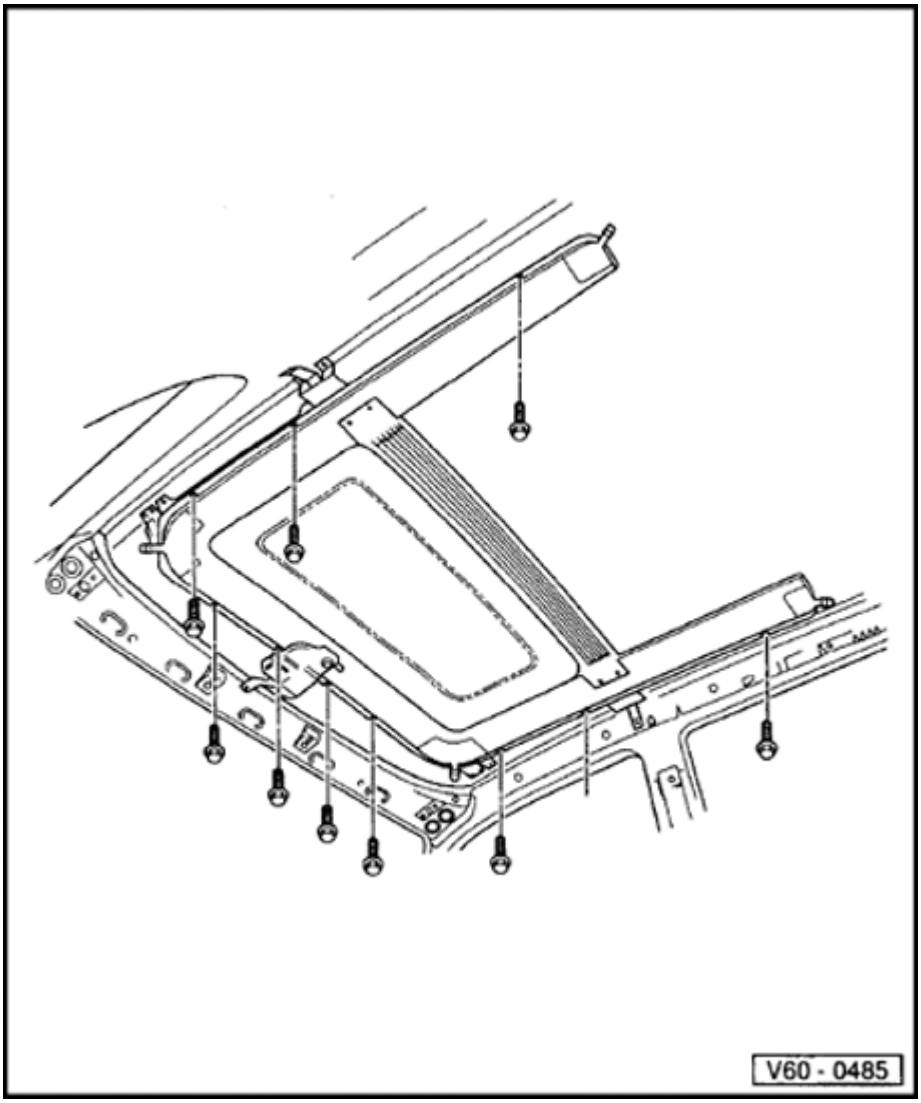

- Remove water drain hoses from assembly.
- Remove cable drive.
- Remove glass panel for easier access ⇒ Page 60-25 .
- Remove bolts and with help of second technician lift assembly out.

Note:

The assembly can also be removed as one unit.

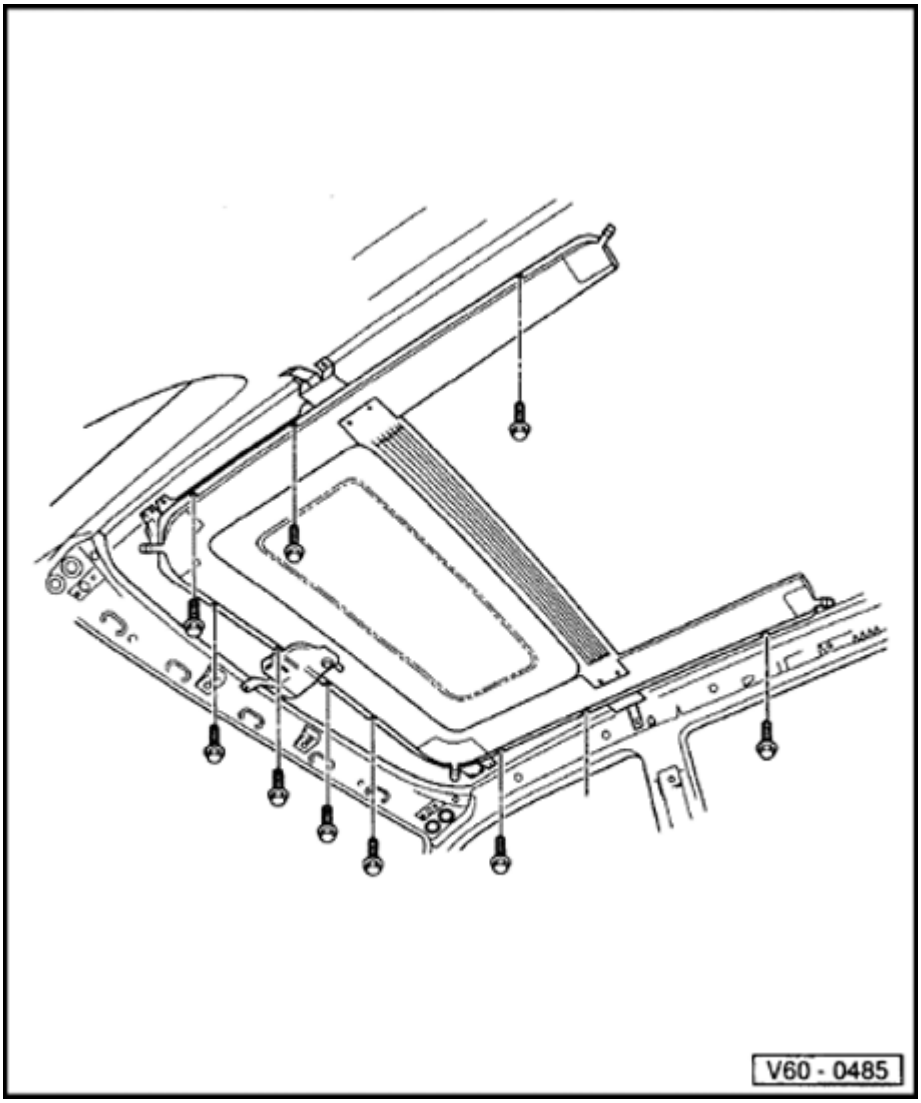

Assembly, installing

- Place roof assembly frame on rear mounting and move upward (three locating bolts must engage into mounting holes).
- Fasten frame assembly 7.5 Nm (66 in. lb).

Note:

If you are checking the function without the headliner, install the beading first ⇒ *Page 60-16* .

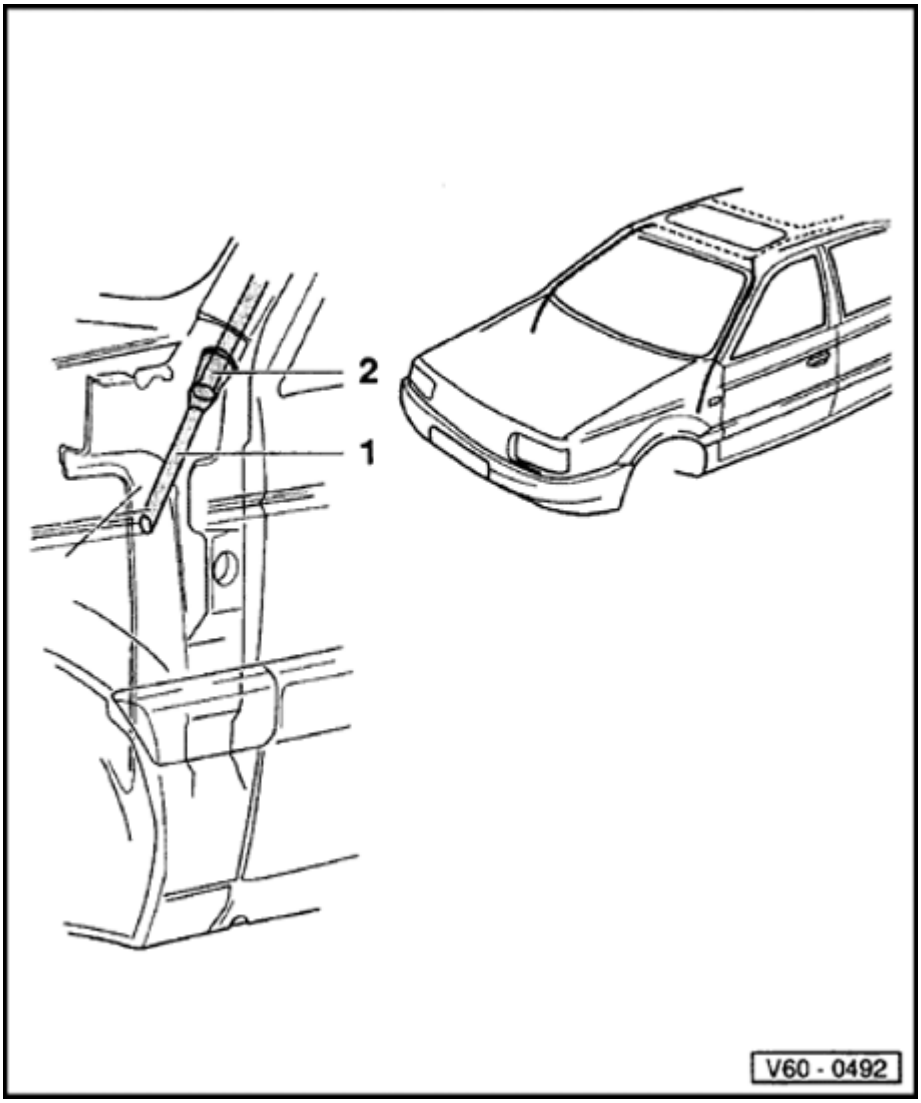

Water drain hoses, cleaning

Front drain hoses

The front water drain hose -1- is routed in the A-pillar and ends between the wheel housing and wheel liner. Cleaning is done from the opening in the sunroof.

1 - Front drain hose

- Only visible when wheel house liner is removed.

2 - Grommet for water drain hose

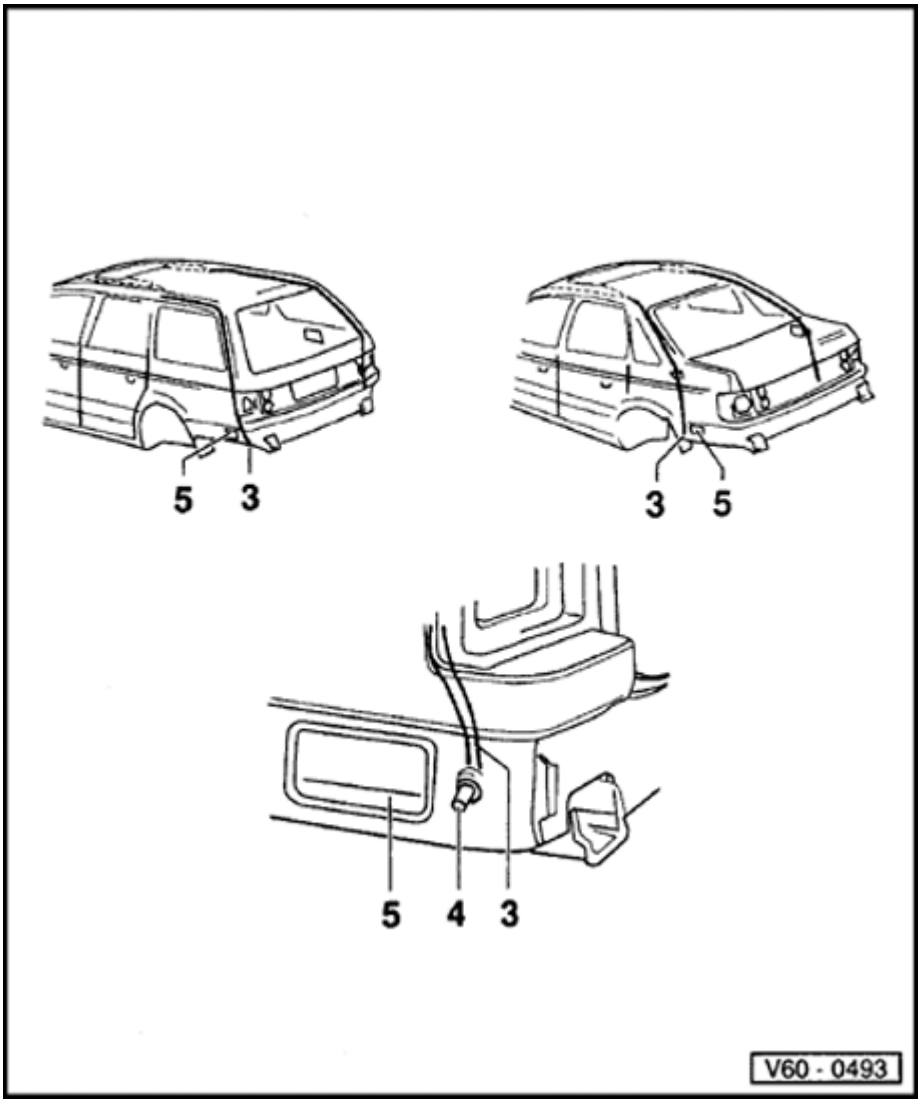

Rear drain hoses

The rear water drain hoses -3- are routed in the D-pillars and end on the sides of the bumper covers. Cleaning is done from the lower hose end. For this the bumper must be removed.

3 - Water drain hose

4 - Grommet for water drain hose

5 - Vent flap

Note:

For cleaning use a snake wire or old speedometer cable, about as long as the drain hoses. Remove the vent flaps first.

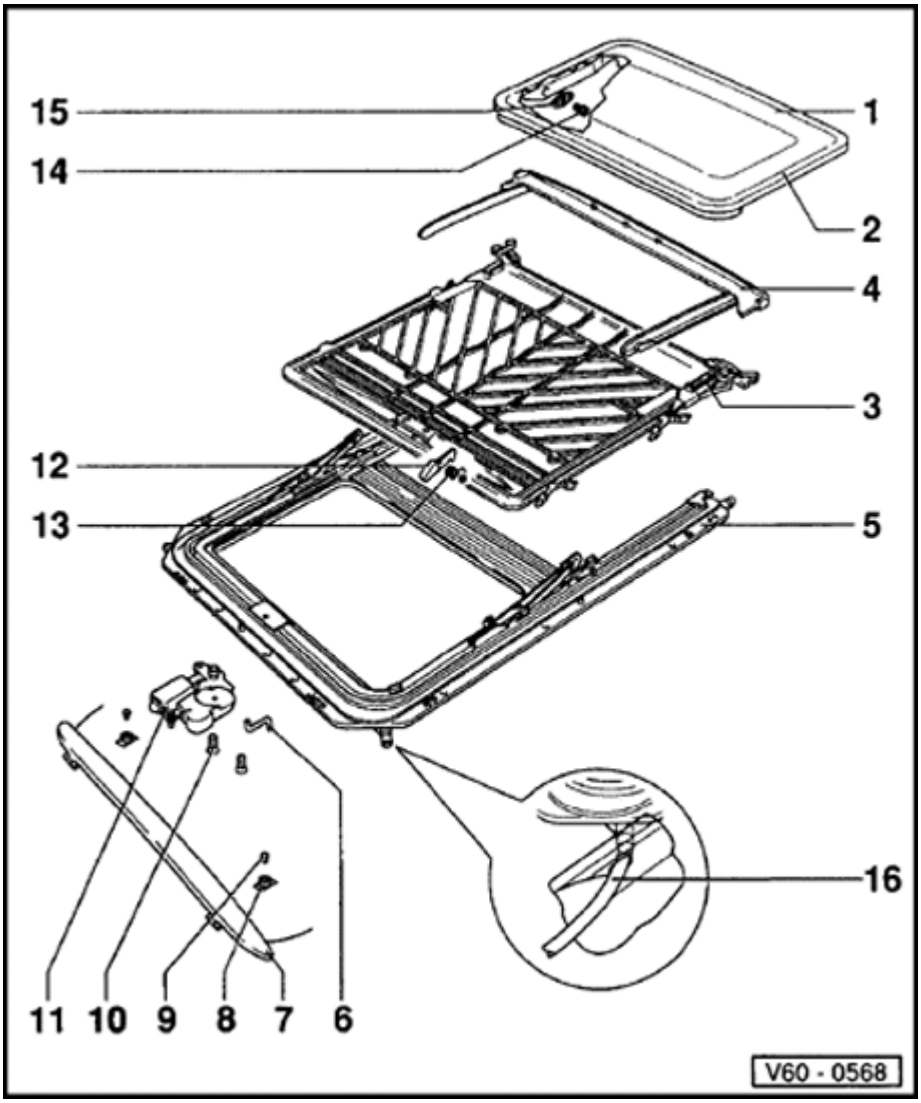

Sliding/tilting roof with glass panel

Assembly overview

1 - Glass panel for sliding/tilting roof (single pane safety glass)

- Glass panel for sliding/tilting roof, removing ⇒ Page 60-25
- Glass panel for sliding/tilting roof, installing ⇒ Page 60-27
- Glass panel for sliding/tilting roof, adjusting ⇒ Page 60-32

2 - Panel seal

- Adjusting ⇒ Page 60-26
- Seal joint is in center right area.
- Treat panel seal clamping channel with water as lubricant before installing.

60-22

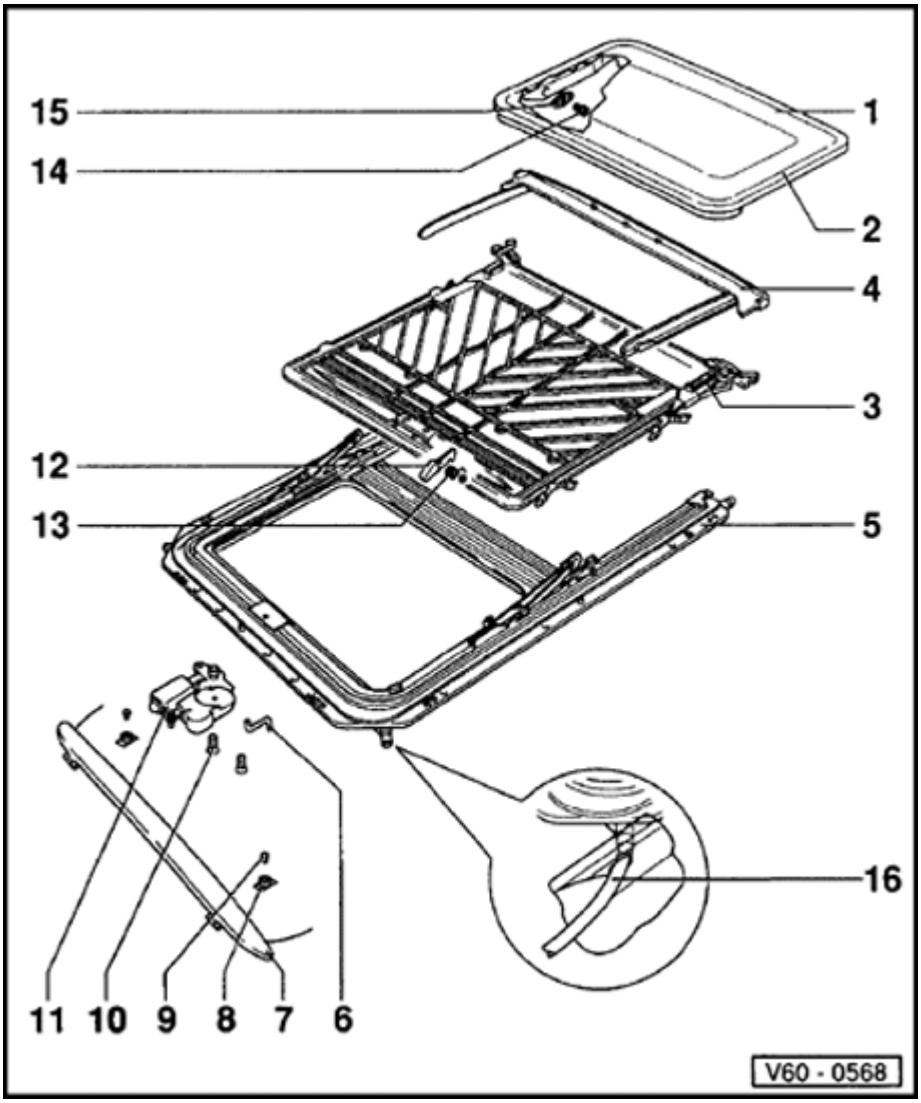

3 - Sliding headliner

- Removing and and installing ⇒ Page 60-28

4 - Trim frame

- Removing ⇒ Glass panel, removing

5 - Sliding/tilting roof assembly frame

- Removing ⇒ Page 60-16
- Assembly consists of the following parts:
  - U-frame with guide channels. If necessary grease guide channels only with G 000 450 02 , otherwise function may be impaired. Do not use multi-purpose grease.
  - Rear guides with cables
  - Front guides

60-23

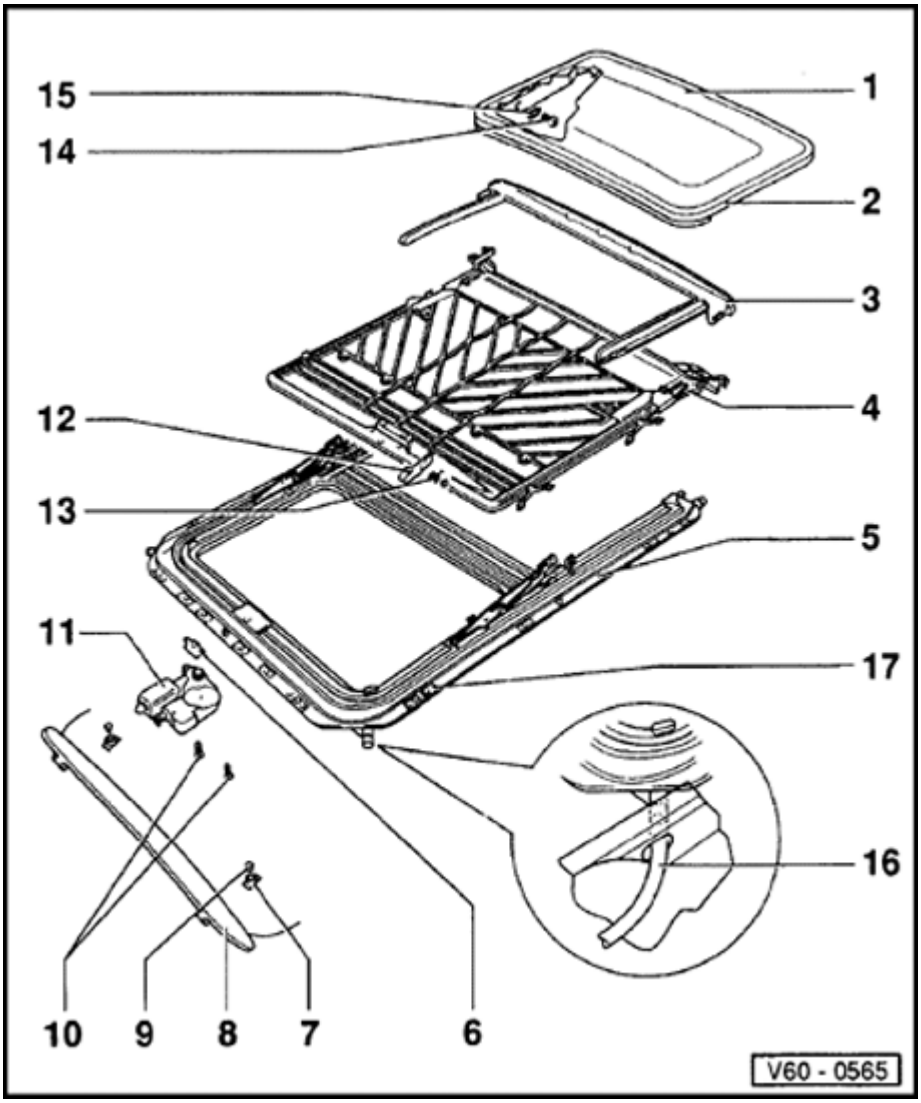

6 - Spacer plate

7 - Threaded piece for wind deflector mounting

- Thread must slant and point to rear.

8 - Wind deflector

- To remove, open panel to rear.

9 - Screws for wind deflector

10 - Countersunk screws (coated)

- Always use new screws.
- 3 Nm (27 in. lb)

11 - Cable drive

- 0-position, checking ⇒ Page 60-34

12 - Locking lever

60-24

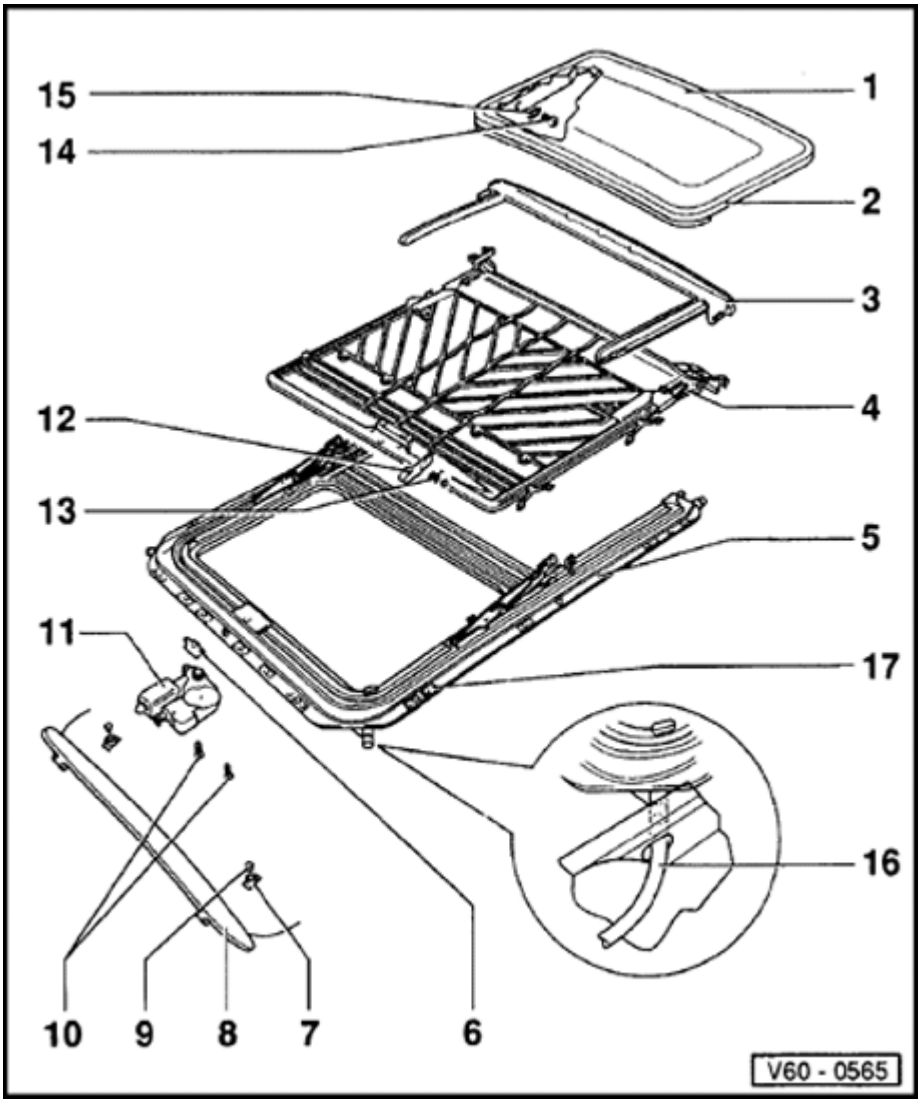

13 - Locking lever spring

14 - Torx screw

- Torx key T25
- 6 Nm (26 in. lb)

15 - Adjusting plate

- Part of frame

16 - Water drain hoses

- Cleaning ⇒ Page 60-19

17 - Spacer shims

- Attached to frame assembly.

60-25

Sliding/tilting roof glass panel, removing

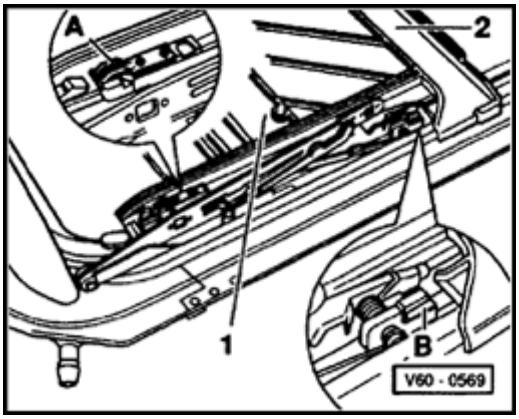

- Slide headliner -1- to rear.
- Slide trim frame -2- to the rear (clipped on in area of front guide -A- and guided at rear by guide -B-).

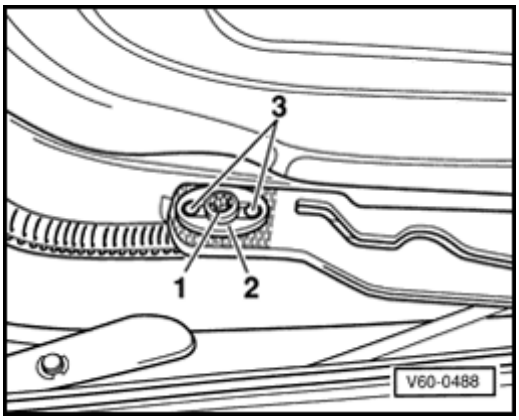

- Remove screws -1- (Torx key T25).
- Remove panel up and out.

60-26

Panel seal, adjusting

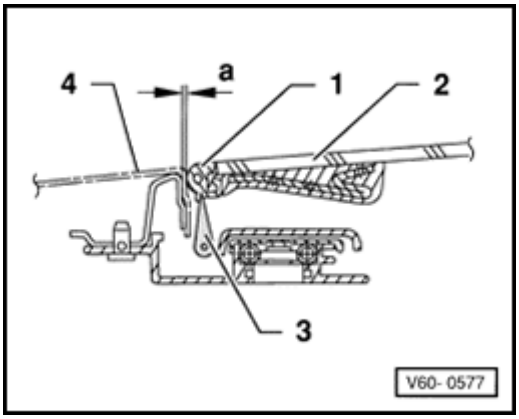

- Using a 0,3 mm thick paper strip (business card), check that pre-tension between panel seal -1- and body -4- is uniform all-around. It must be possible for paper strip to be pulled through under tension.
- If pre-tension is not enough, push panel seal apart using a wedge -3-. If pre-tension is too high, press it together. To adjust panel seal, glass panel -2- must be removed.

Glass panel for siding/tilting roof, installing

Panel must be installed in 0-position (sunroof closed).

0-position:

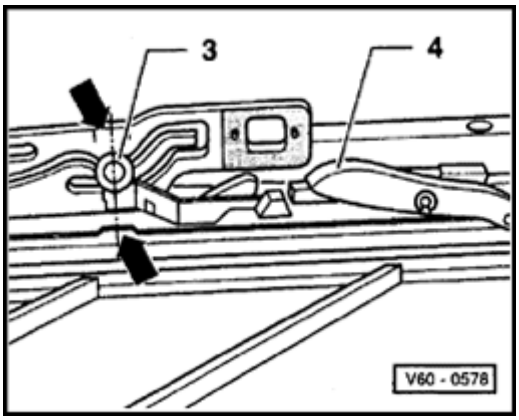

Pins -3- must line up with notches (arrow).

Locating hooks -4- must be locked in guide rails.

If not, adjust parallel alignment ⇒ Page 60-31

- Place sliding/tilting roof from above and install mounting screws for frame/panel.
- Slightly tighten screws (Torx T 25).

Notes:

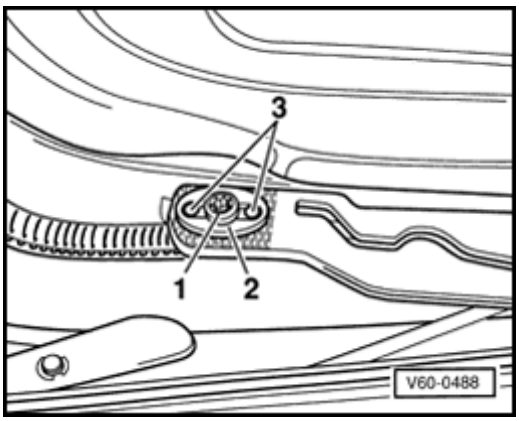

- *When tightening Torx screws -1- be sure that adjustment plate is properly located (adjustment plate is an integral part of guide channels) .*
- *Tighten screws after adjusting panel height to 6 Nm (53 in. lb).*

60-28

Sliding headliner, removing

Glass panel and trim frame removed and sliding/tilting roof in "closed position".

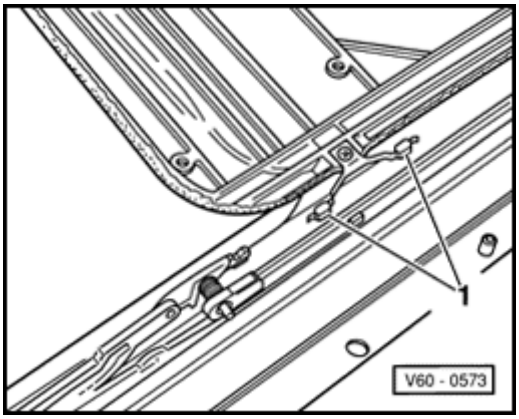

- Remove glider -1- from from sliding headliner (only one side) and pull out of frame assembly guide channels.

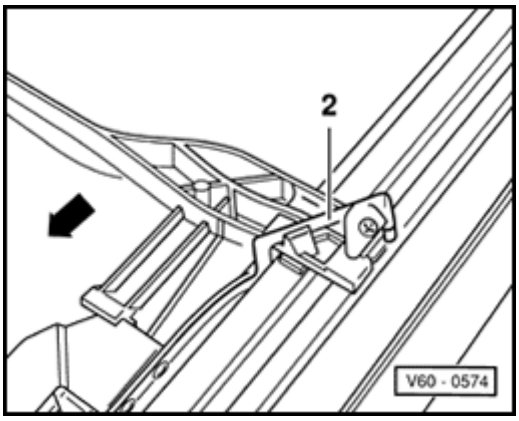

- Release spring -2- and pull sliding headliner toward front out of roof opening.(When pulling out , sliding headliner must be tilted). Spring -2- is not visible when installed.

60-29

Sliding headliner, installing

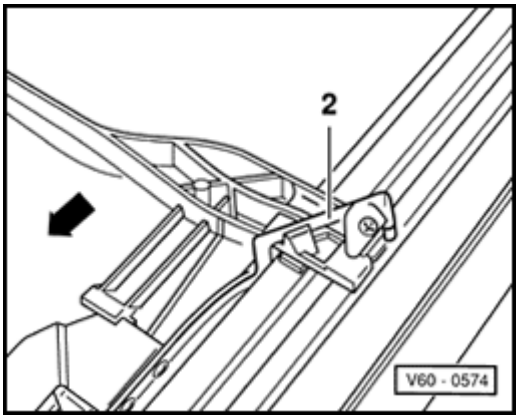

- Install springs -2- to sliding headliner. Always use new screws (screws are coated).
- Insert sliding headliner into roof cutout. Fasten slide in guide channel (slide is screwed onto sliding headliner. Insert slider for other side and fasten to sliding headliner.
- Move sliding headliner to rear until springs -2- engage.

60-30

Parallel alignment, checking

Glass panel must be closed.

- Push sliding headliner fully back.

- Push trim frame to rear (clipped on in area of front guide and guided in rear by pins).

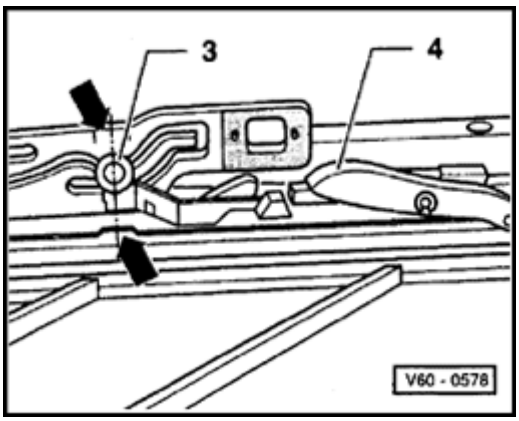

Pins -3- must be positioned within notches (arrows). Hooks -4- must be engaged in guide rails. If pins -3- are not positioned within notches, parallel alignment must be adjusted ⇒ Page 60-31 .

60-31

Parallel alignment, adjusting

Glass panel must be closed.

- Disconnect battery ground cable.
- Fully push back sliding headliner and trim frame.
- Remove cover for cable drive.
- Remove cable drive assembly. Always use new screws (coated) when installing cable drive 3 Nm (27 in. lb).

Note:

The drive pinion must no longer be engaged in the drive cables.

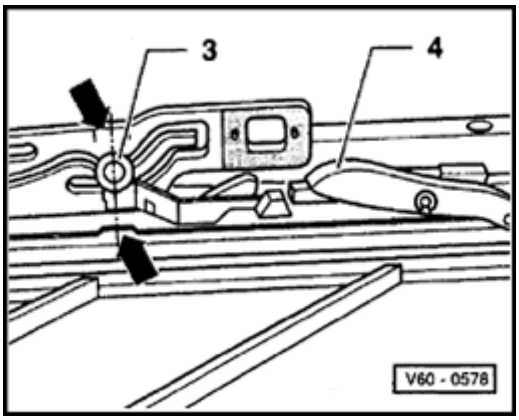

- Push rear guides only from the rear onto notches (arrows).

Pins -3- must be positioned within notches (arrows).
Hooks -4- must be engaged in guide rails.

60-32

Glass panel for sliding/tilting roof, adjusting height

Parallel alignment must be OK.

- Tilt glass panel up.
- Push sliding headliner fully back.
- Release trim frame and push to rear.
- Move glass panel to 0-position.
- Loosen all four screws on glass panel (floating alignment in roof opening).
- Adjust height from front to rear according to illustration to avoid wind noise.

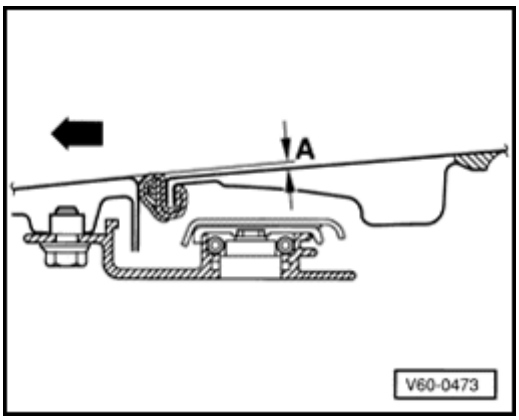

Glass panel adjustment, front:

a = 1 mm lower than roof

Arrow = driving direction

60-33

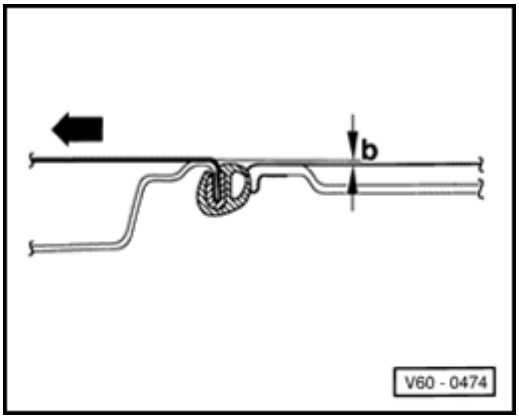

Glass panel adjustment, rear:

b = 1 mm higher than roof

Arrow = driving direction

- Tighten screws for glass panel to 6 Nm (53 in. lb).
- Push trim frame forward and clip in (clipped-in in front frame and guided in rear by pins).

60-34

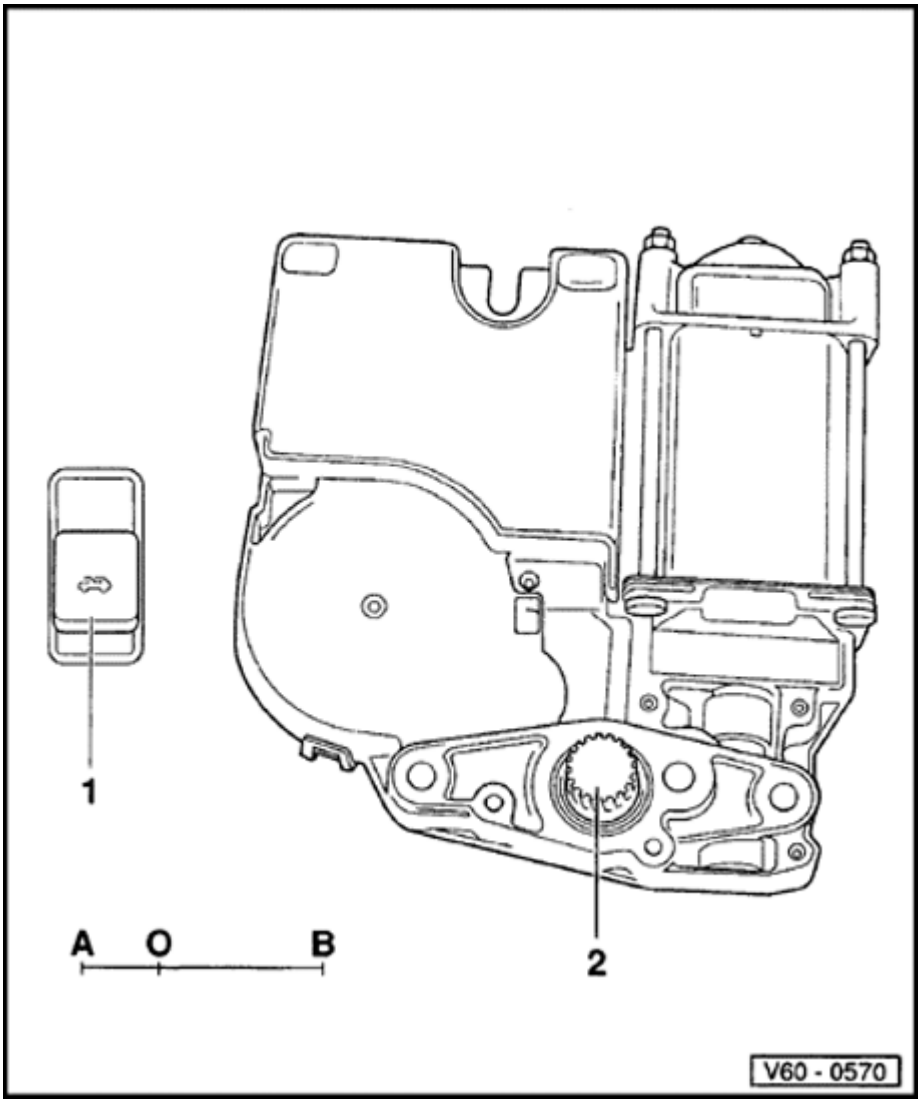

Cable drive, checking 0-position

If you replace the cable drive, it must be installed in the "0-position" (glass panel closed).

- Connect cable drive wiring harness connector to sliding/tilting roof harness connector.
- Operate switch -1- and count revolutions of drive pinion -2-: "0-position" of cable drive is between end switch-off points -A- and -B-.
- End switch-off point -B- is obtained by turning drive pinion clockwise and end switch-off point -A- by turning counter-clockwise.

-A- End switch-off point for tilt function = 2 revolutions to 0-position.

-B- End switch-off point for tilt function = 8.25 revolutions to 0-position.

60-35

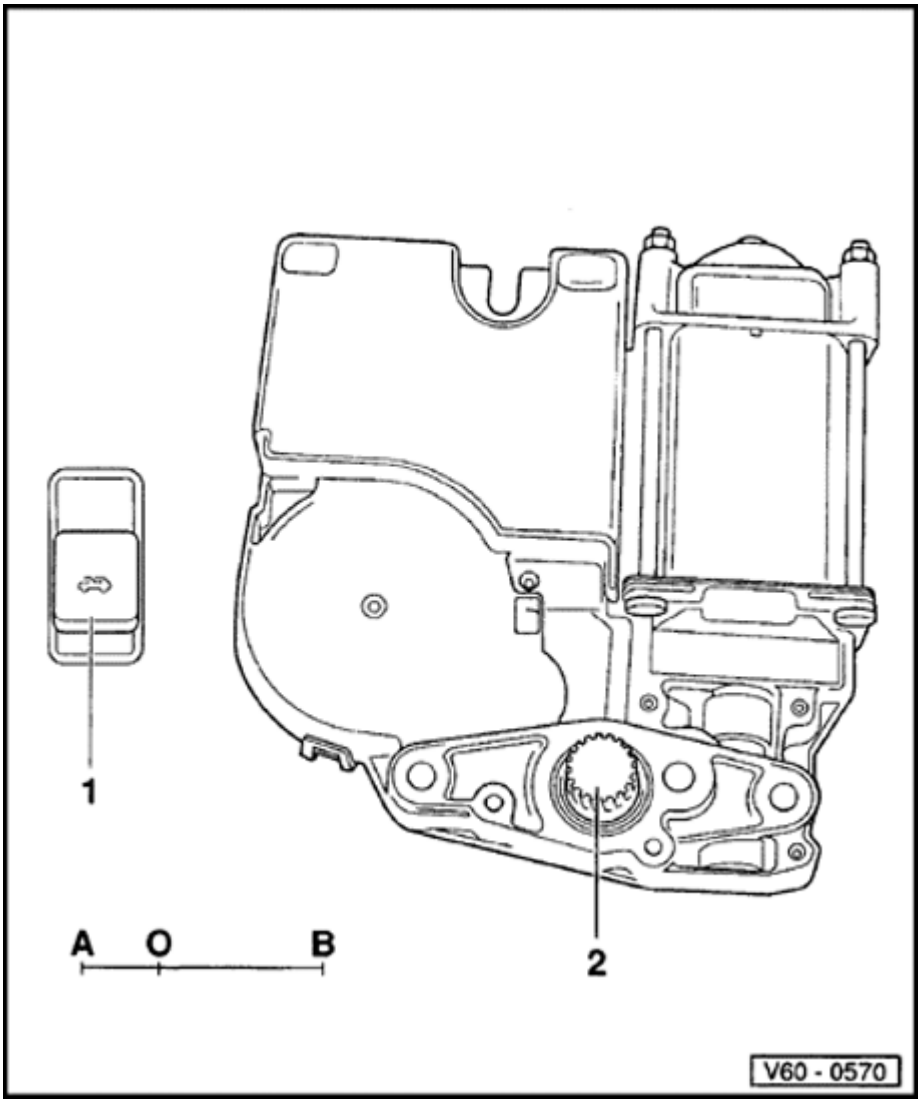

Sliding/tilting roof - assembly

- Removing ⇒ Page 60-16

Water drain hoses

- Cleaning ⇒ Page 60-16

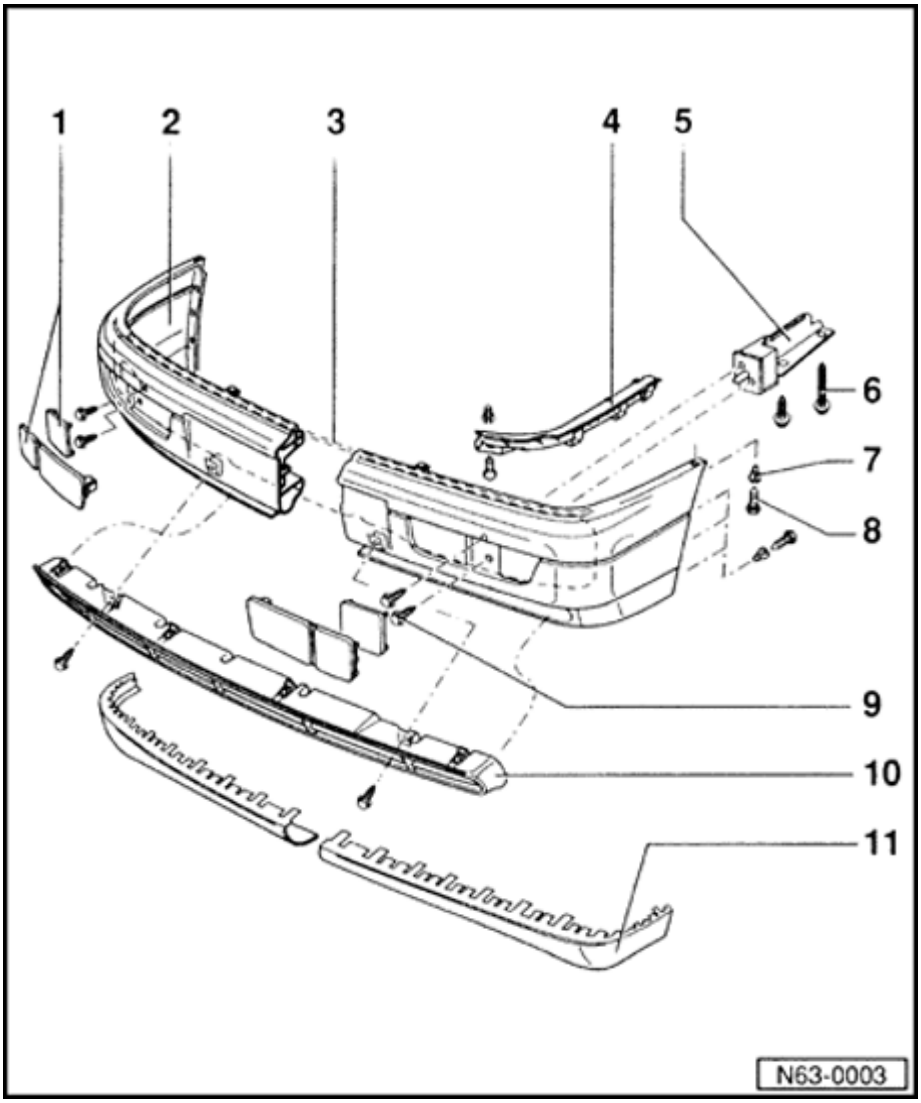

Bumpers

Front bumper, removing and installing

CAUTION!

Do not drive vehicle without bumper or bumper brackets because subframe will no longer be properly secured.

1 - Trim cover

2 - Cover

- Removing bumper from long member ⇒ Page 63-4

3 - Carrier

4 - Guide

- To remove or install bumper, pull out or push in bumper parallel to guides at left and right.

63-2

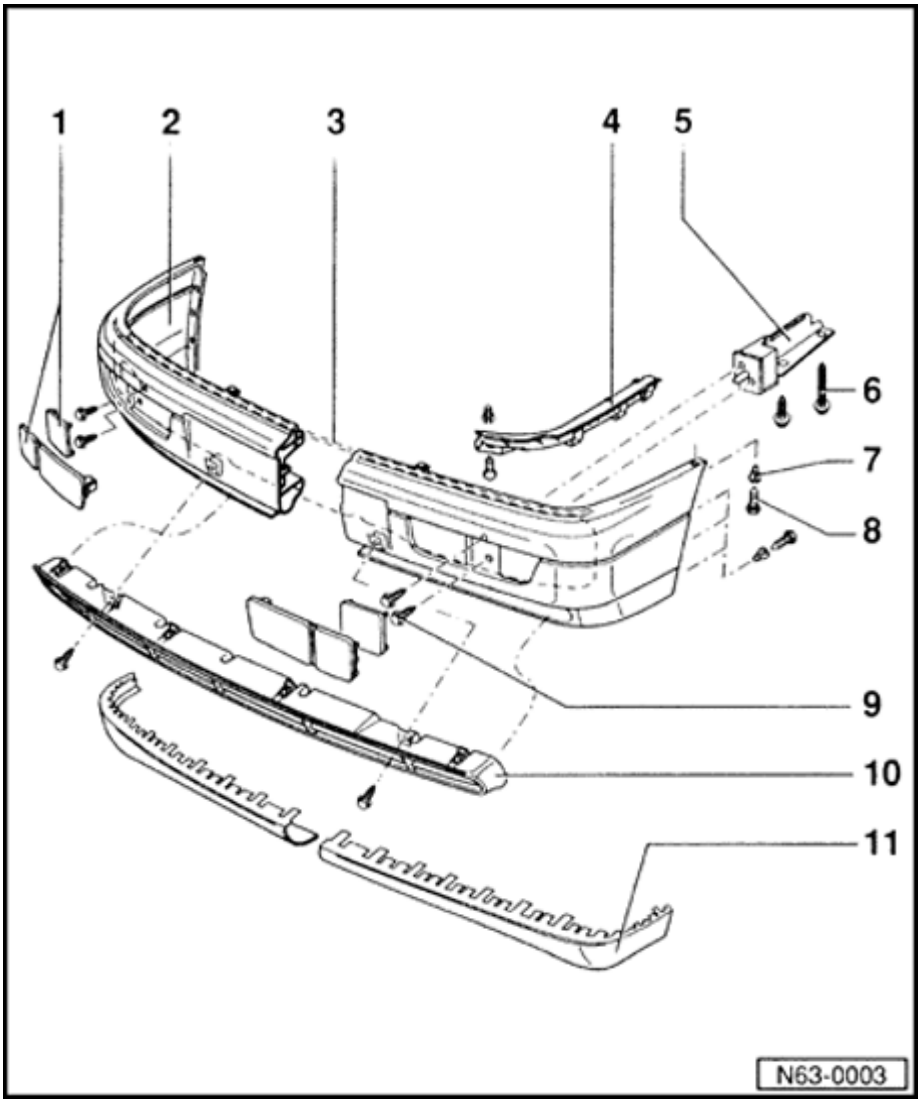

5 - Bracket

6 - Bolts

- 82 Nm (60 ft lb)

7 - Spreader clip

8 - Bolt and washer assembly

- Connects cover to wheel housing liner.
- Qty. 4 each side.

9 - Bolts

- 23 Nm (17 ft lb)

10 - Air intake grille

- Removing ⇒ Page 63-3

11 - Spoiler

- Clipped into cover.

63-3

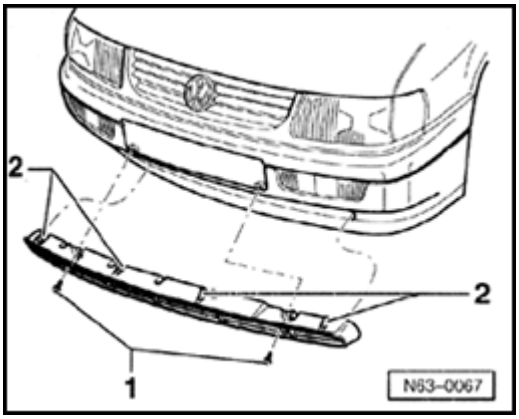

Air intake grille, removing

- Remove screws -1- (qty. 2).
- Press down detent lugs -2- with screwdriver.
- Tilt air intake grille toward the front and out.

63-4

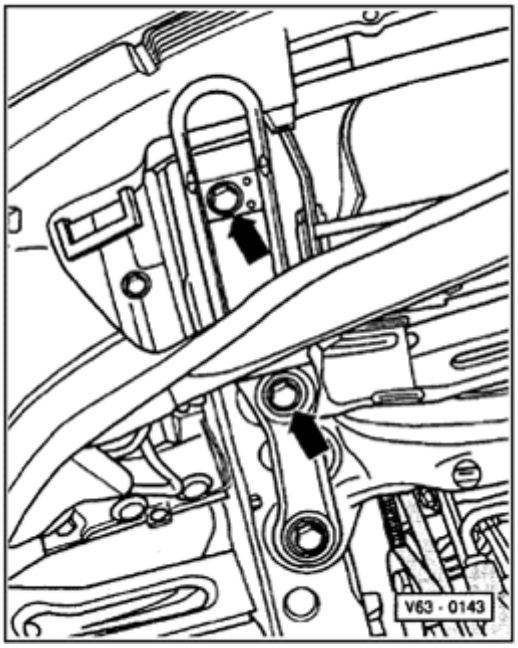

Front bumper, removing from side member

- Remove bolts on left and right.

Vehicles with fog lights:

- Disconnect electrical connector from back side of fog lights.

Vehicles with headlight washer system:

- Pull bumper slightly forward and disconnect hose from connector between bumper and cross panel.

63-5

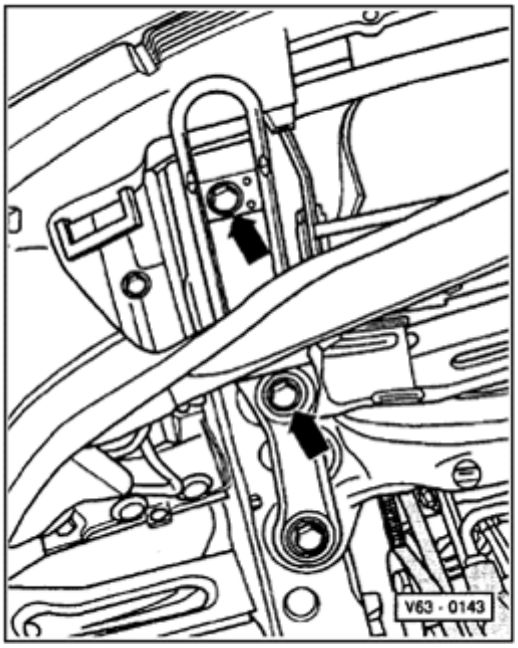

Continuation for all vehicles:

- Remove bolts (arrows) 82 Nm (60 ft lb).
- Pull out bumper toward front parallel from guides on sides.

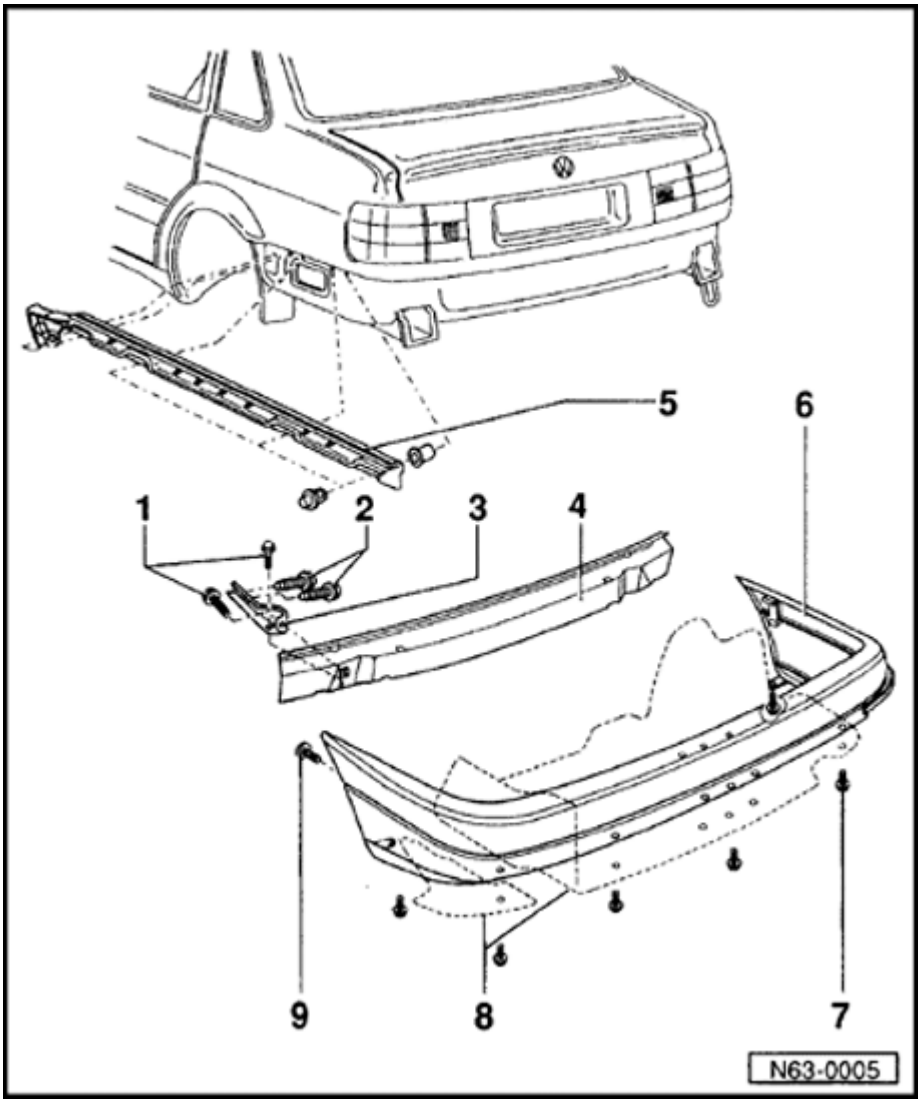

Rear bumper, removing and installing

Removing:

- Remove bolts -2-, accessible from luggage compartment.
- Remove bolts - 7 - (qty. 5), accessible from under vehicle.

1 - Bolt

- 23 Nm 17 ft lb)

2 - Bolts

- Accessible from luggage compartment
- 82 Nm (60 ft lb)
- Wrench size: 16 mm

3 - Bracket

4 - Carrier

63-7

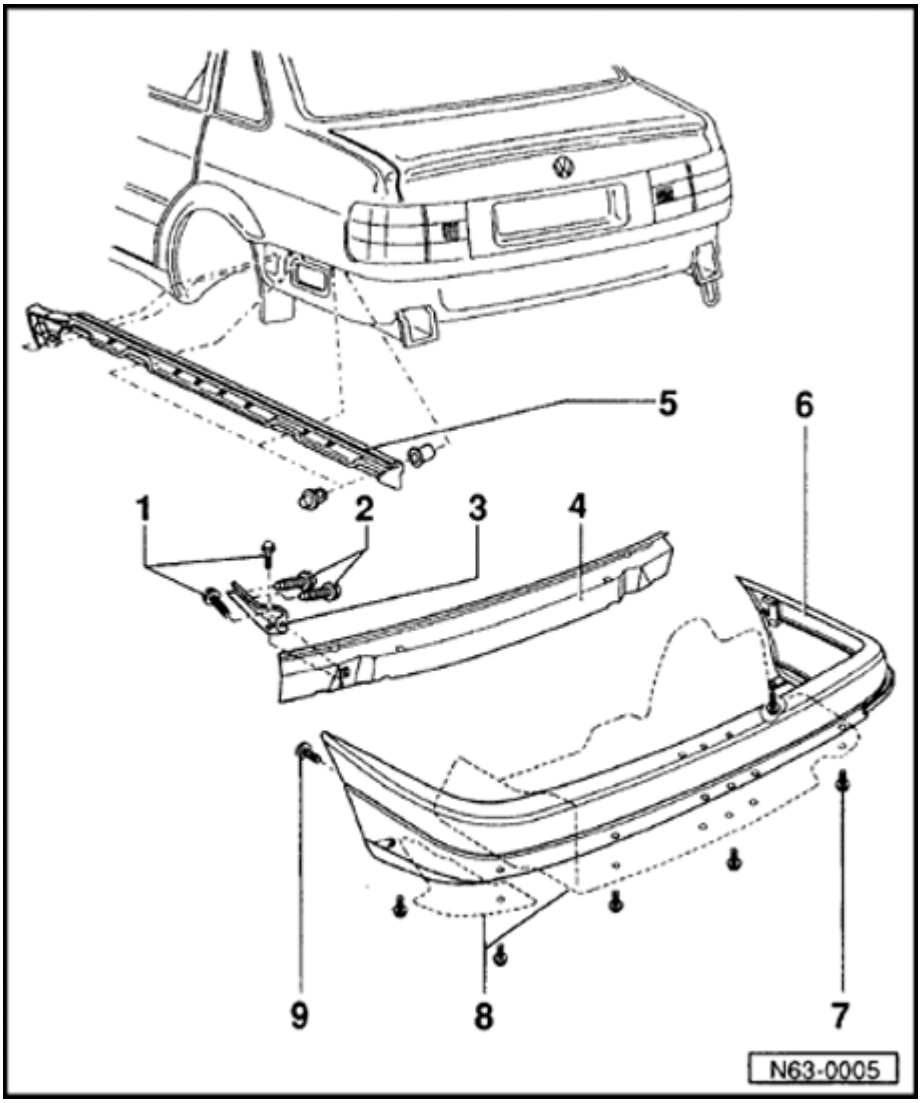

5 - Guide

- To remove or install bumper, pull out or push in bumper parallel to guides at left and right.

6 - Cover

7 - Self-tapping screw

8 - Under-body cover

- Secured with self-tapping screws - 7 -.

9 - Torx bolt T 20

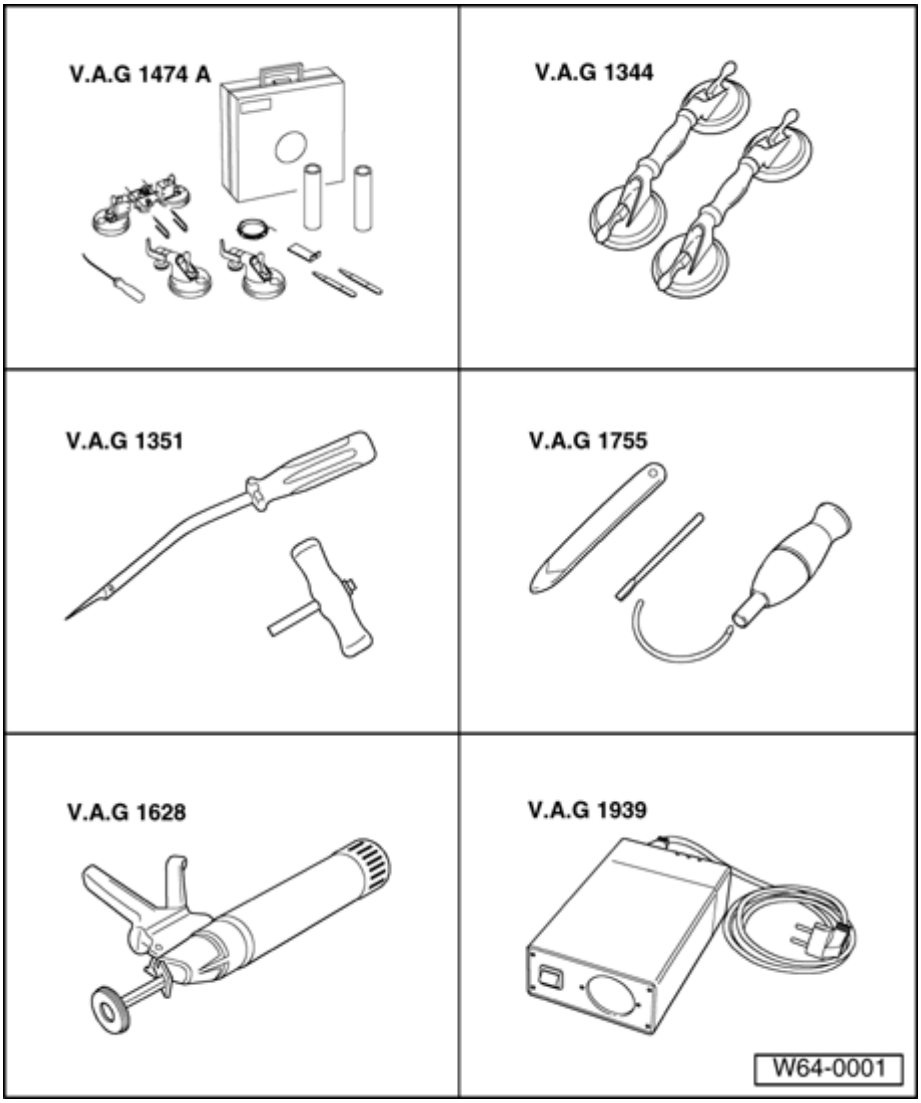

Flush-bonded windows

Special tools

- VAG1474 A Cutting device for bonded windows
- VAG1344 Double suction cups
- VAG1351 Cutting tool
- VAG1755 Window removal set
- VAG1628 Hand gun
- VAG1939 Cartridge heater

64-2

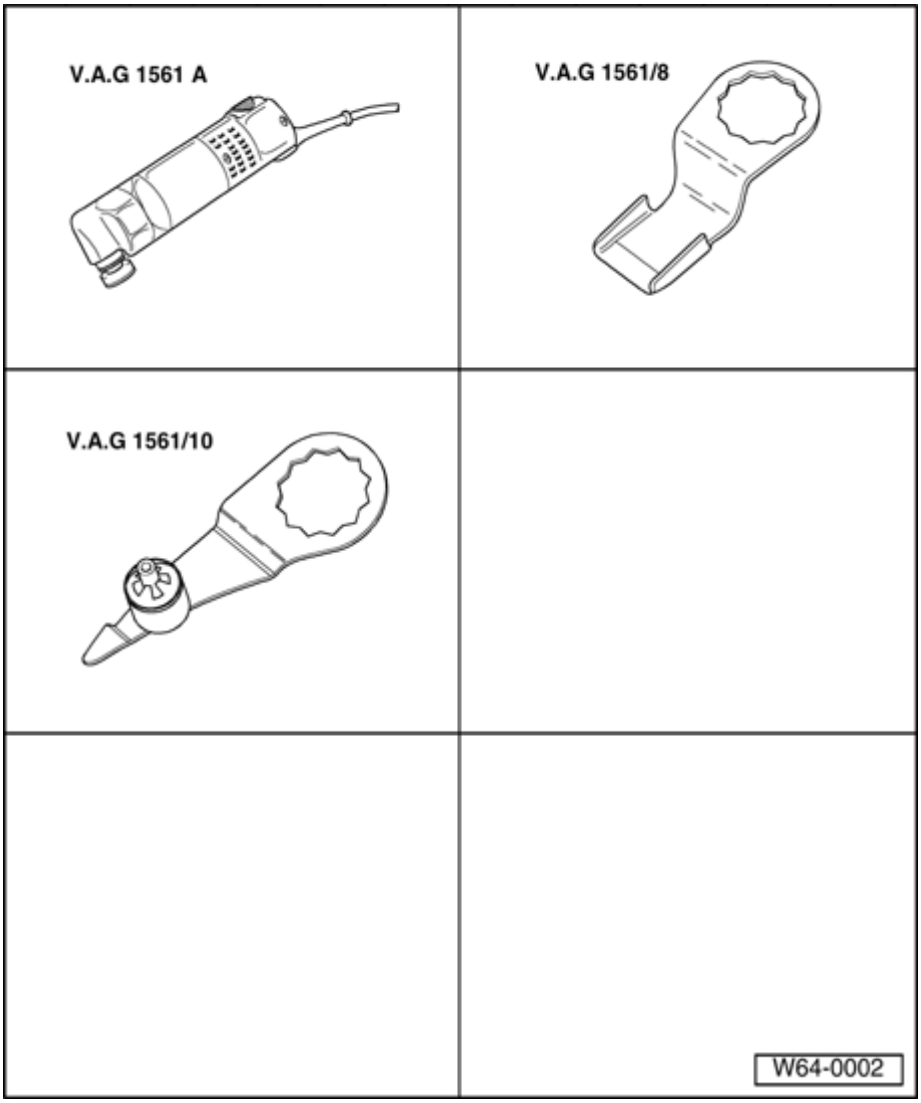

- VAG1561 A Electric cutter
- VAG1561/2 Cutting knife
- VAG1561/3 Cutting knife
- VAG1561/8 Cutting knife
- VAG1561/10 Cutting knife
- VAS5237 Caulking gun

64-3

Only pre-coated windows are supplied for repair work.

Pre-coated windows: Pre-coating means that the PUR adhesive must be applied to window and window surround.

Before applying 2K-adhesive, the pre-coating must be treated with activator D 181 801 A1. The pre-coated window does not need to be primed.

CAUTION!

Do not get activator on painted body parts otherwise the paint will be damaged.

Materials

♦ 2K- window adhesive	DA 004 600 A2 [2), 3)]
♦ 1K- window adhesive	DH 009 100 03 [4), 5)]
♦ Activator	D 181 801 A1 [1)]
♦ Glass primer/paint primer	D 009 200 02 [1)]
♦ Cleaning solution	D 009 401 04 [1)]
♦ Primer applicator	D 009 500 25 [1)]
♦ Adhesive remover	D 002 000 10 [1)]
♦ Cutting cord	357 853 999
♦ Cutting wire	357 845 955

1) Materials come in box D 004 700

2) Note curing time ⇒ Page 64-26

3) Use caulking gun VAS5237 to apply.

4) Heat according to maunufacturer s specifications using cartridge heater VAG1939.

5) Small cartridge 110 ml for sealing or when 400 ml cartridge is not enough.

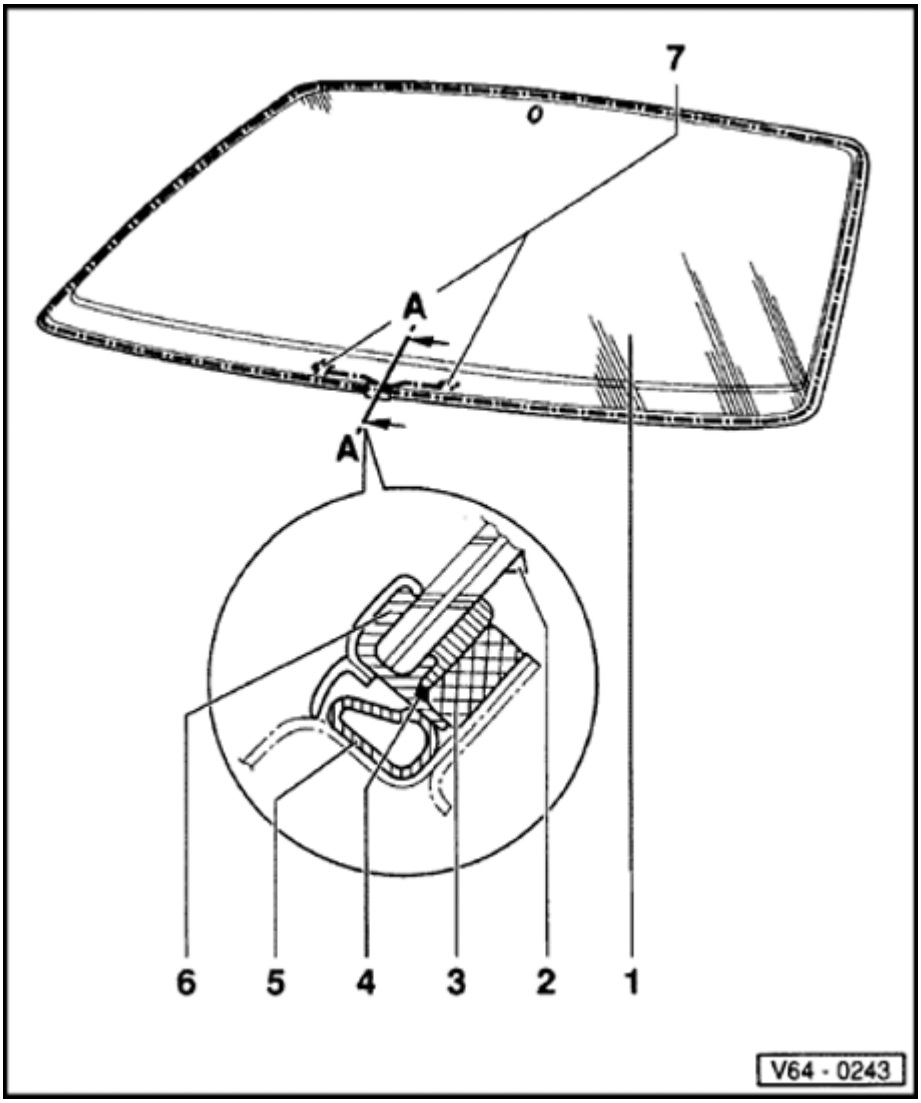

Windshield, removing and installing

1 - Windshield

- Windshield, removing ⇒ Page 64-7
- Windshield, installing ⇒ Page 64-9

2 - Seal

- Self-adhesive
- Bonding ⇒ Page 64-9

3 - PUR-adhesive sealant

- Cross section of bead: Width = 7 mm; height = 11 mm (including pre-coating and remaining material on window and window flange).

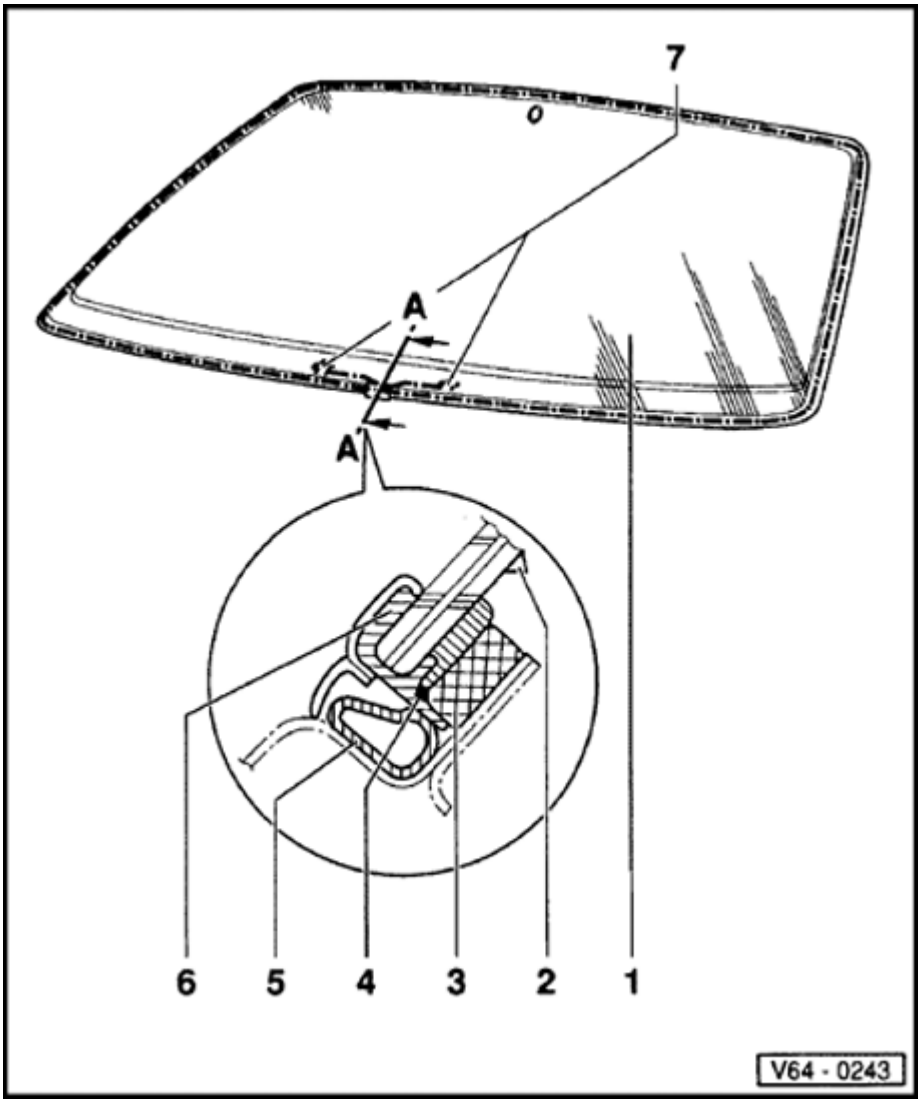

4 - Cutting thread

- Insert all around in surround.

5 - Tube section

6 - Surround (single piece)

- Replacing ⇒ Page 64-11

7 - Thread end

- 200to 250 mm long

Windshield, removing

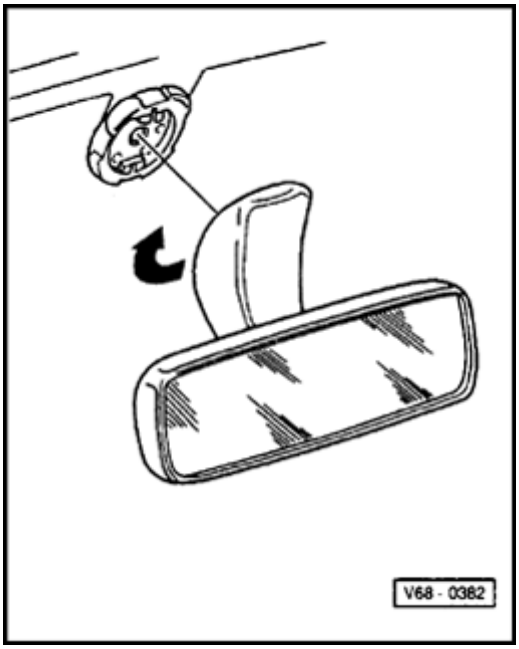

- Remove trim panels on A-pillar ⇒ Page 70-34 .
- Turn interior rear view mirror with mirror base 15° - 20° away from installation position.
- Remove sunvisor -2- .

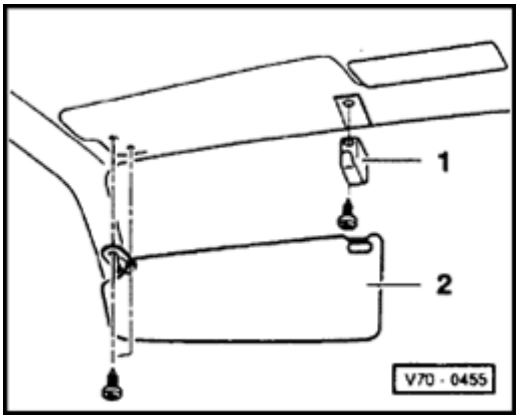

For illuminated mirror also disconnect electrical connector in roof frame.

- Remove mounting -1-, turn 90° and pull out of roof frame.

If sliding/tilting roof is installed, also remove cover for cable drive.

- Lower headliner at front.

64-8

- Remove sealing strips at bottom center of windshield.

- Free thread ends.

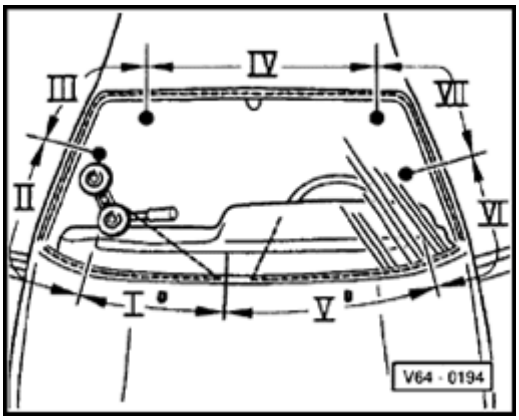

- Place winding device VAG1654 in position 1 , aim for an acute cutting angle.
- Cut evenly until at level with winding device.

Ensure sufficient clearance between cutting thread and instrument panel.

- Move winding device according to individual positions.

Notes:

- *Ensure sufficient clearance for the cutting thread in the area of the roof/molded headliner. If the windshield cannot be removed from the opening (adhesive has spread to the outside beyond the thread channel) it is advisable to cut through the remaining bonding with a piece of cutting thread using two pull toggles in order to prevent damage to the paintwork.*
- *Always guide the cutting thread below the window surround. Cut off the tube section carefully from the window surround with a knife.*

Windshield, installing

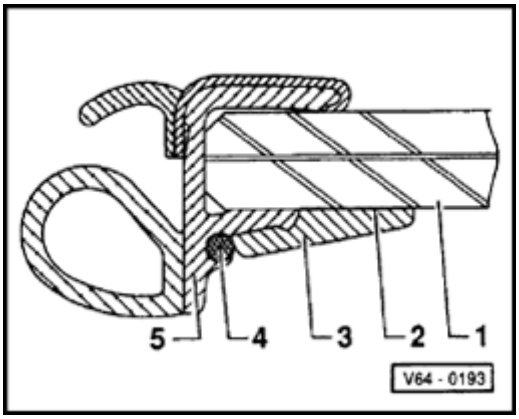

The replacement windshield comes with the following:

1 - Windshield

2 - Ceramic coating

3 - PUR primer

4 - Cutting thread

5 - Surround

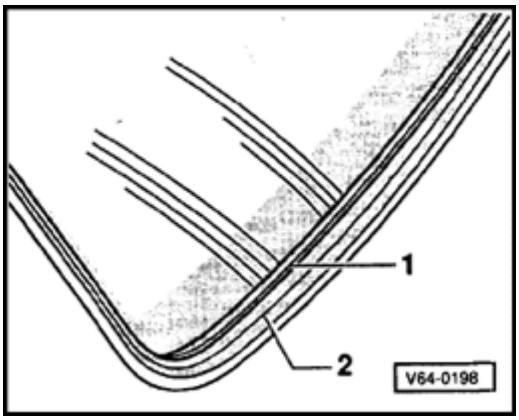

- Bond sealing section -1- to limit line - ceramic coating / screen print -2-. Spare ends must terminate at side before pre-coating.

64-10

Preparing old undamaged window for glazing ⇒ Page 64-22 .

Preparing new window for glazing ⇒ Page 64-23 .

Preparing body flange for glazing ⇒ Page 64-24 .

Curing time ⇒ Page 64-26 .

Installation note ⇒ Page 64-25 .

- Press in window until surround is flush with roof and A-pillars.

- Secure with adhesive tape during curing.

Window surround, replacing

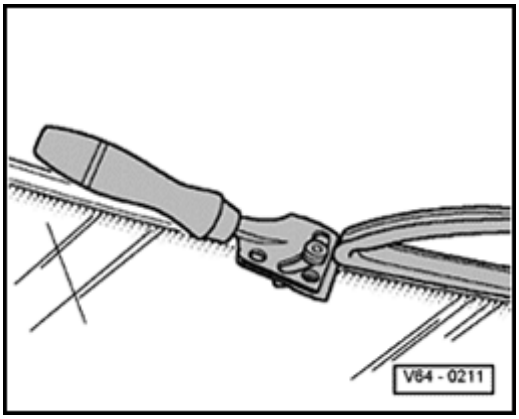

When re-using an undamaged window, pull off the surround beginning in the sleeve area. Scrape off remaining material with a commercially available glass scraper down to a few tenths of a millimeter. Do not damage primer and ceramic layer when performing this step.

- Replace window surround and install new cutting thread.

Note:

The remaining material acts as the adhesive base for the new adhesive sealant which has to be applied.

CAUTION!

Do not prime adhesive surfaces, do not activate and do not treat with cleaning solution. eep adhesive surfaces clean from dirt and grease.

Exception: If adhesion is not done immediately after cutting back, the residual adhesive must be activated with activator D 181 801 A1.

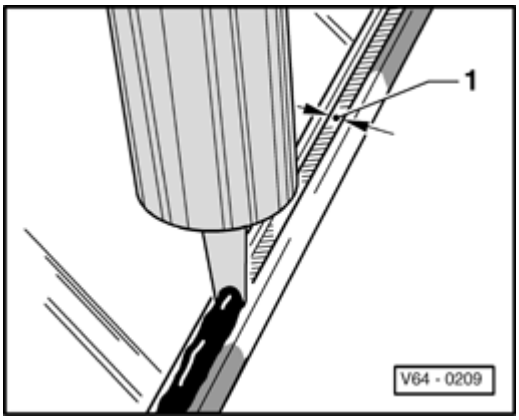

- Apply adhesive all around to pre-coating and window surround.

- Width = 6 - 7 mm
- Height = 11 - 13 mm (including pre-coating, remaining material on window and window flange).

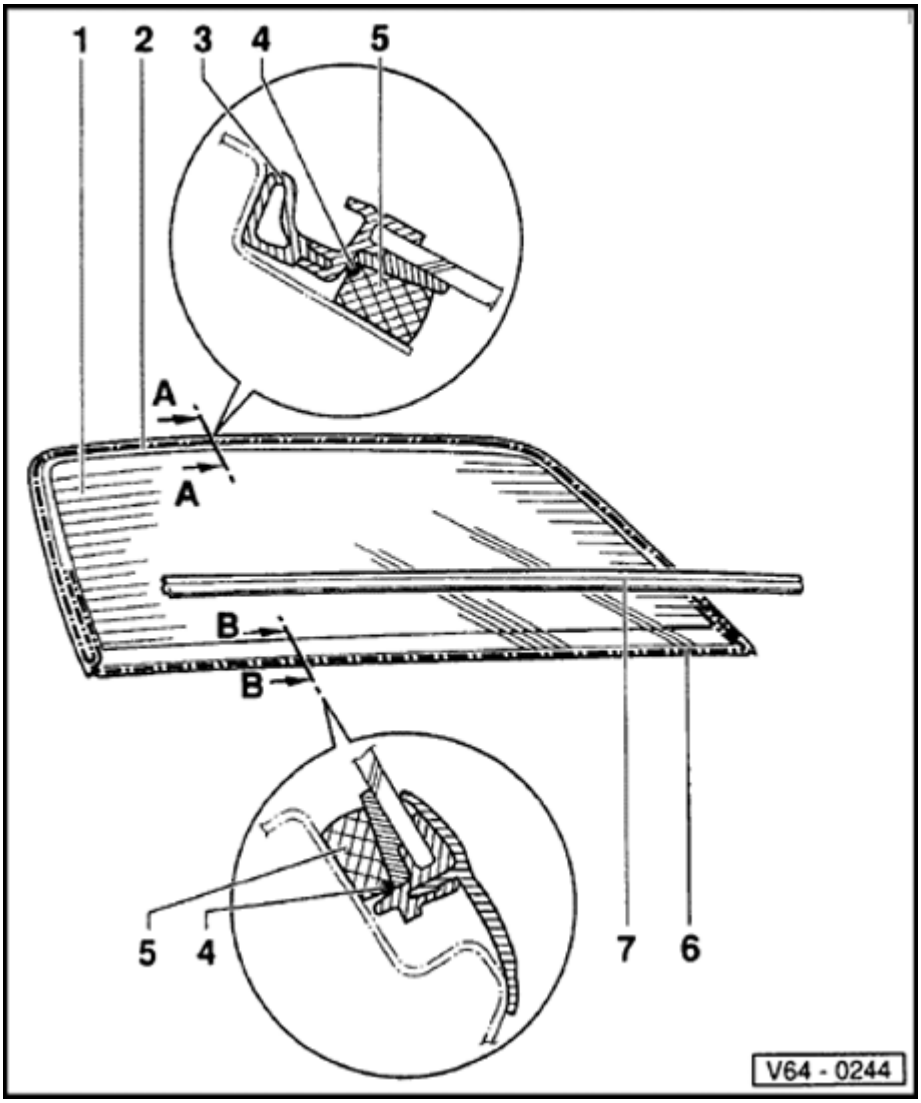

Rear Window, removing and installing (Sedan)

1 - Rear window

- Rear window, removing ⇒ Page 64-15
- Rear window, installing ⇒ Page 64-16

2 - Frame (side and top)

- Replacing ⇒ Page 64-11
- Inserted cutting thread separates area of roof and D-pillars.
- Thread ends, colored black.
- Thread ends are positioned parallel to adhesive bead of D-pillars or behind parcel shelf.

3 - Tube section (side and top only)

- After curing, peel off protective paper and press down.

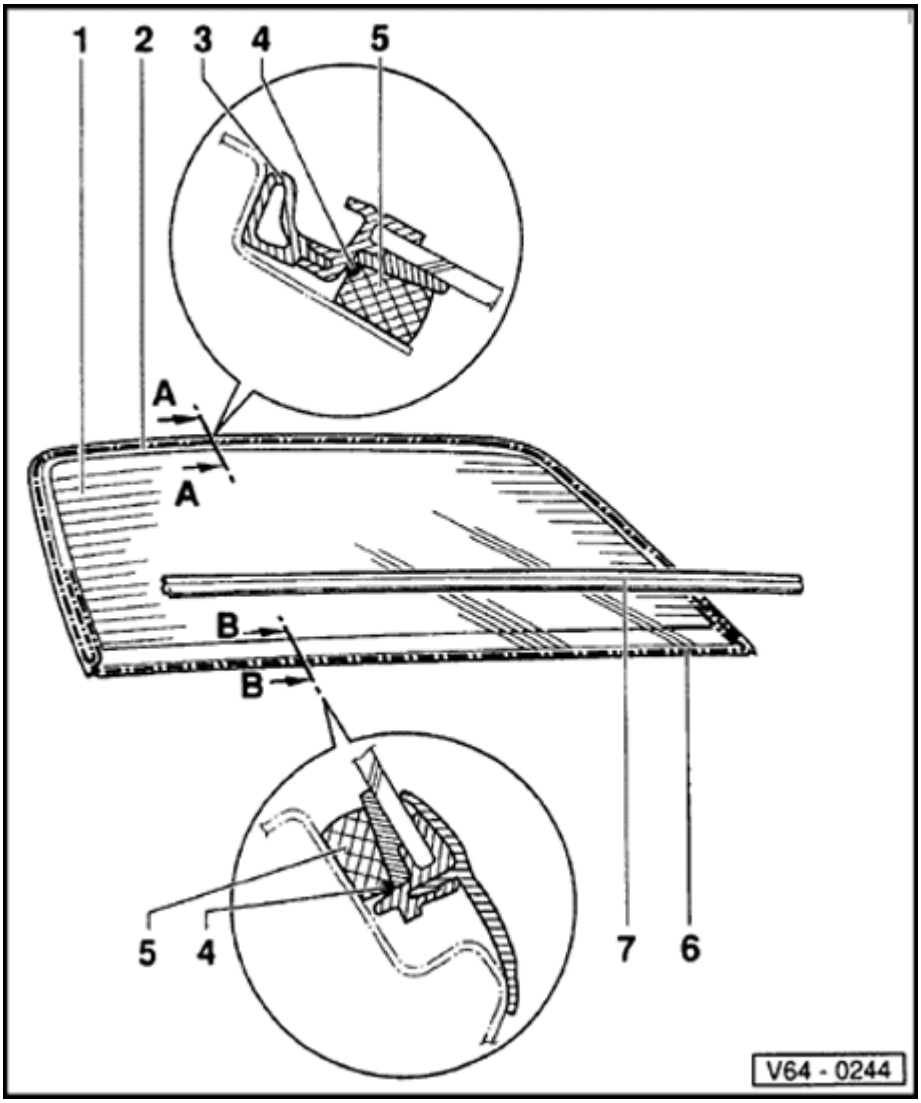

4 - Cutting thread

5 - PUR-adhesive sealant

Cross section of bead:

- Width = 7 mm
- Height = 12 mm (including pre-coating, residual material on window and window flange).

6 - Lower surround

- Inserted cutting thread separates lower area.
- Ends of threads are colored yellow.
- Ends of thread are positioned parallel to adhesive bead at D-pillar or behind parcel shelf.
- Replacing ⇒ Page 64-11

7 - Trim strip

- Replace after removing.
- Install trim plate only after a newly installed window has cured.

Broken rear window, removing

- Remove trim from D-pillars, parcel shelf and finishing strip (headliner/rear window) ⇒ beginning at ⇒ Page 70-46 .

Note:

Removing the parcel shelf is only necessary to clean-up broken glass.

- Protect body and interior from glass splinters.

- Remove glass pieces down to adhesive sealant material.

- Remove connectors for heated rear window and antenna.

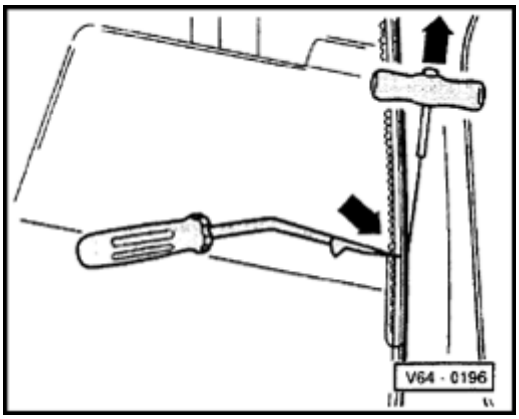

- Cut out remaining glass with cutting tool VAG1351 or electric cutter VAG1561 with blade VAG1561/1.

CAUTION!

Mask off the rear window opening when working with a cutting tool or electric cutter. Wear protective goggles and leather gloves.

Undamaged window, removing

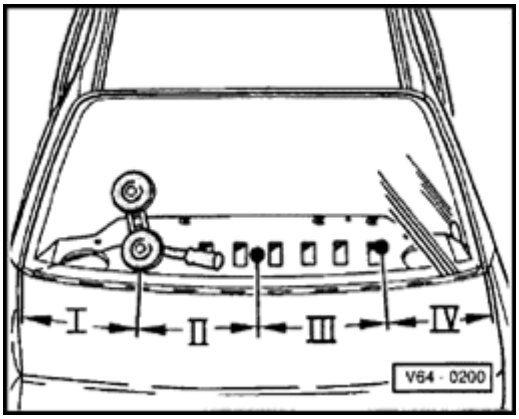

- Place winding device VAG1654 in position 1.
- Attach ends of thread (yellow) to winding device.
- Move winding device to various positions and cut out window up to position 3.
- Cut position 4 with other thread end.

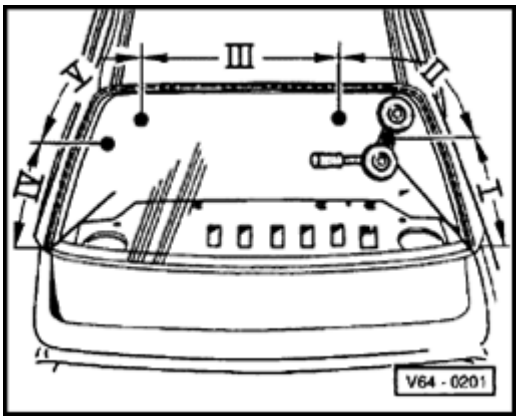

- Cut through remaining adhesive, positions 1 - 3.
- Cut away positions 4 and 5 with other free end of thread.

Note:

- *If you cannot remove the rear window from the opening (adhesive has spread to the outside beyond the thread channel) it is best to cut through the remaining adhesive with a piece of cutting thread using two toggles to prevent damage to the paint.*
- *Always guide cutting thread below the window surround.*

Rear window, installing

Preparing undamaged window for glazing ⇒ Page 64-22

Preparing new window for glazing ⇒ Page 64-23

Preparing body flange for glazing ⇒ Page 64-24

Curing time ⇒ Page 64-26

- Press in window until window surround is flush with roof on top.

- During curing time, protect window with adhesive tape.

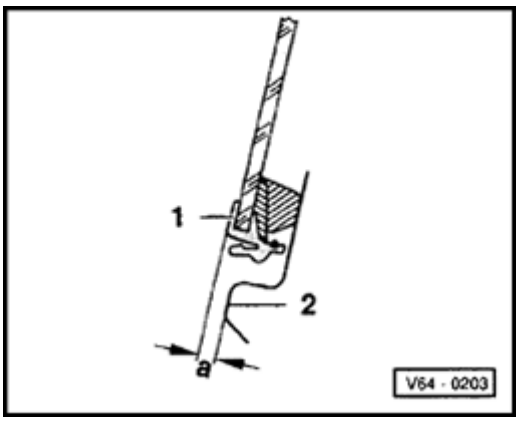

- At bottom, window must be at a = 1-2 mm over body sheet metal.

1 - Surround for cover strip

2 - Body panel

Undamaged rear window, removing (Wagon)

- Remove rear wiper arm. nut M8 = 15 Nm (11 ft lb)

- Loosen sealing lip from window flange all around using plastic wedge. Spray with cleaning solution D 009 401 04 for lubrication.

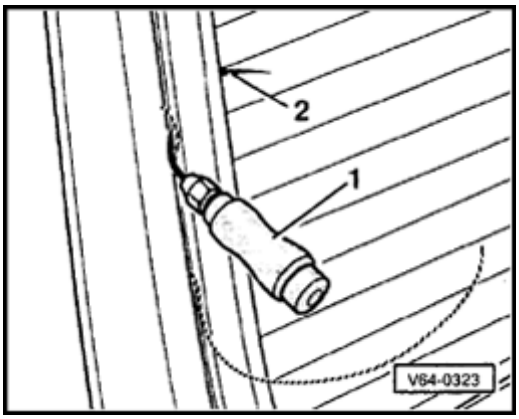

- With handle -1- , guide trimming needle -2- under sealing lip on side of window and puncture through adhesive bead.

Do not get too close to the window, otherwise you may damage the heating element.

- Remove handle and pass cutting thread through eye of needle.
- Pull cutting thread through toward inside (use pliers and gloves).

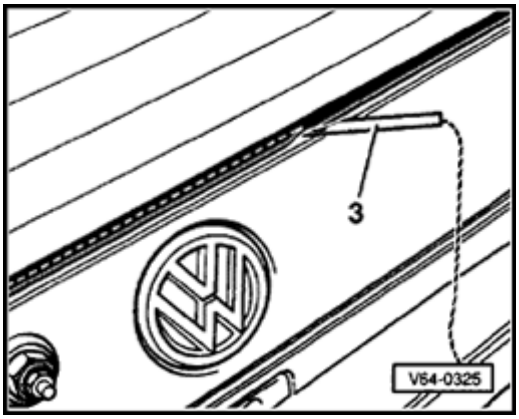

- Guide cutting thread between sealing lip and window flange using tube -3- (if thread breaks, use cutting wire).

- If gap is too small, guide cutting thread from outside and push under lip with a plastic wedge.

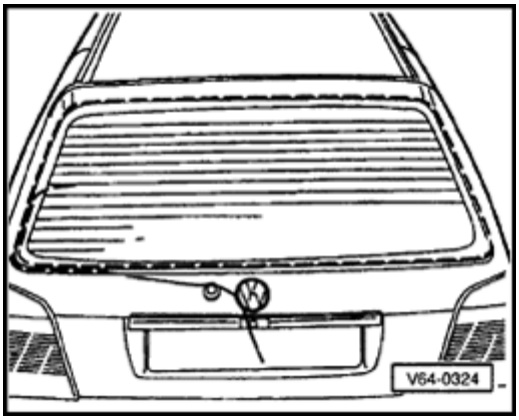

- Place cutting thread around window as shown.

Note:

Press in cutting thread deep enough to avoid damaging sealing lip or spacer lip.

- Secure outer end of thread on window wiper shaft or pull thread through toward inside and counter-hold with handle VAG1351/1.
- Disconnect heated rear window and press connecting tabs onto window.

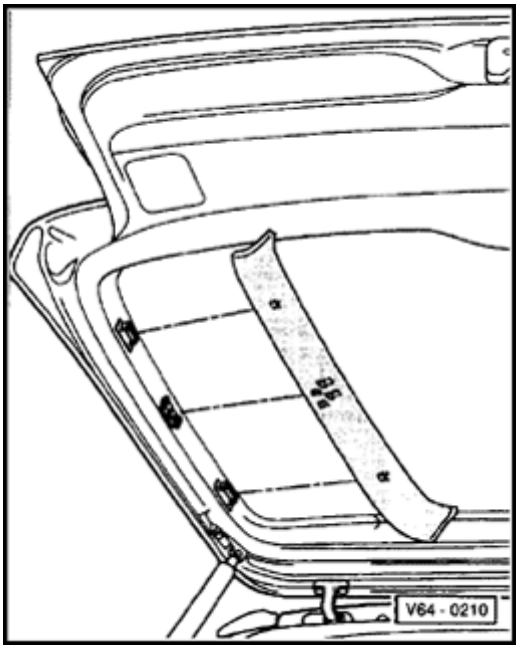

GL and GT only

- Unclip trim panels on left and right parallel to rear window.

64-19

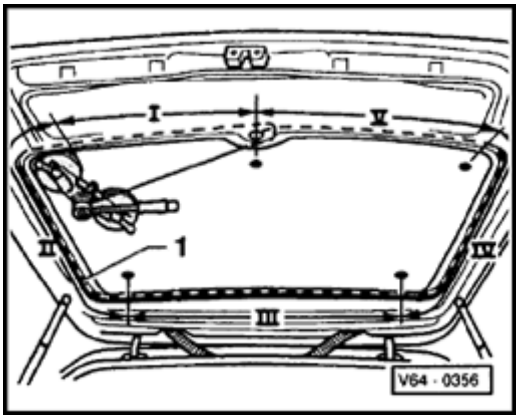

- Cover inside window flange -3- with textile reinforced tape when you use cutting wire.
- Secure inner end of thread on winding device.
- Place winding device VAG1654 in position 1.
- Move winding device according to position required and cut out window glass.
- Press cutting thread against window glass with plastic wedge during cutting to provide clearance at window flange.

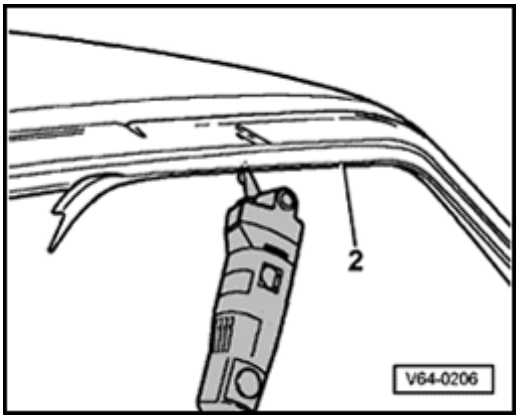

Broken rear window, removing

- Protect body and vehicle interior against glass splinters.
- Remove glass fragments down to adhesive sealant.
- Disconnect window heater and antenna.
- Cover flange -2- all around with textile reinforced adhesive tape.
- Cut through adhesive with glass remnants using electric cutter with blade VAG1561/10 with stop roller.

CAUTION!

Always wear protective goggles and leather gloves.

64-21

Rear window, installing

Preparing old undamaged window for glazing ⇒ Page 64-22

Preparing new window for glazing ⇒ Page 64-23

Preparing body flange for glazing ⇒ Page 64-24

Curing time ⇒ Page 64-26

Installation notes ⇒ Page 64-25

Undamaged rear window, preparing for installation

Note:

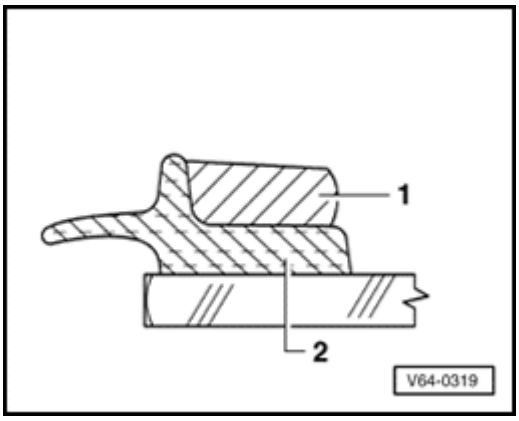

- When re-using an undamaged window, cut back remaining adhesive sealer -1- shortly before re-use to 1 - 2 mm using electric cutter with blade VAG1561/10 and stop roller. Be careful not to damage pre-coating and lip with spacer rib -2-.

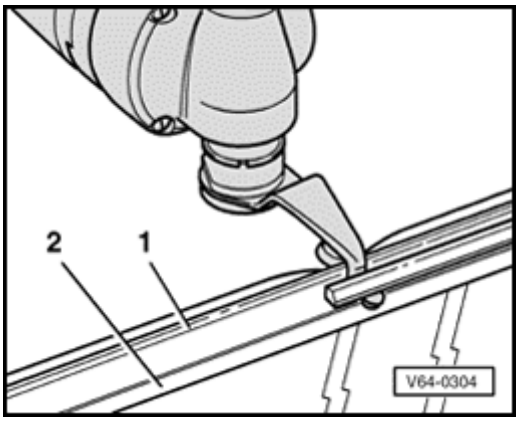

- Do not damage spacer rib -1- and ceramic coating -2- .

CAUTION!

Do not prime adhesive surfaces, do not activate and do not treat with cleaning solution. eep adhesive surfaces clean from dirt and grease.

Exception: If adhesion is not done immediately after cutting back, the residual adhesive must be activated with activator AMV 181 800 02.

New rear window, preparing for installation

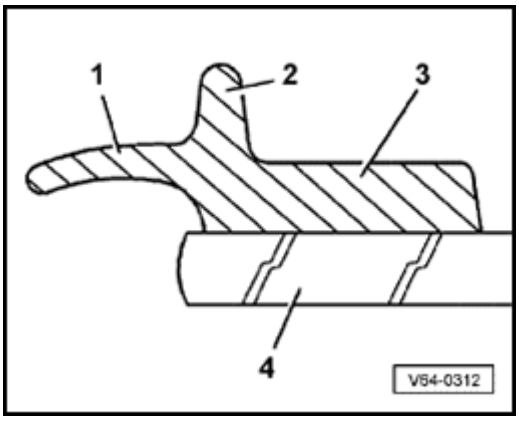

New windows are supplied already pre-coated with PUR. The pre-coating consists of items 1, 2 and 3.

1 - Sealing lip

2 - Spacer lip

3 - Area for applying adhesive bead

4 - Rear window

- Rub off pre-coating with lint-free rag.

CAUTION!

Do not use primer on pre-coating and no cleaning solution.

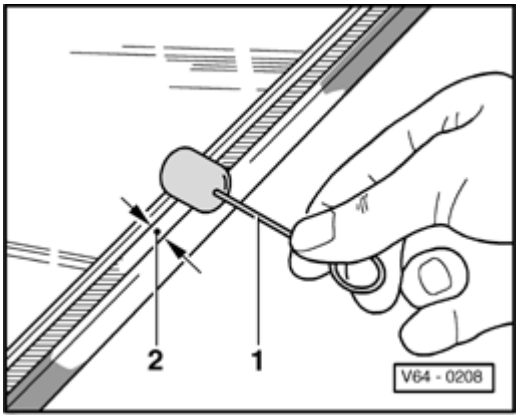

- Apply thin coat of activator AMV 181 800 02 with applicator -1- D 009 500 25 (felt ball with wire) only on pre-coating -2- of glass.
- Allow applicator to flash off for at least 10 minutes.

CAUTION!

Do not let activator get onto paint or it will be damaged.

Body flange, preparing for window installation

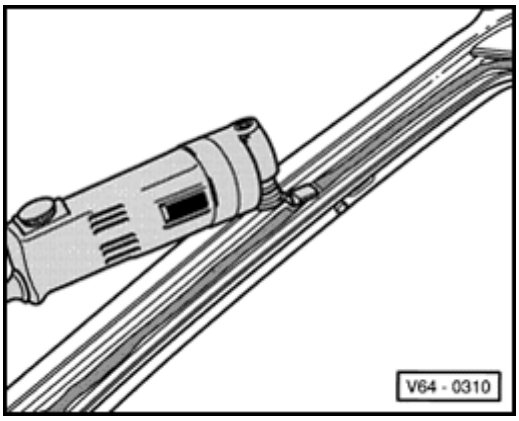

- Cut back remaining material on body flange with scraper blade VAG1561/8 but do not remove completely.

Note:

The remaining material acts as the adhesive base for the new adhesive sealant which has to be applied.
eep sealant free of dirt and grease.

CAUTION!

Do not prime adhesive surface, do not activate and do not apply cleaning solution. Always keep adhesive surfaces clean from dirt and grease.

Exception: If adhesion is not done immediately after cutting back, the residual adhesive must be activated with activator D 181 801 A1.

CAUTION!

Do not get activator on painted body parts otherwise the paint will be damaged.

If the body flange was repaired or partially replaced, clean the flange after painting and priming.

Rear window, installing

Note:

1 window adhesive sealant DH 009 100 03 must be heated for 20 minutes in cartridge heater VAG1939.

Installation hint:

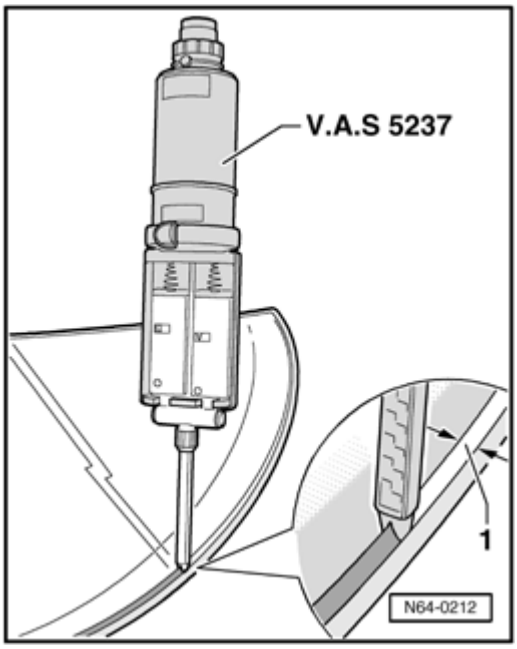

- Apply adhesive material all around to the pre-coating -1- at right angle to the rear window.

CAUTION!

Window must be inserted within 10 minutes, otherwise adhesion will be impaired.

- Insert window using two double suction cups (VAG1344) in window opening and align.

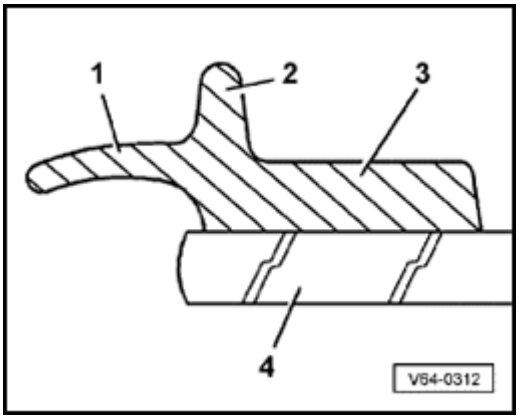

- Press window in as far as spacer lip -2-.
- Secure window with tape during curing.

♦ Existing labels (e.g. for airbag) can be attached.

Curing time

CAUTION!

Special requirements must be adhered to when replacing bonded windows. For example, after curing time, the integrity of newly bonded windows should comply with operation safety guidelines in case of an accident.

The new 2K adhesive DA 004 600 A2 allows for a shortened curing time.

Window type	Vehicle	Adhesive-sealant	Curing time
Windshield	with or without Airbag	DA 004 600 A2	3 hours
Rear window		DA 004 600 A2	3 hours

- Curing time: From bonding the window until driving the car. During the time of curing, the car must be stationary at room temperature (15° C) and standing on level ground.

CAUTION!

The vehicle is safe to drive only after the curing time.

Paint repair

The paint structure must be restored and, if necessary, corrosion protection must be applied.

For paint damage in non-visible areas the following method is suitable:

- Apply two coats (wet in wet) with glass/paint primer D 009 200 02 - flash-off time about 10 minutes.

Excess adhesive sealing material, cleaning

Use adhesive remover D 002 000 10. Be sure to heed all cautions and warnings when using this material.

CAUTION!

When cleaning the inside of a freshly inserted window, be careful not to push the window outward.

First, roughly clean painted surfaces with a dry rag. Clean remainder of paint surface with adhesive cleaner D 002 000 10.

Cleaning plastic trim: Allow adhesive/sealer to harden (about 1 hour) and then peel off.

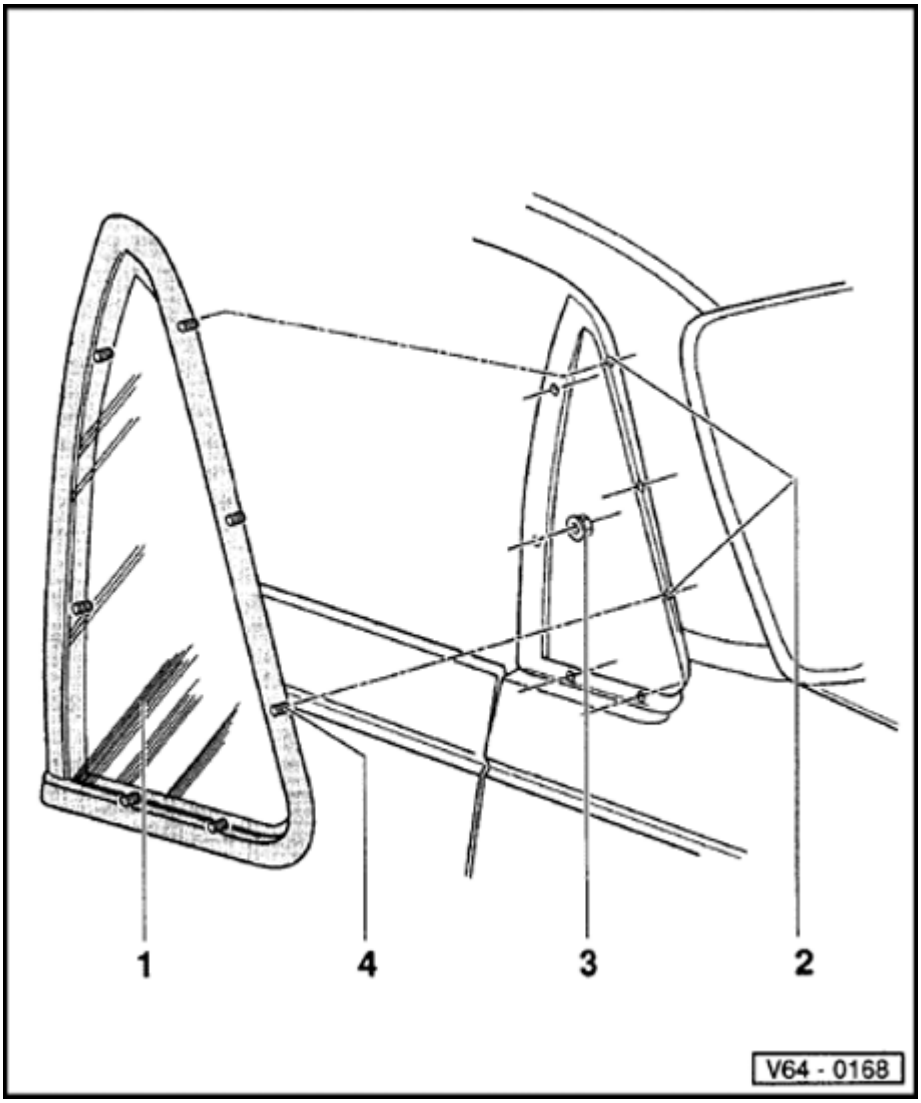

Bolted windows

Side window, removing and installing (Sedan)

1 - Side window

- To remove, first remove upper trim for B-pillar, upper trim for C-pillar, trim for D-pillar and cover for safety belt ⇒ beginning on ⇒ Page 70-38 .
- Insert side window first with pins into centering holes.

2 - Centering holes

3 - Nut

- 2.5 Nm (22 in. lb)
- Torque must be accurate.

4 - Threaded studs

64-30

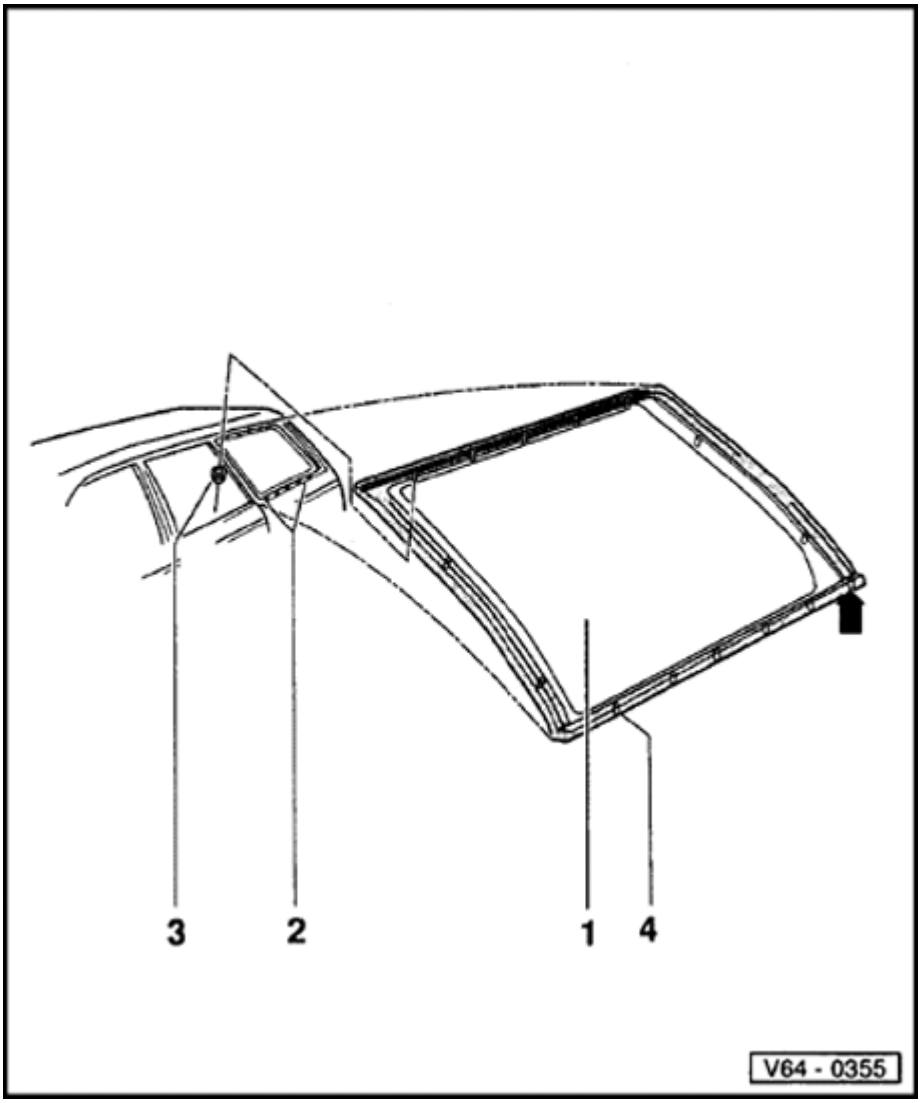

Side window, removing and installing (Wagon)

1 - Side window

- To remove, first remove upper trim for B-pillar, upper trim for C-pillar, trim for D-pillar, rear trim for luggage compartment and cover for safety belt ⇒ beginning on ⇒ Page 70-38 .
- Insert side window first with pins into centering holes.

2 - Centering holes

3 - Nuts

- 2.5 Nm
- The three nuts in area of D-pillar are mounted in the pillar.

4 - Threaded studs

Note:

Note the additional mounting point in the lower corner (arrow).

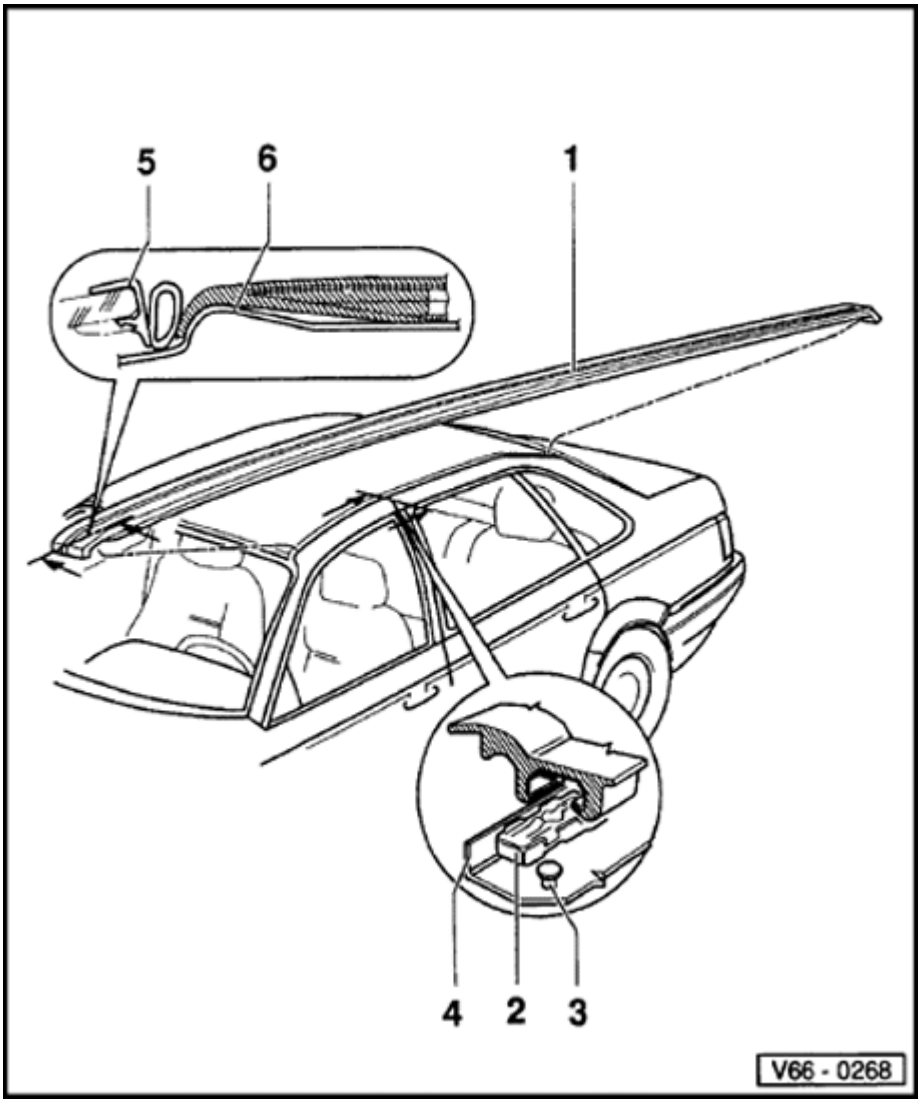

Roof moldings

Sedan

1 - Roof molding

- Removing - starting at windshield, pry off with soft plastic wedge ⇒ Page 66-5 .
- Do not bend roof molding.
- Installing - replace clips, position roof molding on roof frame at windshield end (see sectional view) and drive in clips with palm of hand.

2 - Clip (7x)

- Replace - use only once.
- Removing ⇒ Page 66-6

3 - T-stud

4 - Roof frame flange

5 - Surround with tube section (windshield)

6 - Roof frame

66-2

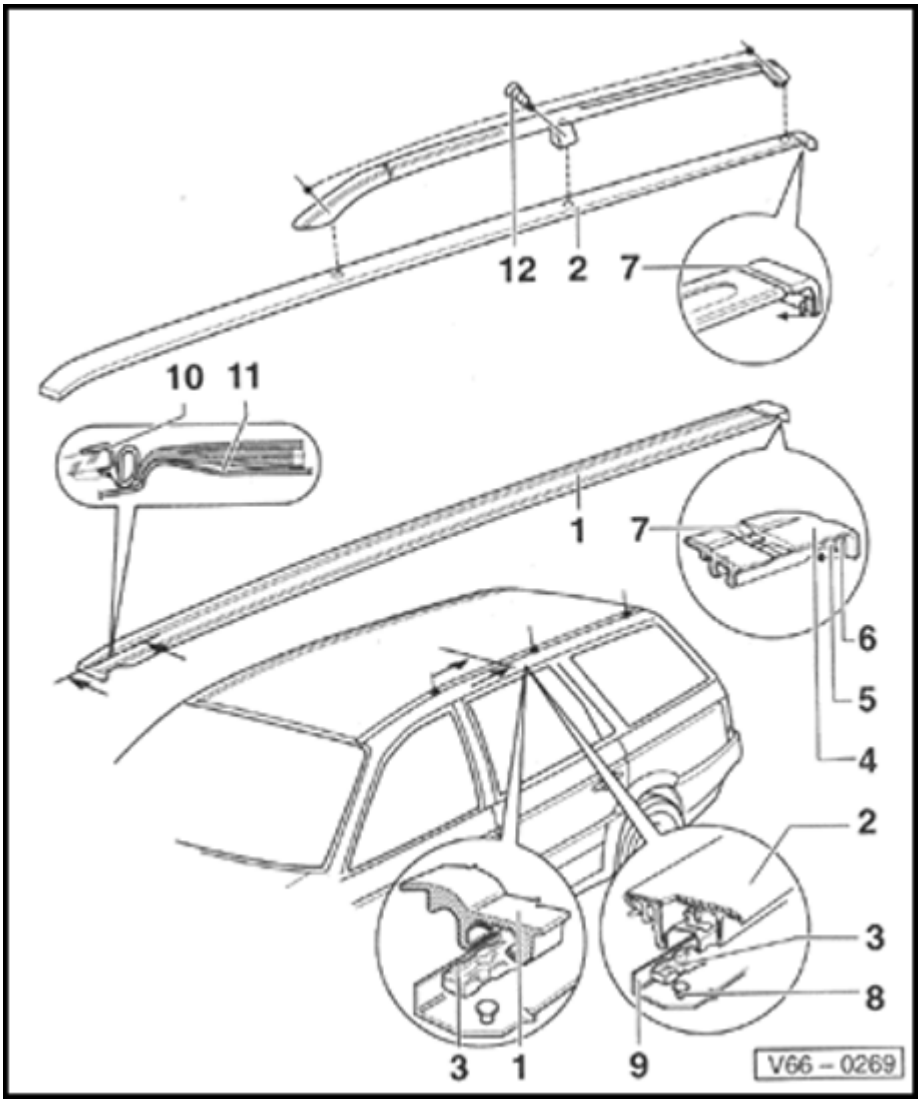

Roof frame (Wagon)

1 - Roof molding without railing

- Removing - Starting at windshield pry off with soft wedge and pull forward out of end cap ⇒ Page 66-5 .
- Do not bend roof molding.
- Installing - Always replace clips, position roof molding to roof frame/windshield (see sectional view) and drive into clips with palm of hand.
- Press on end caps firmly.

66-3

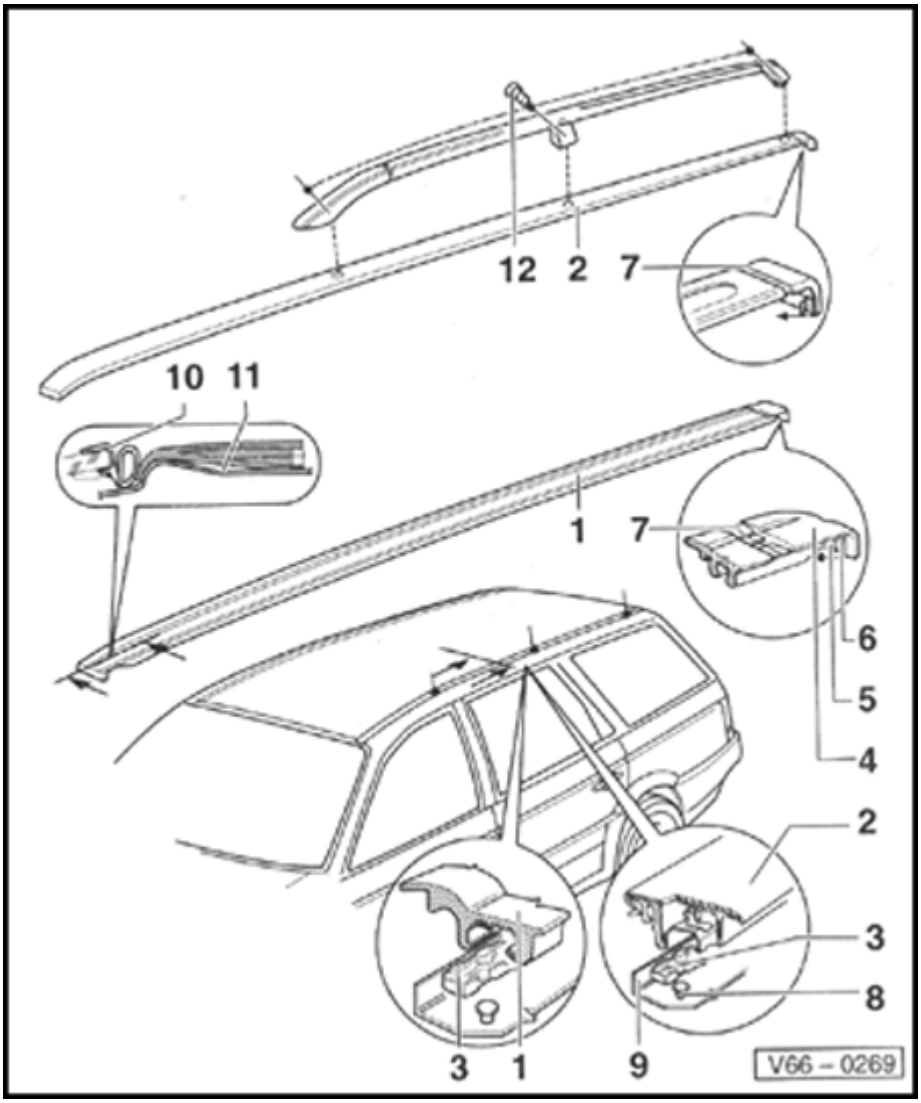

2 - Roof molding with roof railing

- Removing:
  - Remove bolts and take off roof railing.
  - Unclip roof molding and pull toward front out of end cap ⇒ Page 66-6 .
- Installing - Replace clips, position roof molding to roof frame/windshield and drive into clips with palm of hand.

3 - Clip (qty. 8)

- Replace - only use once.
- Removing ⇒ Page 66-6

4 - End cap

- For new roof molding - first clean adhesion surface on roof with cleaning solution D 009 401 04.
- Peel off protective paper and press on end cap firmly.
- When reinstalling and if remaining adhesive is not sufficient, use double-sided adhesive tape D 004 400, do not remove old foam adhesive tape.

66-4

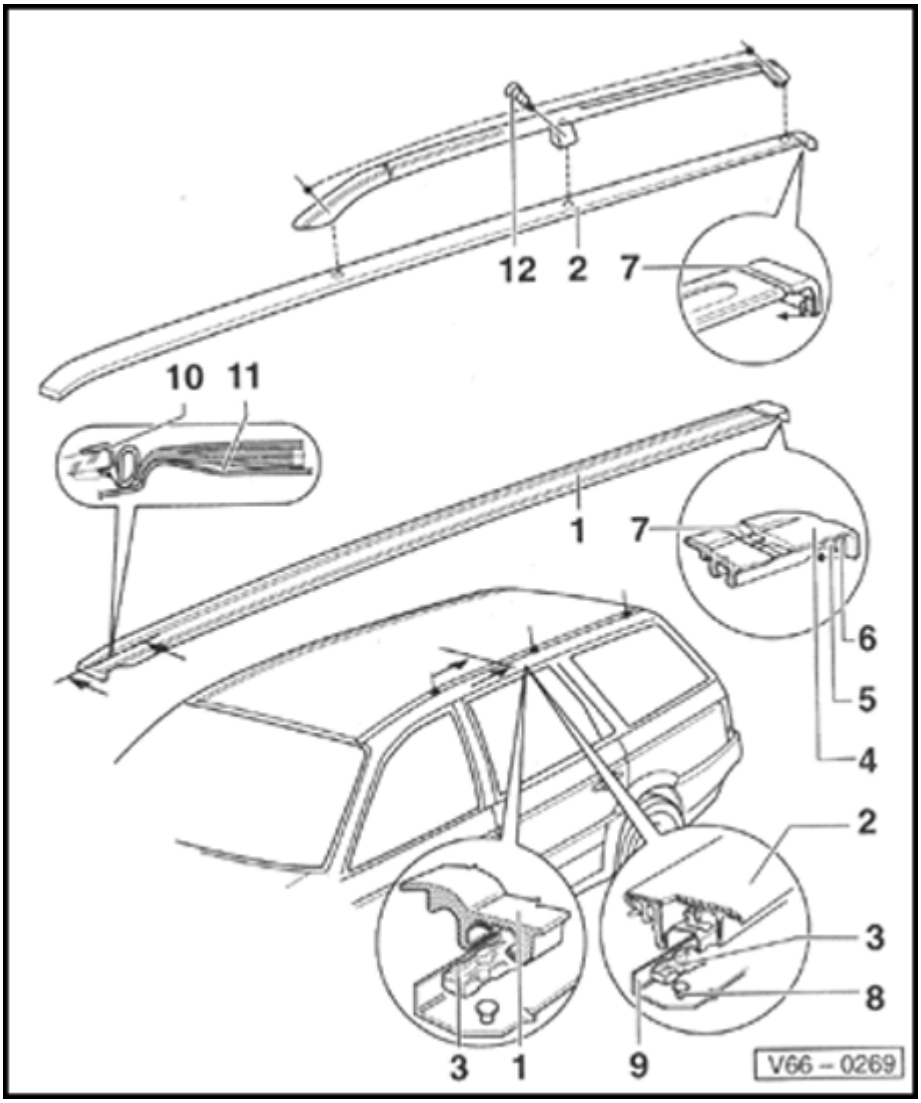

5 - Protective paper

- Remove after installation.

6 - Foam adhesive tape

7 - Installation position

- Gap without roof railing 4 ± 2.5 mm.
- Gap with roof railing 5 ± 2.5 mm.

8 - T-stud

9 - Roof frame flange

10 - Surround with tube section

11 - Roof frame

12 - Socket head bolt

- 9 Nm (7 ft lb)

66-5

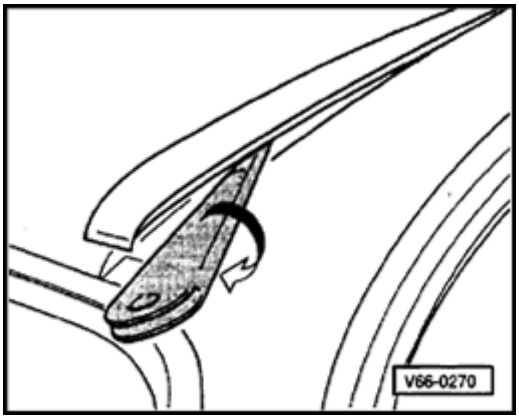

Roof molding, removing (without roof railing)

- Pry off roof molding with soft plastic wedge.

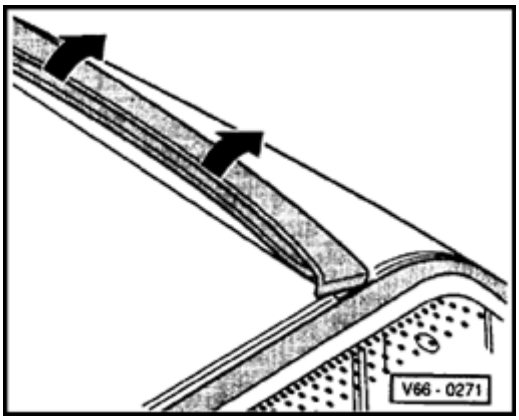

Roof molding, removing (with roof railing)

- Unclip roof molding by hand.

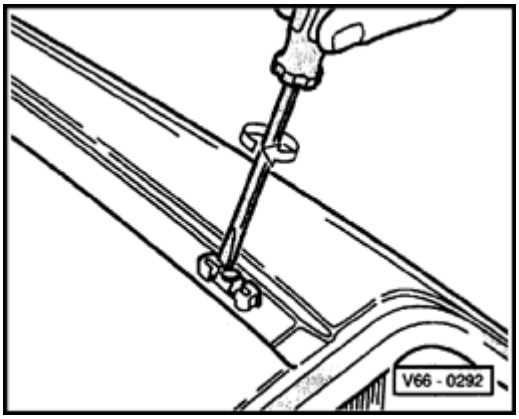

Clip, replacing

- Spread clip apart with screwdriver and remove clip.

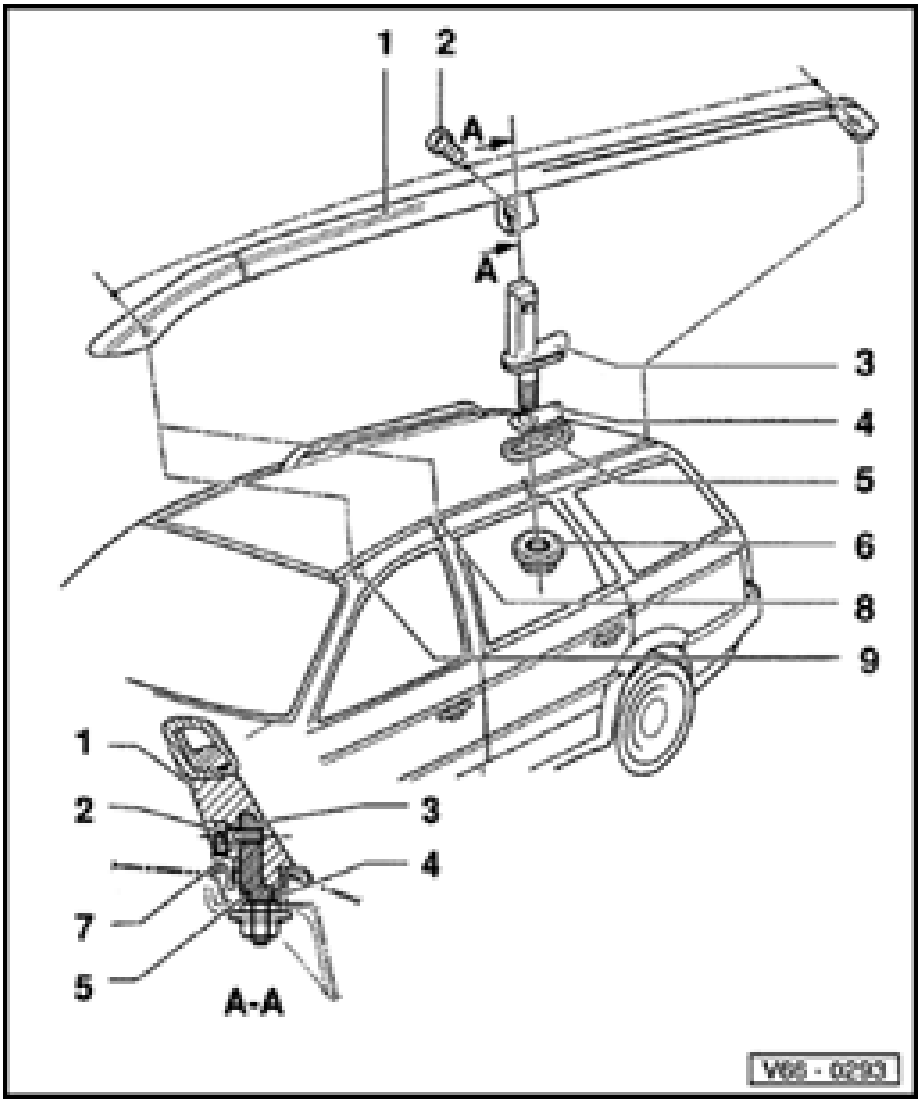

Roof railing, removing and installing

Note:

The roof railing can be retrofitted. New moldings are required for this purpose.

1 - Roof railing

- Removing:
  - Remove socket head bolts and remove roof railing toward front.
  - Remove roof railing complete with mounting studs. Headliner removing ⇒ Page 70-67 .
  - Remove nuts -6- and remove roof railing upward.

2 - Socket head bolt

- 9 Nm (7 ft lb)

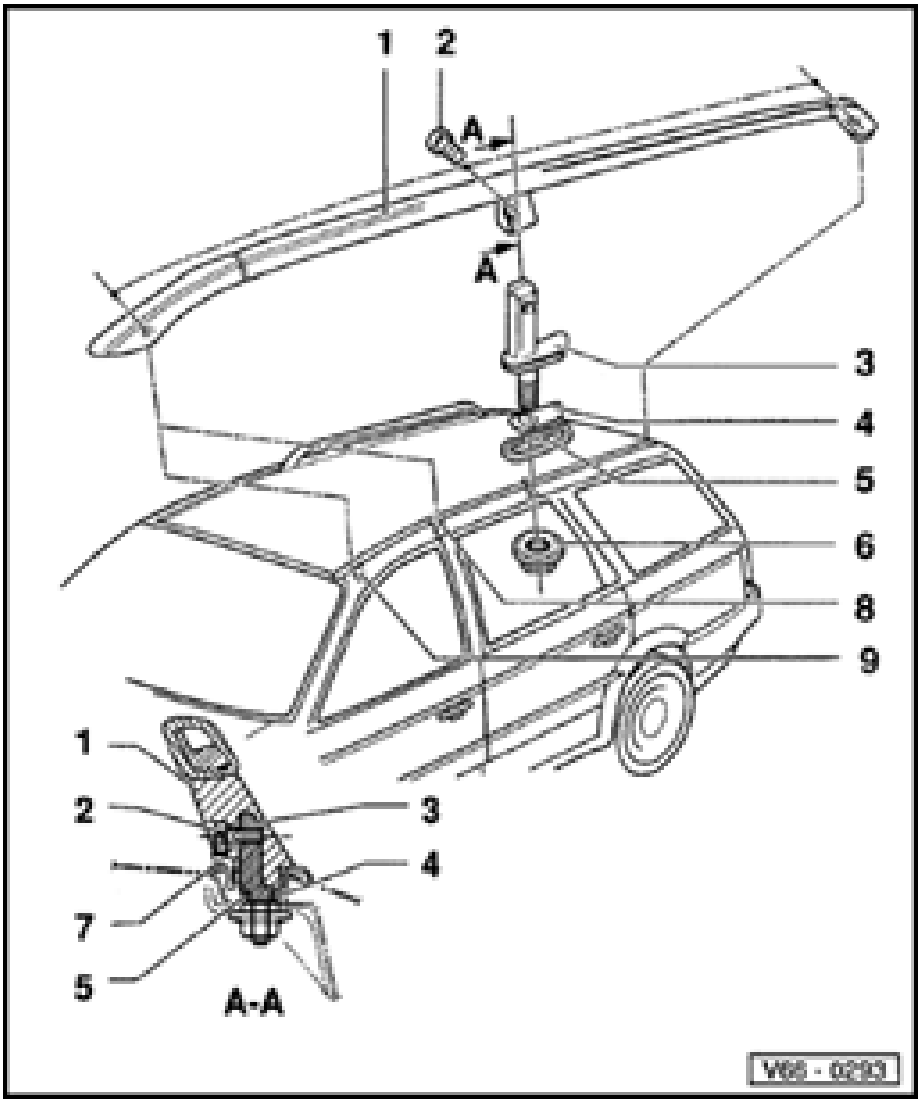

3 - Stud

- For removing or installing, first remove headliner.

4 - Teflon film

5 - Seal

6 - Nut

- 20 Nm (15 ft lb)
- For removing or installing, first remove headliner.

7 - Roof molding

- Removing and installing ⇒ Page 66-5

8 - Not applicable

9 - Front mounting point for roof railing

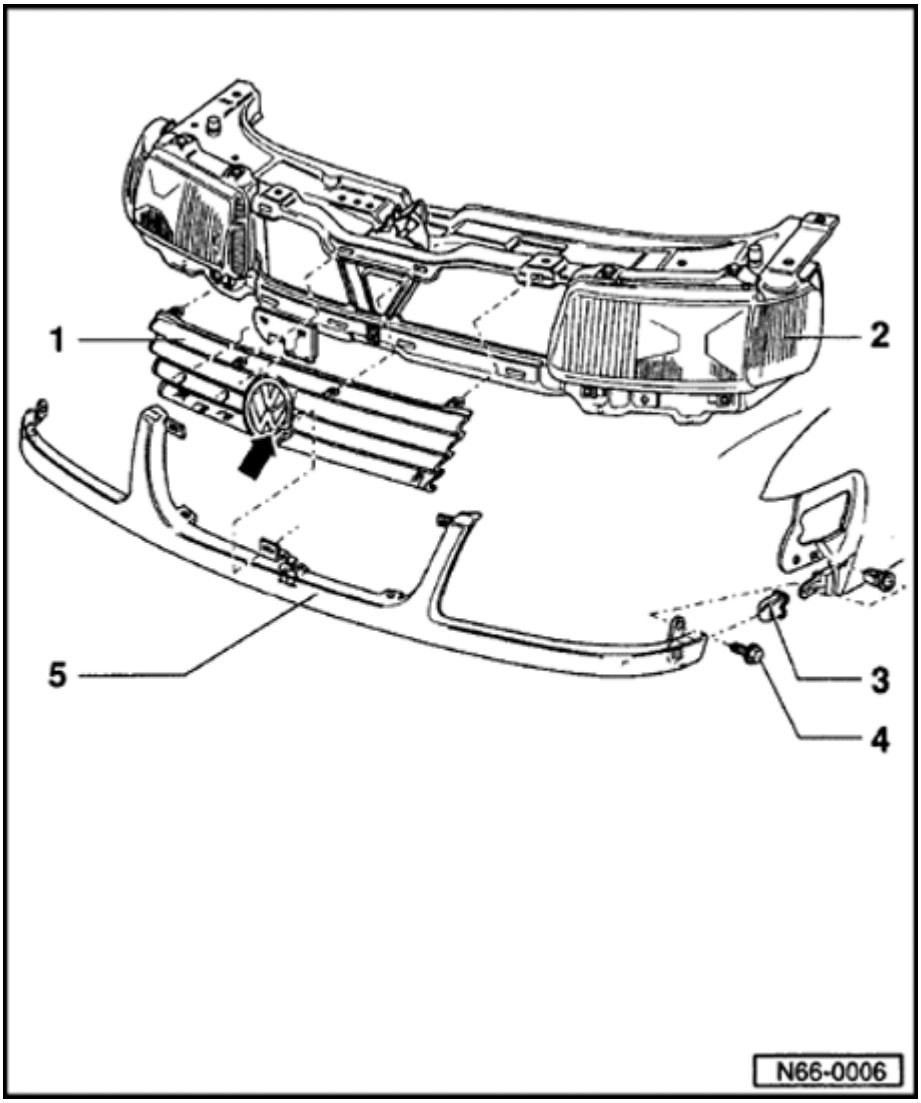

Radiator grille, removing and installing

1 - Radiator grille

- Material: ASA
- Removing: Release upper and lower locking lugs with screwdriver, pull grille off lock carrier.
- Installing: Align radiator grille with center locating point - arrow- and clip in.

2 - Trim

- To remove, pry out trim frame.

3 - Guide

4 - Bolt/washer assembly

5 - Trim frame

- Painted in body color.

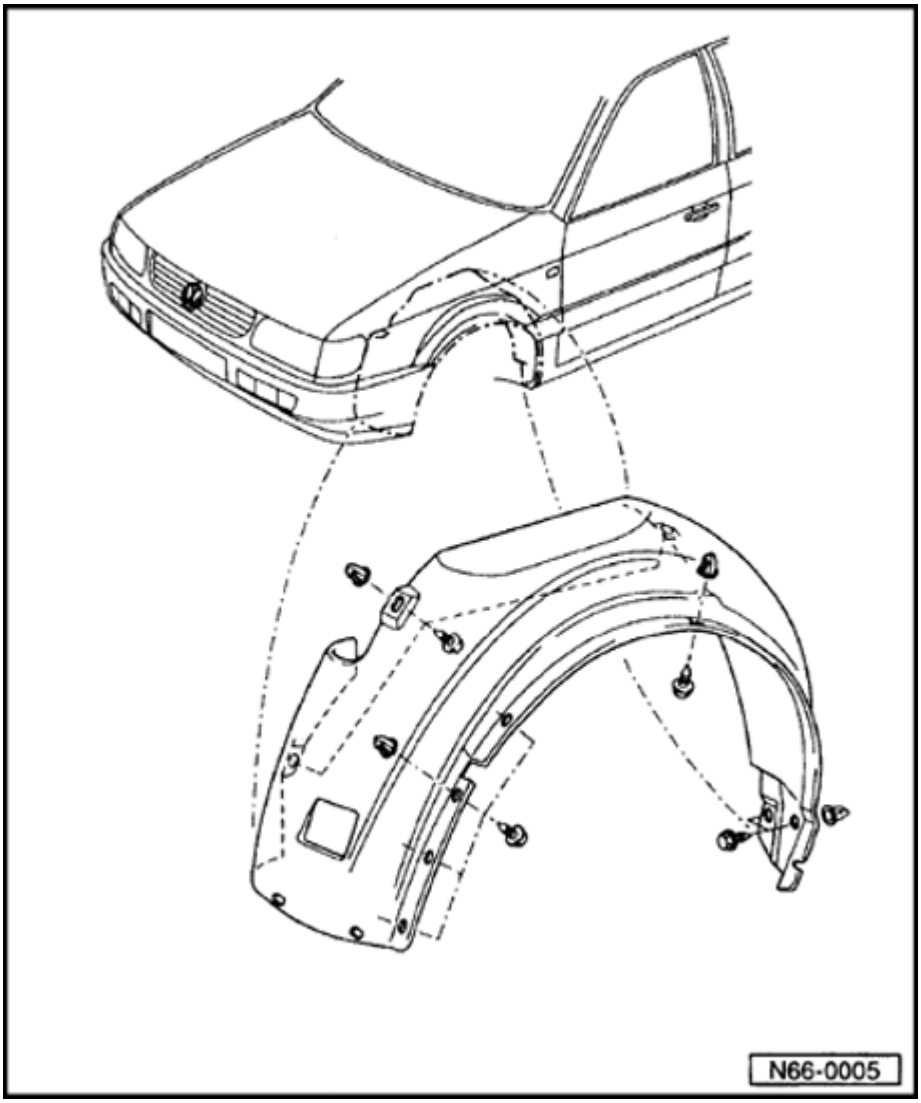

Wheel housing liner

- Remove radiator grille and trim ⇒ Page 66-9 .
- Remove bolts -1- (bolts connect wheel housing liner and front bumper cover).
- Remove wheel house liner from wheel well.
- Remove air conditioner reservoir (on left vehicle side if equipped with A/C).

Exterior mirror

Special tools

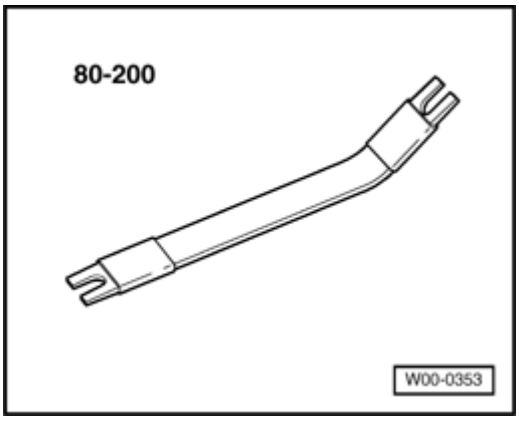

- 80-200 Pry bar

66-12

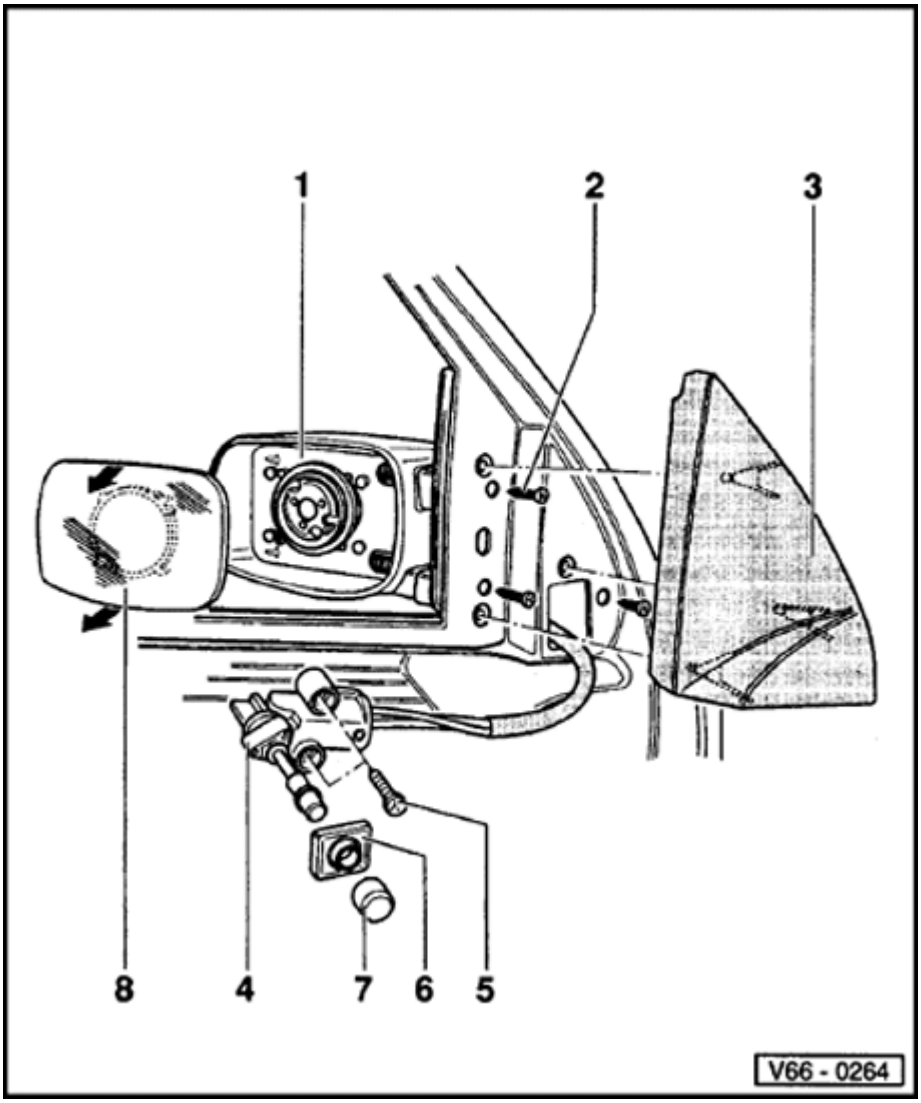

Exterior mirror, assembly overview

Note:

To remove exterior mirror, first remove door trim panel.

1 - Mirror housing

2 - Screw 2 Nm (18 in. lb)

3 - Cover

4 - Adjustment mechanism (manual)

5 - Screw

6 - Boot

66-13

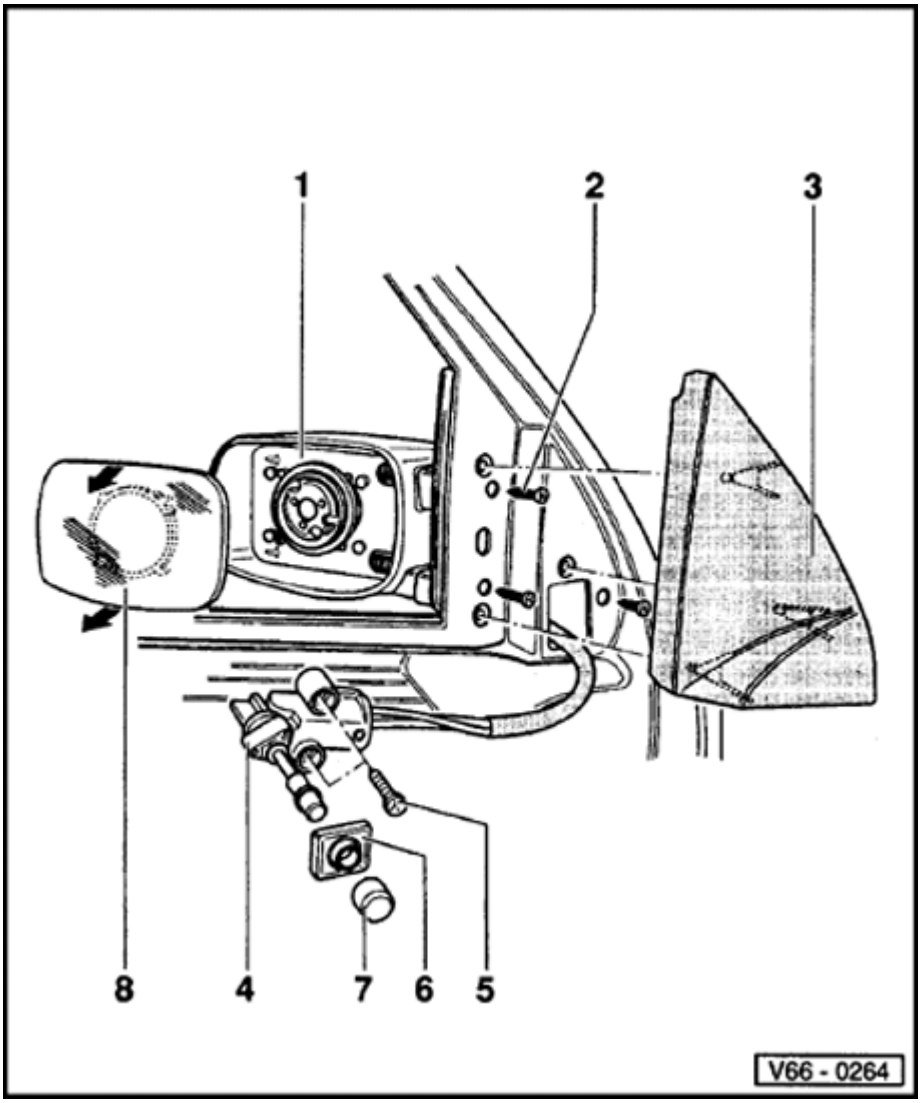

7 - Operating knob

8 - Mirror glass

- Clipped in (manual and electric).
- Removing - First press off mirror glass at bottom, then on top (special tool pry bar 80-200). Protect mirror against damage.
- Installing - Insert mirror with guide studs onto mountings and press on. Apply pressure only on center of mirror and be sure to wear protective gloves.

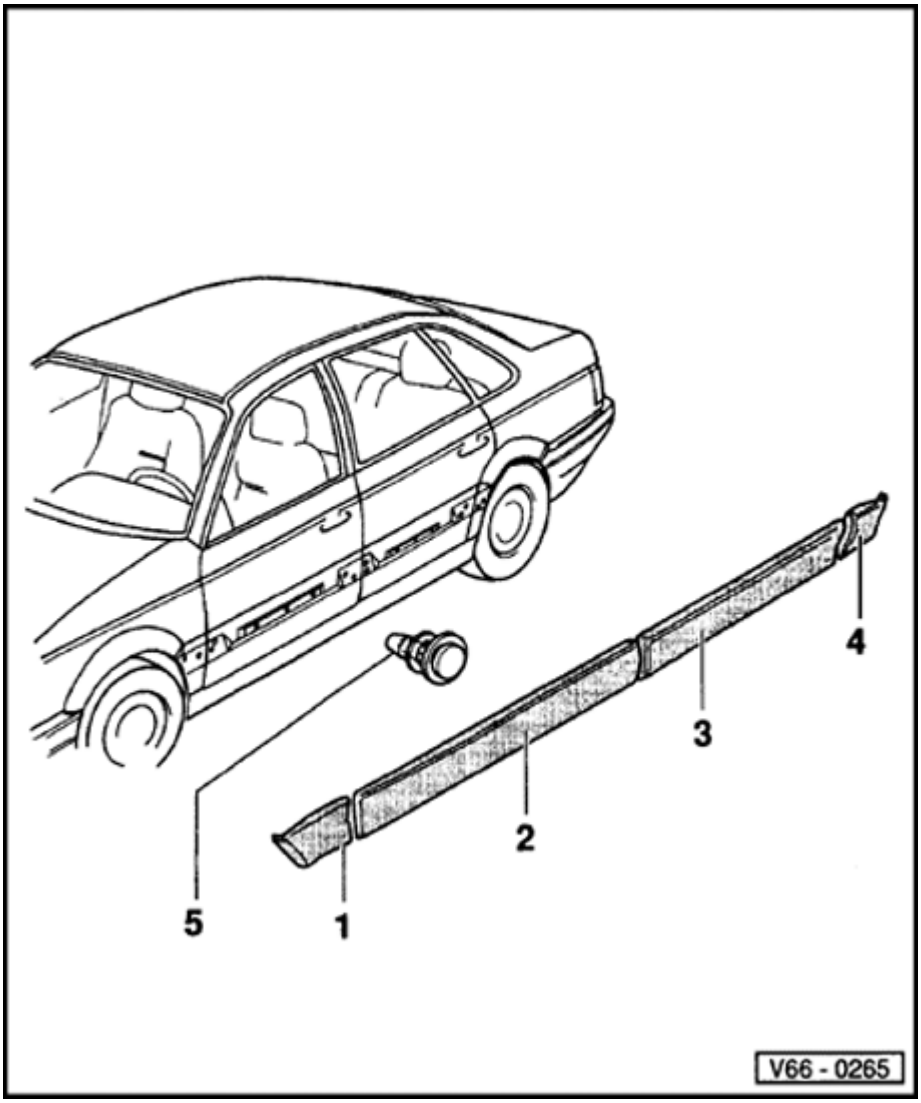

Protective moldings

1 - Molding, front

- Clipped on 2 x
- Material: PP/EPDM

2 - Front door molding

- Clipped on 6 x
- Material: PP/EPDM

3 - Rear door molding

- Clipped on 5 x
- Material: PP/EPDM

4 - Rear molding

- Clipped on 2 x
- Material: PP/EPDM

5 - Clip for sleeve

- If sleeve is damaged, replace sleeve and clip.
- Insert clip with sleeve into molding.

Inside mirror

Inside mirror, removing and installing

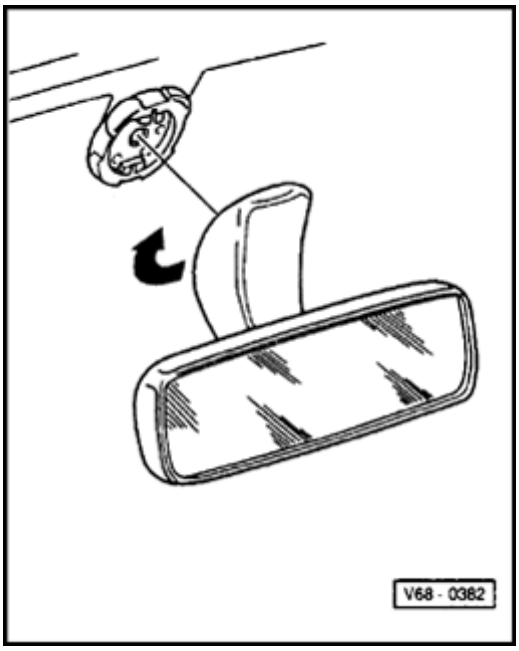

Removing

- Twist inside mirror with base 15° - 20° from installed position (arrow).

Installing

- Position inside mirror with base 15° - 20° against installation position and turn until stop spring engages.

68-2

Inside mirror, repairing using glass/metal adhesive

Materials

- Glass-metal adhesive kit D 000 703 A1

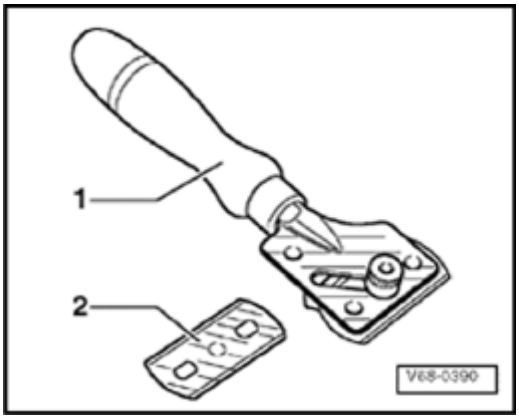

Required tools

1 - Glass scraper (commercially available)

2 - Blade (commercially available)

- Twist inside mirror 15° - 20° from installed position (arrow) and remove from base.
- Clean PUR adhesive from mirror base using wire brush.
- Remove spacer protrusion with emery paper (360/400 grain) placed on flat surface.
- Keep ground-off surface free of dirt and grease.
- Remove PUR adhesive material and primer from windshield down to ceramic coating using glass scraper.
- Clean adhesive surface with adhesive remover D 002 000 10 or cleaning fluid D 009 401 04.

68-3

CAUTION!

Do not damage ceramic coating. Scratches will always be visible.

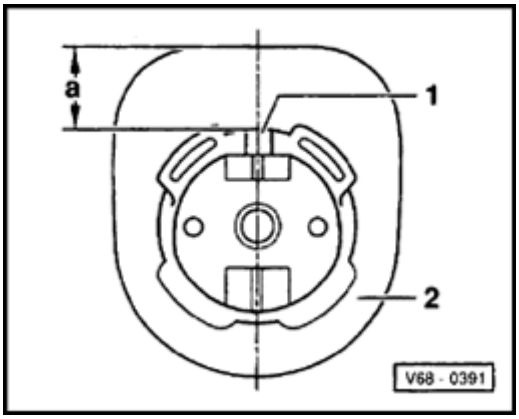

- From the outside, mark position of mirror base on windshield.

1 - Notch must point up.

2 - Position mirror base in center of ceramic area = 14 mm.

- Cut nylon mesh fabric exactly according to size of mirror base.

Note:

Wear rubber gloves.

- Apply adhesive evenly on mirror base.
- Apply nylon mesh fabric on mirror base.
- Apply additional adhesive on nylon mesh fabric by dabbing with tube.

Press to the windshield.30 seconds from applying nylon mesh fabric on the adhesive.

- Press mirror base firmly onto windshield for 15 seconds (do not use force).
- Remove excess adhesive with rag.

Note:

The inside mirror can be installed after 15 minutes.

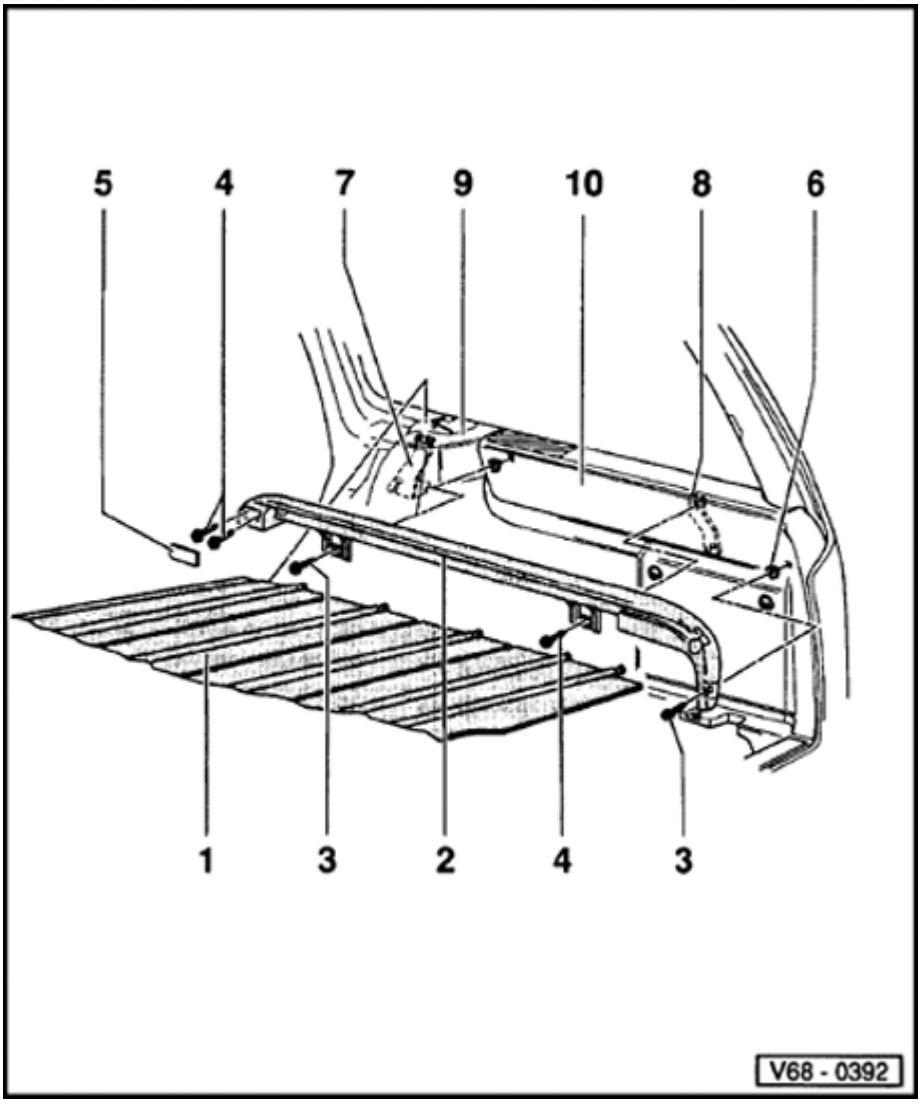

Luggage compartment cover, removing and installing

1 - Cover

- Cover can be secured to backrest felt covering with Velcro strip.

2 - Guide rail

3 - Self-tapping screw

4 - Countersunk screw

5 - Cover cap

6 - Spring nut

7 - Retaining bracket

- To remove and install, remove inertia reel cover and front luggage compartment trim ⇒ Page 70-51 .

68-5

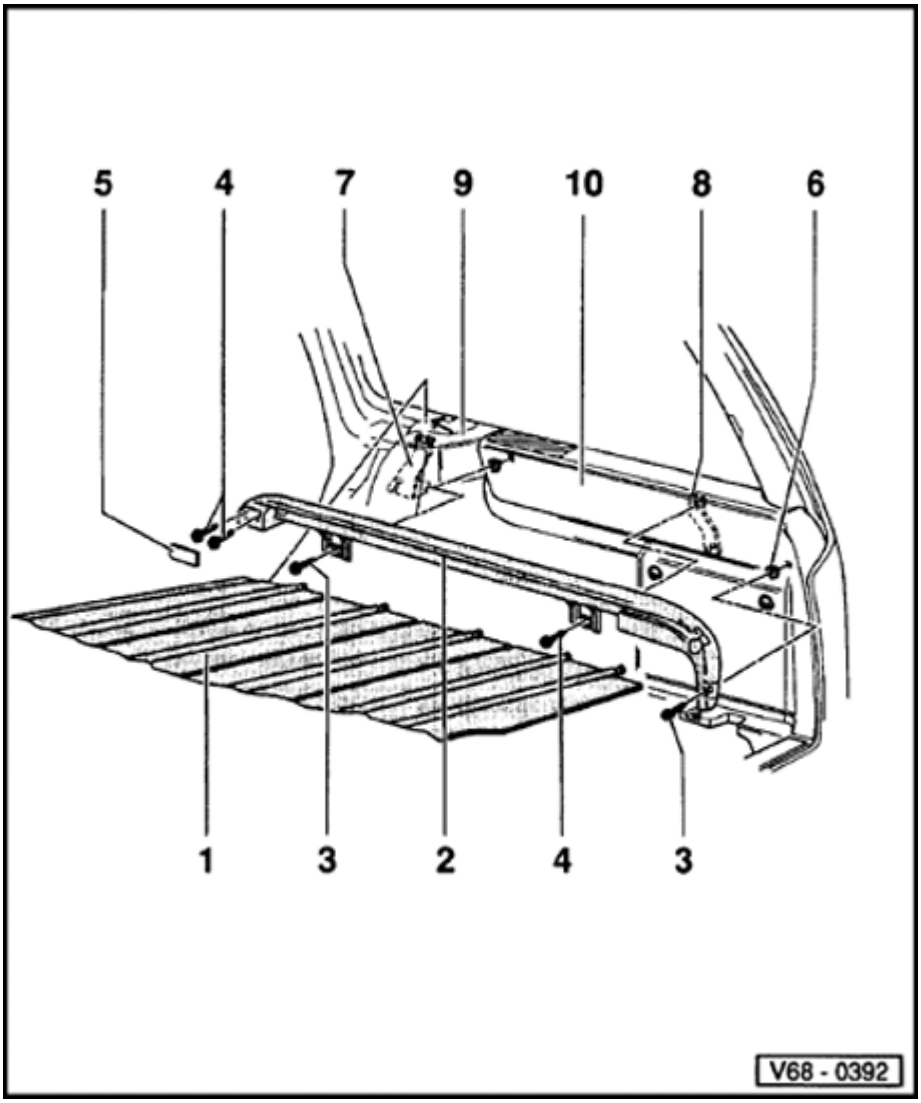

8 - Securing bracket

- To remove and install remove rear luggage compartment trim panel ⇒ Page 70-53 .

9 - Inertia reel cover

- Removing ⇒ Page 70-50

10 - Rear luggage compartment trim panel

- Removing ⇒ Page 70-53

Luggage compartment cover, retrofitting

- Remove front and rear luggage compartment trim from ⇒ Page 70-51 .

- Cut out marked openings in inertial reel cover and rear trim (holes for spring nut 9 mm wide, 13 mm high, center hole 16 mm diameter). Holes are marked on inside for PR No. 3U2. On vehicles without marking use guide rail as template.

- Insert retaining bracket into inertia reel and fasten with screws.

- Install securing bracket to side trim.

- Reinstall trim.

- Loosely install guide rails and align toward rear according to outside shape of trim.

- Tighten all screws.

- Install luggage cover.

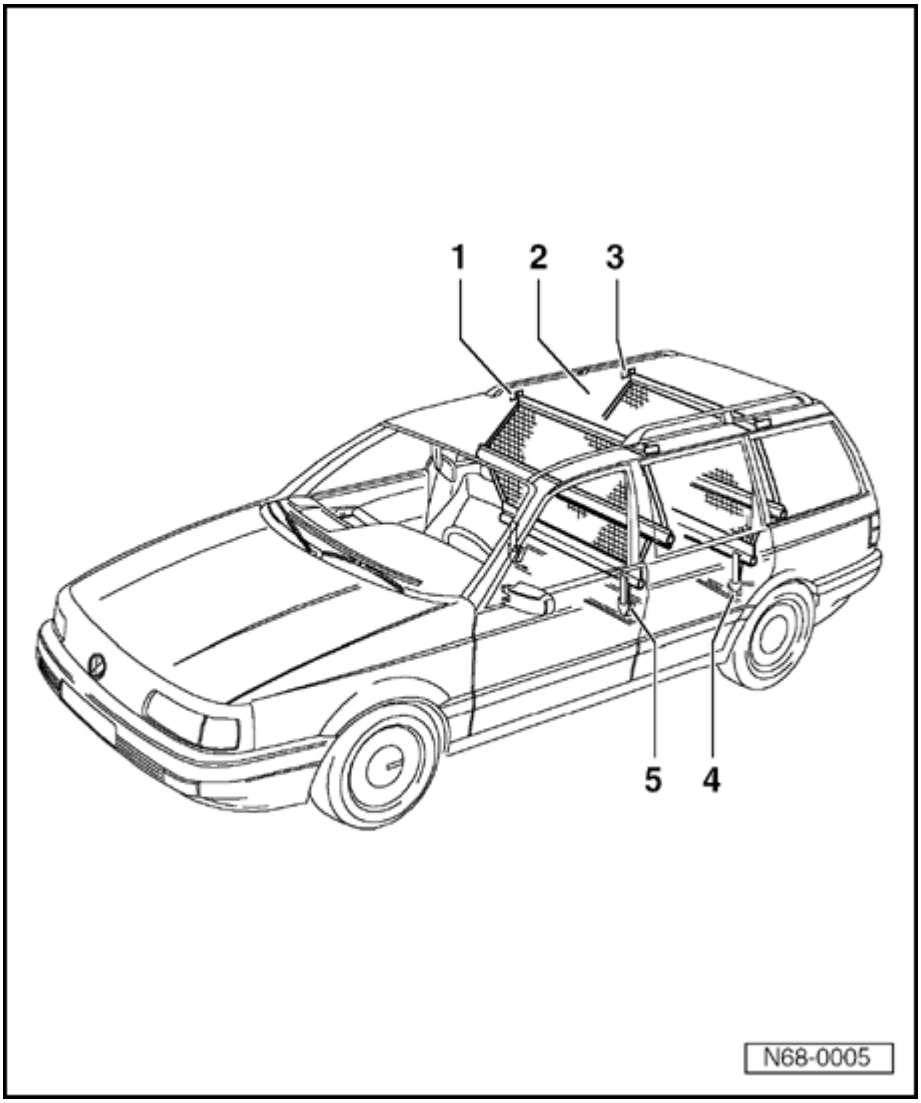

Screen separator wall, retrofitting

1 - Reinforcement plate, upper front,

- Installing ⇒ Page 68-8

2 - Screen separator wall

- Installing ⇒ Page 68-13

3 - Reinforcement plate, upper rear

- Installing ⇒ Page 68-9

4 - Securing eyes, lower rear

- Securing eyes are also existing eyes for child safety belt system.

5 - Securing eye, lower front

- Installing ⇒ Page 68-10

Reinforcement plates and securing eyes, installing

Note:

Procedures are described for the right side, the left side is the same (mirror image).

- Remove headliner ⇒ Page 70-62 .

Reinforcement plate, upper front, installing

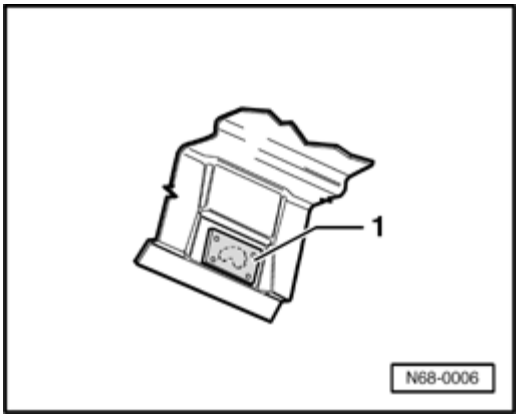

- Expose existing mounting points for reinforcement plate at roof header by removing tape -1-.

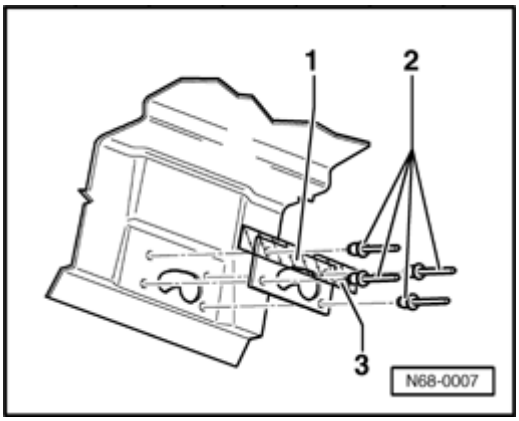

- Secure reinforcement plate -1- with rivets -2-.
- Glue-in felt strip -3- as illustrated.

68-9

Reinforcement plate, upper rear, installing

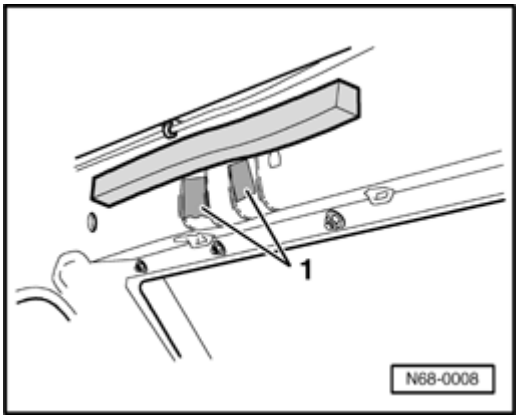

- Expose existing mounting points for reinforcement plate at roof header by removing tape -1-.

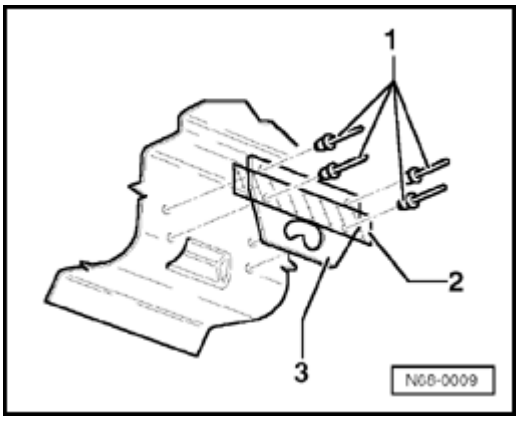

- Secure reinforcement plate -3- with rivets -1-.
- Glue in felt strip -2- as illustrated.

68-10

Securing eye, lower front, installing

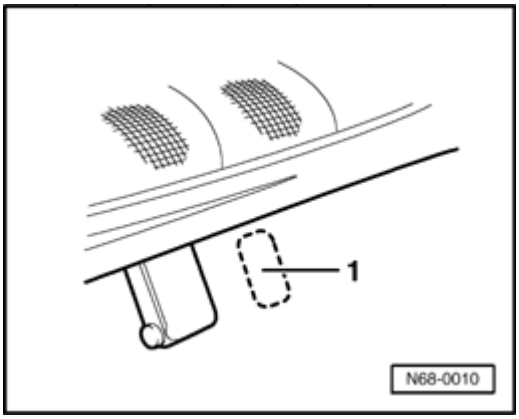

- Remove rear seat bench ⇒ Page 72-32 .
- Cut out carpet at indentation -1- at seat crossmember on both right and left sides.

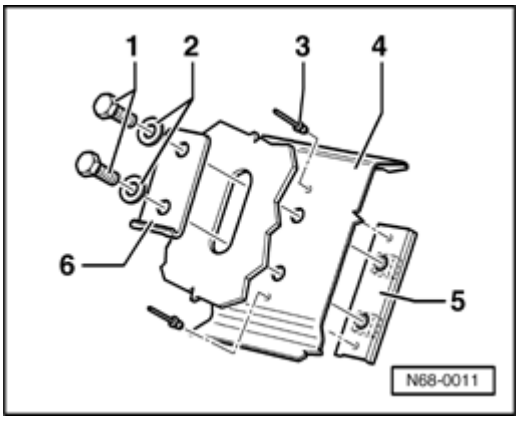

- Hold reinforcement plate -5- from rear against seat crossmember -4- and attach with rivets -3-.
- Reinstall carpet.
- Fasten securing eye -6- with bolts -1- and washers -2-.

68-11

Openings for cover caps, cutting out

Opening for cover caps in liner for C-pillar, cutting out

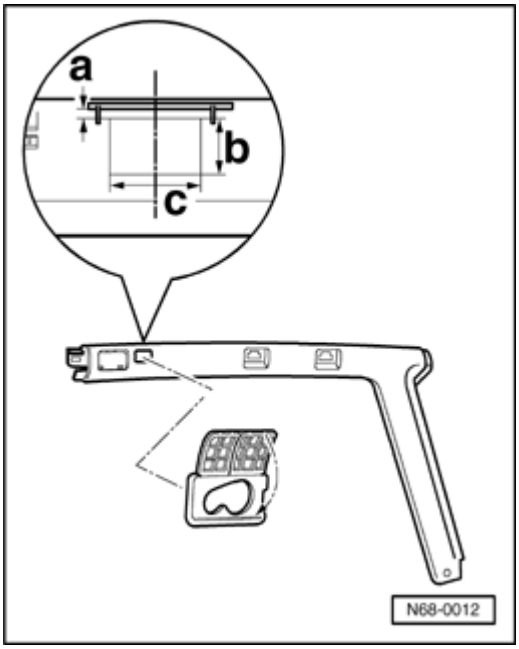

- Cut out already marked opening on back side of trim -1-.

For trim that does not have marked opening, cut trim using the following dimensions:

a = 3 mm

b = 20 mm

c = 35 mm

68-12

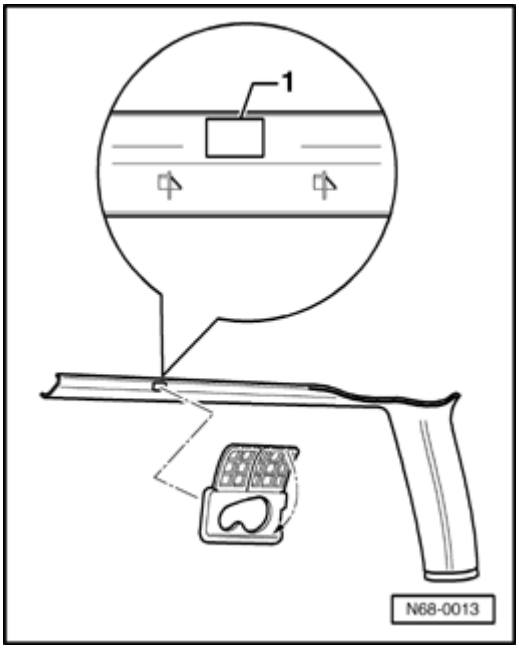

Opening for cover caps in liner for upper D-pillar, cutting out

- Cut out already marked opening on back side of trim -1-.

68-13

Screen separator wall, installing

Top part of screen, installing

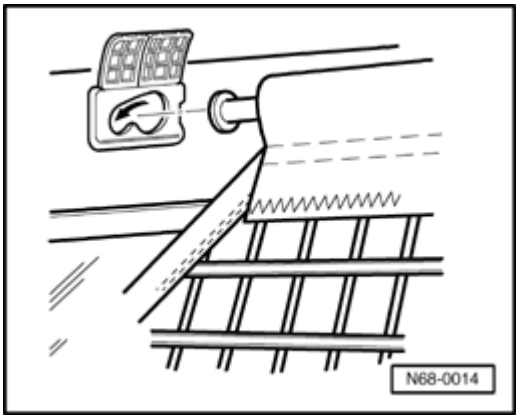

- Insert upper bar at one side into holder in roof header and slightly push forward.
- Insert other side of bar against spring tension into holder of roof header and also push slightly to front.

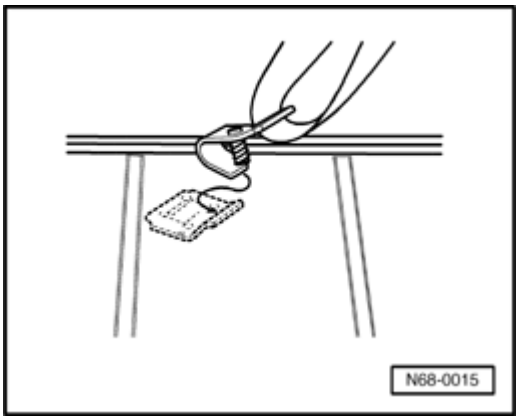

Lower part of screen, attaching to loading deck

- Insert both strap hooks of lower bar into existing eyes (eyes for child safety belt system) on loading platform and tension by pulling on either strap end.

68-14

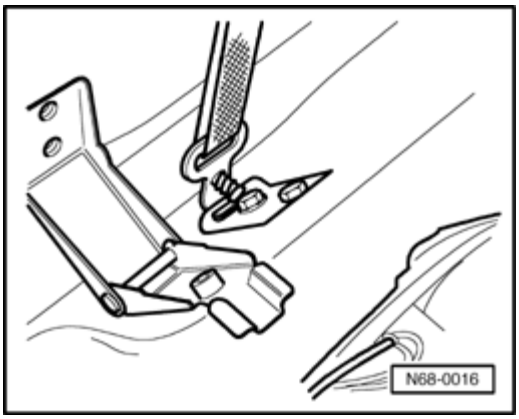

Lower part of screen, attaching to foot well

- Raise rear seat bench.

- Attach tensioning straps to eyes on seat traverse bar and tension straps by pulling on applicable end.

Screen separator wall, removing

- To remove, first disengage tensioning straps. Push button marked "press" and pull strap through until hook can be disengaged. At top bar on one side pull slightly toward rear, repeat for other side and pull bar out of each bracket.

Safety restraint system

Vehicles with emergency tensioning seat belt retractors

CAUTION!

- ***Testing, removing, installing and repairs must only be performed by qualified personnel.***
- ***The pyrotechnic propellant has no expiration date. It has unlimited maintenance-free life.***
- ***Belt tensioner components may not be opened or repaired. Always use new parts.***
- ***Belt tensioner units that are mechanically damaged (dents or cracks) must be replaced.***
- ***The belt tensioner unit should be installed immediately after removing it from its packaging.***
- ***If work is interrupted, return belt tensioner to its package until work can continue.***
- ***DO NOT leave a tensioner unit unattended if it has been removed from the package.***
- ***The belt tensioner unit must not come in contact with grease, cleaning solutions or similar substances.***
- ***Belt tensioner units must not be exposed to temperatures above above 100° C (1 ° F).***

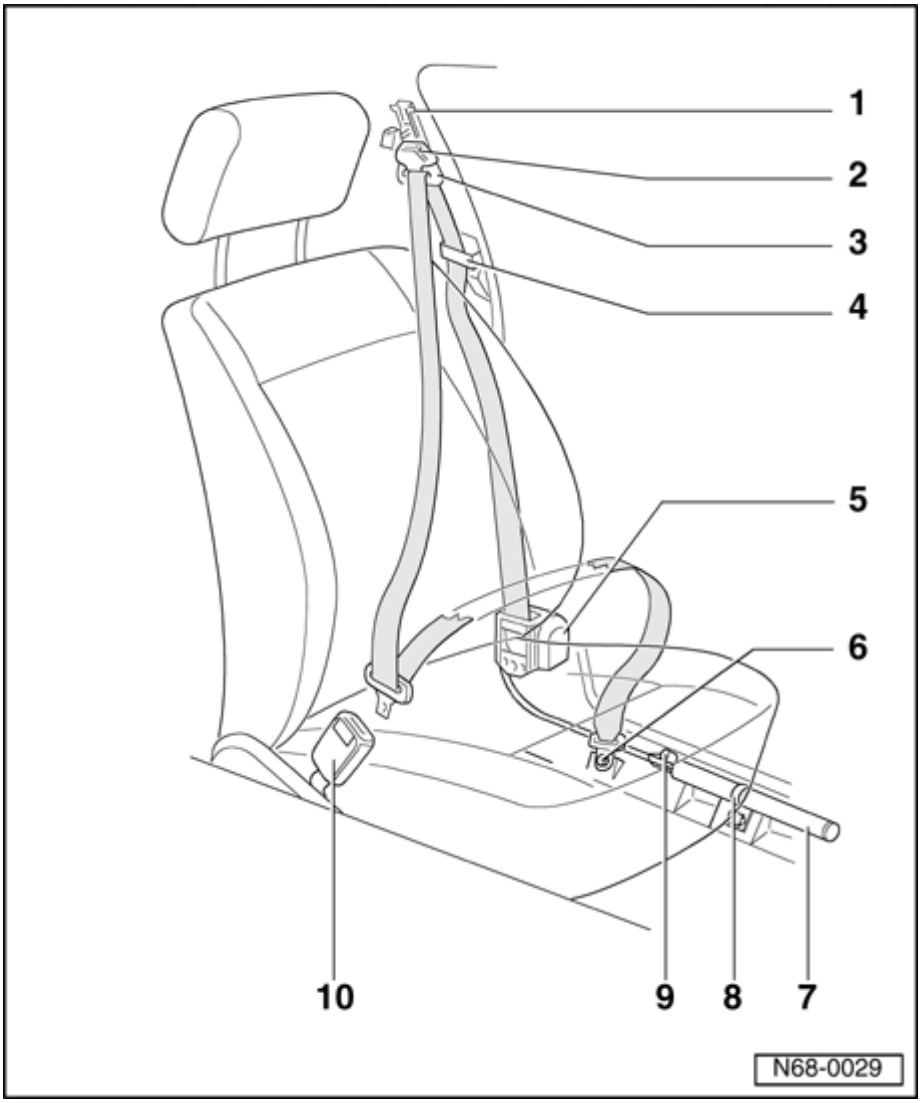

Seatbelts

Front seat belts with emergency tensioning seat belt retractors, removing and installing

CAUTION!

Before starting any body disassembly, straightening or any other body repair or cutting work, remove the belt tensioning units.

CAUTION!

After an accident in which one or more belt tensioners were activated, both seat belts must be replaced (belts will no longer retract).

1 - Belt height adjustment fitting

- Removing ⇒ Page 69-7

2 - Belt relay

69-3

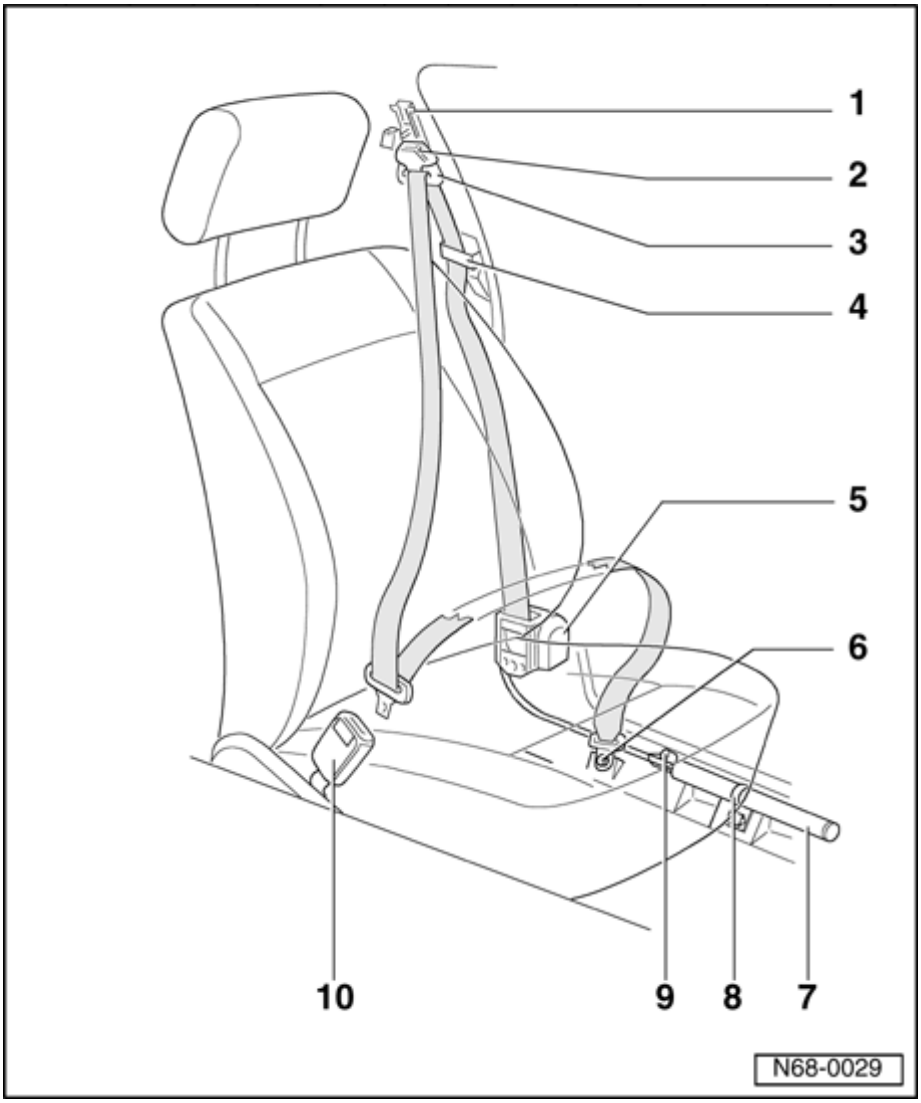

3 - Cap

- Snapped on

4 - Belt guide

- Fastened with two screws.
- Tightening torque: 1.5 Nm (13 in.lb)

5 - Belt retractor

- To remove, remove upper and lower B-pillar trim and sill panel trim.
- Locking tabs determine position of belt tensioning unit.
- Bolt tightening torque: 40 Nm (30 ft lb)

6 - Front anchor

- Removing ⇒ Page 69-8

69-4

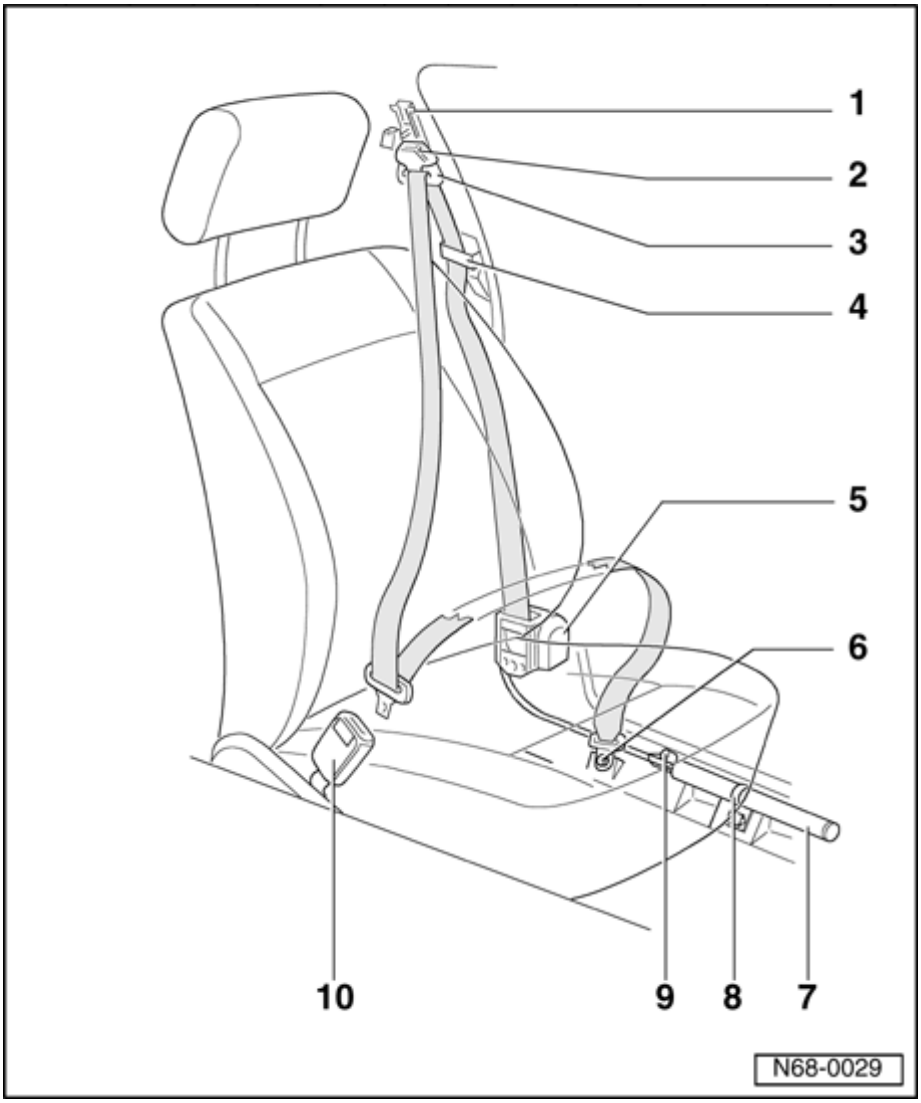

7 - Tensioning unit

- Integral part of seat belt.
- Loosening locking nut - 9 - makes tensioner inactive, tightening nut reactivates tensioner.

8 - Bracket

9 - Locking nut

- Integral part of tensioning unit.

10 - Front belt buckle

- Removing ⇒ Page 69-9

69-5

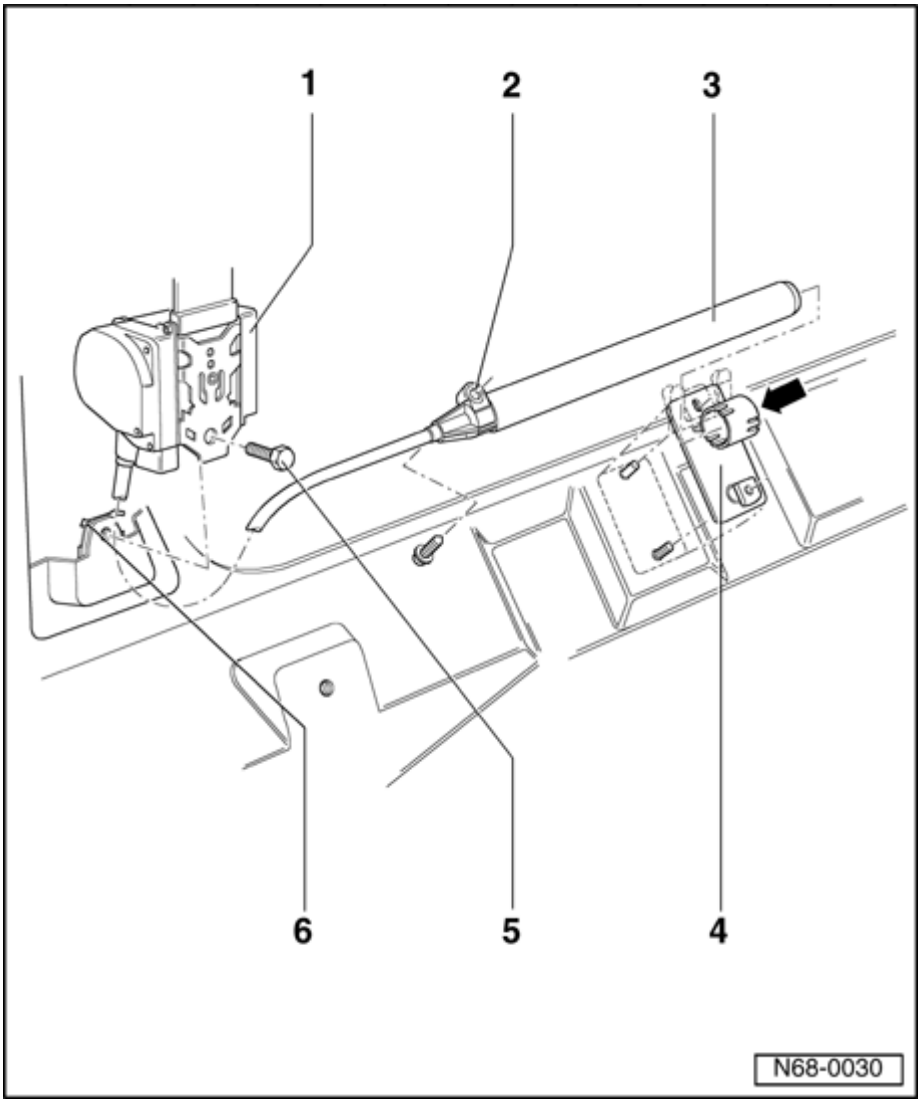

Belt retractor with tensioning unit, removing and installing

CAUTION!

Always follow prescribed work sequence for removing and installing belt retractor.

1 - Belt retractor

2 - Lock nut

- 23 Nm (17 ft lb)

3 - Tensioning unit

4 - Retainer

5 - Bolt

- 40 Nm (30 ft lb)

6 - Retaining slots

- Determine mounting position of belt retractors.

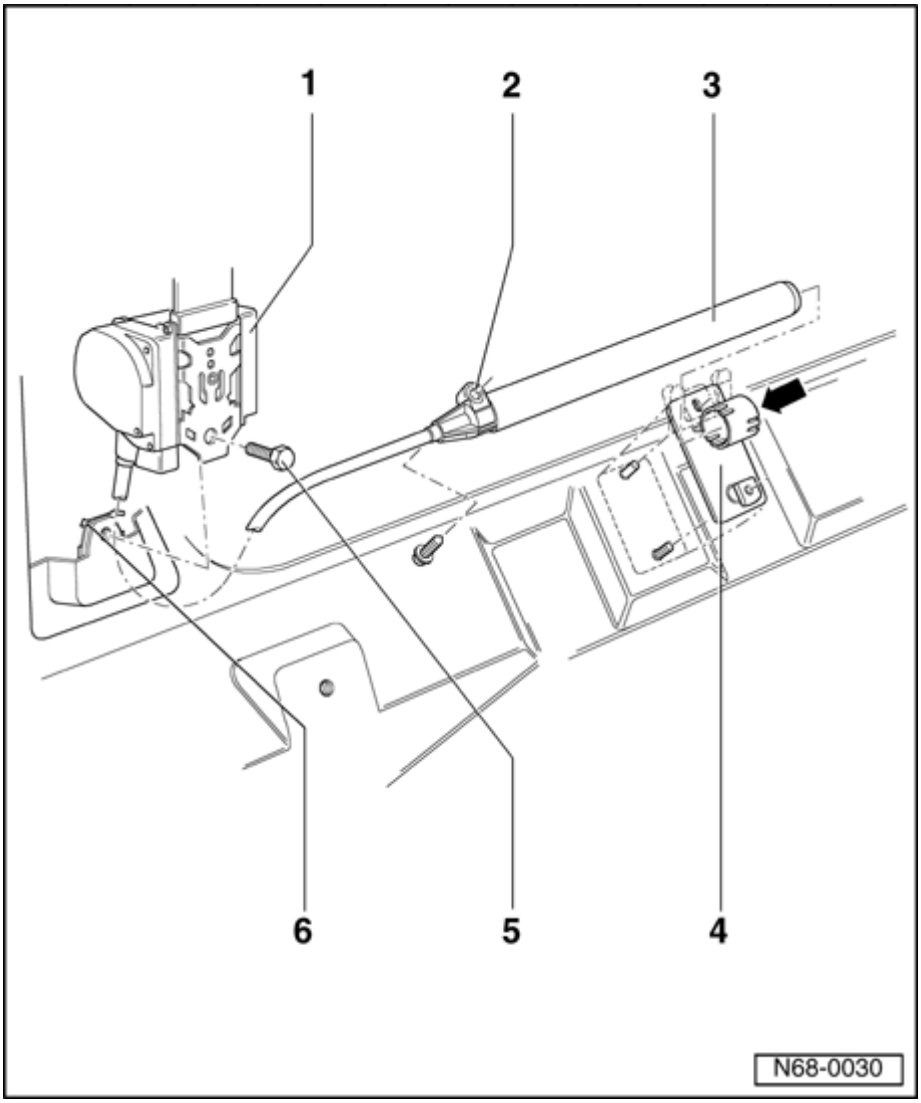

Removing

- Remove sill plate.
- Loosen lock nut - 2 - which will release tensioning unit - 3 - and deactivate it.
- Remove front trim ⇒ Page 69-9 .
- Remove cap from belt relay and remove relay.
- Remove upper and lower trim from B-pillar.
- Remove belt guide.
- Remove belt retractor - 1 -.
- Pull out tensioning unit - 3 - from retainer - 4 -.

CAUTION!

- ***Installation is done in the reverse of removal.***
- ***Always follow the prescribed work sequence.***

69-7

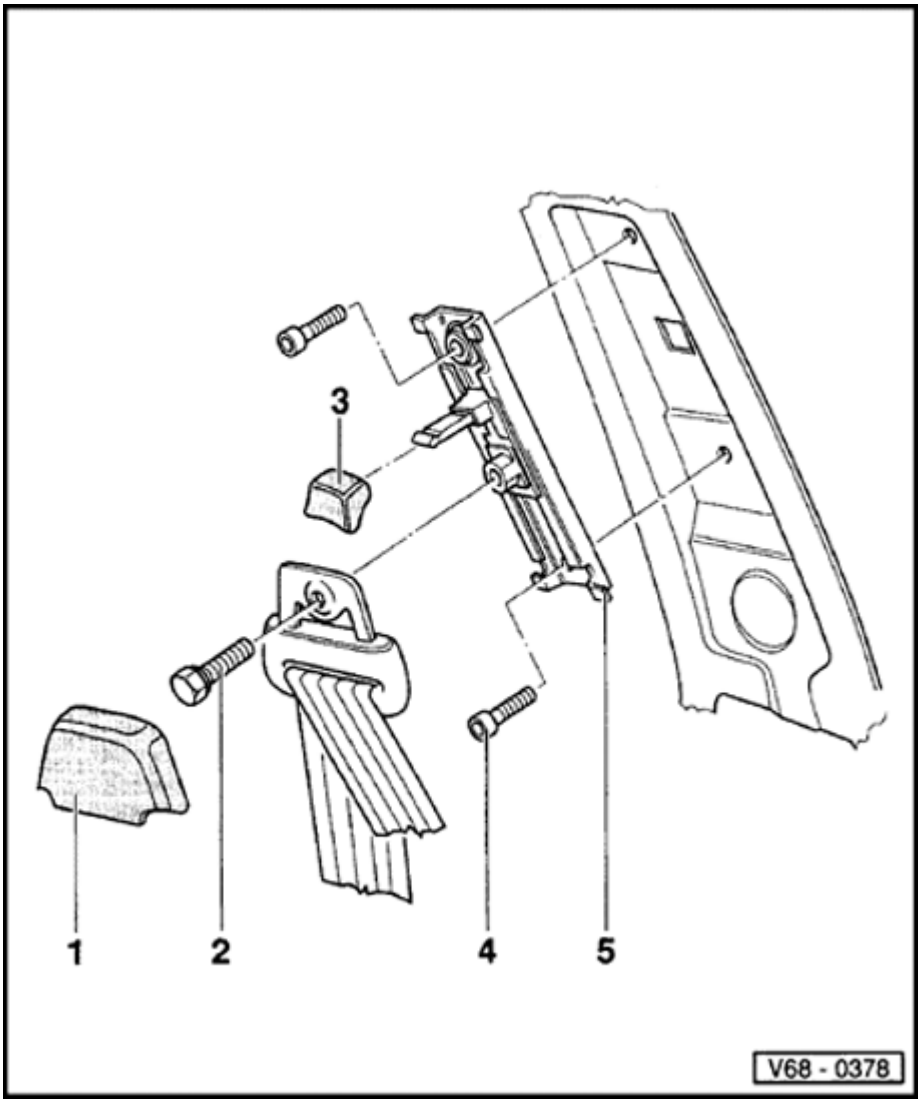

Seat belt height adjuster, removing and installing

1 - Cover

- Unclip

2 - Bolt

- 40 Nm (30 ft lb)

3 - Operating button

- Pull off

4 - socket-head bolt

- 23 Nm (17 ft lb)

5 - Belt height adjuster

- Removing: First remove trim for B-pillar.

69-8

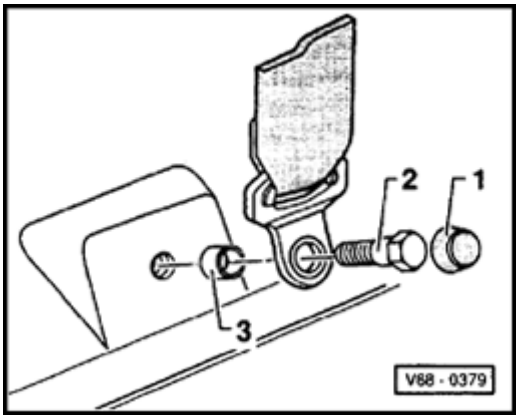

Front belt anchor, removing

1 - Cap

2 - Bolt 40 Nm (30 ft lb)

3 - Spacer sleeve

With belt anchor installed, left-hand belt as seen from above is turned 180° to the right. The right-hand belt as seen from above is turned 180° to the left.

69-9

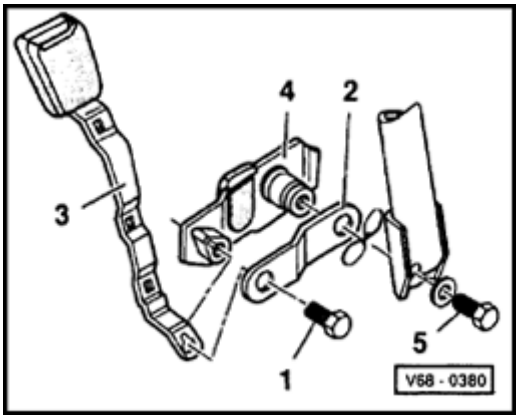

Front belt latch, removing

1 - Bolt 60 Nm (44 ft lb)

2 - Slightly press off reinforcement plate and pull out belt latch -3-.

4 - Sliding plate

5 - Bolt 20 Nm (15 ft lb)

Note:

On seats with height adjustment, rivets are installed instead of bolts -5- .

69-10

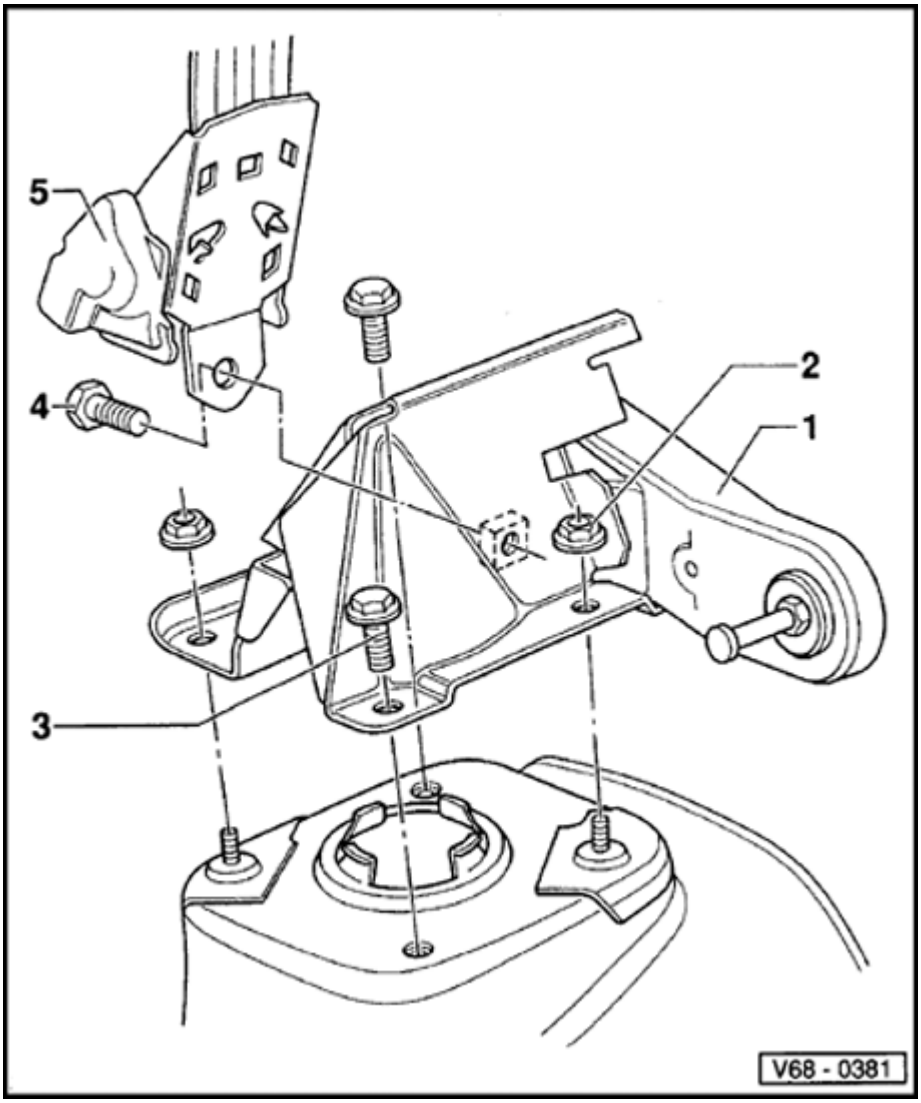

Rear belt retractor, removing and installing

1 - Mounting bracket

2 - Nut

- 23 Nm (17 ft lb)

3 - Bolt

- 23 Nm (17 ft lb)
- Mounting bolt for shock absorber.

4 - Bolt

- 40 Nm (30 ft lb)

69-11

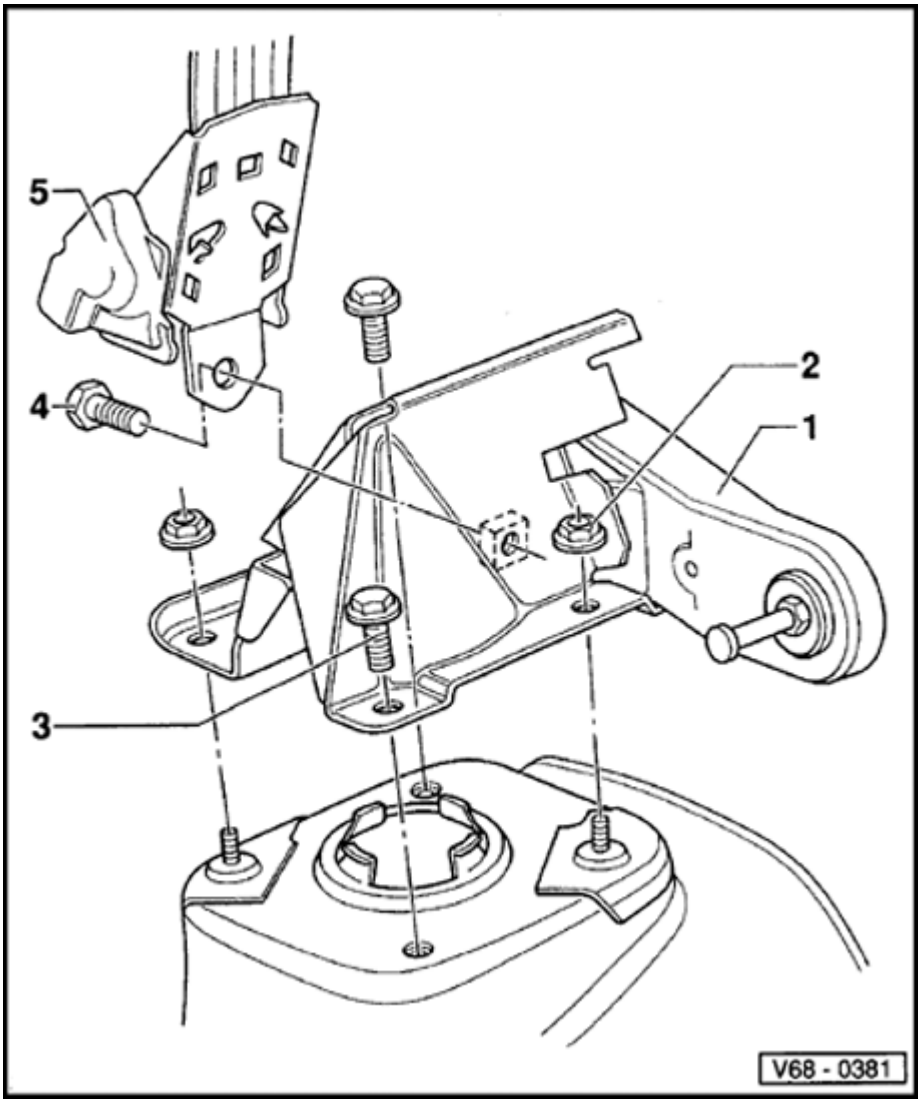

5 - Belt retractor

- Removing (sedan): Remove belt guide and belt cover ⇒ Page 70-48 , remove bolt from luggage compartment.
- Removing (wagon): Remove belt guide, belt cover, rear luggage area trim and pull off from wheel well ⇒ Page 70-51 .
- Installing: Locate belt retractor with pin in mounting bracket.

69-12

LATCH System Lower Anchors and Tethers for CHildren , installing and retrofitting (Sedan)

The LATCH system for "Lower Anchors and Tethers for CHildren" consists of the combination of rear upper tethers and rear lower anchors used to secure a child restraint.

Rear top tether

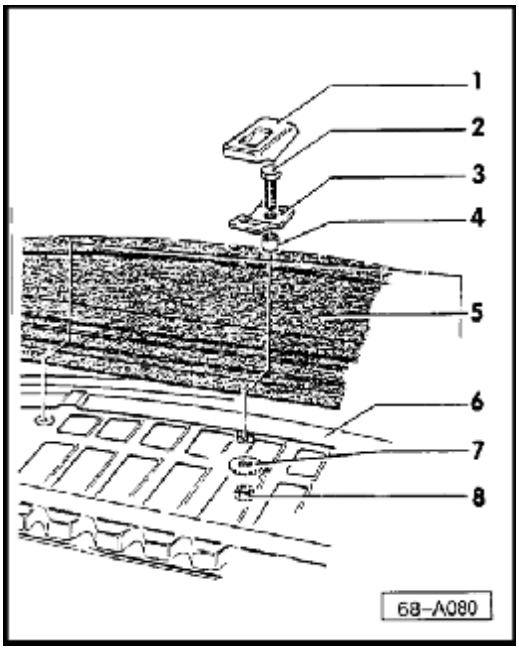

Installing:

- Open rear lid
- Locate pre-drilled hole in rear filler panel sheet metal.
- Punch locating hole in rear filler trim panel from below.
- Enlarge locating hole to 20 mm (25/32 in.) dia.
- Install anchor components
- Tighten nut to 23 Nm (17 ft lb)

Rear lower anchor

Note:

This vehicle is not equipped with rear lower anchors.

69-13

LATCH System Lower Anchors and Tethers for CHildren , installing and retrofitting (Wagon)

The LATCH system for "Lower Anchors and Tethers for CHildren" consists of the combination of rear upper tethers and rear lower anchors used to secure a child restraint.

Rear top tether

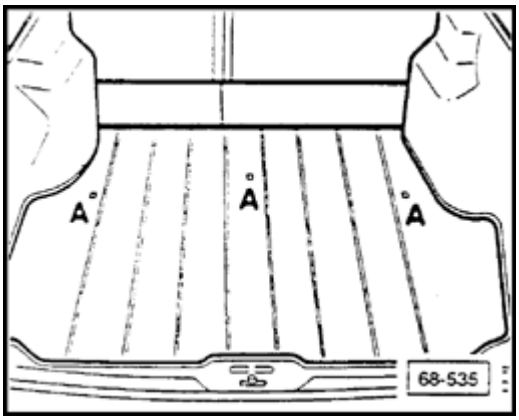

There are 3 fastening eyes located at points -A- in the luggage compartment floor. The eyes are accessible through small flaps in the floor covering.

Rear lower anchor

Note:

This vehicle is not equipped with rear lower anchors.

Front belt tensioning unit, deploying (disposal)

WARNING!

- ***It is dangerous to scrap an unignited gas generator.***

- ***The belt tensioner unit gas generator must be made unusable before scrapping. This is important because the gas generator is a pyrotechnic device that can cause injury if activated improperly (for instance when using a cutting torch).***

- Remove seat belt with belt tensioning unit ⇒ Page 69-5

Use J-44210 Deployment Fixture and refer to the Airbag Pyrotechnic Deployment Device Instruction Booklet for proper deployment procedure.

Seat belts, inspecting

CAUTION!

After every accident, the seatbelt system must be inspected thoroughly. If you find any damage according to the following check points, the customer must be informed about the need to have the affected belt(s) replaced.

Check points:

- Check webbing of belt
- Check inertial reel (locking effect)
- Visually check belt lock
- Check belt lock function
- Check belt guides and lock tongue
- Check securing parts and anchorage points.
- Check lap belt automatic retractor.

Note:

If the customer refuses to have damaged seat belt system parts replaced, make appropriate notes on the customer s invoice.

69-16

Belt webbing, checking

- Pull belt completely out of inertia reel or belt adjustment tongue.

- Check belt for dirt, if necessary wash with mild soap solution⇒ also owner s manual.

  - If either of the following damages (1 and 2) are found on an accident vehicle, replace belt complete with belt lock.

  - If damages as shown under points 1, 2, or 3 are found on a vehicle not involved in an accident, it is sufficient to just replace the affected belt.

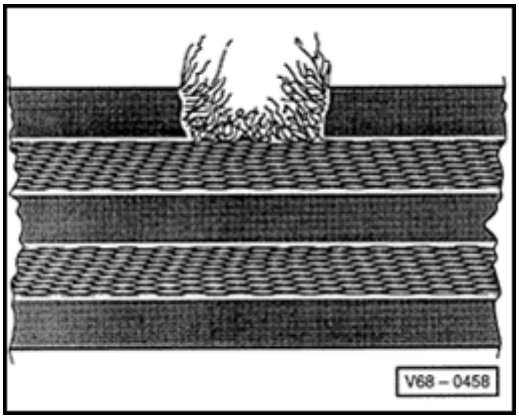

1 - Belt webbing cut, torn or chafed.

69-17

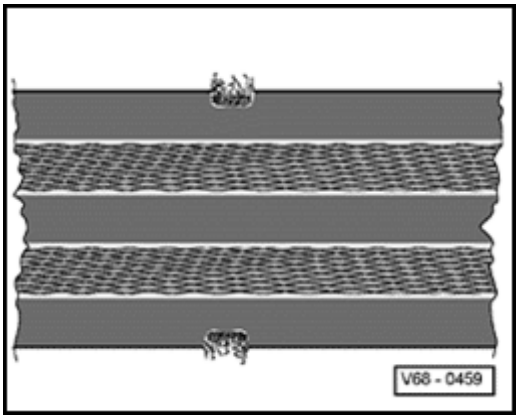

2 - Webbing loops on belt edge torn.

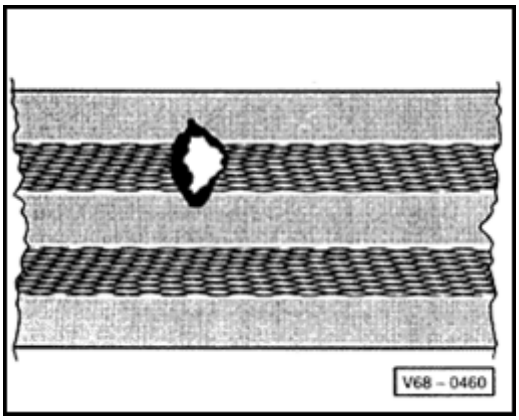

3 - Burn marks from cigarettes or similar.

69-18

Inertia reel locking effect, checking

The inertia reel has two locking functions:

- The first locking function is applied when the belt is jerked out of reel (belt extraction acceleration).

Checking

- Pull belt out of inertia reel with firm jerk.

  - If there is no locking effect, replace seat belt complete with belt latch.

  - If there are difficulties with pulling out belt or reeling it in, check first whether the position of the inertia reel was changed.

- The second locking function is applied by changes in the vehicle movement (vehicle-dependent locking function).

Checking

- Fasten seat belt.

CAUTION!

Perform road test only on traffic-free road to be sure not to endanger other motorists or pedestrians.

- Accelerate vehicle to 20 km/h (12 mph) and then step hard on foot brake.

  - If the belt is not locked when braking, replace seat belt complete with belt latch.

Belt latch, visually checking

- Check belt latch for cracks or other damage.

  - If damaged, replace complete safety belt with belt latch.

Belt latch, functionally checking

Latch mechanism, checking:

- Push locking tongue into belt latch until it engages with a click. Pull firmly on belt to be sure that locking mechanism is properly engaged.

  - If belt tongue fails even once when checking 5 times, replace complete safety belt and latch.

Release mechanism, checking:

- Release seat belt by pressing button on belt latch with finger pressure.

  When belt is slack, locking tongue must spring out of latch on its own.

  - Perform test at least 5 times. If belt tongue fails even once to spring out of latch, replace complete seat belt with latch.

CAUTION!

Never use lubricants to eliminate noise or stiffness at belt latch buttons.

Belt guides and locking tongues, checking

Plastic covered guides show fine scoring after an accident when belt was worn. Wear caused by frequent belt use are smooth wear signs without scoring.

- Inspect for deformation, breakage or cracks in plastic.

  - If you find scoring or other damage, replace complete seat belt and latch.

Securing parts and anchorage points, checking

- Latch bracket deformed (stretched).
- Height adjustment does not work.
- Anchorage points (seat, pillar, vehicle floor) distorted or thread damage.

- If on any of these parts are damaged, replace safety belt complete with latch.
- Replace anchorage points.

Note:

Only replace damaged parts if damage was caused by wear and not by an accident.

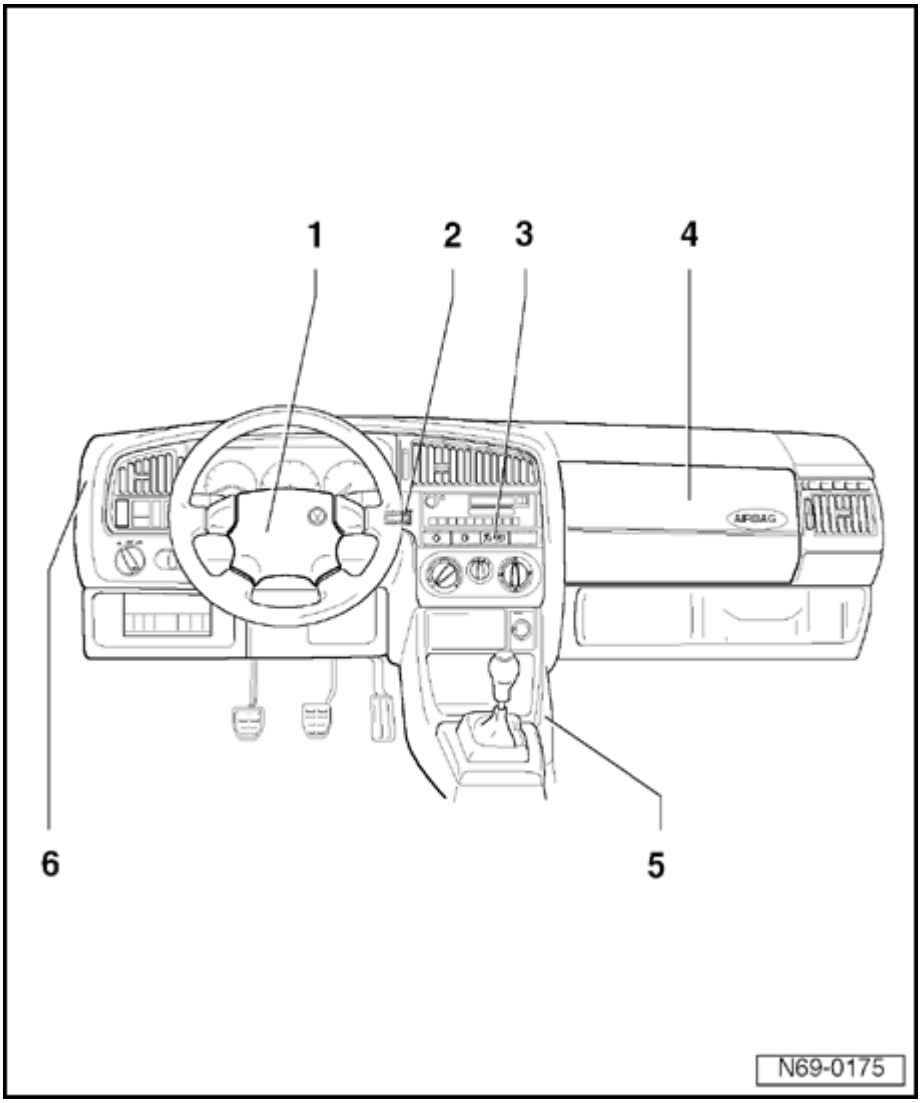

Airbag

Airbag system, components

1 - Airbag unit, driver s side

- Removing and installing ⇒ Page 69-26

2 - Data Link Connector (DLC)

3 - Airbag Malfunction Indicator Lamp (MIL) - K75-

4 - Airbag unit, passenger s side

- Removing and installing ⇒ Page 69-31

5 - Airbag Control Module - 234- mounted on tunnel

- Removing and installing ⇒ Page 69-35

6 - Central Ground point (behind instrument panel)

69-23

Safety precautions when working on the airbag system

WARNING!

- ***Testing, removing, installing and repair work must only be performed by qualified, trained Service department personnel.***
- ***Never use test lamp, voltmeter or ohmmeter for testing.***
- ***Always disconnect the battery Ground (GND) strap before working on the airbag system.***
- ***No waiting time is ncessary after disconnecting the battery.***
- ***When connecting the airbag system to battery positive voltage (B), there must be no person inside the vehicle.***
- ***A technician must be electrostatically discharged before picking up (touching) an airbag unit . This is accomplished by touching a suitable metal part, for example, a water pipe, a heating pipe or a metal frame.***
- ***Install a new airbag unit in the vehicle as soon as the unit is removed from the packaging. If the work is interrupted, place the airbag unit back in its packaging.***
- ***Do not leave an undeployed airbag unit unattended if work is interrupted.***
- ***Always place an airbag unit that has been removed from its packaging with the padded side facing upward.***

69-24

CAUTION!

- ***Airbag units which have dropped onto a hard surface or show signs of damage must not be installed in the vehicle.***
- ***Airbag units which have not been activated should be marked and returned to the manufacturer for disposal (use airbag unit transport container).***
- ***Airbag units that have not been activated should be marked and sent back to the Warranty Test Center for disposal. (use airbag unit parts container for shipping).***
- ***Always replace any airbag system component that has been mechanically damaged (example: dented or cracked).***
- ***The storage and transportation of airbag units must comply with the regulations for explosive substances.***
- ***Only install original seat covers that have been authori ed for use with side airbags (recogni able by AIRBAG label).***
- ***Do not install commercially available loose fitting seat covers.***
- ***When installing a backrest cover ensure that the cover seam is straight in the area of the side airbag.***
- ***Replace all seat cover clips.***
- ***Only use original seat cover clips.***
- ***For safety reasons always replace the seat cover if it is damaged in area of the side airbag, e.g. torn, burn holes, etc.***

69-25

Airbag units, replacing after an accident.

Accident with activated airbag

The following must be replaced:

- All activated airbag units with control modules and sensors.
- Support for passenger s airbag.
- Airbag Spiral Spring -F138-.
- All safety belts with activated belt tensioners.
- If necessary, replace all other components that show visual damage.

Accident without activated airbag

- If the Airbag MIL -K75- does not indicate a malfunction, no replacement of an airbag is necessary. Check safety belts separately.

After replacing airbag units or control module, affix stickers (only tear-off strips) to the registration card and return registration card to the Warranty Test Center for registration.

Registration card 000 010 227 C must be ordered separately.

69-26

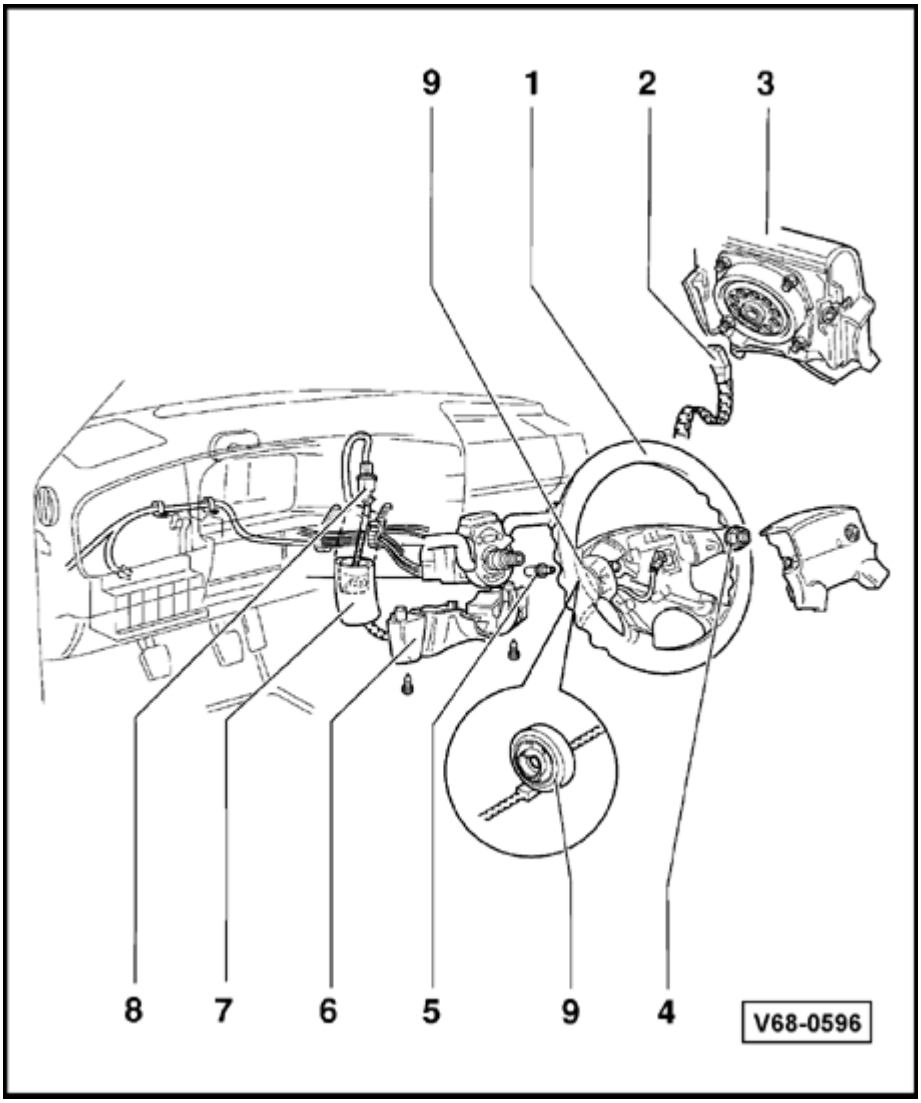

Driver s airbag unit, removing and installing

WARNING!

Observe all safety precautions before starting work on any part of airbag system ⇒ *page 9- 3*

1 - Steering wheel

2 - Airbag unit connector

3 - Airbag unit

4 - 50 Nm (37 ft lb)

5 - Socket-head bolt

- 6.5 Nm (57 in. lb)
- Always replace

6 - Lower trim

7 - Foam tube

8 - Connector

9 - Airbag Spiral Spring - F138-

69-27

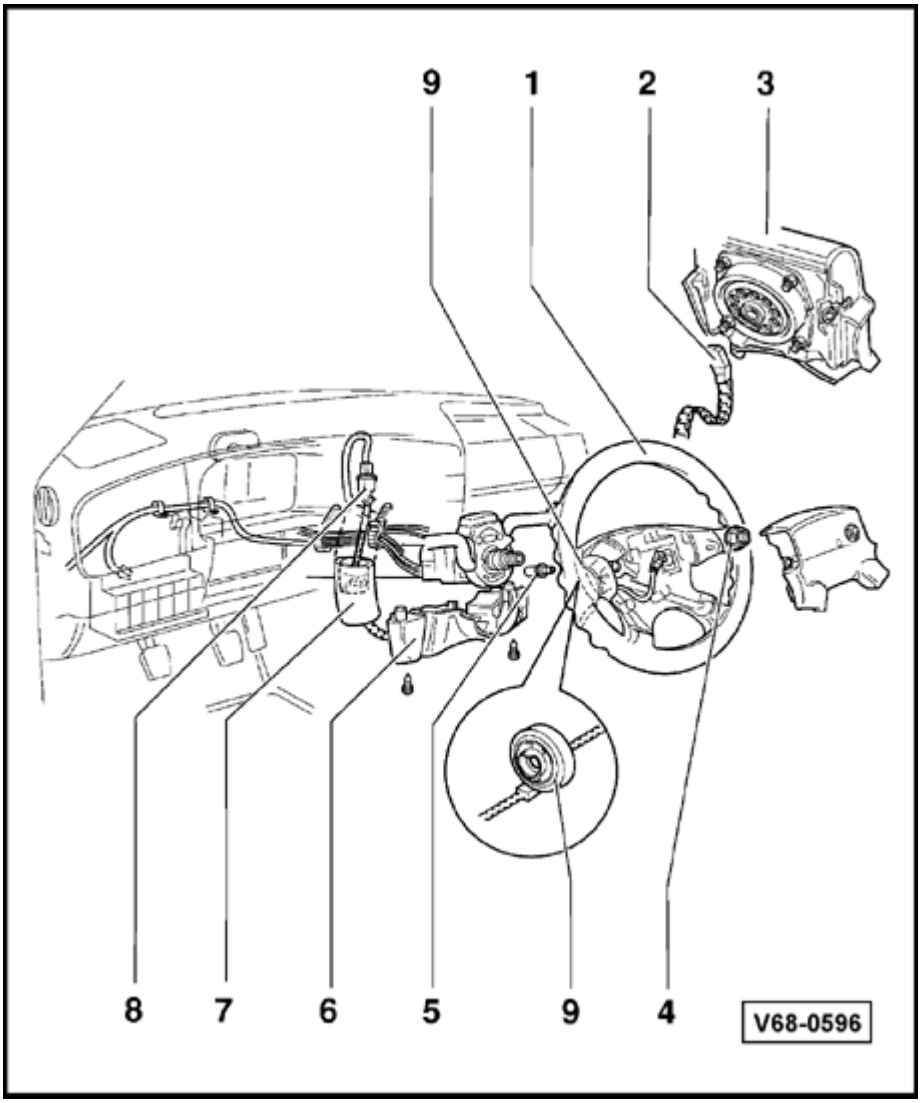

CAUTION!

- ***Obtain radio anti-theft code.***
- ***Before working on the electrical system, disconnect battery ground cable.***

Removing

Notes:

- *Before disconnecting radio, obtain anti-theft code.*
- *After reconnecting the battery, reconnect and adjust radio, clock, and power windows according to repair manual or owner s manual instructions.*

- Disconnect battery ground cable.
- Place steering wheel -1- in straight ahead position (wheels in straight ahead position).

69-28

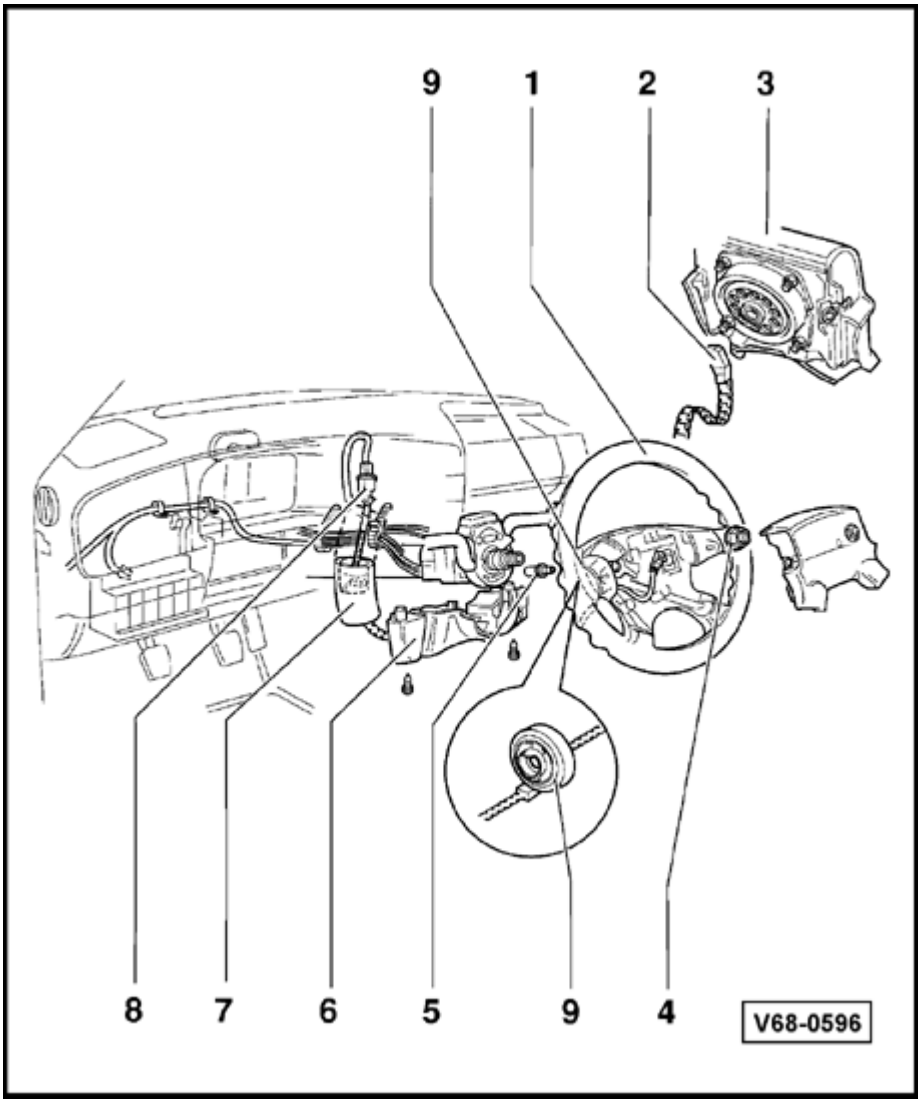

- Remove socket-head bolts -5-. Remove airbag unit -3- from steering wheel and disconnect red connector -2- from airbag unit.

Installing

Installation is in reverse order of removal.

- Switch ignition on.

CAUTION!

Be sure no person remains inside the vehicle.

- Reconnect battery ground cable.

69-29

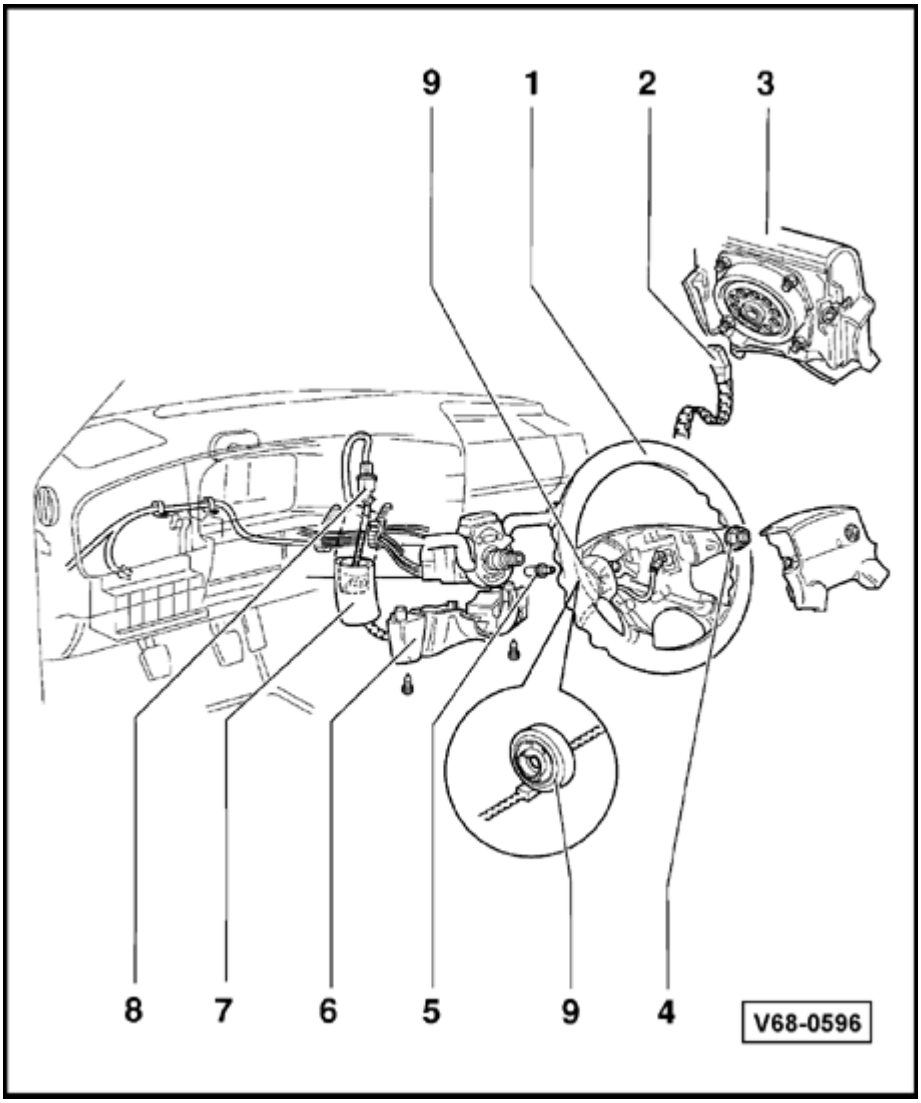

Steering wheel, removing and installing

Driver s side airbag unit is removed.

- Remove lower trim -6- for steering column switch.
- Remove foam tube -7- for connector -8- and disconnect connector.
- Remove nut -4- and pull off steering wheel from steering column. Nut 50 Nm (37 ft lb)

Airbag Spiral Spring -F138- -9- remains on steering wheel.

69-30

Airbag Spiral Spring -F138-, removing and installing

Driver s airbag unit and steering wheel removed.

- Disconnect connector for horn.

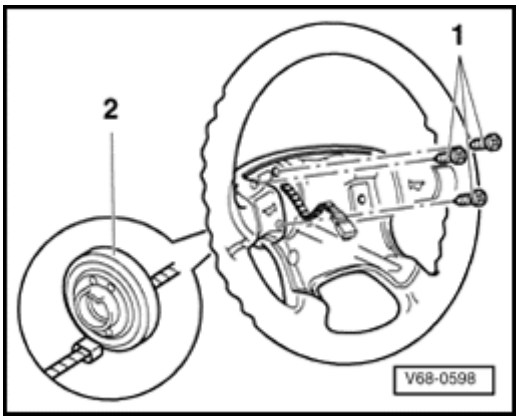

- Remove screws -1- and remove Airbag Spiral Spring -2- from steering wheel.

Notes:

- *Removing and installing of the Airbag Spiral Spring must be performed with front wheels in straight-ahead position.*
- *A new Airbag Spiral Spring is secured in center position with a tie wrap.*

69-31

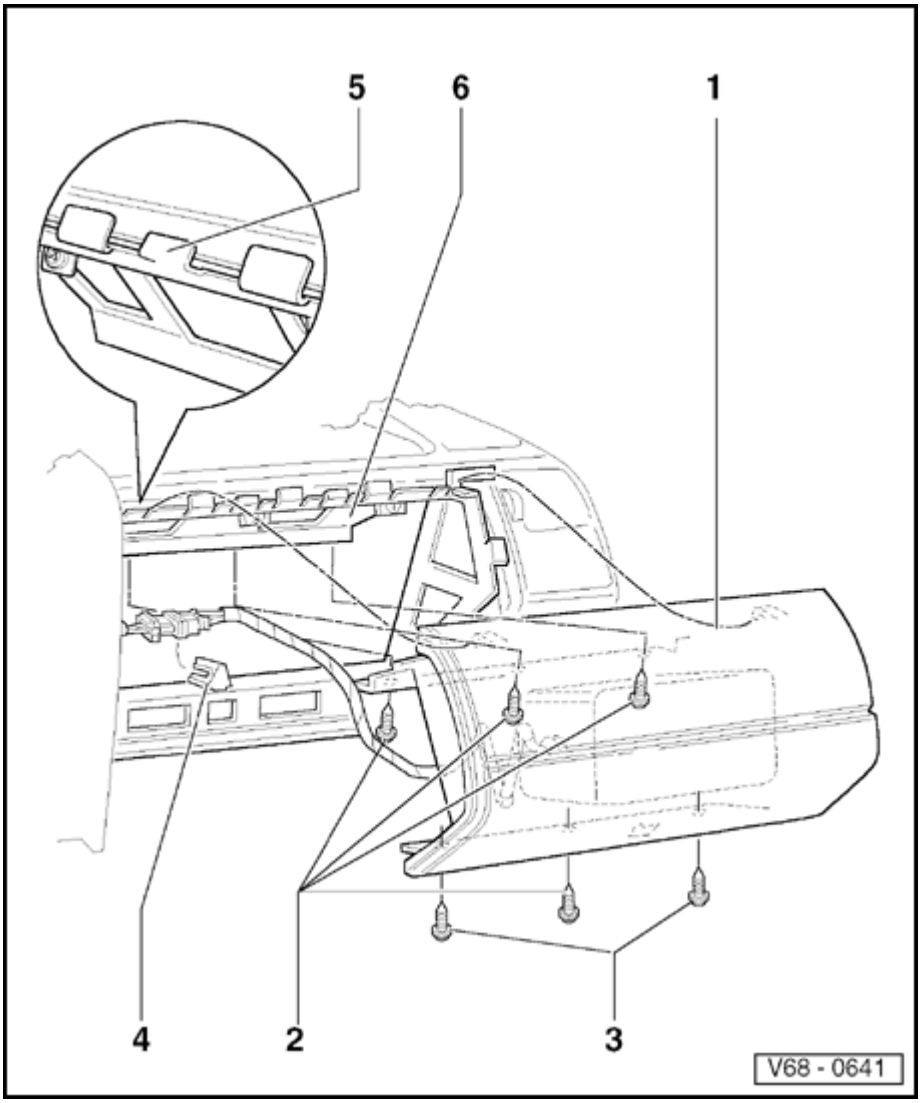

Passenger s side airbag unit, removing and installing

1 - Airbag unit

- Removing ⇒ Page 69-32

2 - Screws

- 1.5 Nm (13 in. lb)

3 - Screws

- 1.5 Nm (13 in. lb)

4 - Cable clip

5 - Retaining tabs (4x)

6 - Retaining frame

- Removing ⇒ Page 69-34

69-32

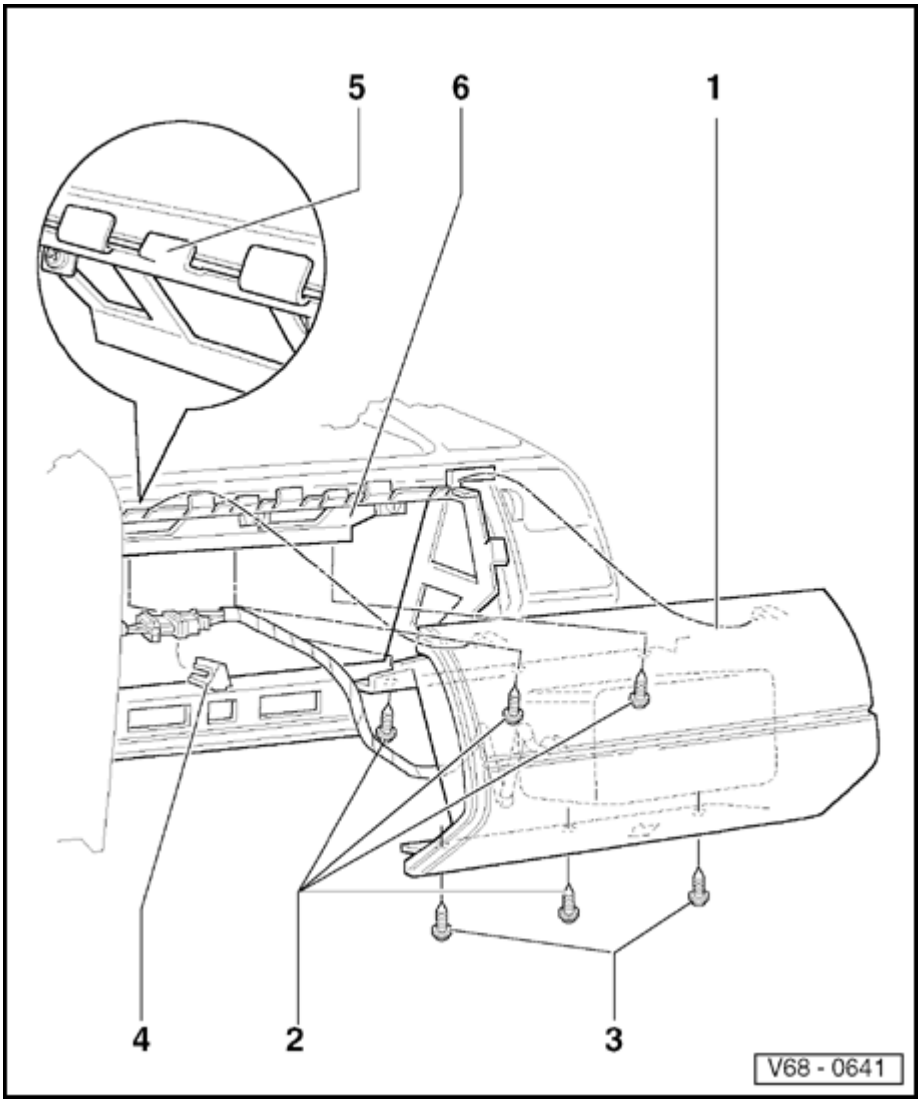

CAUTION!

- ***Obtain radio anti-theft code.***
- ***Before working on the electrical system, disconnect battery ground cable.***

Removing

Notes:

- *Before disconnecting radio, obtain anti-theft code.*
- *After reconnecting the battery reconnect and adjust radio, clock, and power windows according to repair manual or owner s manual instructions.*

- Disconnect battery ground cable.

69-33

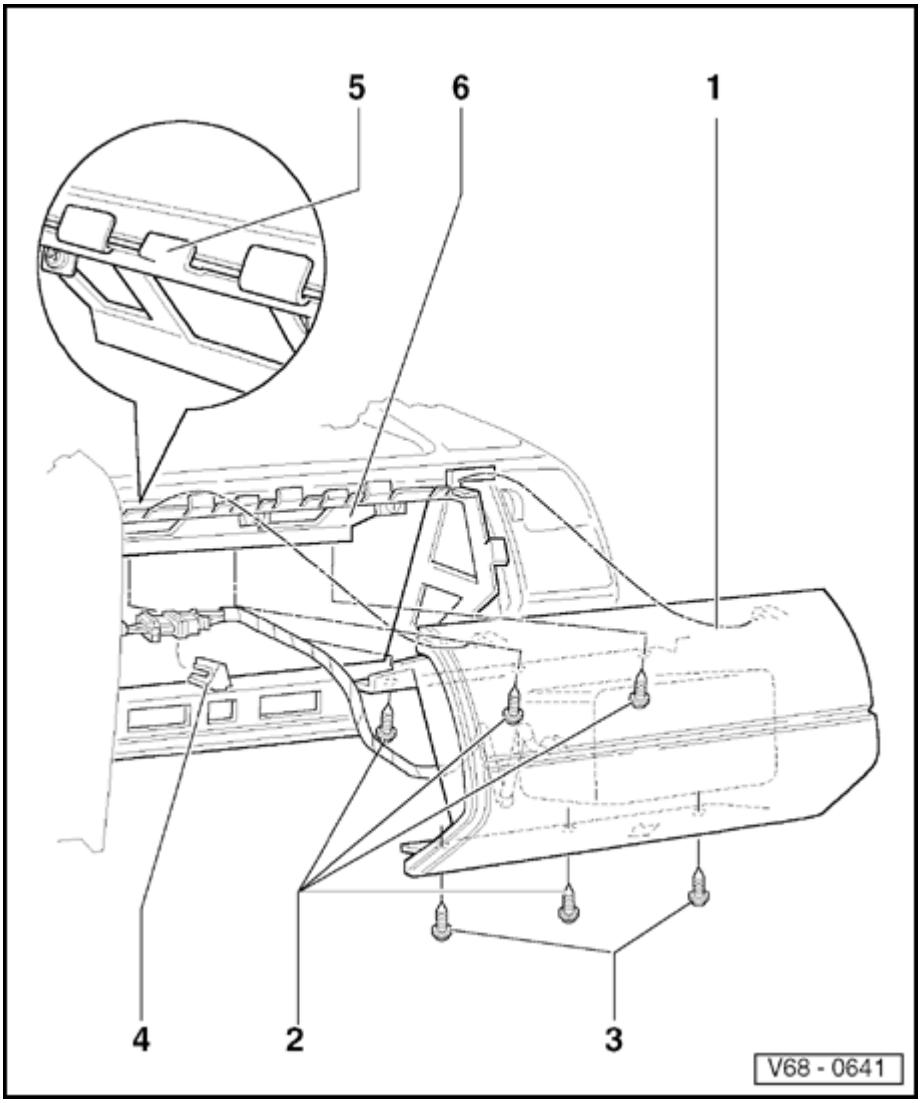

- Remove passenger s side storage shelf.
- Remove screws -2- and -3-.
- Tilt airbag unit from instrument panel and remove from retaining tabs -5-.
- Unclip connector from bracket -4-and disconnect.

Installing

Installation is in reverse order of removal.

- Switch ignition on.

CAUTION!

Be sure no person remains in the inside of the vehicle.

- Connect battery ground cable.

69-34

Retaining frame, removing

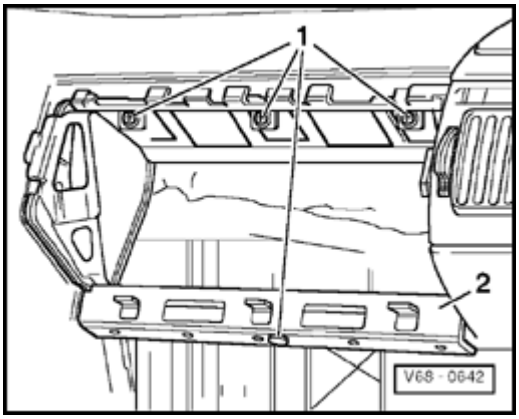

- Remove screws -1-.
- Remove retaining frame -2-.

69-35

Airbag Control Module - 234-, removing and installing

Note:

Before removing the control module disconnect the battery ground cable.

- Remove center console ⇒ Page 70-8 .
- Remove footwell air outlet *Repair Manual, Heating & Air Conditioning, Repair Group 80* .
- If necessary, cut carpet and dampening material in area of bracket for control module.

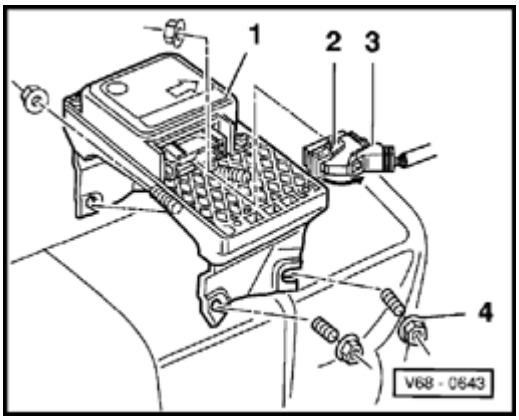

- Move retaining clip -2- in direction of arrow and remove connector -3- from control module.
- Remove nuts -4- and pull control module and bracket off of threaded stud. Nut -4- = 20 Nm (15 ft lb).

Airbag units, deploying (disposal)

WARNING!

DO NOT ignite airbag units in vehicles.

According to regulations, airbag units must be rendered unusable by igniting them electrically before scrapping the vehicle. This is necessary because the airbag unit is a pyrotechnic device that may cause injuries if activated in an improper manner (e.g. using a cutting torch).

- Remove airbag unit ⇒ Page 69-26

Use J-44210 Deployment Fixture and refer to the Airbag Pyrotechnic Deployment Device Instruction Booklet for proper deployment procedure.

Instrument panel, removing and installing

WARNING!

Before working on the electrical system, disconnect the battery ground cable.

Removing

Note:

Before disconnecting the battery, obtain radio anti-theft code.

- Remove battery ground cable.
- Remove radio.
- Remove driver s side airbag unit, ⇒ Page 69-26 .
- Remove passenger s side airbag unit, ⇒ Page 69-31 .
- Remove kneebar, ⇒ Page 70-5 .
- Remove center console, ⇒ Page 70-8 .
- Remove driver s side storage shelf, ⇒ Page 70-11 .
- Remove passenger s side storage shelf, ⇒ Page 70-11 .

70-2

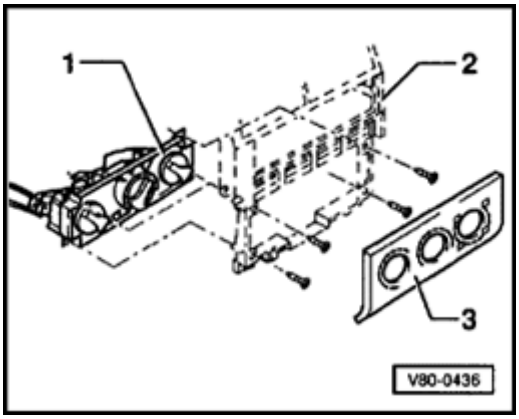

- Remove heater control panel -3- and remove screws -2- from instrument panel.
- Press control panel -1- with attached cables below instrument panel.

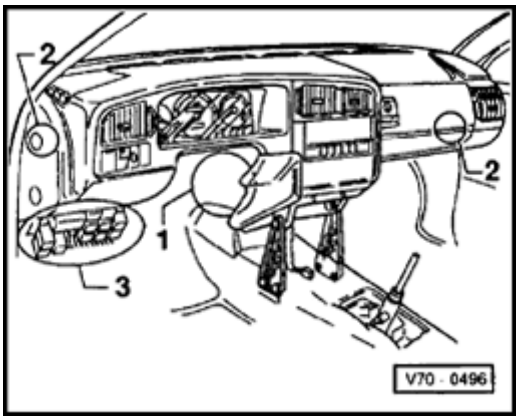

- Drill out shear bolts of steering column and lower steering column.
- Disconnect harness connector -1-.
- Disconnect ground wires at left and right instrument panel -2-.
- Only remove connectors at central electric -3- that are attached to instrument panel wiring harness.

Note:

Do not open retainers of instrument panel wiring harness.

70-3

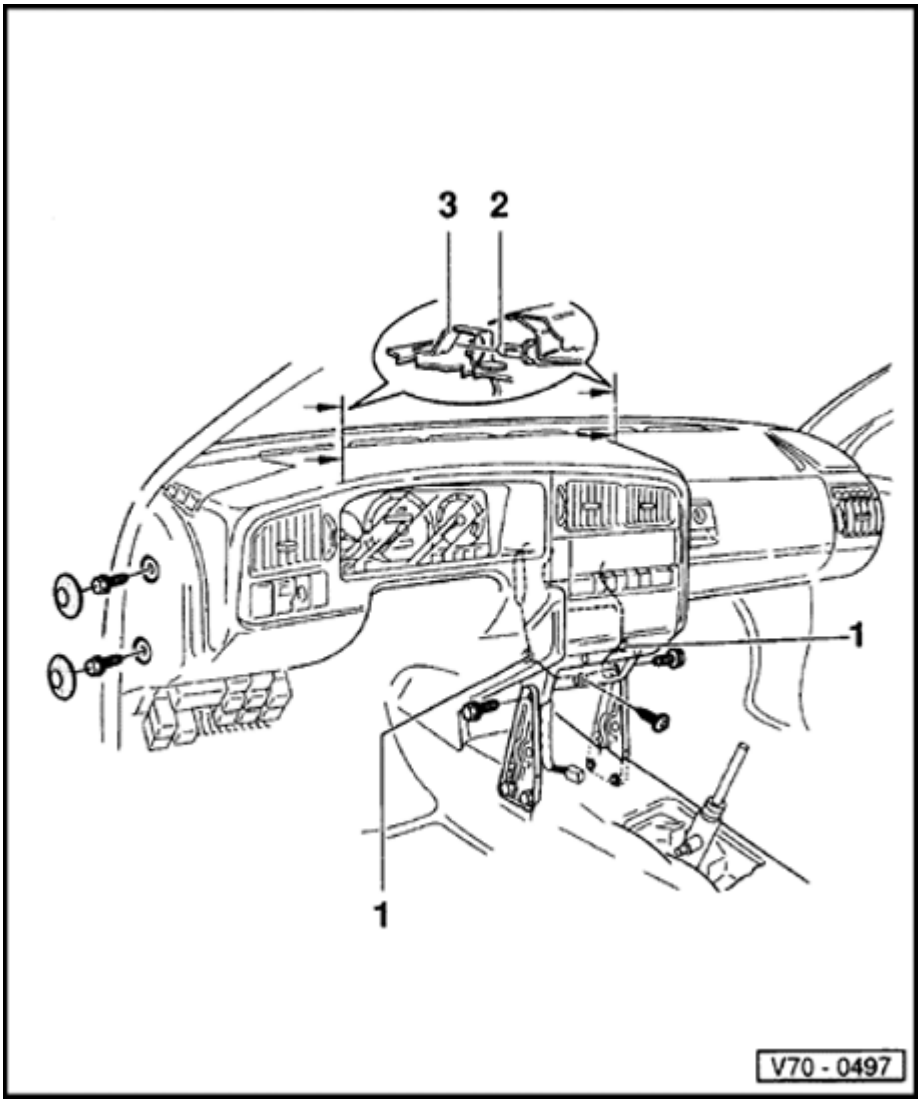

- Remove cover caps and remove screws.
- Pull out clip retainers -1- at air intake housing.
- Remove front screws on supports, loosen rear screws and fold back supports.
- Carefully remove instrument panel.

Installing

- Disengage speedometer drive in plenum chamber (speedometer drive cable is only pushed into instrument).
- Push instrument panel with retaining pins -2- into mounting brackets -3-.
- Check seating of air ducts at heater housing.
- Install speedometer drive cable.

⇒ Repair Manual, Electrical System; Repair Group 90

70-4

Notes:

- *After re-connecting the battery be sure to adjust radio, clock and power windows according to instructions in the repair manual or owner s manual.*
- *If the Airbag MIL - 75- comes on, erase DTC memory using Scan Tool VAG1551 and check DTC memory again.*

70-5

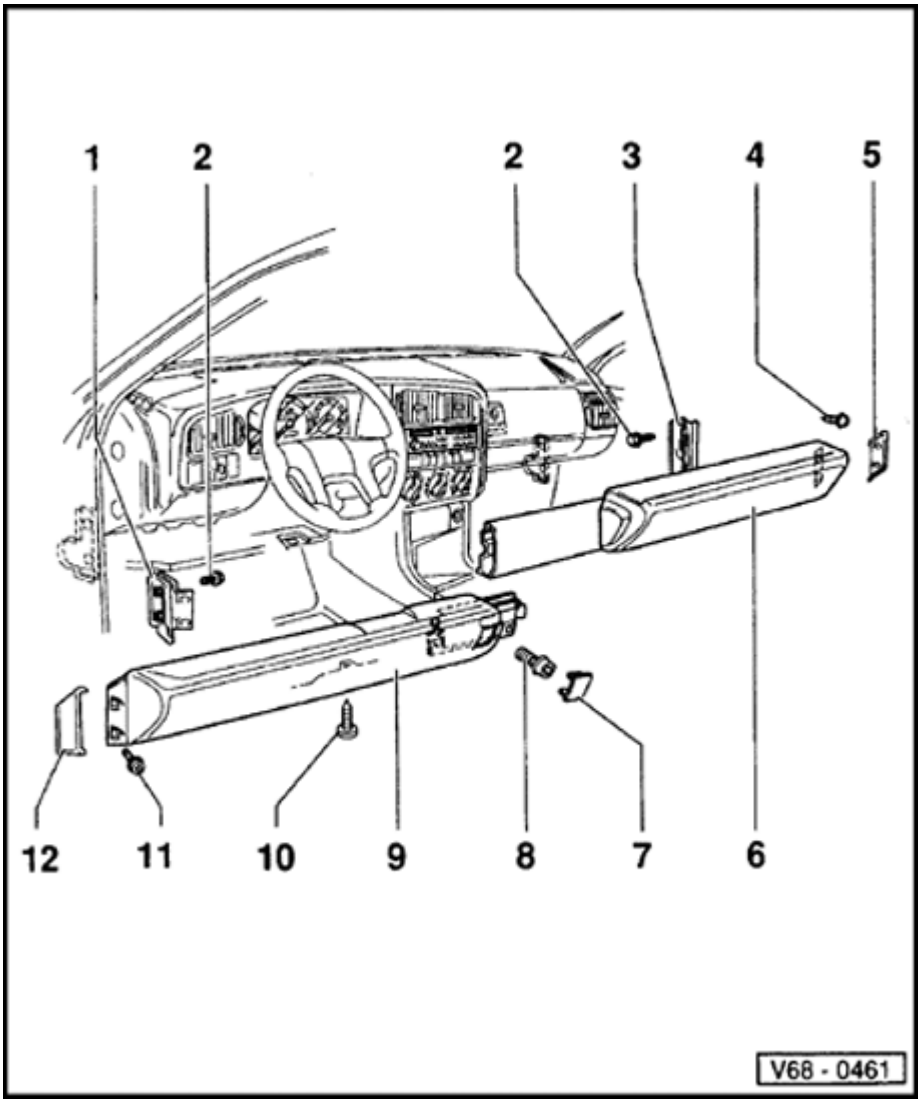

Knee bar, removing

1 - Left bracket

- To remove, remover A-pillar trim.
- Pull bracket down from A-pillar.

2 - Bolt

- 10 Nm (7 ft lb)
- When installing, tighten bottom bolt first, then top bolt.

3 - Right bracket

- Remove same way as left bracket.

4 - Screw

- 10 Nm (7 ft lb)

5 - Trim

- Unclip at right angle.

70-6

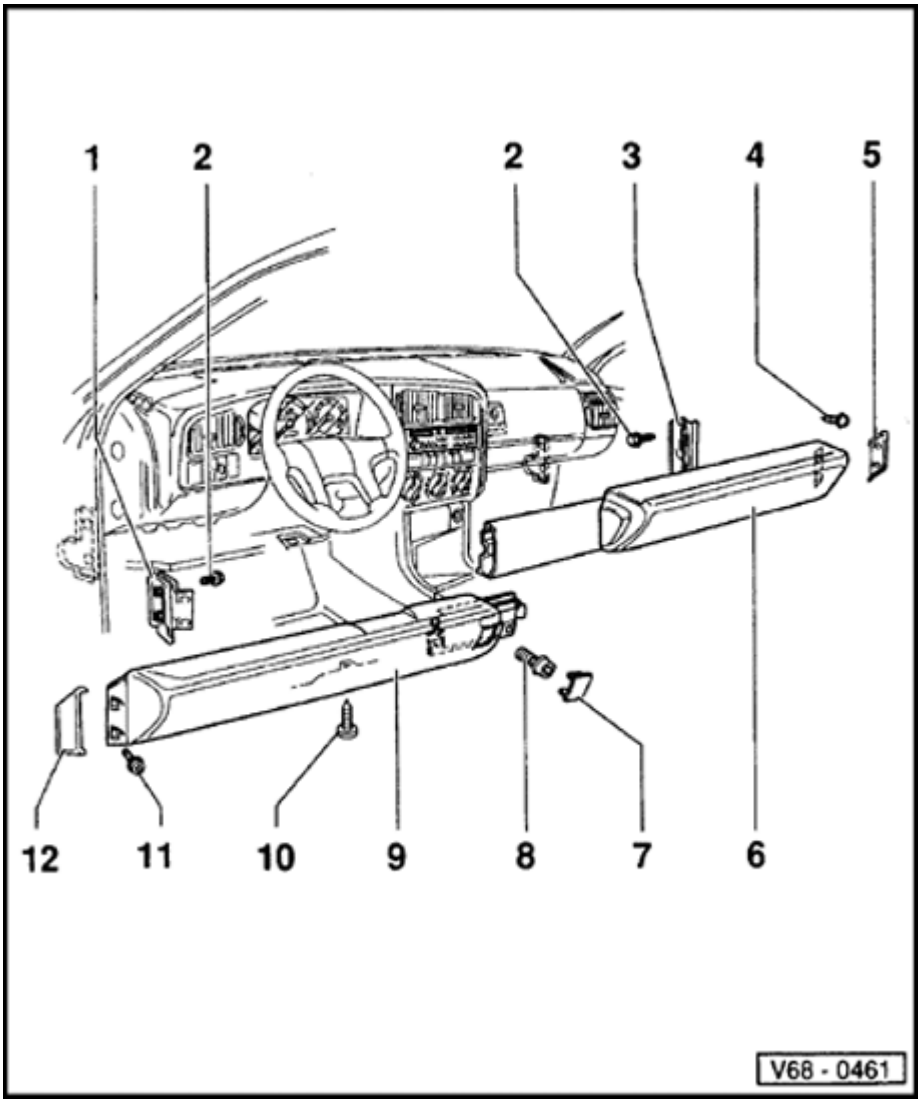

6 - Right knee bar

- To remove, remove left knee bar and lower trim of A-pillar.
- Pull out knee bar to right from behind center console.

7 - Cap

- Pry out.

8 - Screw

- 10 Nm (7 ft lb)

9 - Left knee bar

- To remove, remove lower trim of A-pillar.
- Pull out knee bar to left from behind center console.

70-7

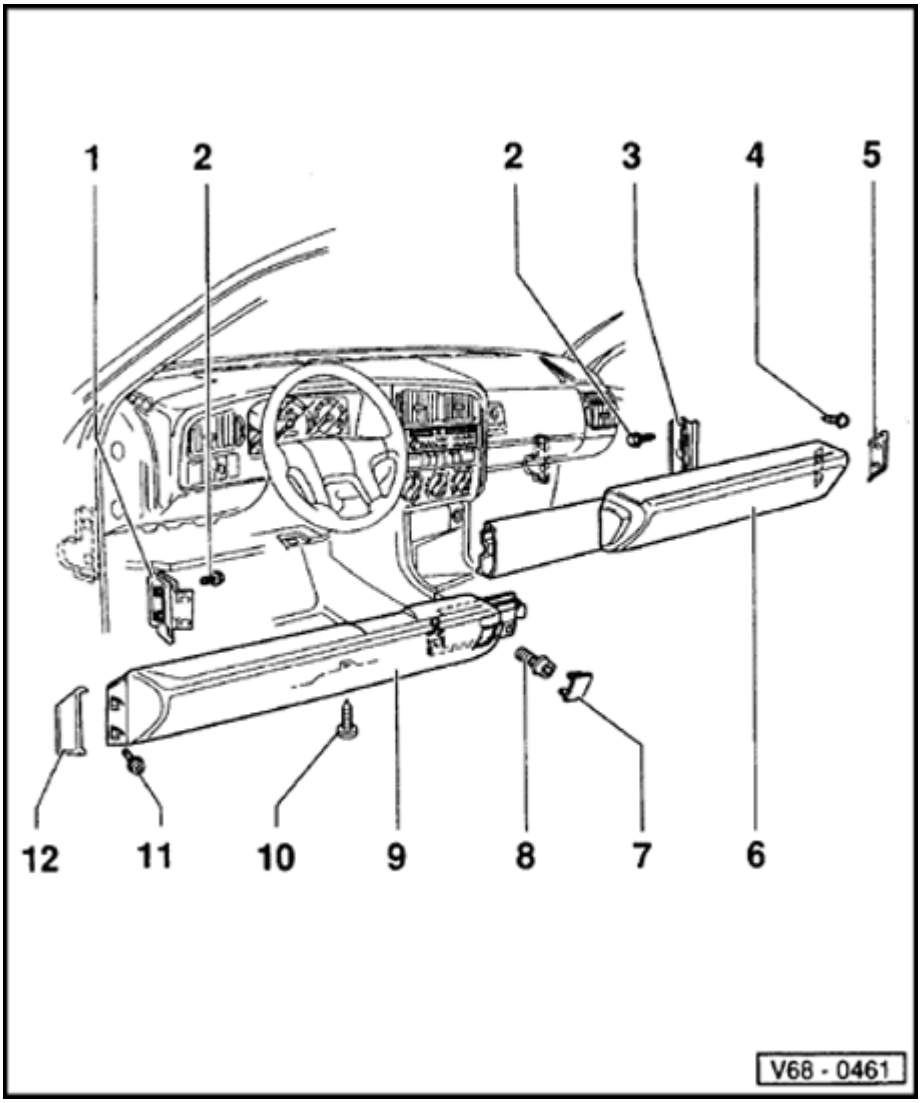

Note:

When installing knee bar be sure that wiring close to the ignition lock and steering column is properly routed.

10 - Self-tapping screw

11 - Screw

- 10 Nm (7 ft lb)

12 - Trim

- Unclip at right angle.

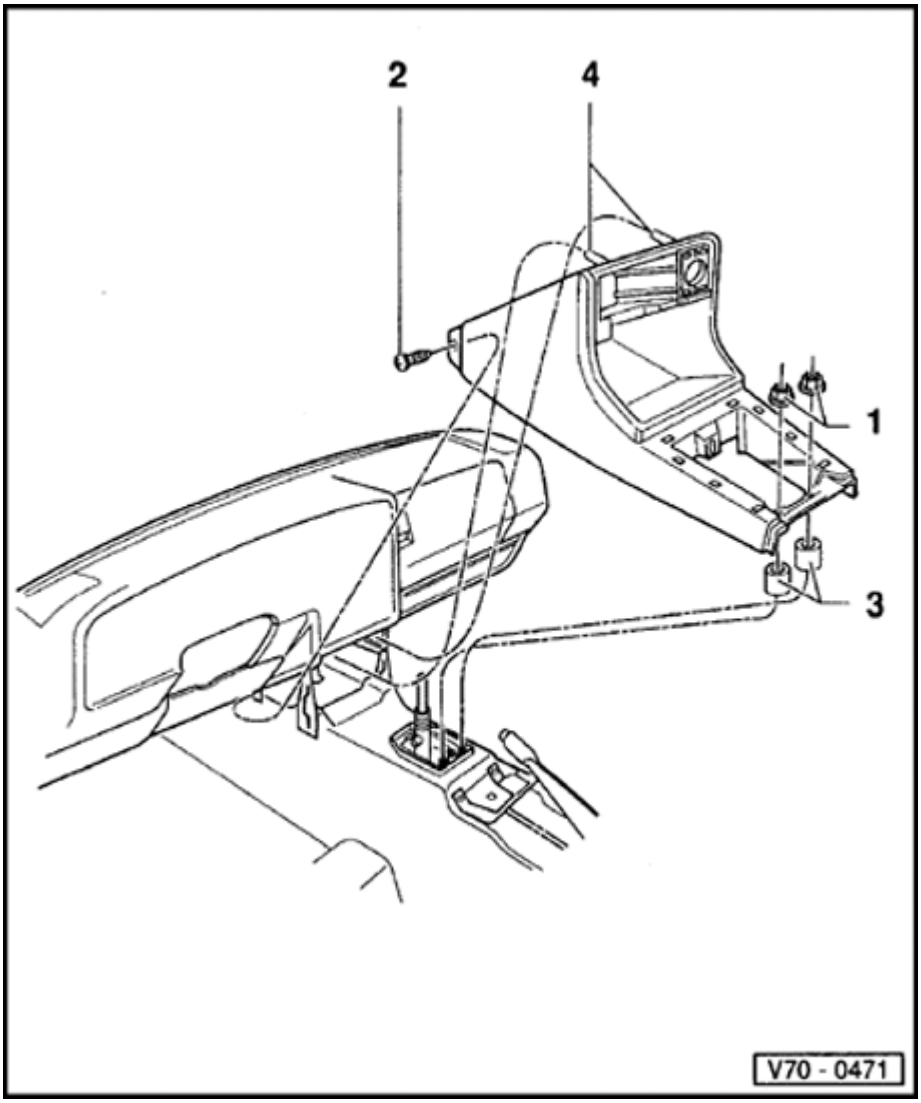

Center console, removing and installing

Removing

- Remove parking brake grip and trim for lever ⇒ Page 70-9 .
- Remove extension for center console ⇒ Page 70-10 .
- Remove bolts -1- and screws -2- (left and right).
- Slightly lift console at rear and remove toward rear.
- Disconnect electrical connectors.

Installing

- Install spacer sleeves -3- on threaded studs.
- Install center console with retaining pins -4- into instrument panel.

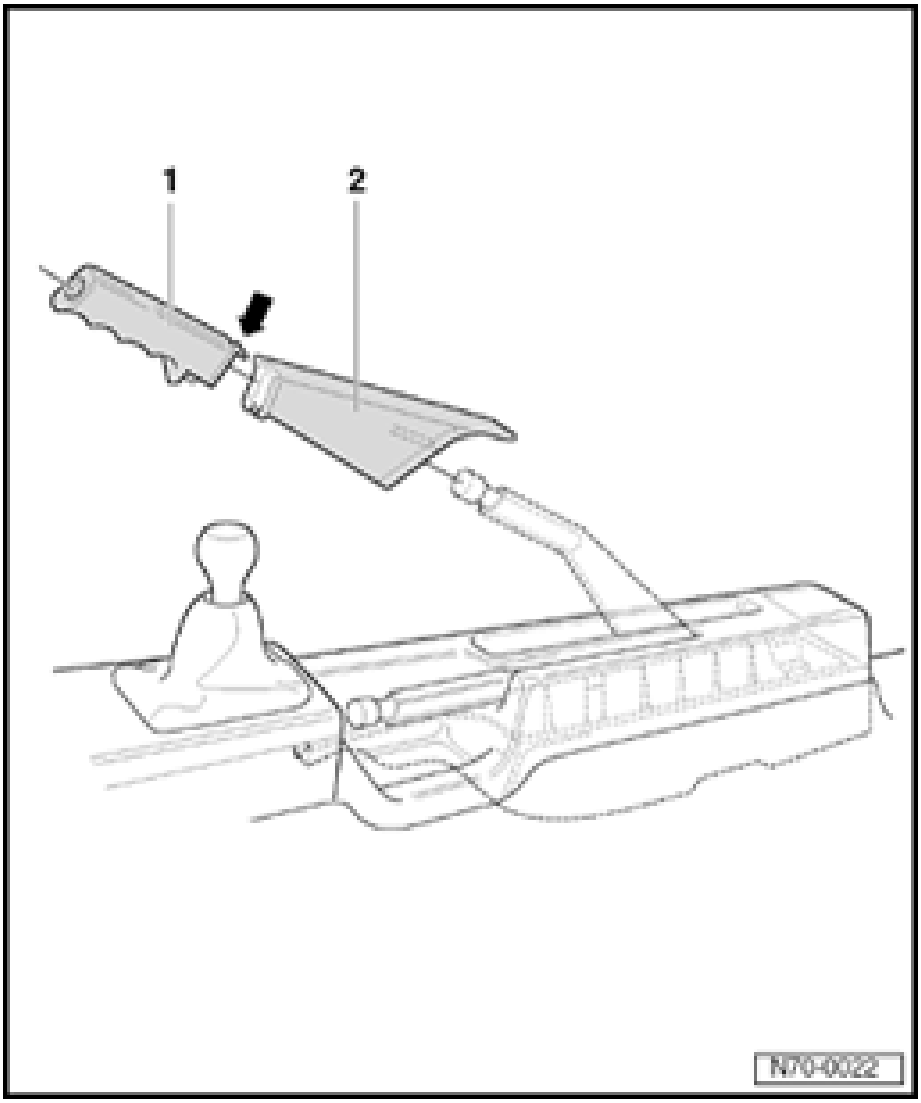

Parking brake lever grip and trim, removing.

- Pull up parking brake lever.
- Push down locking lug -arrow- with screwdriver.
- Pull off grip and trim -1- from lever.
- Pull trim -2- off parking brake lever.

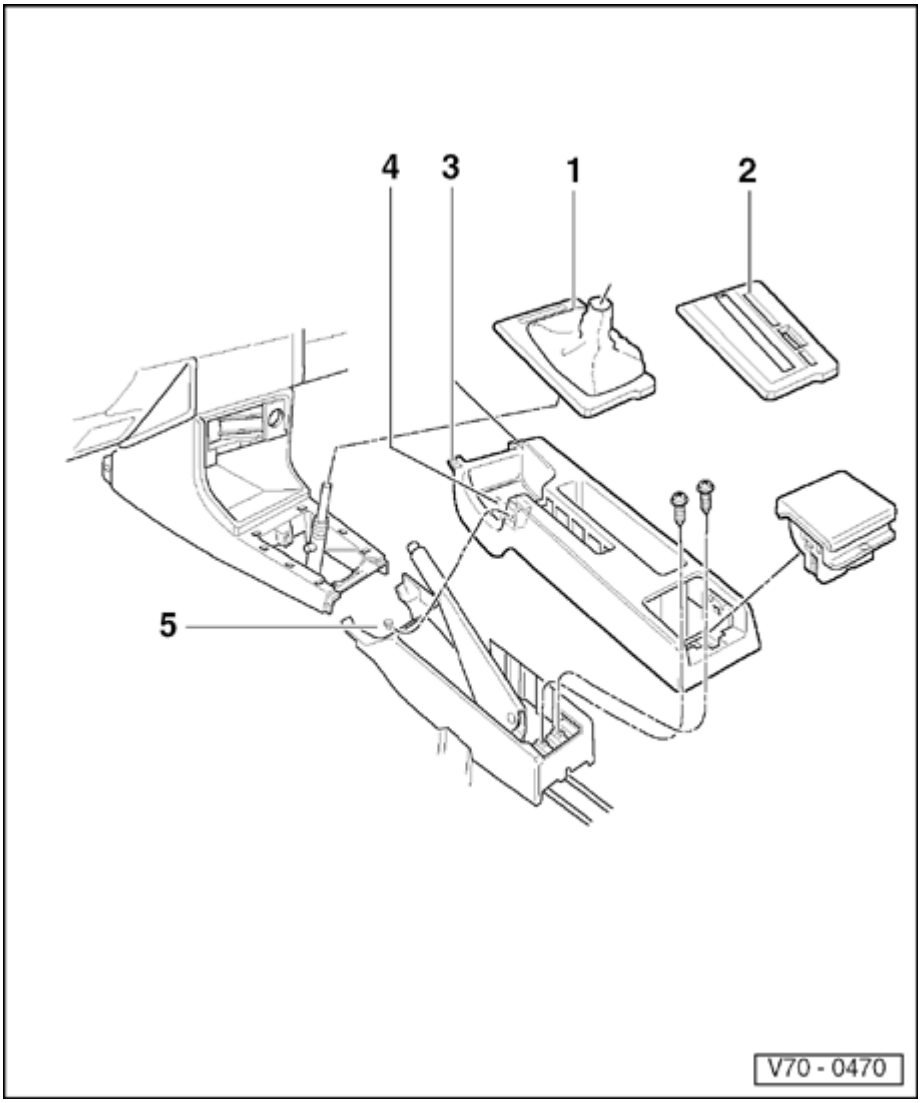

Center console extension, removing and installing

Removing

- Unclip cover for gear shift lever and remove upward.
- 1 = Manual transmission
- 2 = Automatic transmission
- Remove ash tray and remove screws.
- Disconnect ash tray light.
- Press down locking lugs -3- and remove console toward rear.

Installing

- Push console with guide -4- onto stud -5-.

70-11

Storage shelf, driver s side, removing and installing

Removing

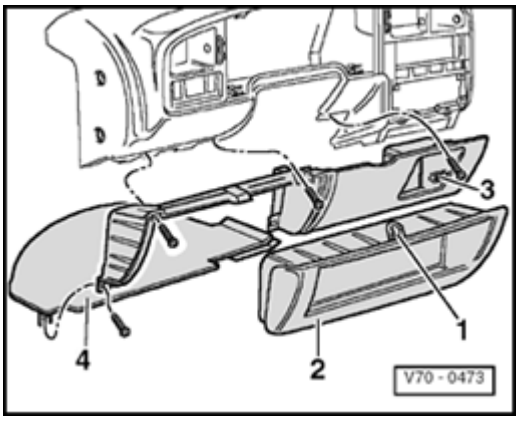

- Turn closure -1- 90° and unclip shelf -2-.
- Remove screws and remove shelf by tilting downward.

Installing

- Insert shelf first with stud -3- into instrument panel and fasten with screws to instrument panel.
- Install trim -4- to stop into storage shelf.
- Fasten trim and storage shelf to A-pillar with screws.

Storage shelf, passenger s side, removing

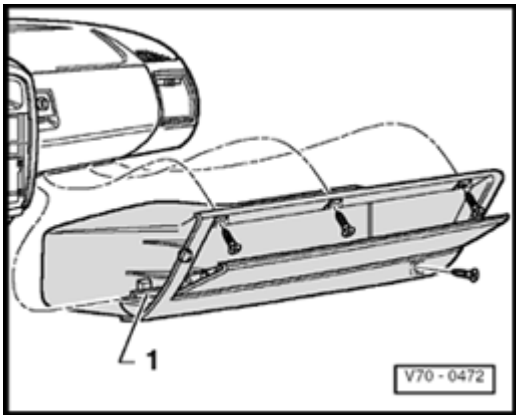

- Remove screws and remove shelf by tilting downward. Observe pin -1-.

Depending on the vehicle, the storage shelf may be provided with or without a cover.

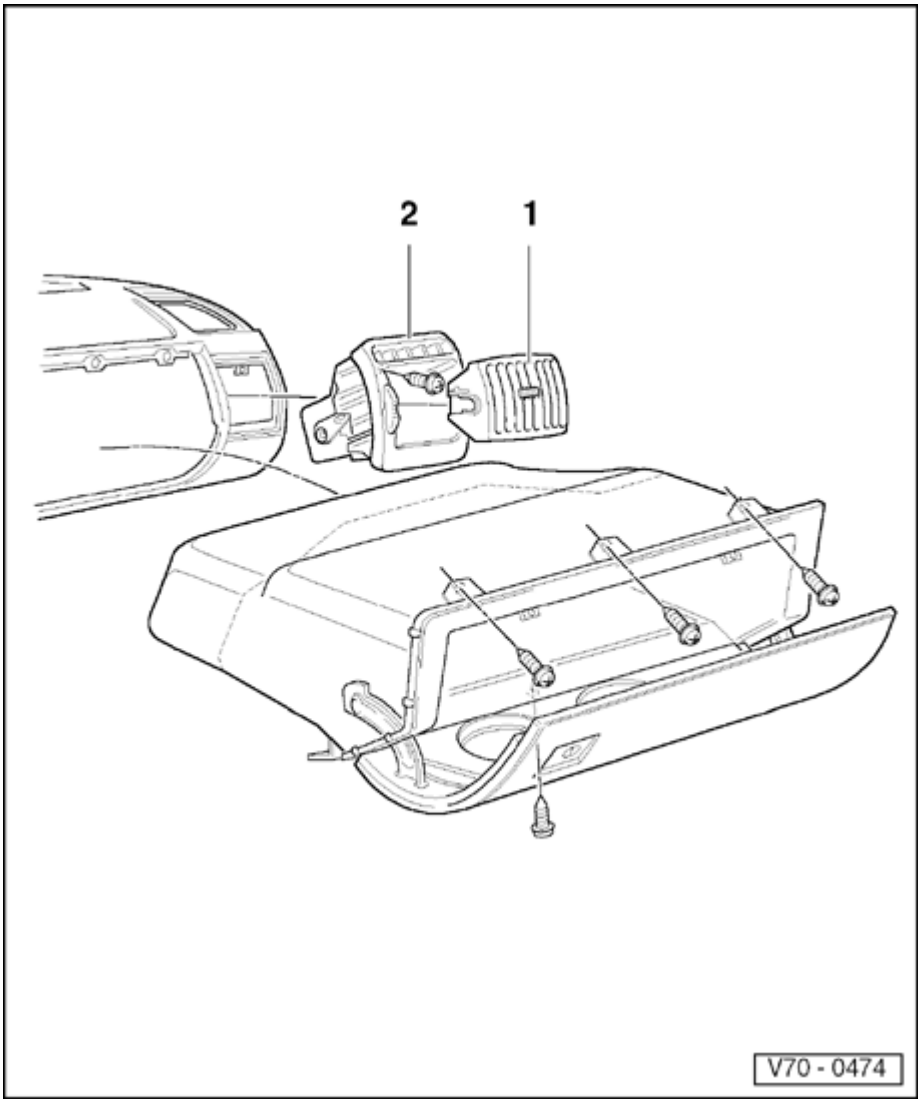

Glove box, removing

- Remove passenger s side storage shelf ⇒ Page 70-11 .
- Pull out vent insert -1-.
- Remove screw and remove vent -2-.
- Remove screws and remove glove box from instrument panel.
- Unclip glove box light.

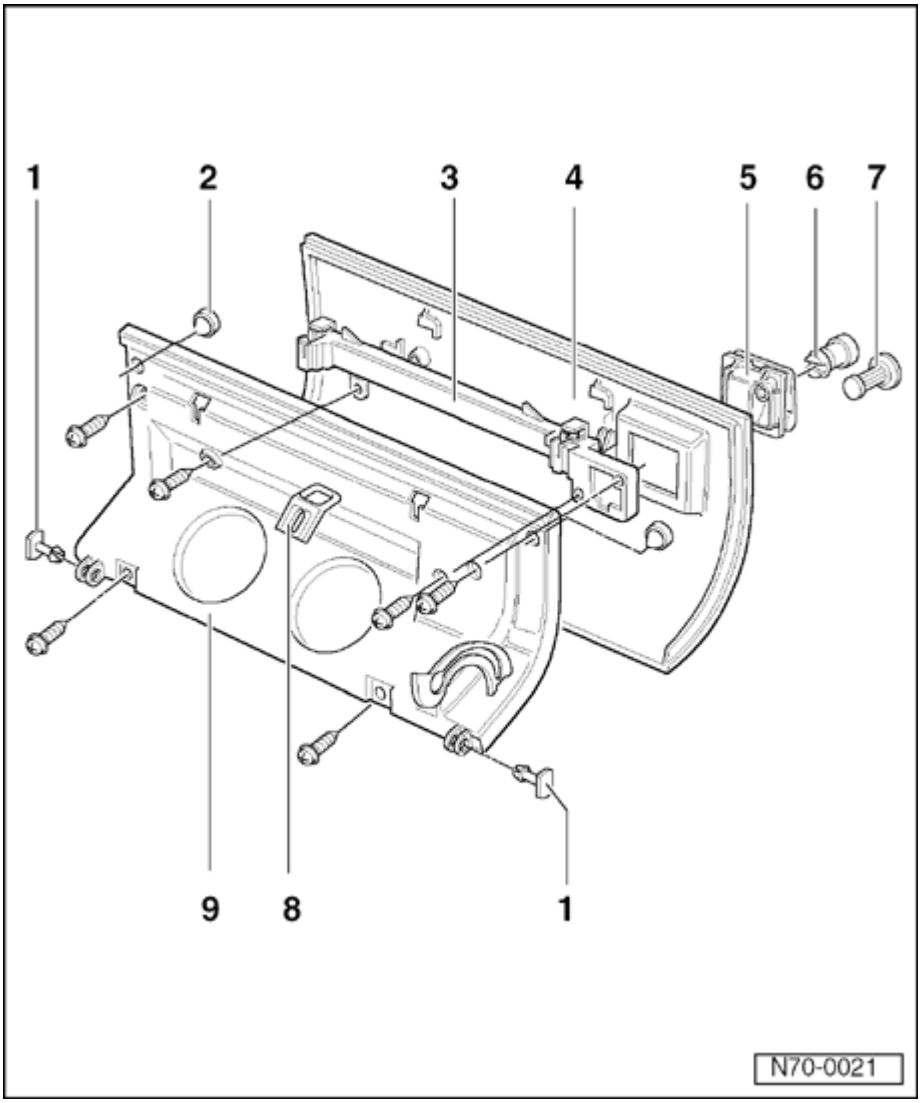

Glove box lock

1 - Hinge pin

- Inserted from outside toward center
- First remove storage shelf, passenger s side.

2 - Stop

- To remove, remove lid and disassemble.

3 - Lock

- Removing remove lid and remove mechanism
- Observe lugs.

4 - Glove box lid, outer part

- Remove only together with inner part.
- Removing push out hinge pins.

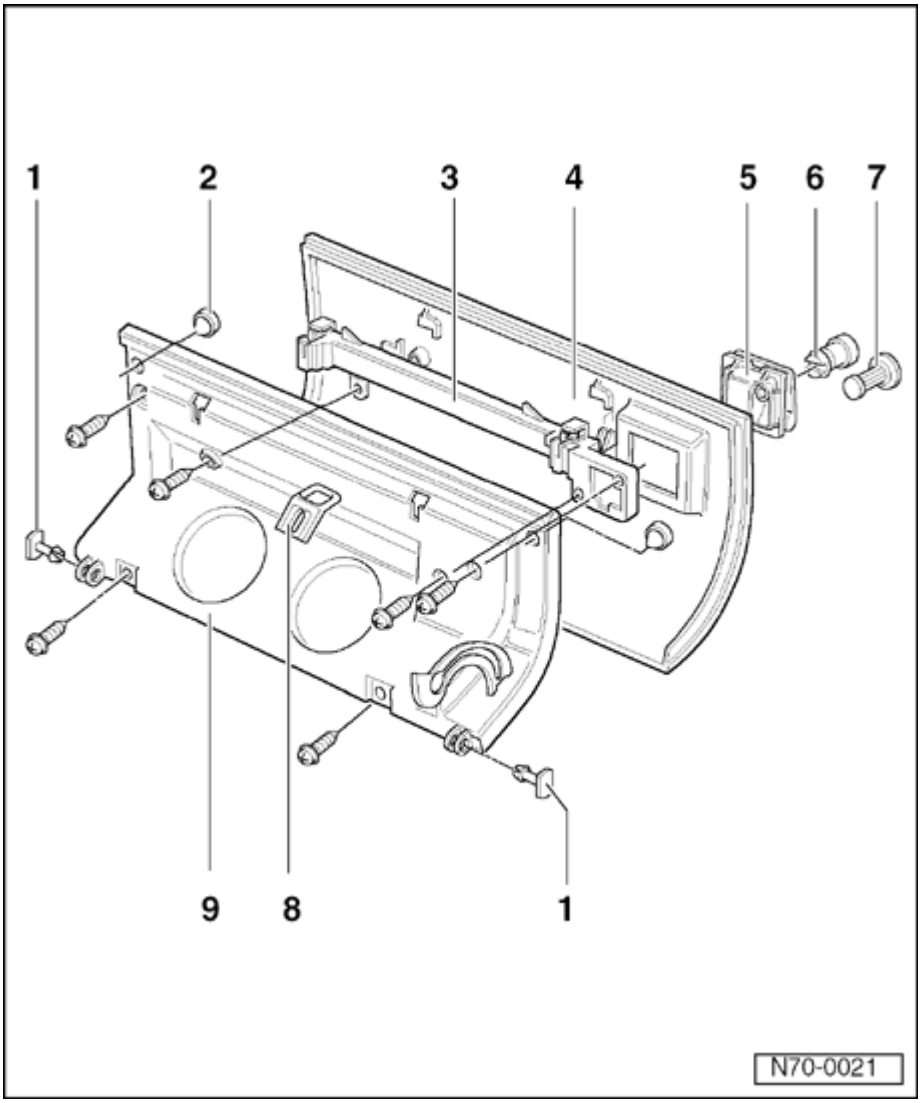

5 - Mechanism

- Removing disassemble lid.

6 - Lock cylinder

- Removing disassemble mechanism
  - Disassemble mechanism.
  - Carefully saw off lugs of mechanism. (Mechanism must be replaced.
- To retrofit lock cylinder, remove cover and press in lock cylinder.

7 - Cap

- To remove, remove mechanism and disassemble. Saw off end piece of cap.

8 - Locking bar

- Moves in elongated hole.

9 - Lid, inner part

- Remove only together with outer part.

Door trim

Special tools and equipment

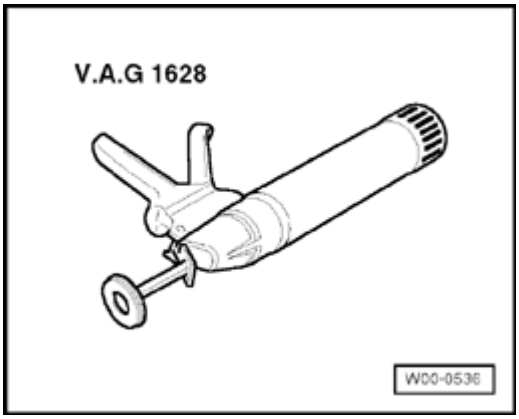

- VAG1628 cartridge holder

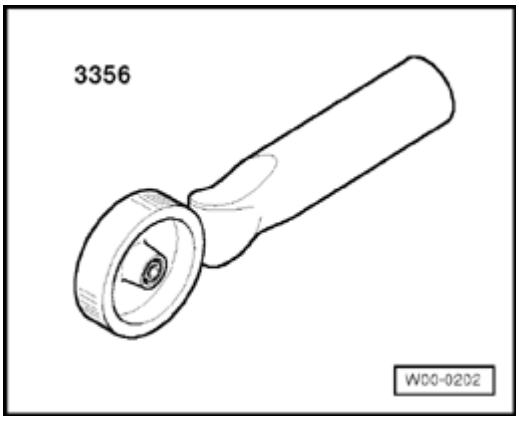

- 3356 roller
- Pin 3 mm dia.
- Adhesive sealer D 469 101 A3 (cartridge)

70-16

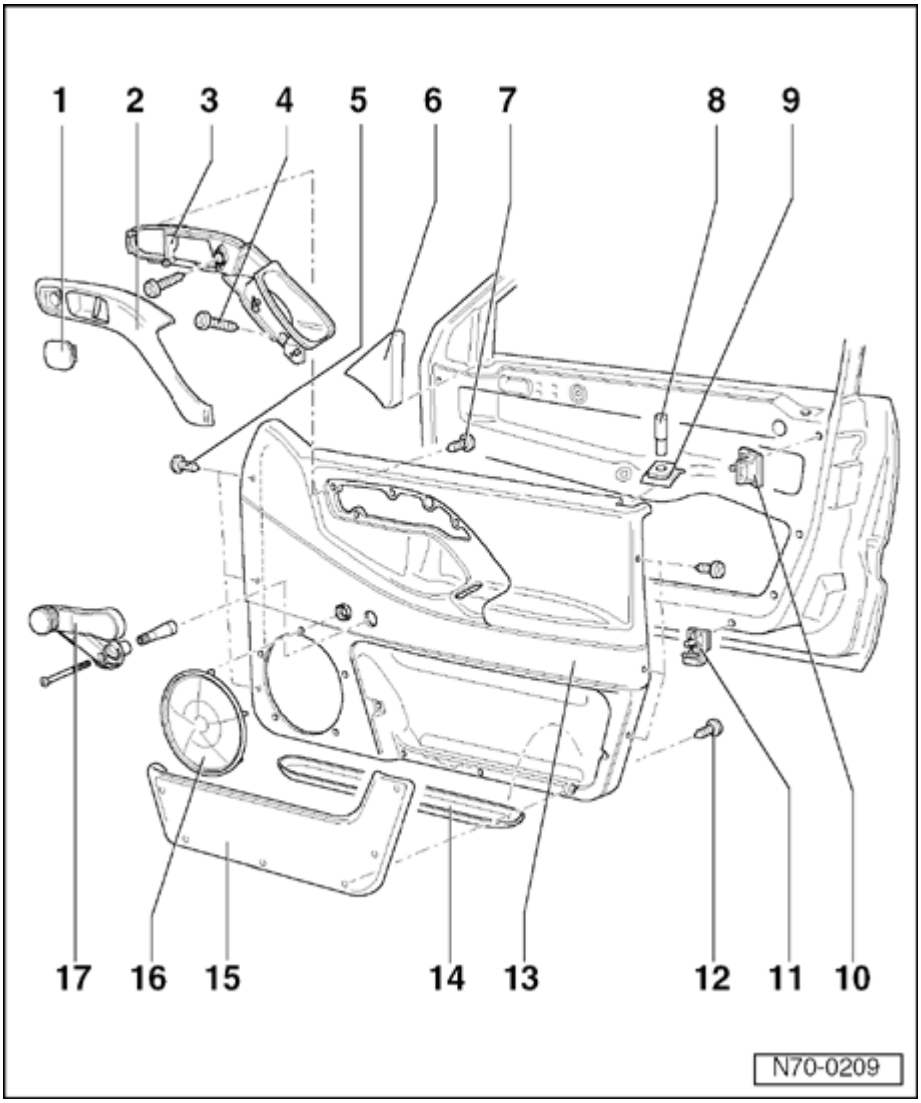

Front door trim

1 - Trim cover

- Location for exterior Mirror Adjustment Switch -E43- or for manual mirror adjustment.

2 - Cover

- Clipped into door pull.

3 - Door pull

4 - Screw

5 - Screw

6 - Trim cover

- Remove from door frame at right angles.
- Support with pry bar 80-200.

70-17

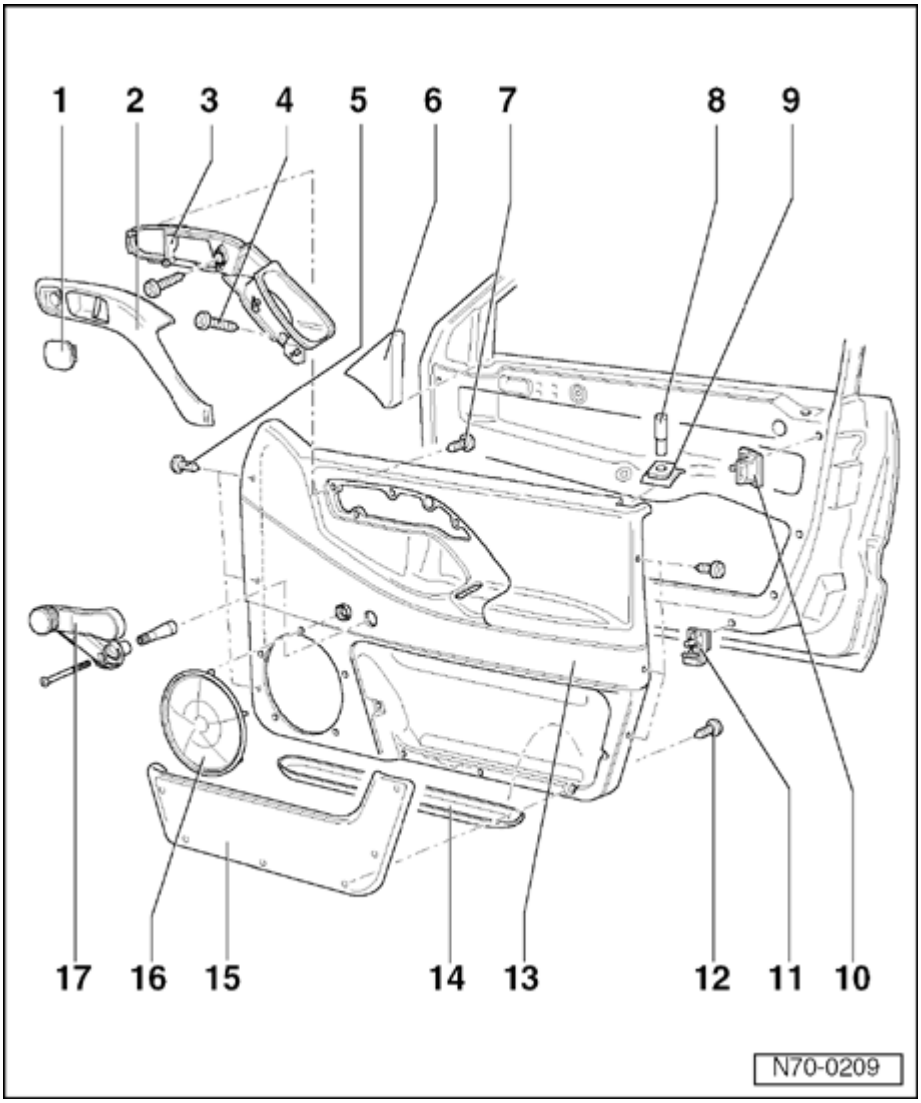

7 - Screw

8 - Locking knob

- Remove from locking rod.

9 - Trim plate

- After removing trim, unscrew locking knob - 8 - from locking rod and remove trim plate.

10 - Trim clip

- To remove: Drive out spreader pin.

11 - Retaining bracket

- Push pin out to remove.

12 - Screw

13 - Trim

- Removing and installing ⇒ Page 70-19

70-18

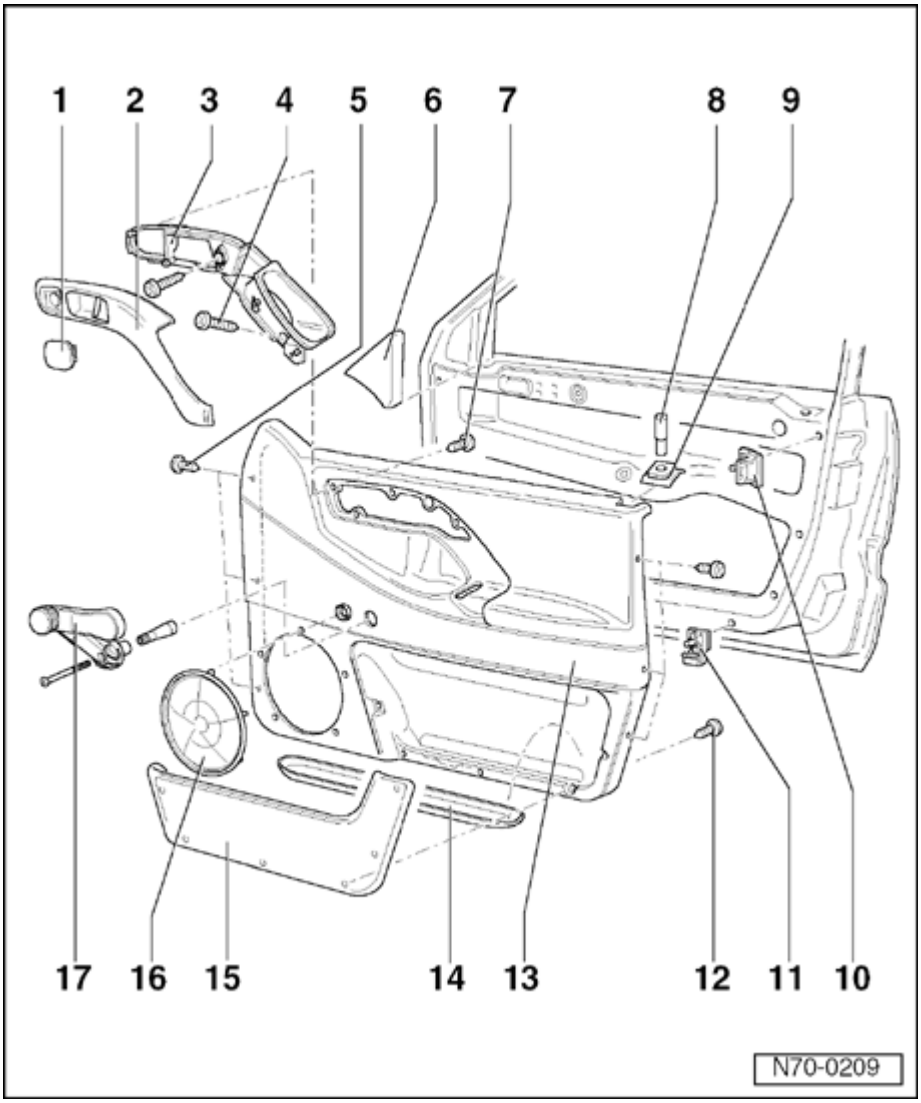

14 - Rubber inlay

15 - Front door tray

- Secured by screws through rear of trim.

16 - Speaker cover

- Fastened with clips from the rear of trim.

17 - Window crank

- Removing and Installing ⇒ Page 70-19
- Installation position when window is closed: 45° ± 12°

Front door trim, removing and installing

Removing

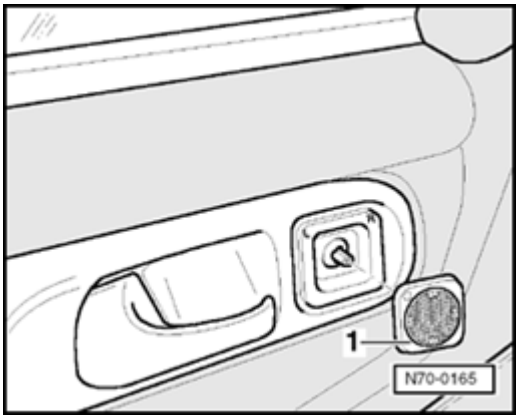

- Remove mirror adjustment knob -1-.

Note:

Illustration shows electric mirror adjustment. Manual mirror adjustment ⇒ Page 66-11 .

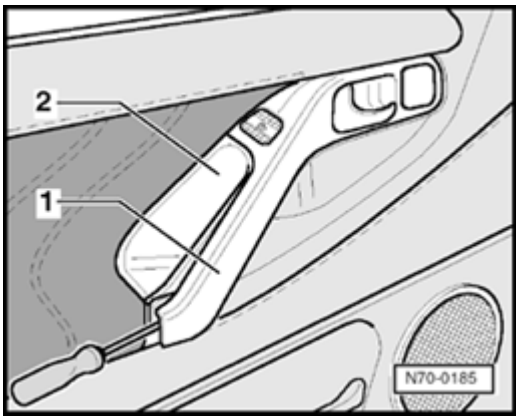

- Carefully pry out cover from door pull -2-.

70-20

Vehicles with power windows or electrically adjustable mirror

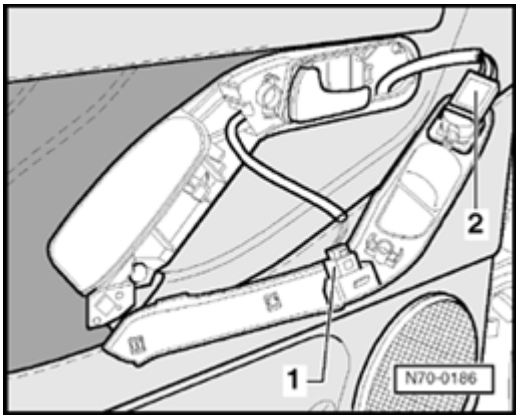

- Disconnect connector -1- for power mirror switch -E40- or -E 41- and if necessary connector -2- for mirror adjustment switch -E43-.

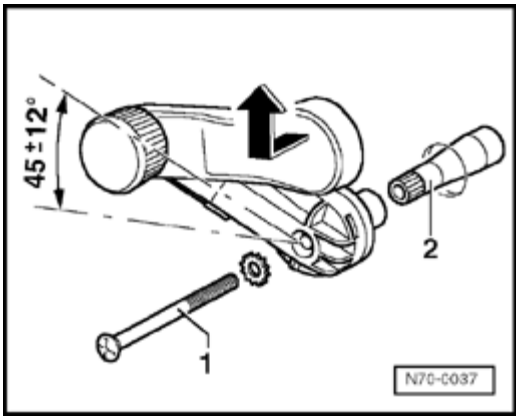

Vehicles with mechanical window crank

- Unclip in direction of arrow.
- Remove screw -1- with serrated washer.
- Pull off crank.
- Remove sleeve -2- (only front doors).

Note:

Installation position with closed window: 45° ± 12° .

70-21

Continued for all vehicles

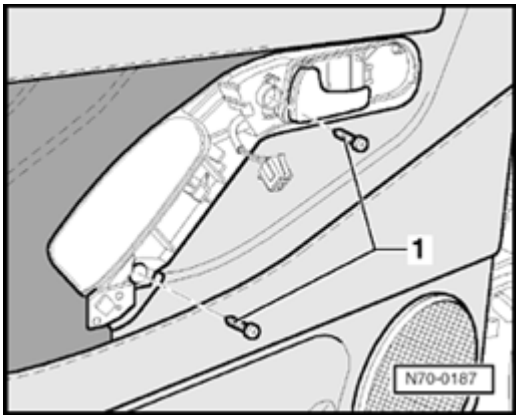

- Remove screws -1-.

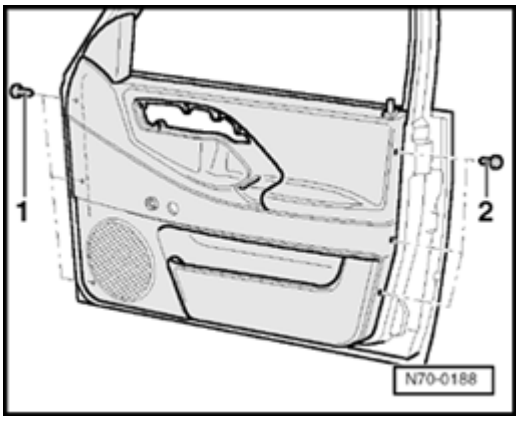

- Remove screws -1- and -2- at front and rear edge of door trim.

70-22

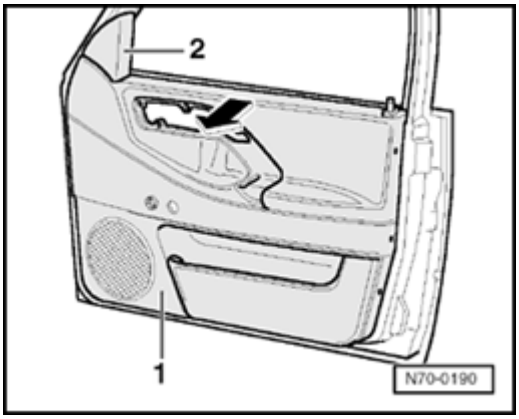

- Pull out door trim -1- upward from window slot seal -arrow-.

Note:

If it is difficult to remove the door trim close to trim -2-, also remove this trim.

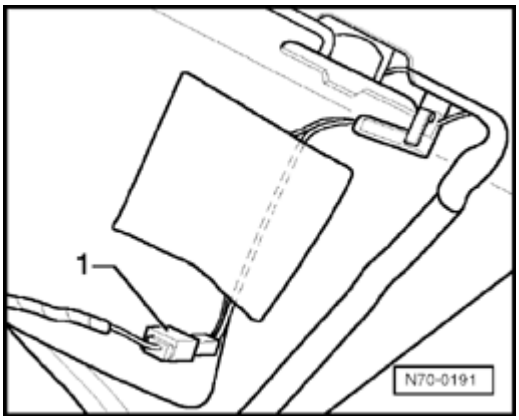

- Disconnect connector -1- for Warning Light for Anti-theft Immobilizer sensor -K117- (only driver s side).
- Lift door trim out of retainer brackets.

Installing

Installation is in reverse order of removal.

70-23

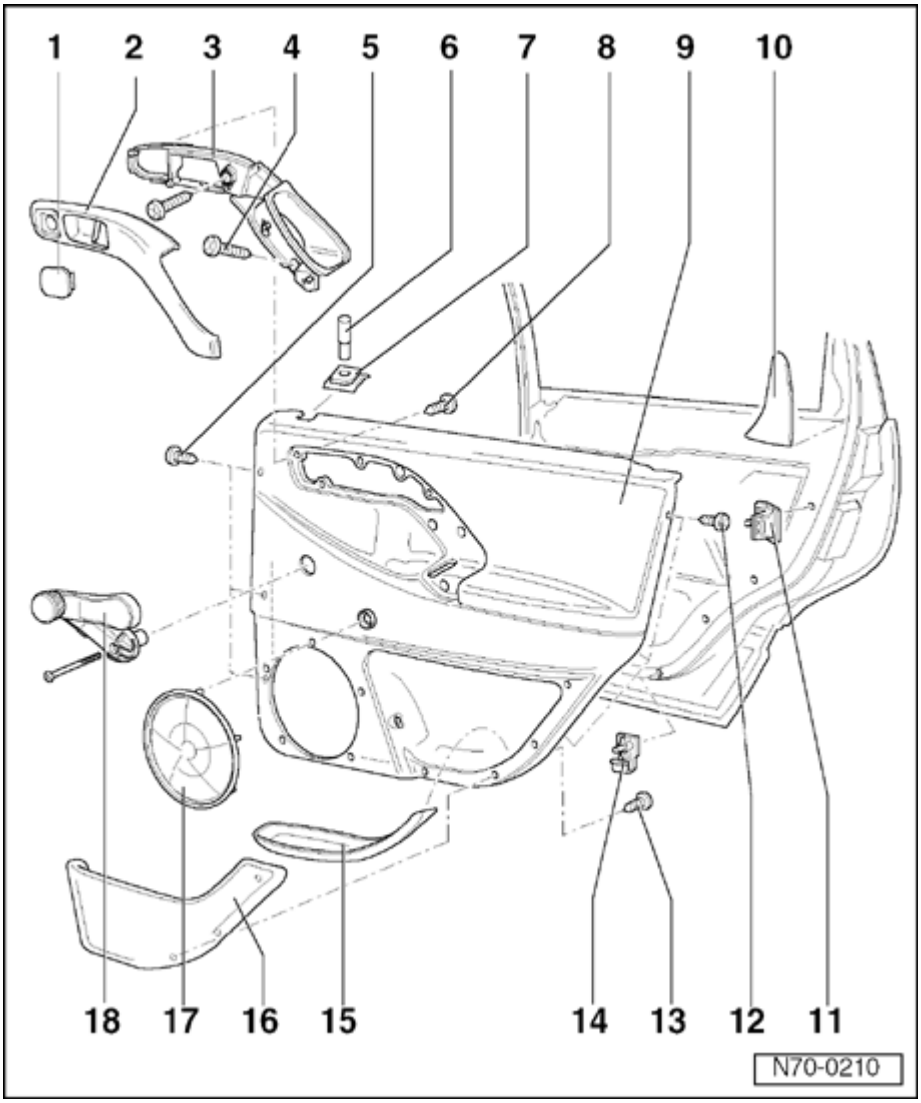

Rear door trim

1 - Cover

- Position for treble speaker.

2 - Trim cover

- Clipped into door pull.

3 - Door pull

4 - Screw

5 - Screw

6 - Locking knob

- Remove from locking rod.

7 - Trim plate

- After removal of door trim, unscrew locking knob - 6 - from lock rod and remove trim plate.

70-24

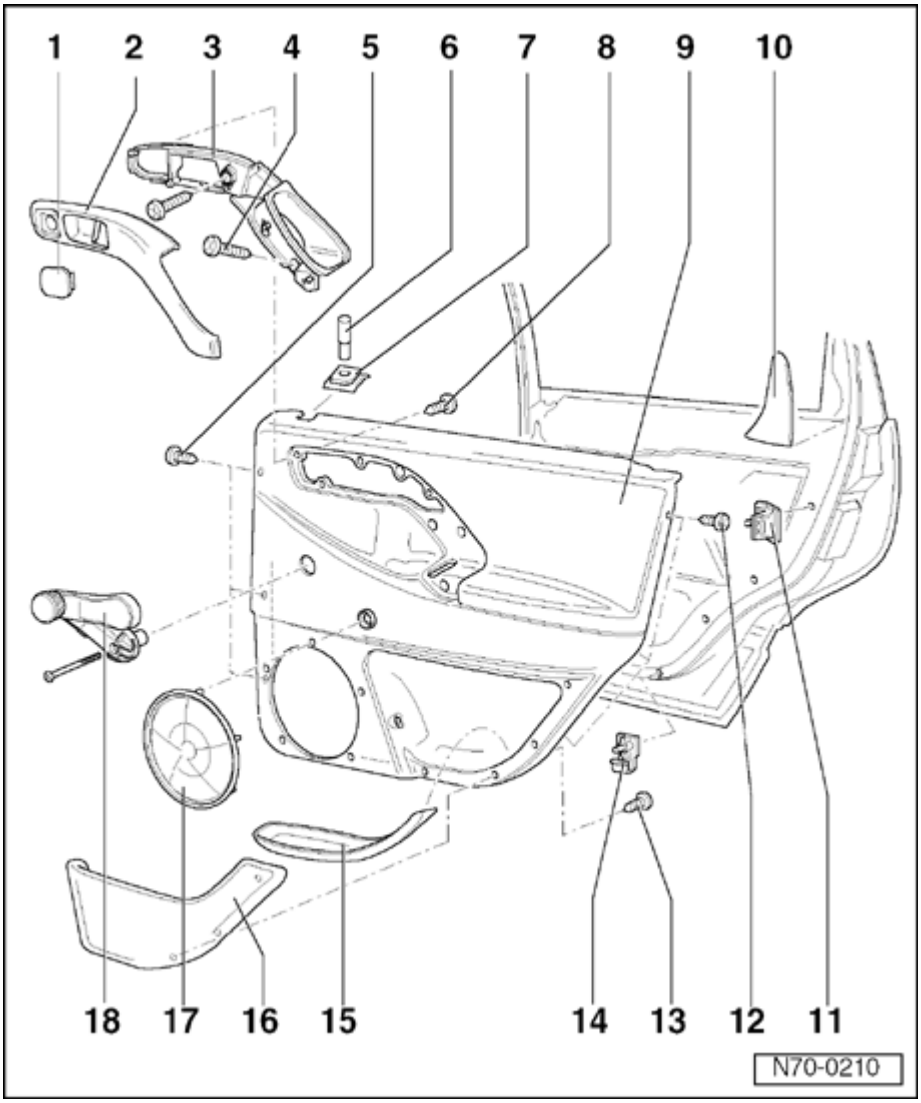

8 - Screw

9 - Door trim

- Removing and installing ⇒ Page 70-26 .

10 - Trim cover

- Remove from door frame at right angle.
- Support with pry bar 80-200.

11 - Trim clip

- Push pin out to remove.

12 - Screw

13 - Screw

14 - Retaining bracket

- Push pin out to remove.

70-25

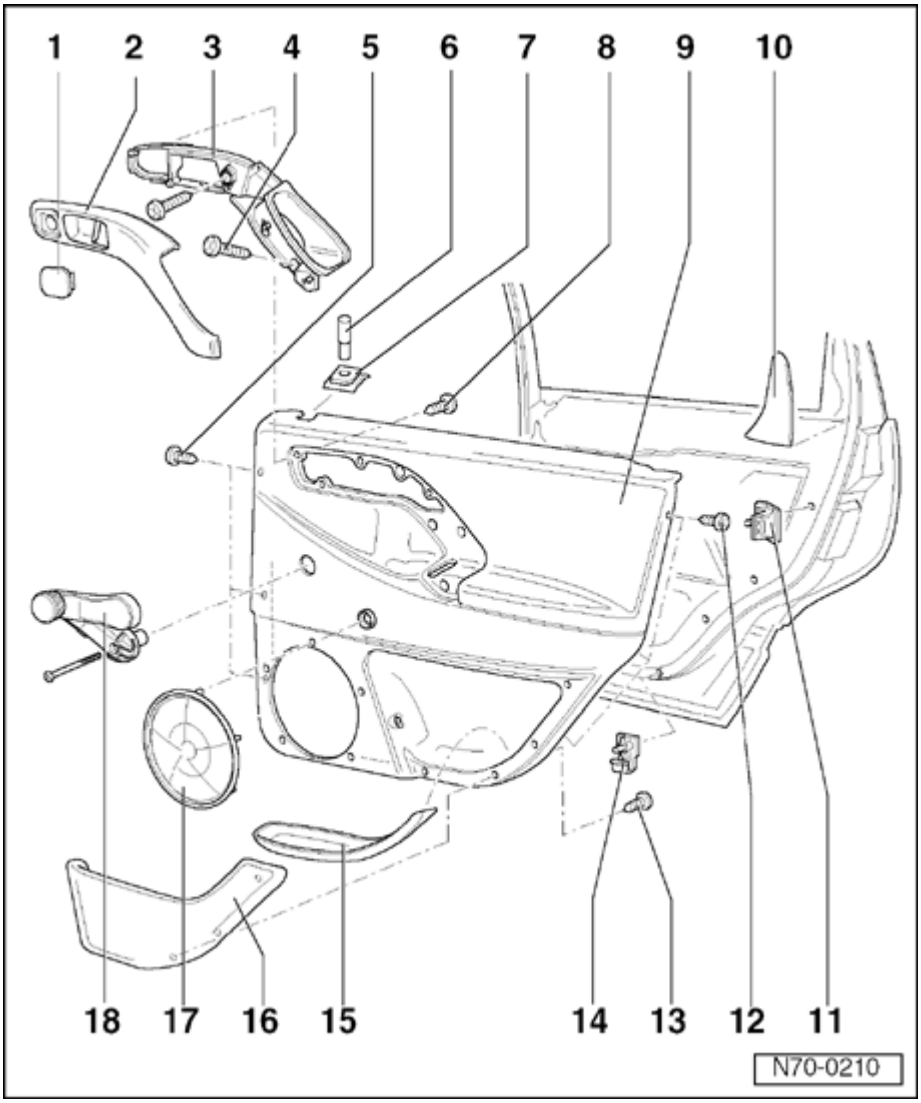

15 - Rubber inlay

16 - Rear door tray

- Secured by screws from rear of door trim.

17 - Speaker grille

- Secured by clips from rear of door trim.

18 - Window crank

- Removing and installing ⇒ Page 70-27 .
- Installation position with window closed: 45° ± 12°

Rear door trim, removing and installing

Removing

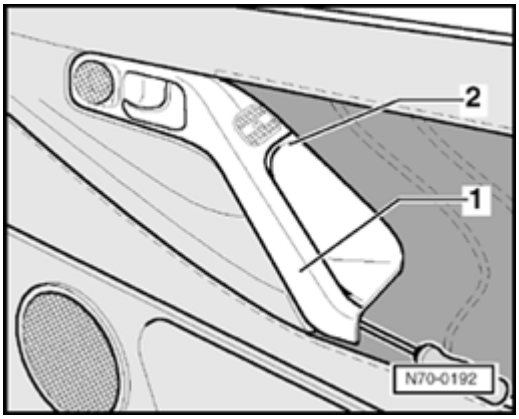

- Pry out cover -1- from door handle -2-.

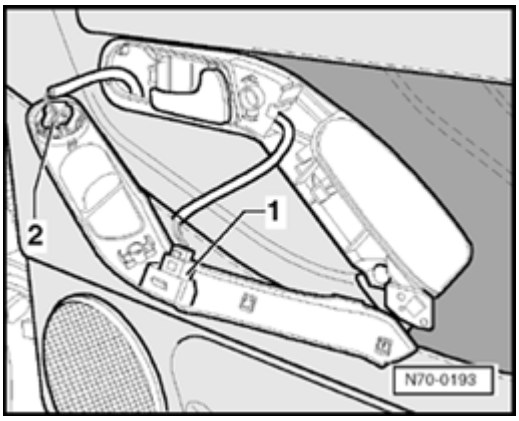

Vehicles with power windows

- Disconnect connector -1- for window switch -E52- or -E54- and, if necessary, connector for treble speaker -R14- or -R15-.

70-27

Vehicles with mechanical window winders

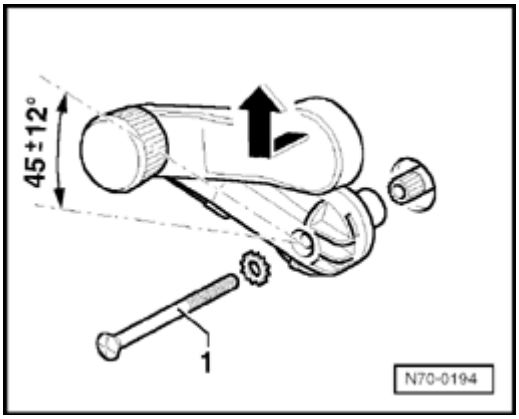

- Unclip cover in direction of arrow.
- Remove screw -1- with serrated washer.
- Pull off window crank.

Note:

Installation position with window closed 45° ± 12° .

All vehicles

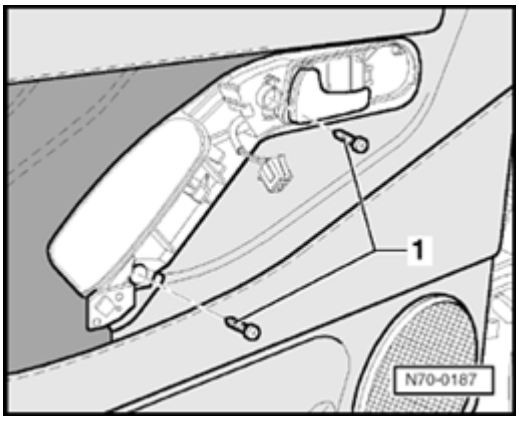

- Remove screws -1-.

70-28

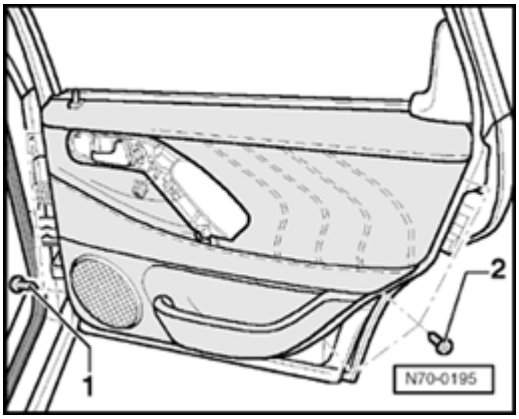

- Remove screws -1- and -2- at front and rear edge door trim.

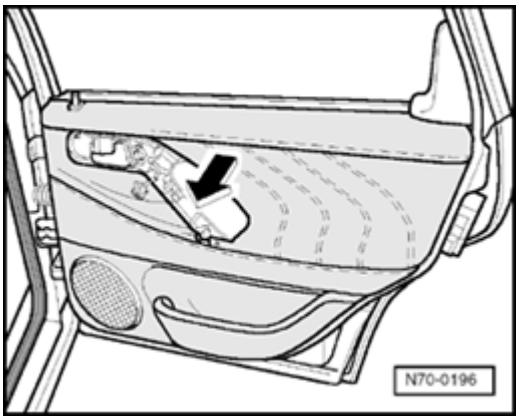

- Remove door trim from top of window slot seal -arrow- and then lift out of retaining brackets at bottom.

Installing

Install in reverse order of removal.

70-29

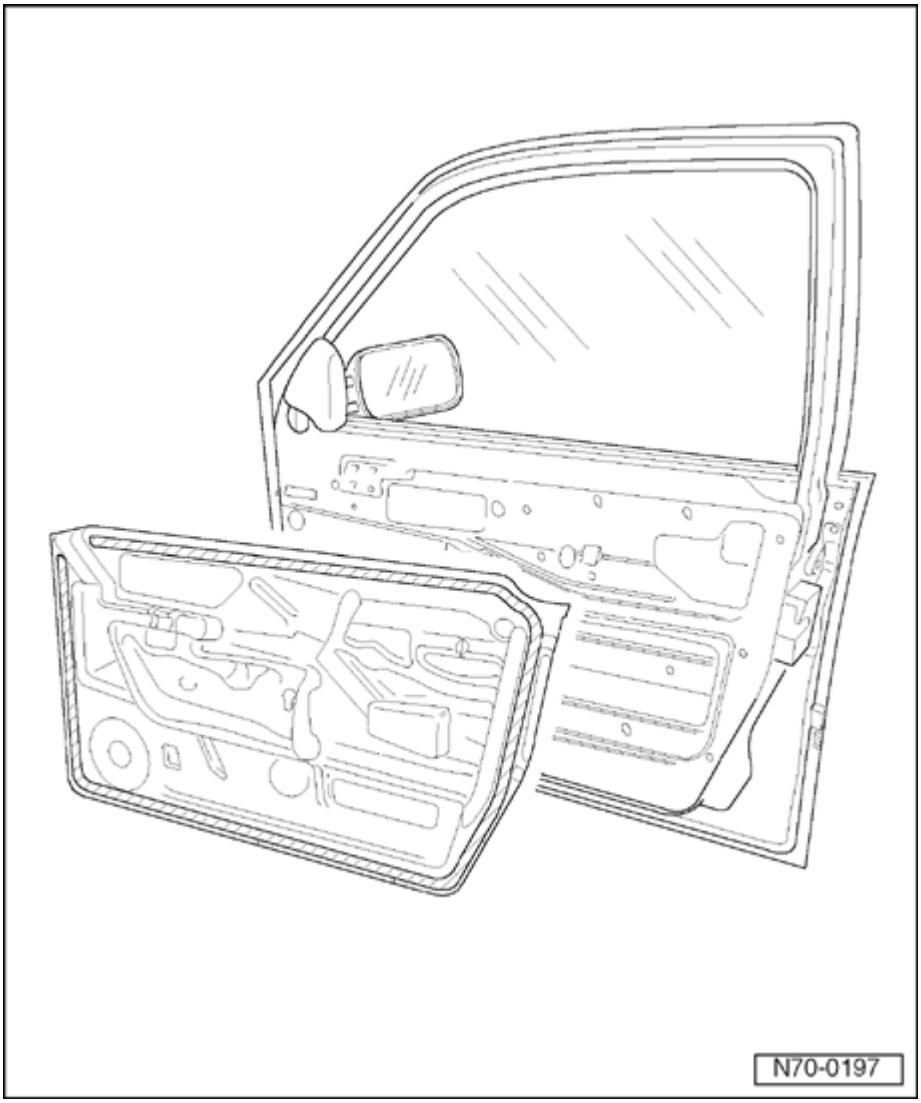

Door moisture barrier, removing and installing

The door moisture barrier is designed to protect and seal the vehicle interior against noise, water entry and drafts.

Moisture barrier foil can be removed and reinstalled up to 4 times without the need of additional adhesive, providing that the foil is not damaged.

Replacement parts for moisture barrier foil with adhesive are provided up to 02.95.

Replacement parts for moisture barrier foil without adhesive are provided from 03.95.

For replacement parts use adhesive D 469 101 A3.

Adhesive area is shown as the hatched area in the illustration.

70-30

Removing

- Remove door trim ⇒ Page 70-19 or ⇒ Page 70-26 .

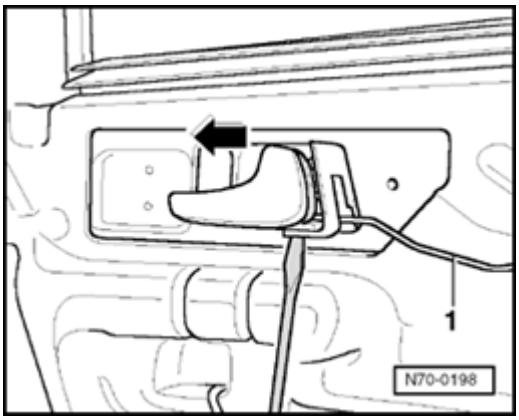

- Remove securing tab from opening in door.
- Remove interior door handle by pushing in driving direction and disengage pull rod -1-.

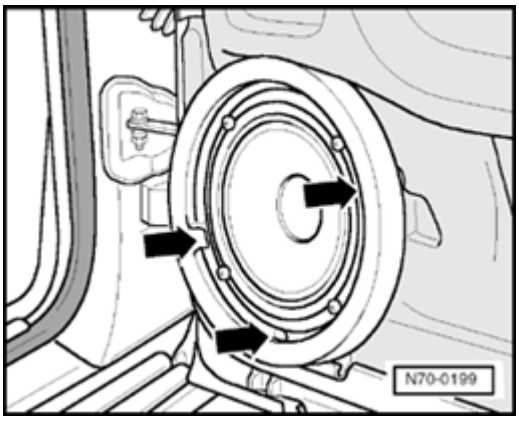

- Remove screws (arrows). Remove door loudspeaker with frame and disconnect connector.

70-31

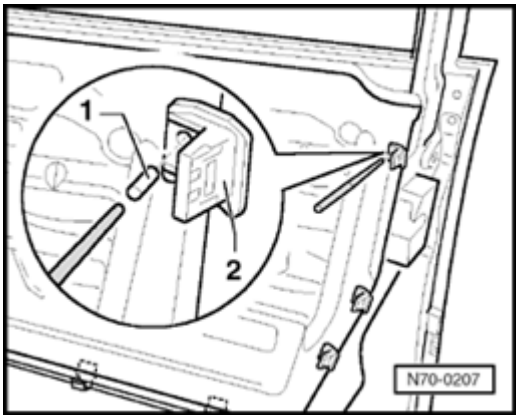

- Remove clips -1- for retainers and trim clips by pushing pins with a drift approx. 3 mm in diameter toward inside and remove retainers -2-.

Notes:

- *Check clips and retainers for damage, replace if necessary.*
- *Remove spreader pins and retainers from inside of door after removing moisture barrier.*

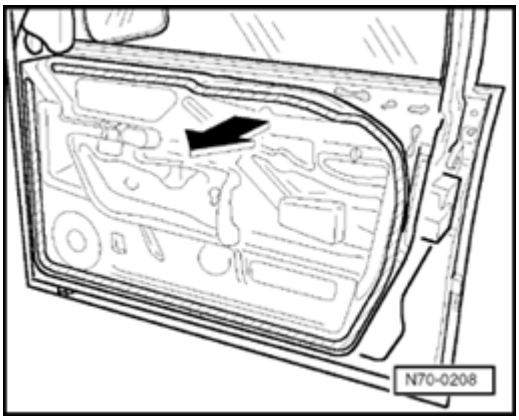

- Remove moisture barrier foil all around gradually step by step (about 15 cm per step). Grasp foil close to hatched area if possible.

70-32

Installing

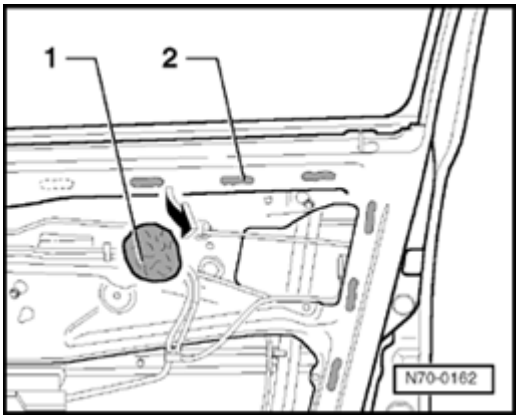

- When replacing foil, remove remaining adhesive on door -2-. Remove some of old adhesive, form a ball and use it to dab off remaining adhesive.

Replacement moisture barrier foil up to 02.95

- Guide electrical wiring for door components (window motor, loudspeaker and seat adjusters) through foil and remove protective strip from adhesive.
- Adjust foil according to openings for securing clips and press on.

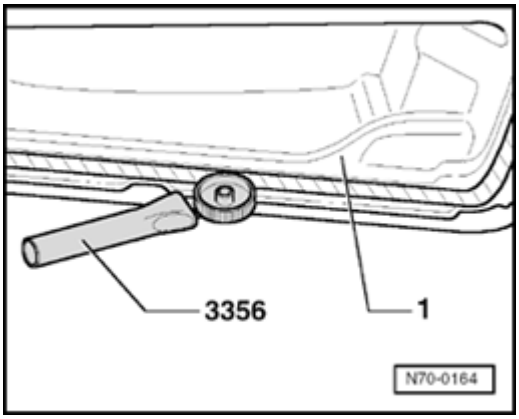

- Press on moisture barrier foil in adhesive area (hatched area) -1- to door all around using roller 3356.
- Check for firm adhesion especially at lower section of door.

70-33

Replacement moisture barrier foil from 03.95

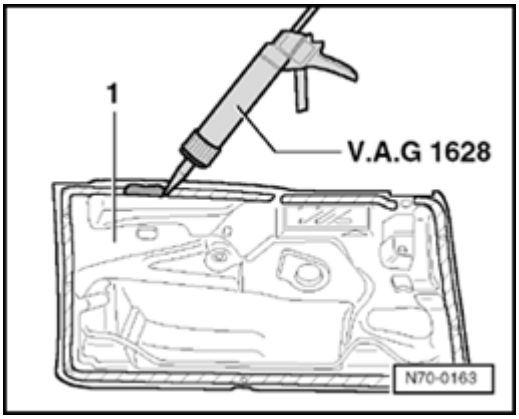

- Using cartridge gun VAG1628, apply adhesive D 469 101 A3 (adhesive bead about 5mm dia.) all around on foil -1- (hatched area).
- Guide electrical wiring for door components through foil (window motor, loudspeaker and seat adjusters).
- Adjust foil according to openings for securing clips and press on.

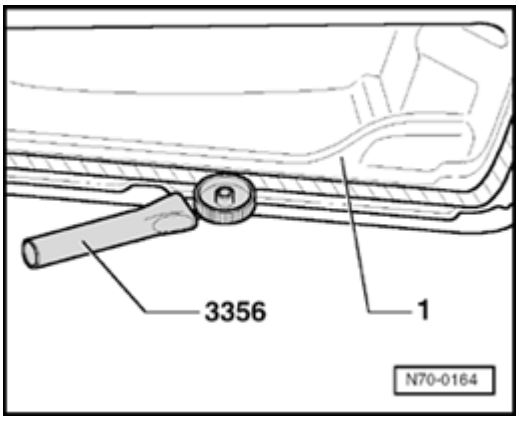

- Press on moisture barrier foil in adhesive area (hatched area) -1- to door all around using roller 3356.
- Check for firm adhesion especially at lower section of door.

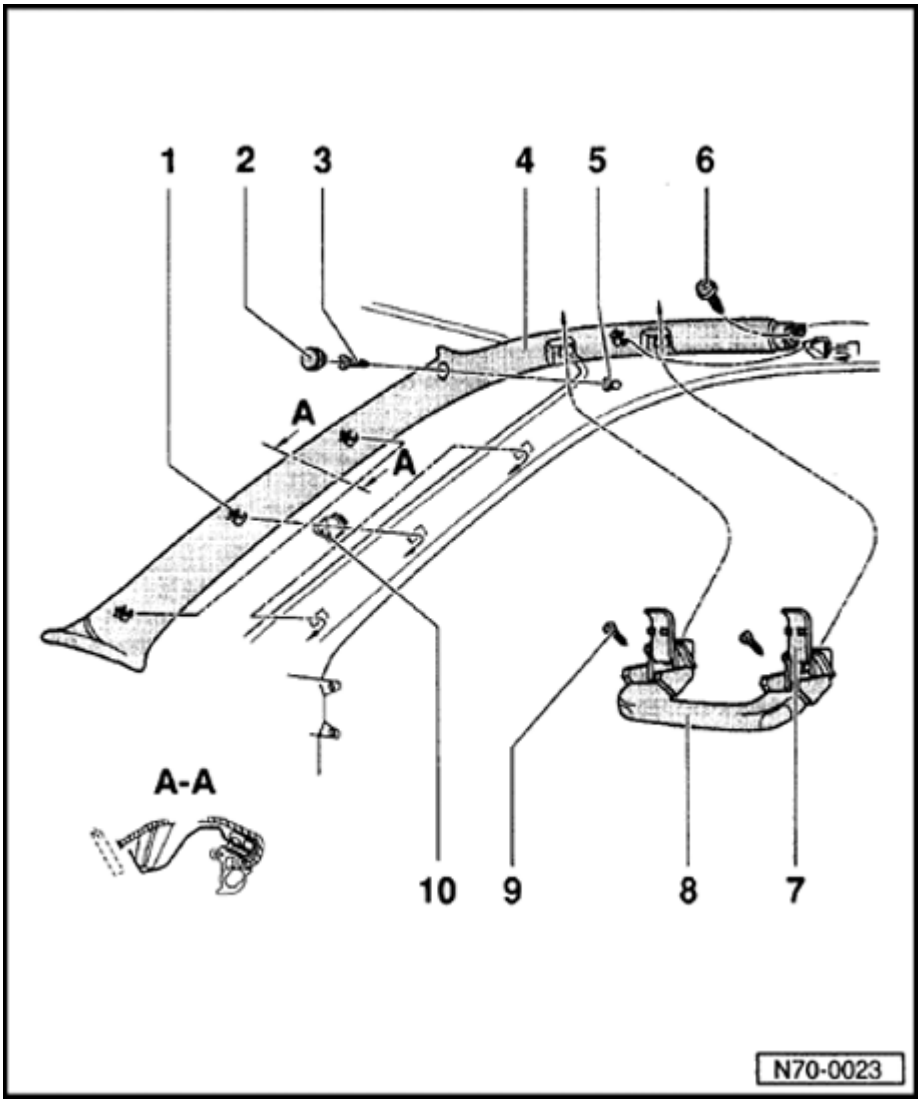

Trim

Upper A-pillar trim, removing and installing

Note:

The trim fits over sealing flange of door seal section, see section A-A.

1 - Retaining clip

2 - Cover cap

- Pry out.

3 - Screw

4 - Trim

- To remove, first remove upper trim of B-pillar.
- Removing
  - Remove grab handle -8- and pry out cover -2-.
  - Remove screws -3- and -6-.
  - Starting at rear, pull off clips parallel to sealing flange.

70-35

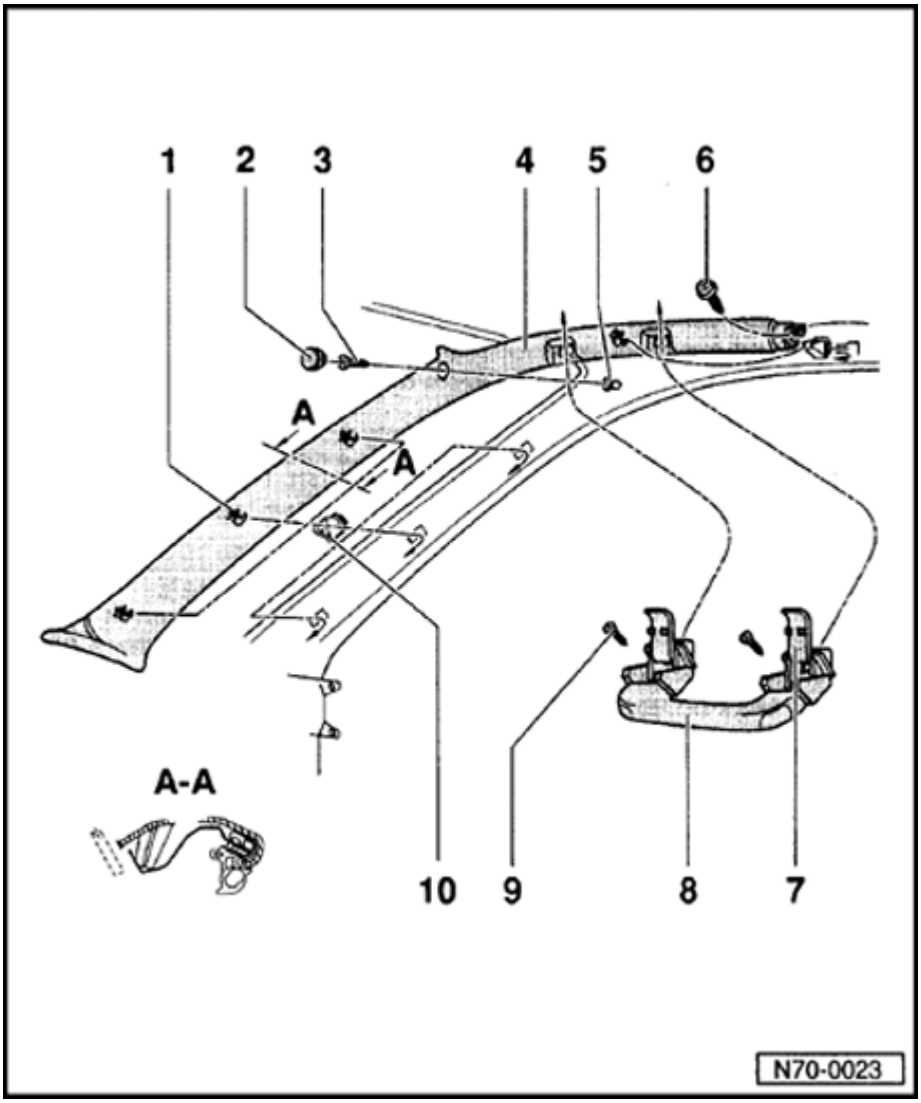

5 - Spreader nut

6 - Screw

7 - Cover cap

- Part of grab handle - 8 -.

8 - Grab handle

- To remove:
  - Fold grab handle down.
  - With a screwdriver pry out cover - 7 -, remove screws - 9 - and remove grab handle.

9 - Screw

10 - Clip

- Pushed into A-pillar mounting point.

70-36

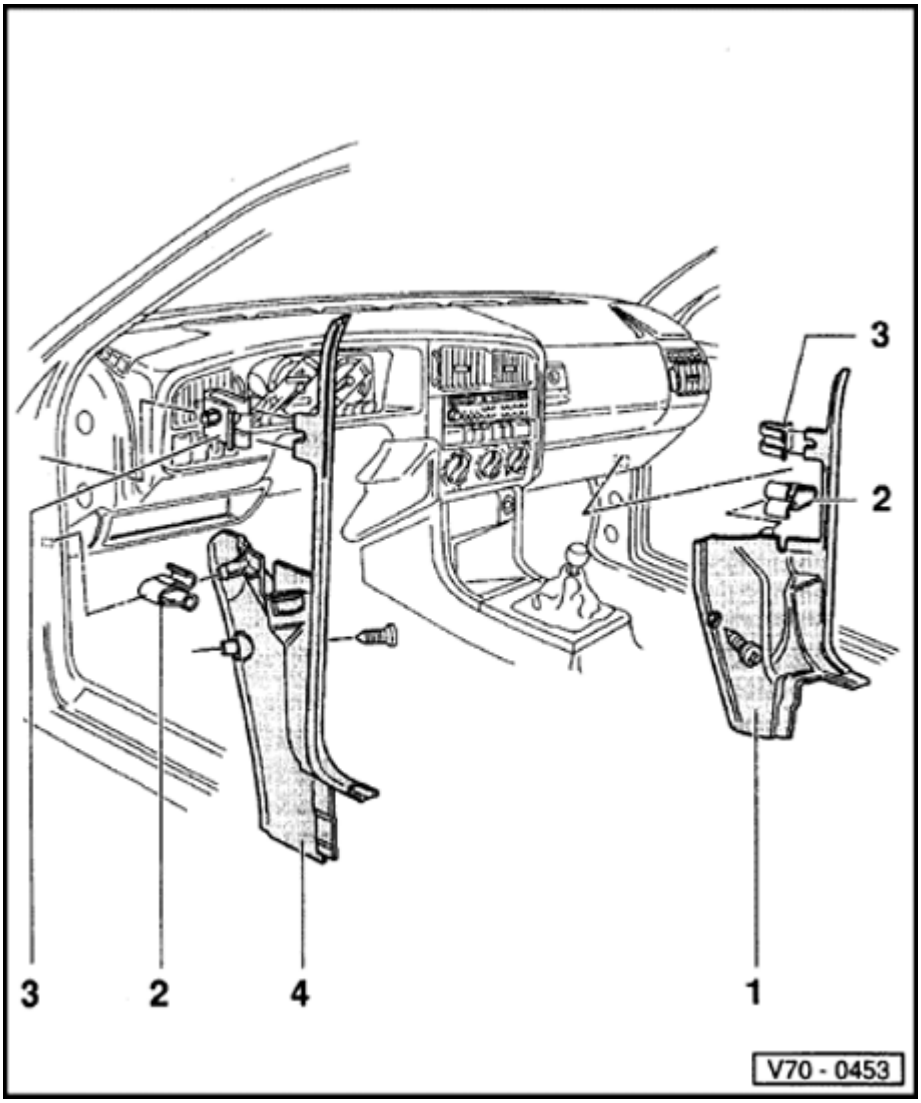

Lower A-pillar trim, removing and installing

Note:

To remove lower trim panel (right or left), remove inner sill panel trim ⇒ Page 70-61 .

1 - Right trim

- Removing
  - Remove screw.
  - Remove trim from retaining clip.
  - Pull out from clip.
- Trim can be pulled out from under A-pillar trim.
- Installing:
- Position trim under upper trim of A-pillar, guide into clamp and press pins into retaining clip.
- To make installation of pins into retaining clips easier, remove screw for lower storage tray.
- Check for correct seating of of trim on door inner seal.

70-37

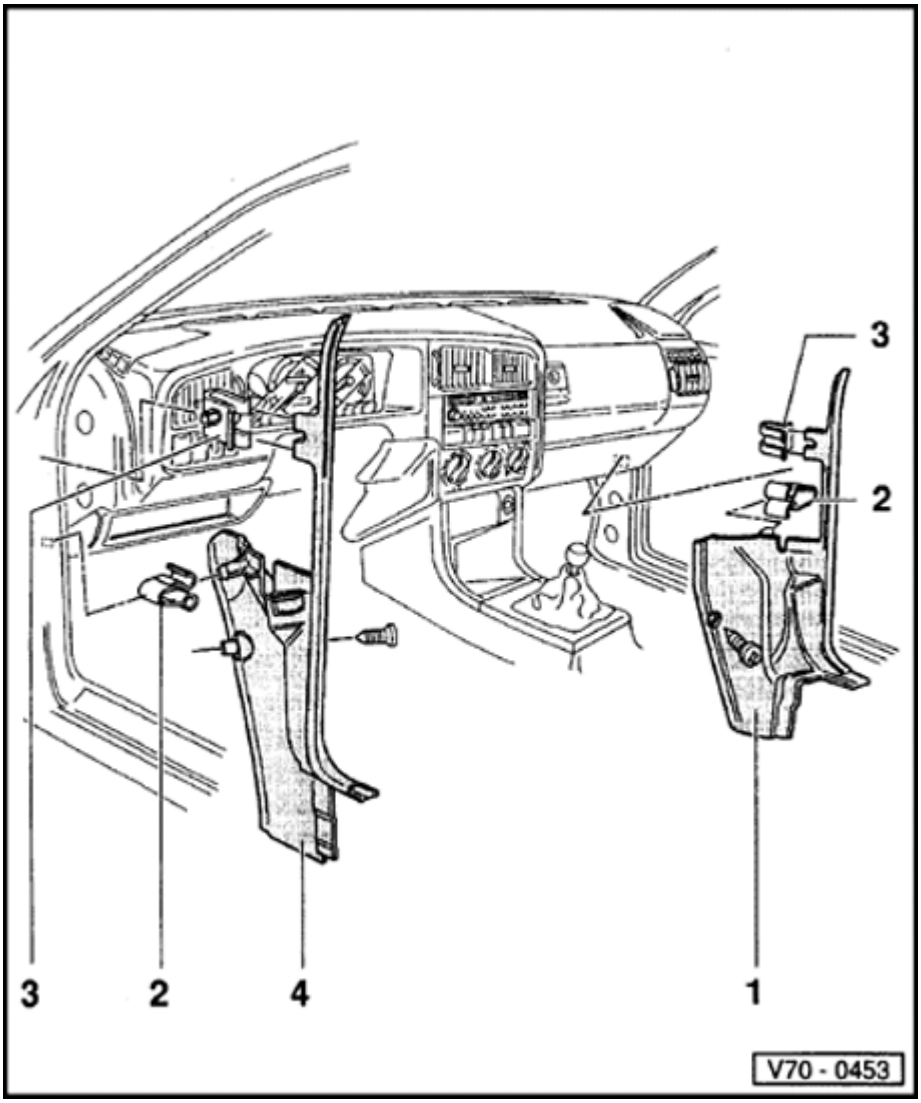

2 - Spring clip

- Inserted into A-pillar.

3 - Clip

- If clipped too tightly in trim, open clip slightly with screwdriver.
- Inserted into A-pillar.

4 - Left trim

- Removing
  - Remove hood release and disengage cable.
  - Remove screw, pull out trim from spring clip, then pull out from clip.
- Trim can be pulled out from under upper A-pillar trim.
- Installing:
- Place under upper A-pillar trim, guide into clip and press pins into retaining spring clip.
- To make installation of pins into retaining clips easier, remove screw for lower storage tray.
- Check for correct seating of of trim on door inner seal.

70-38

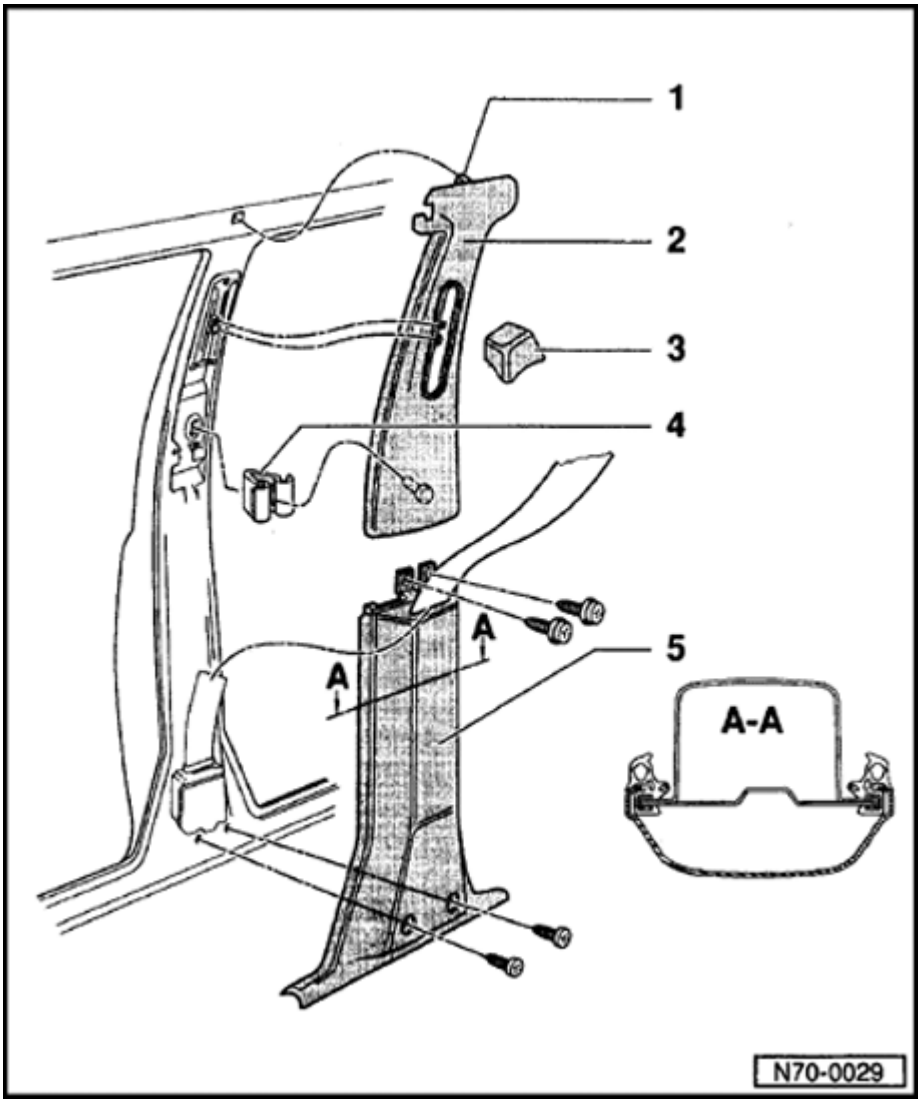

B-pillar trim, removing and installing

Note:

The trim fits over sealing flange of door seal section, see section A-A.

1 - Retaining pin

- Engages in roof frame.

2 - Upper trim

- Removing
- Remove relay fitting (40 Nm).
- Pull out trim from upper spring clip.
- Note: locking lugs at top, they engage behind A-pillar trim and C-pillar trim.
- Installing:
- Locate upper retaining pins in roof frame and push trim panel up until lower retaining lugs grip trim panel.
- Press upper retaining lugs behind trim.
- Press trim over sealing flange.

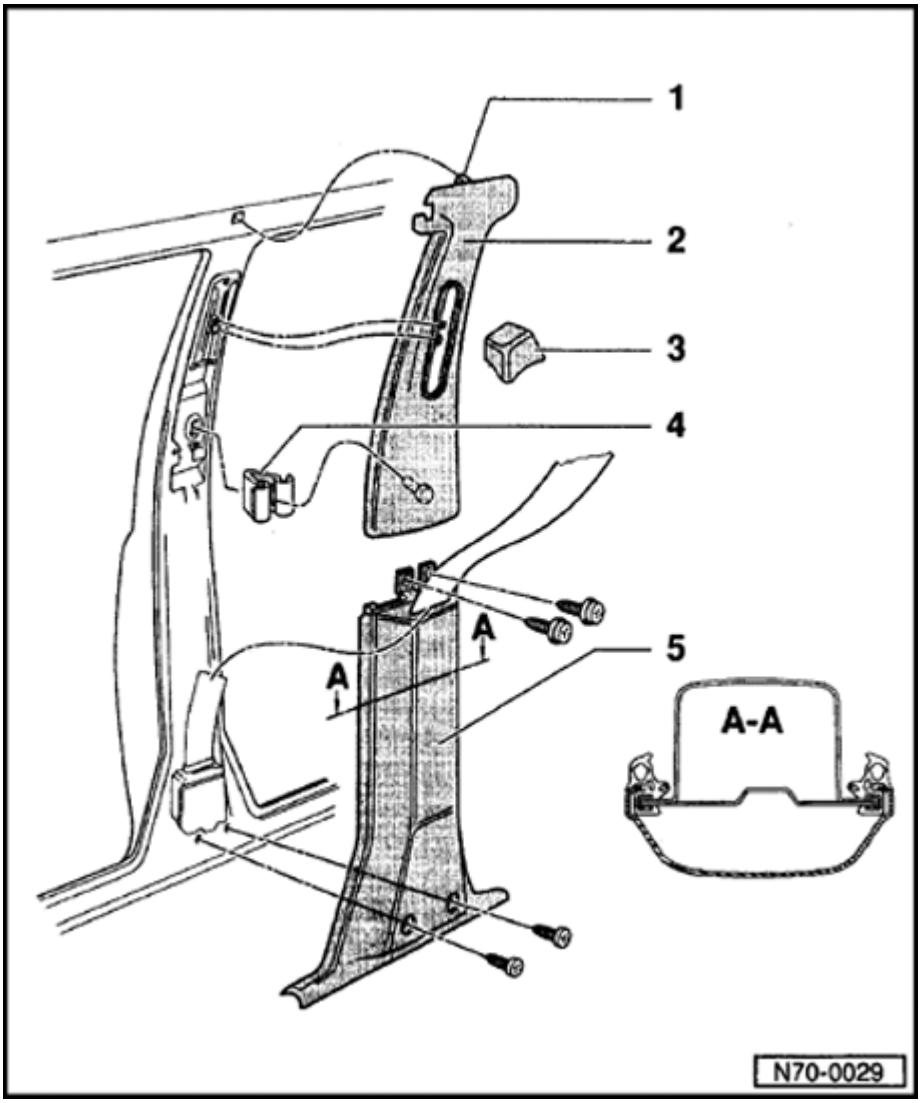

3 - Operating button

- Pull off from height adjustment mechanism.

4 - Spring retaining clip

5 - Lower trim

- To remove, remove inner sill panel cover ⇒ Page 70-61
- Remove front fitting 40 Nm (30 ft lb)

70-40

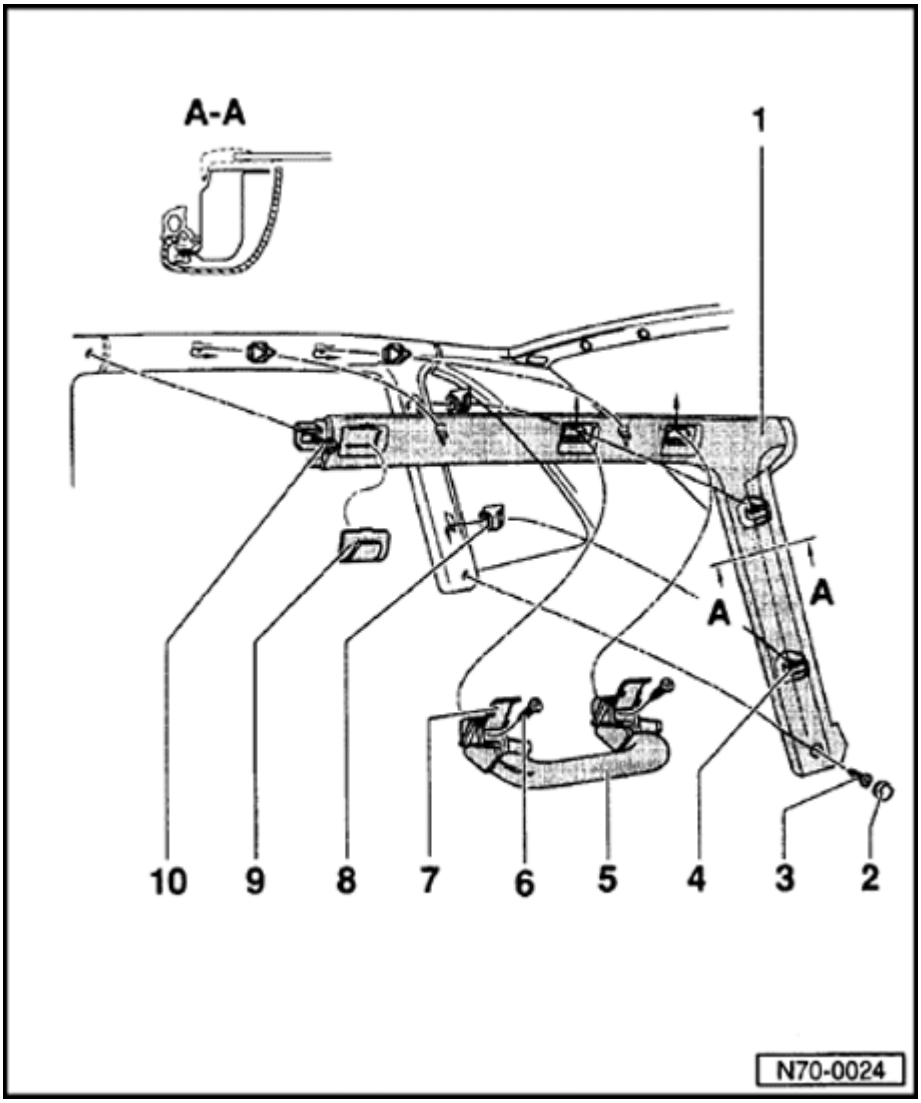

Upper C-pillar trim, removing and installing

Notes:

- *The trim fits over sealing flange of door seal section, see section A-A.*
- *Illustration shows Sedan, for Wagon there is an additional clip in the roof frame.*

1 - Trim

- To remove, first remove upper trim for B-pillar and cover of inertia reel for safety belt. Also loosen trim for D-pillar.
- Removing
  - Remove grab handle -5-.
  - Pry out cover cap -2- .
  - Remove screws -3- and -10-.
  - Pull lower side of trim down and remove from seal flange and clips -8-.
- Installing:
- Press over sealing flange and then push into clips.

70-41

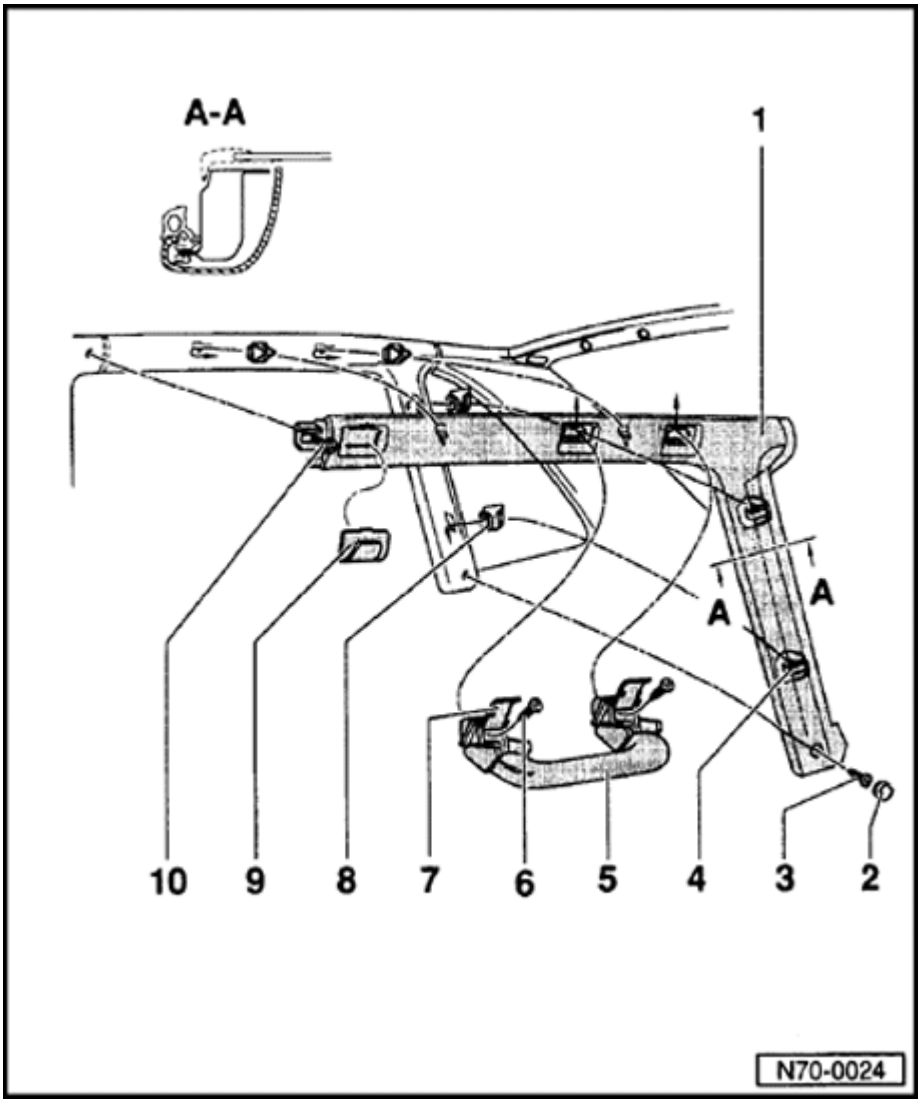

2 - Cover cap

- Pry out.

3 - Screw

4 - Retaining clip

5 - Grab handle

- Removing
  - Fold grab handle down.
  - With screwdriver pry out cover -7-.
  - Remove screws -6- and remove grab handle.

70-42

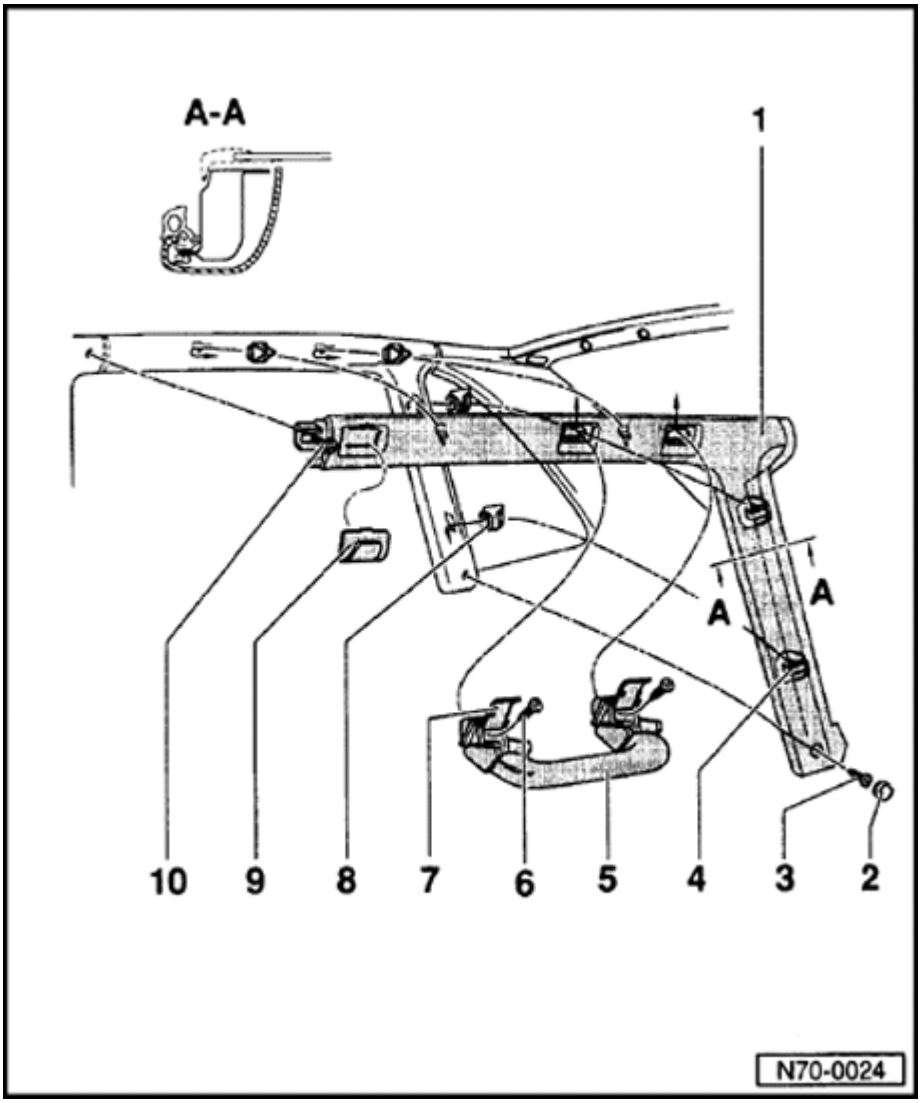

6 - Screw

7 - Cap

- Part of grab handle - 5 -

8 - Clip

- Disengage in opposite direction of arrow.

9 - Coat hook

- Clipped into trim.

10 - Screw

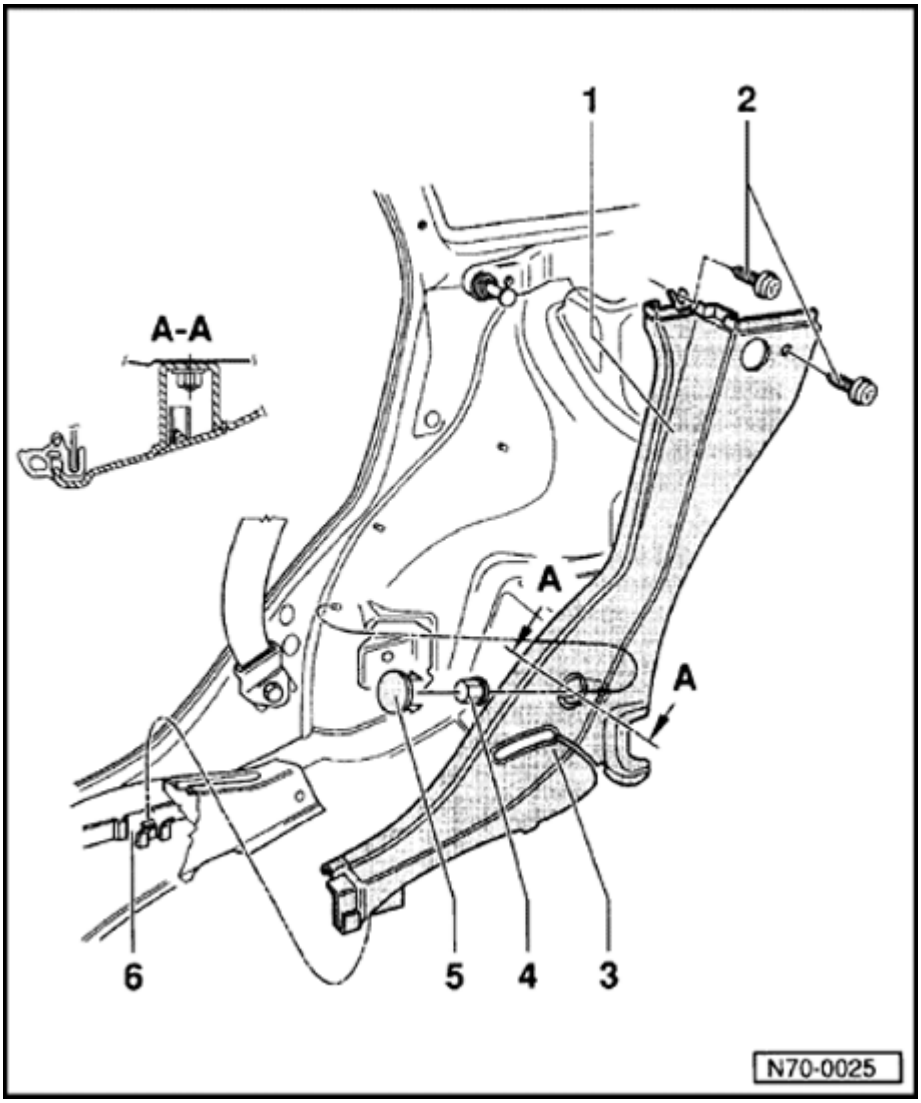

Lower C-pillar trim, removing and installing

Note:

The trim fits over sealing flange of door seal section, see section A-A..

1 - Trim

- Removing
  - Remove upholstery ⇒ Page 70-45 and seat belt cover ⇒ Page 70-48 .
  - Loosen lower screw of upper C-pillar trim.
  - Loosen sill trim in rear section from clips and pull up.
  - Remove screws - 2 - and plastic nut - 4 -.
  - Pull off trim from below and up from sealing flange and remove from under C-pillar trim.

70-44

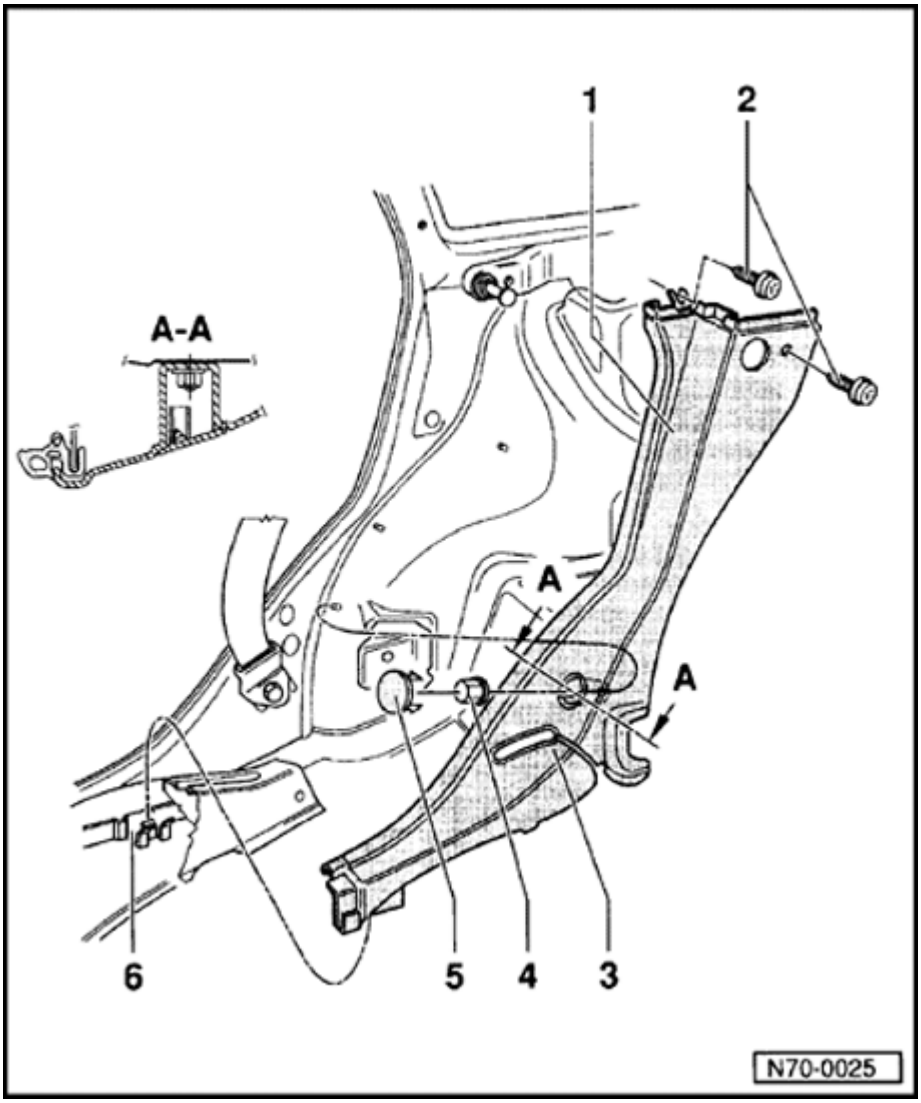

2 - Screw

3 - Safety belt opening

- Slotted

4 - Plastic nut

5 - Cover

- Only for vehicles without additional upholstery.
- Unclip.

6 - Clip

70-45

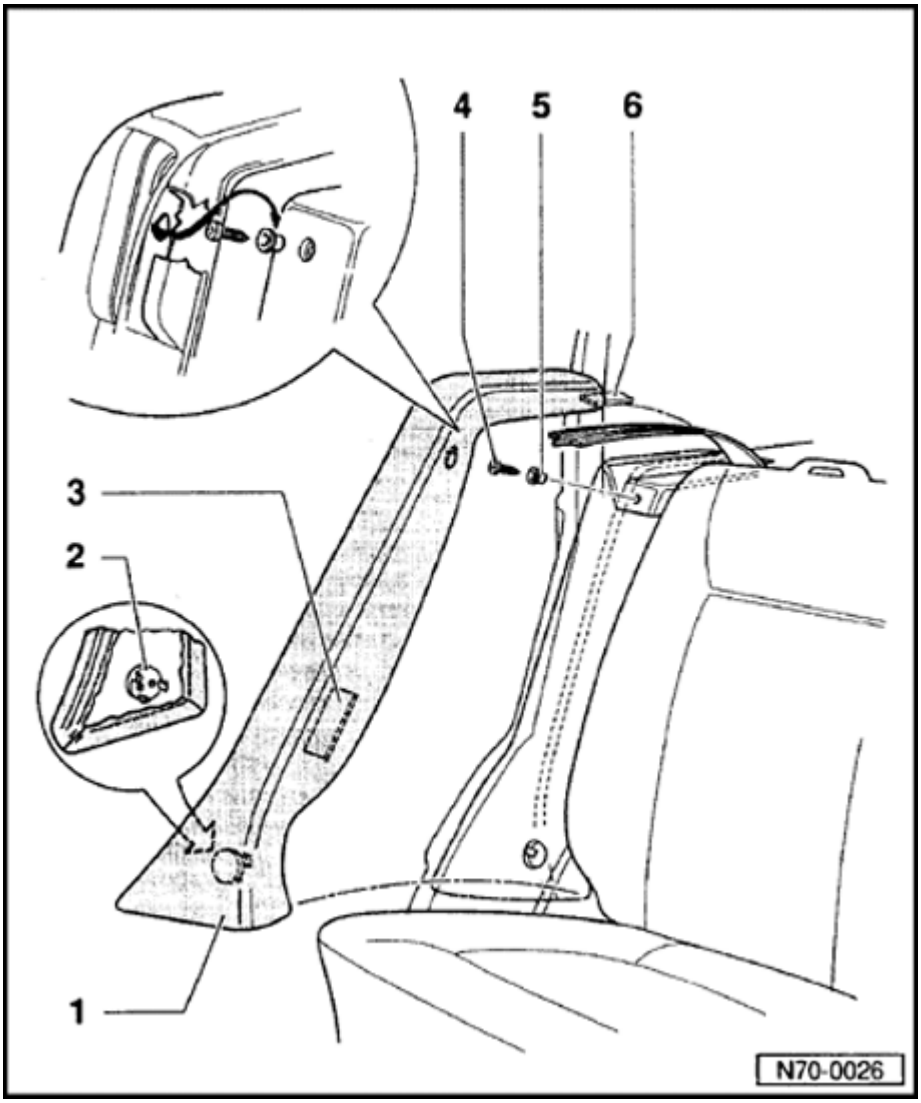

Lower C-pillar upholstery, removing and installing

1 - Upholstery

- To remove, unhook upholstery on top, pull off lower C-pillar trim and unclip lower section.

2 - Clip

3 - Velcro strip

4 - Screw

5 - Insert

6 - Tongue

70-46

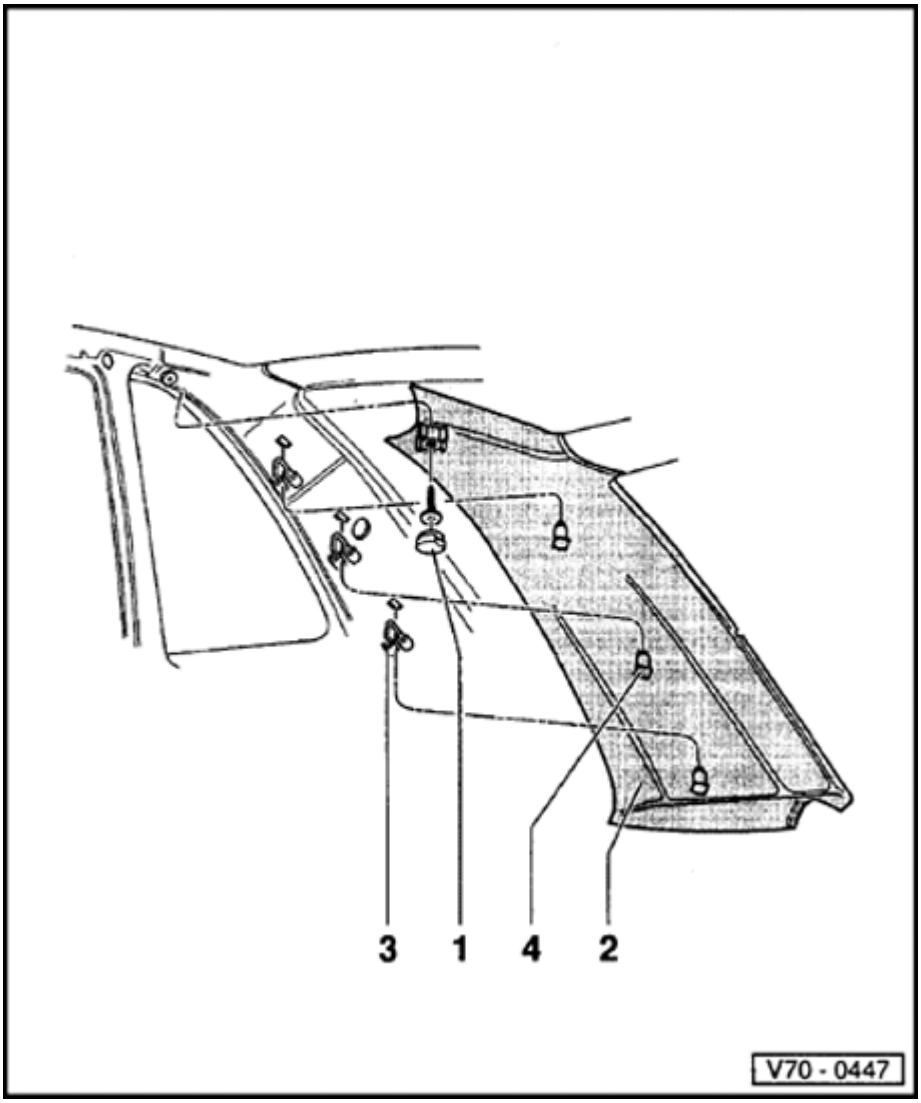

D-pillar trim (Sedan), removing and installing

1 - Cover cap

2 - Trim

- Removing
- Remove screws and pull out from spring clips.

3 - Spring clip

4 - Retaining pin

70-47

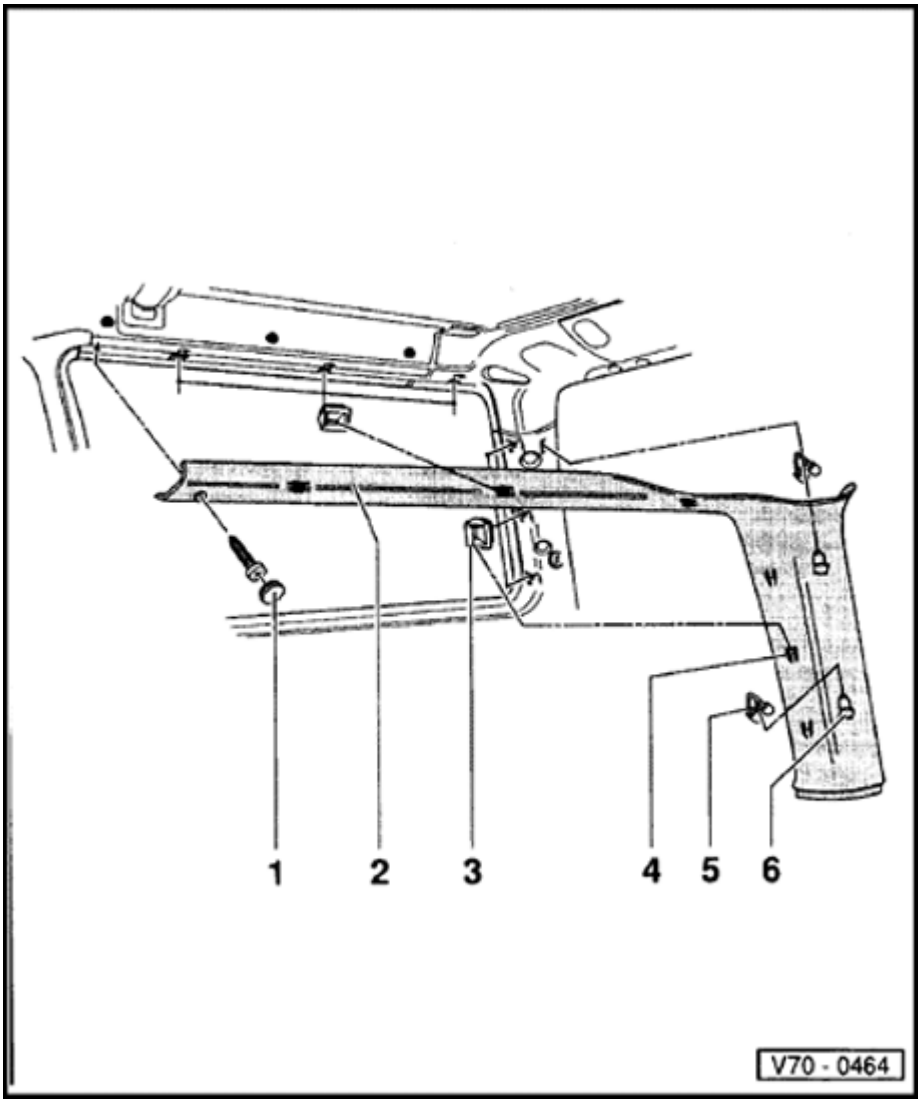

D-pillar trim, removing and installing (Wagon)

1 - Cover cap

2 - Trim

- Removing
- Remove screws, starting from front pull out of clips and spring clips.

3 - Clip

4 - Retaining clip

5 - Spring clip

6 - Retaining pin

70-48

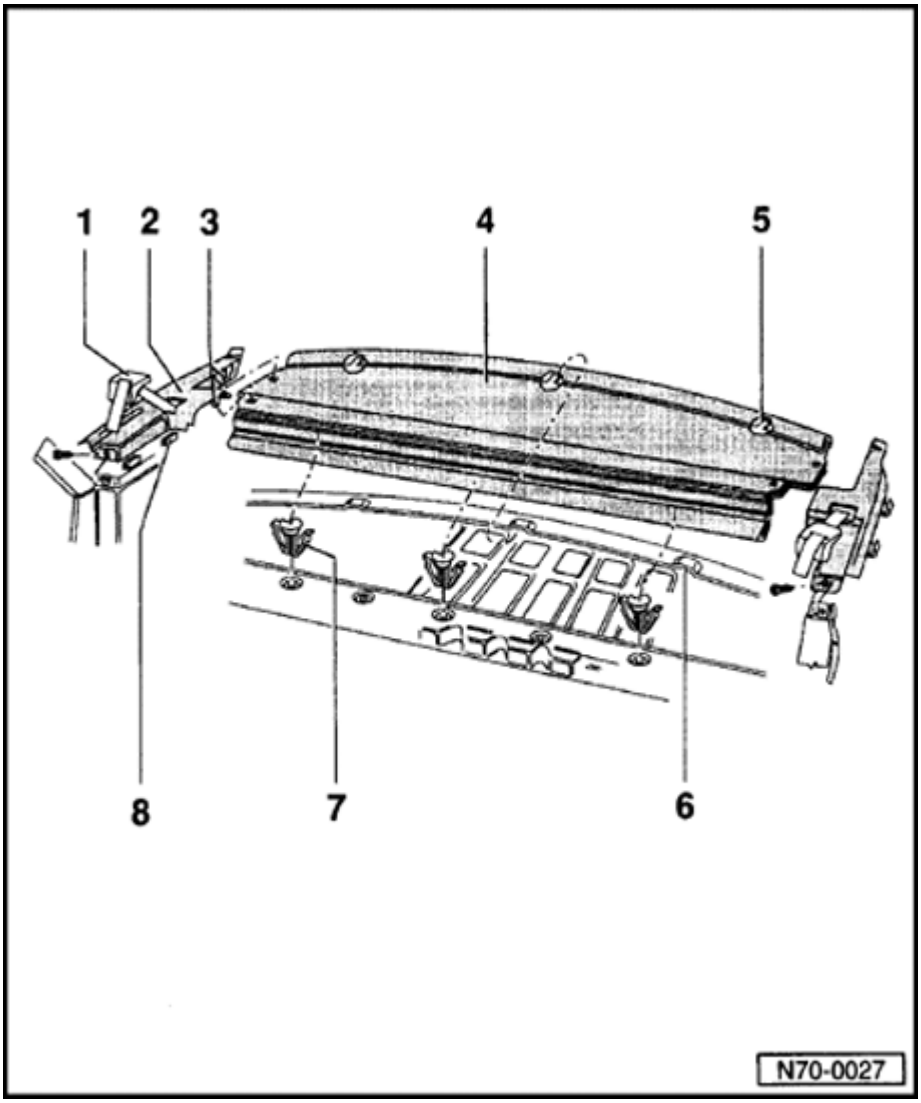

Rear shelf and belt retractor cover, removing and installing (Sedan)

1 - Belt guide

- Removing ⇒ Page 70-50
- Installing: install on belt retractor.

2 - Cover for belt retractor

- Removing
- Remove screw and lift out cover upward.
- Note retaining clips and retaining pins.
- For vehicles with upholstered C-pillar trim, removing ⇒ Page 70-45
- Installing:
- Position locking lugs of rear shelf and retaining clips and press down.

70-49

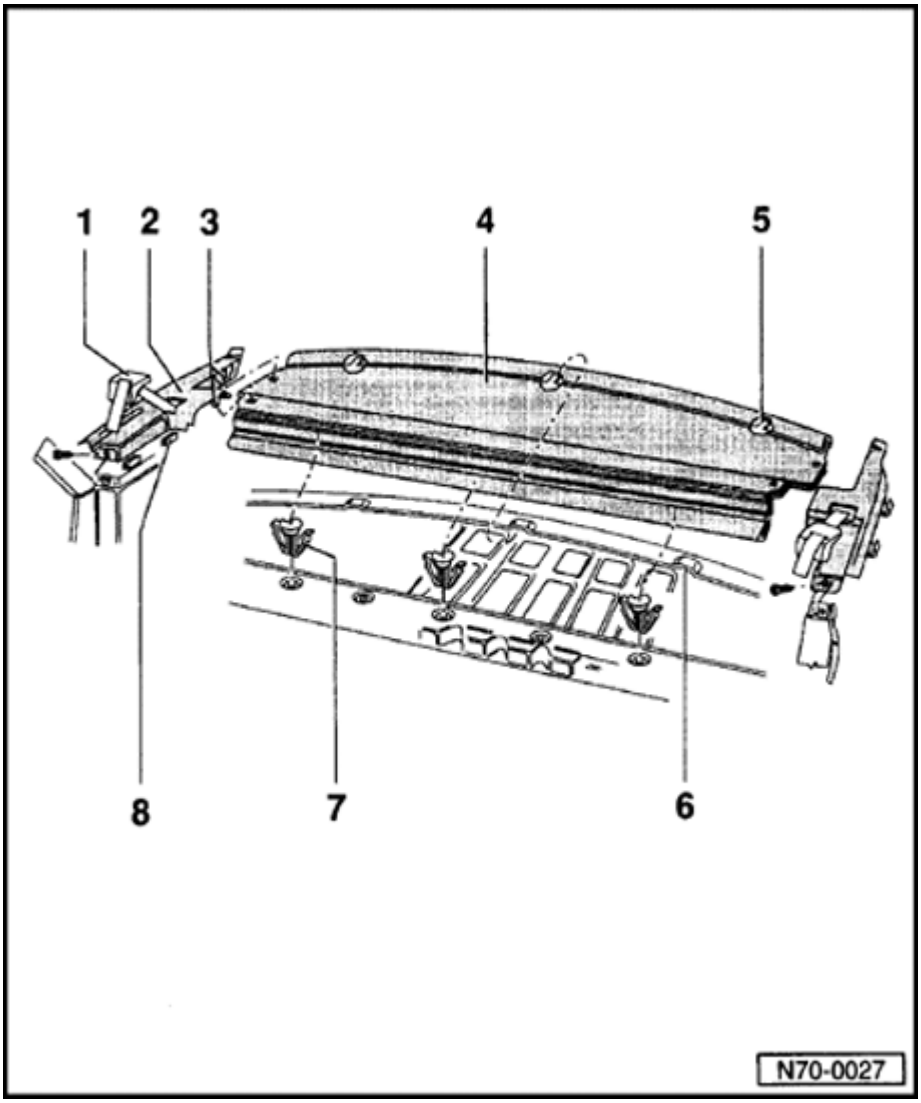

3 - Retaining lugs

- Clip into rear shelf panel

4 - Rear shelf

- To remove, first remove covers for belt retractors.
- Removing
- Unclip rear shelf panel upward and lift out of retaining lugs.
- Installing:
- Insert rear shelf panel with retaining lugs into retaining pockets and clip at front.

5 - Retaining lugs

6 - Retaining pockets

7 - Clip

8 - Retaining clip

- Installed on flange (side window).

70-50

Belt guide, removing

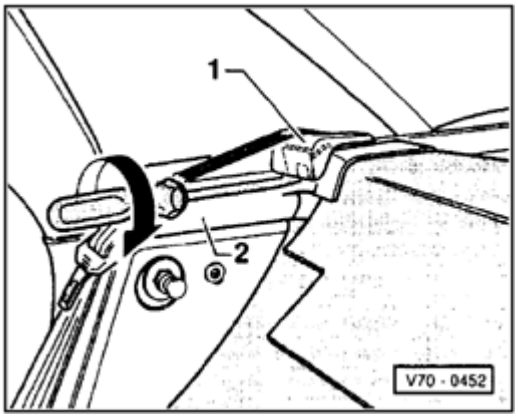

- Insert screwdriver between belt guide -1- and cover for belt retractor -2- into removal hole for belt retractor.
- Pry off belt guide -1- from belt retractor by twisting screwdriver.

70-51

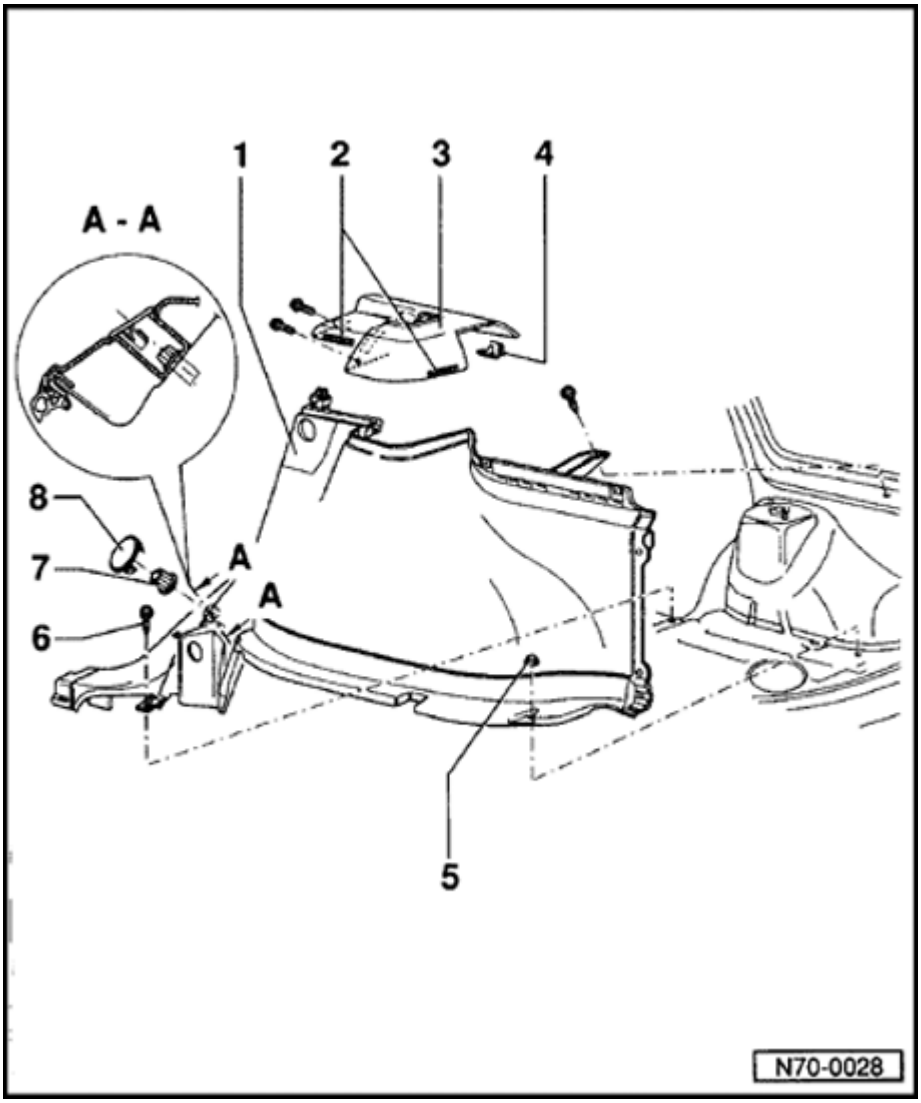

Front luggage compartment trim and belt retractor cover, removing and installing (Wagon)

Note:

The trim fits over sealing flange of door seal section, see section A-A..

1 - Trim

- Removing
  - Remove belt retractor cover, rear luggage compartment trim and backrest.
  - Loosen lower screw on C-pillar trim.
  - Lift inner sill panel trim at rear by disengaging clips.

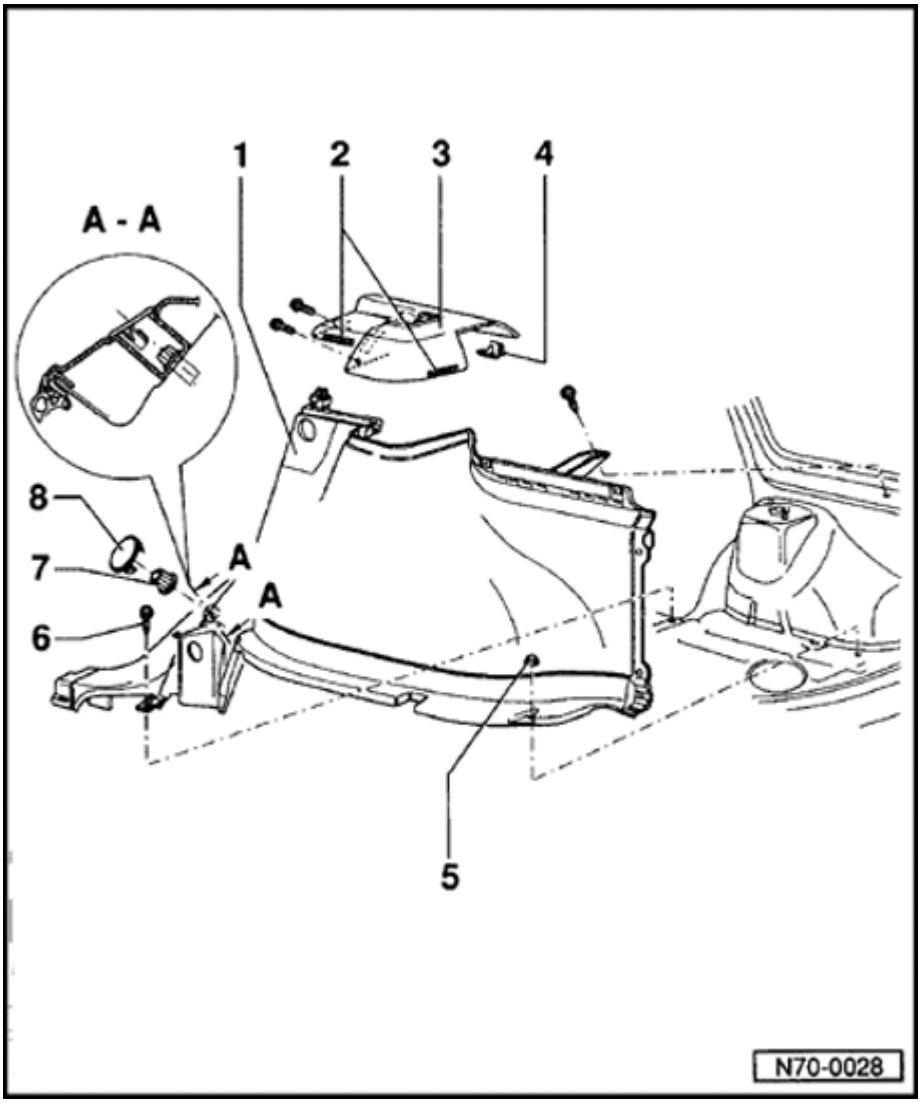

2 - Felt strip

3 - Belt retractor cover

- Removing belt guide ⇒ Page 70-50
- If installed, remove lower C-pillar upholstery ⇒ Page 70-45

4 - Retaining clip

- Installed on flange (side window).

5 - Nut

6 - Plug

7 - Plastic nut

8 - Cover

- Unclip.

70-53

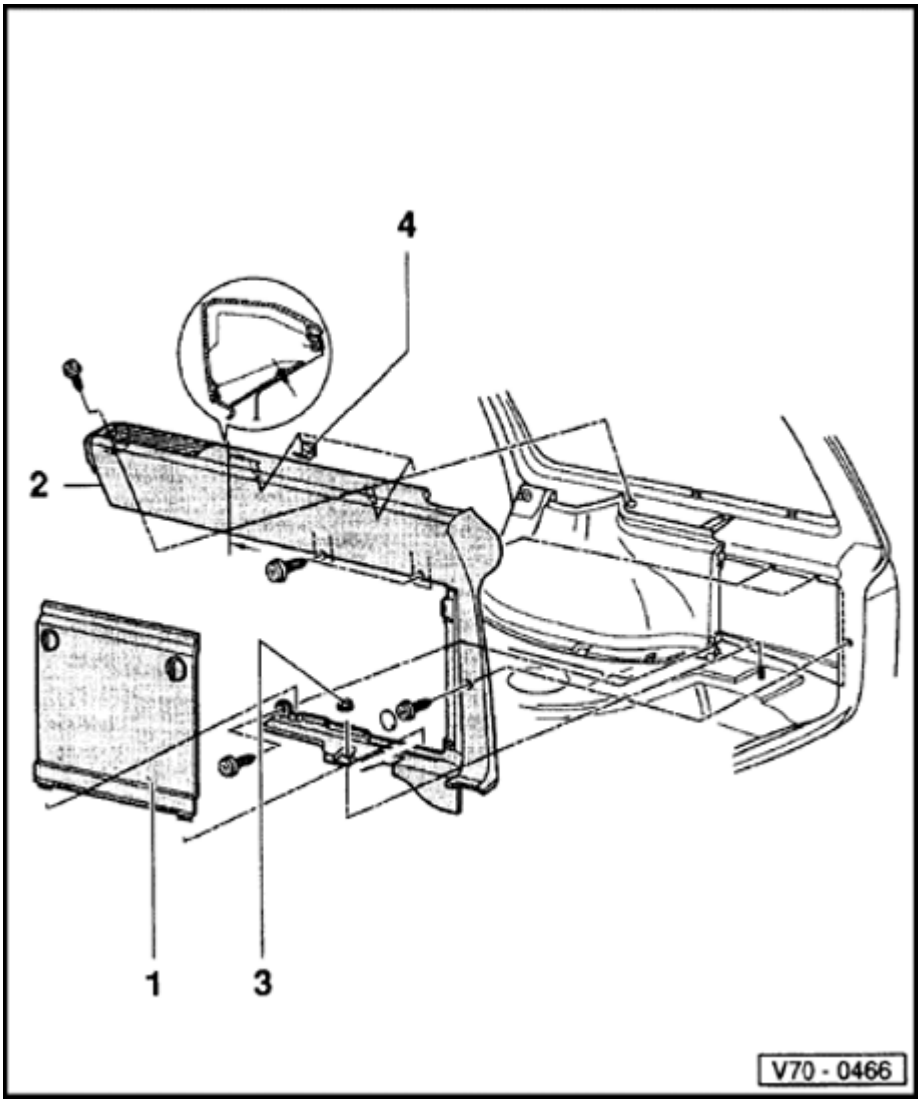

Rear luggage compartment trim, removing and installing (Wagon)

1 - Cover

2 - Trim

- To remove, remove belt retractor cover.
- On vehicles with luggage compartment cover, pull cover off guide rails and then remove applicable guide rail.
- Rear luggage compartment trim is installed on front luggage compartment trim. See sectional view.

3 - Nut

4 - Retaining clip

- Installed on flange (side window).

70-54

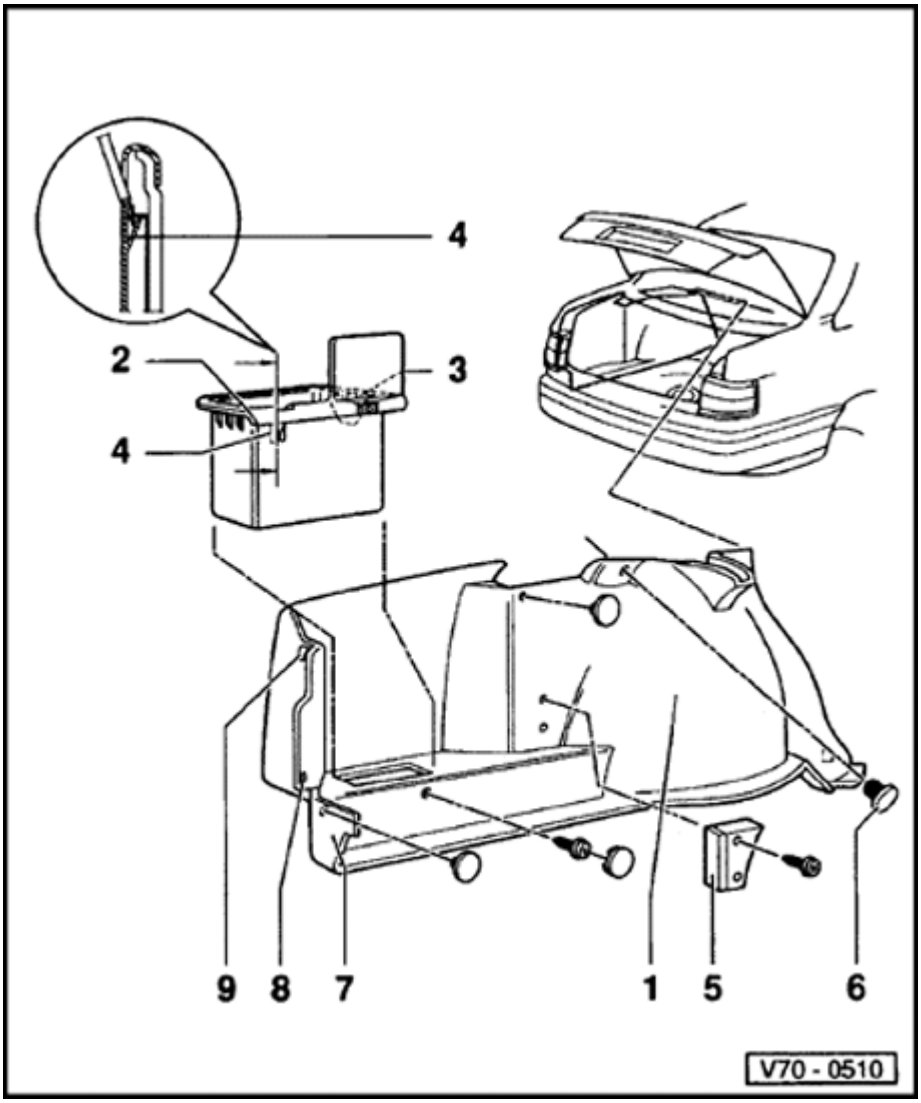

Luggage compartment side trim, (Sedan)

1 - Trim

- Removing
  - Remove rear bench seat ⇒ Page 72-32 .
- Remove storage box and pry out plugs.
  - Remove lower part of C-pillar trim ⇒ Page 70-56 .

2 - Storage box

- Removing Remove screws, press carpet support - 3 - toward rear and release locking lug - 4 -.

3 - Carpet support

4 - Locking lug

- Release from above using screwdriver.

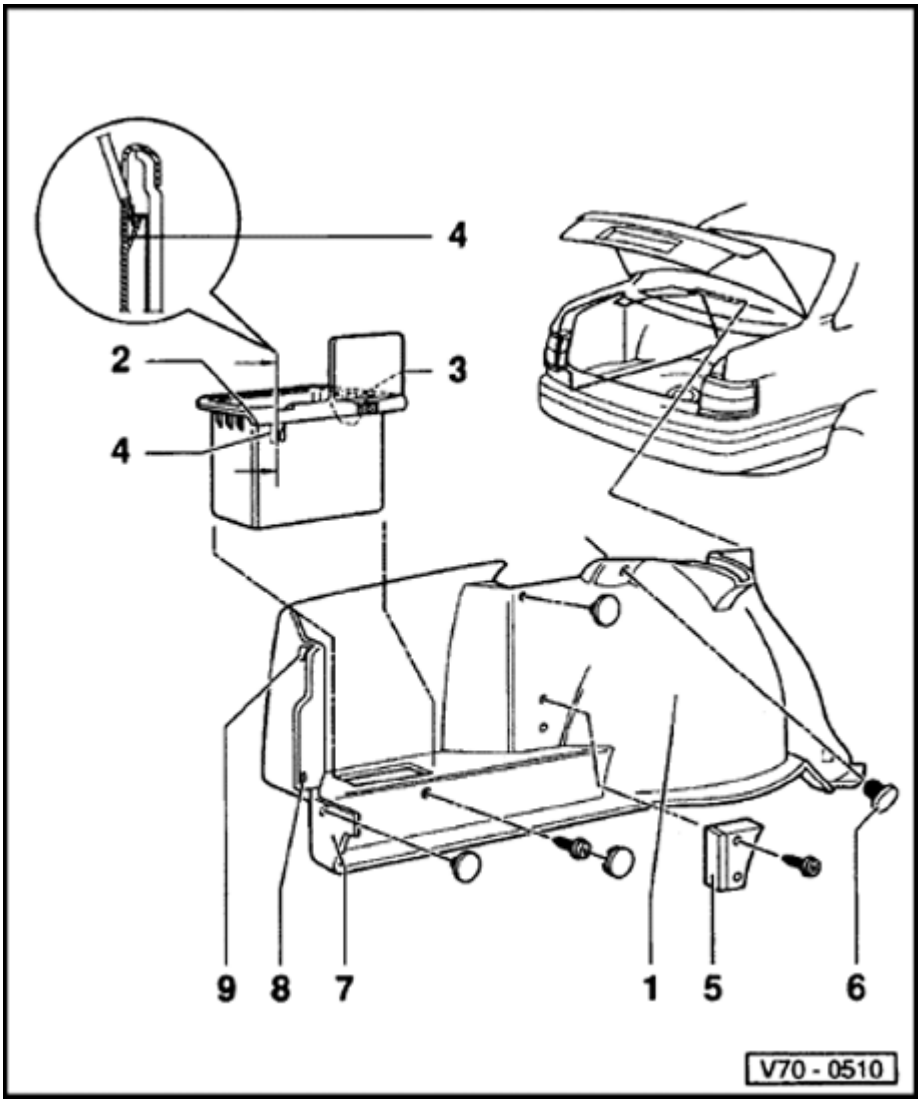

5 - Warning triangle retaining bracket

6 - Plug

- Pry out using special tool 80-200.

7 - Tab

- Installation position ⇒ Attaching rear trim ⇒ Page 70-56 .

8 - Mounting hole

- Installation position ⇒ Attaching rear trim, ⇒ Page 70-56 .

9 - Velcro strip

- Installation position ⇒ Attaching rear trim ⇒ Page 70-56 .

70-56

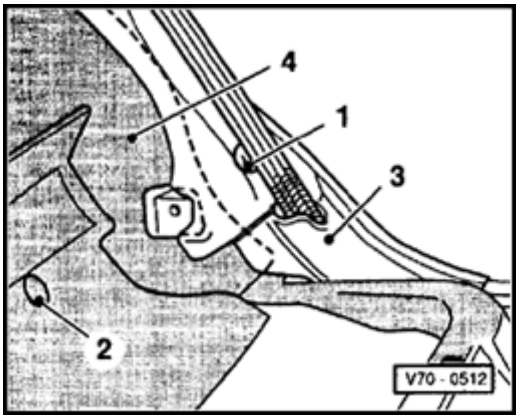

Trim, removing

- Unclip inner sill cover at rear and pull up ⇒ Page 70-61 .
- Remove cover cap -1- and remove nut under it.
- Remove plug -2- and lift floor covering.
- Slightly lift up C-pillar trim at floor and pull out luggage compartment trim -4-.

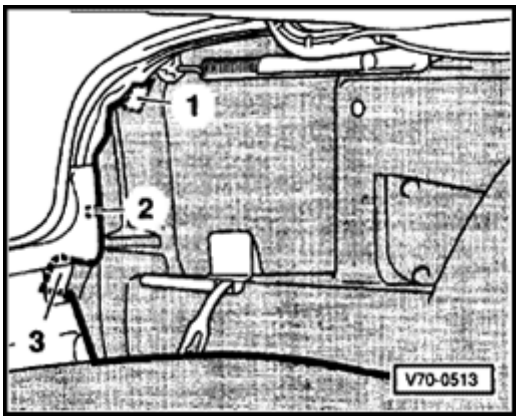

Rear trim, attaching

1 - Velcro strip

2 - Metal lug

3 - Plug-in tab

70-57

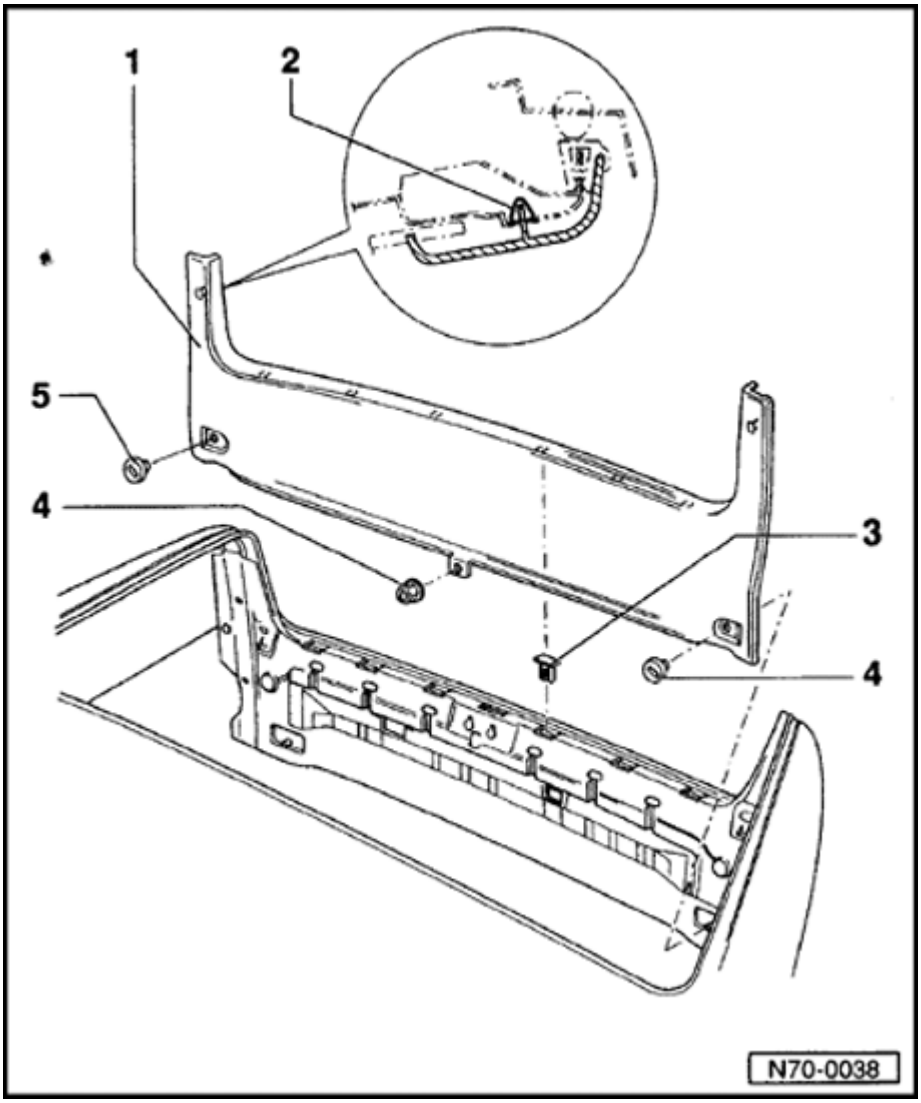

Rear lock carrier trim, removing (Sedan)

1 - Lock carrier trim

- Removing
  - Remove plugs -5- and nuts -4-.
  - Pry out trim at top from spring lugs -2- and unclip.

2 - Spring retaining clip

3 - Clip

- Six clips.

4 - Plastic nut

5 - Plug

70-58

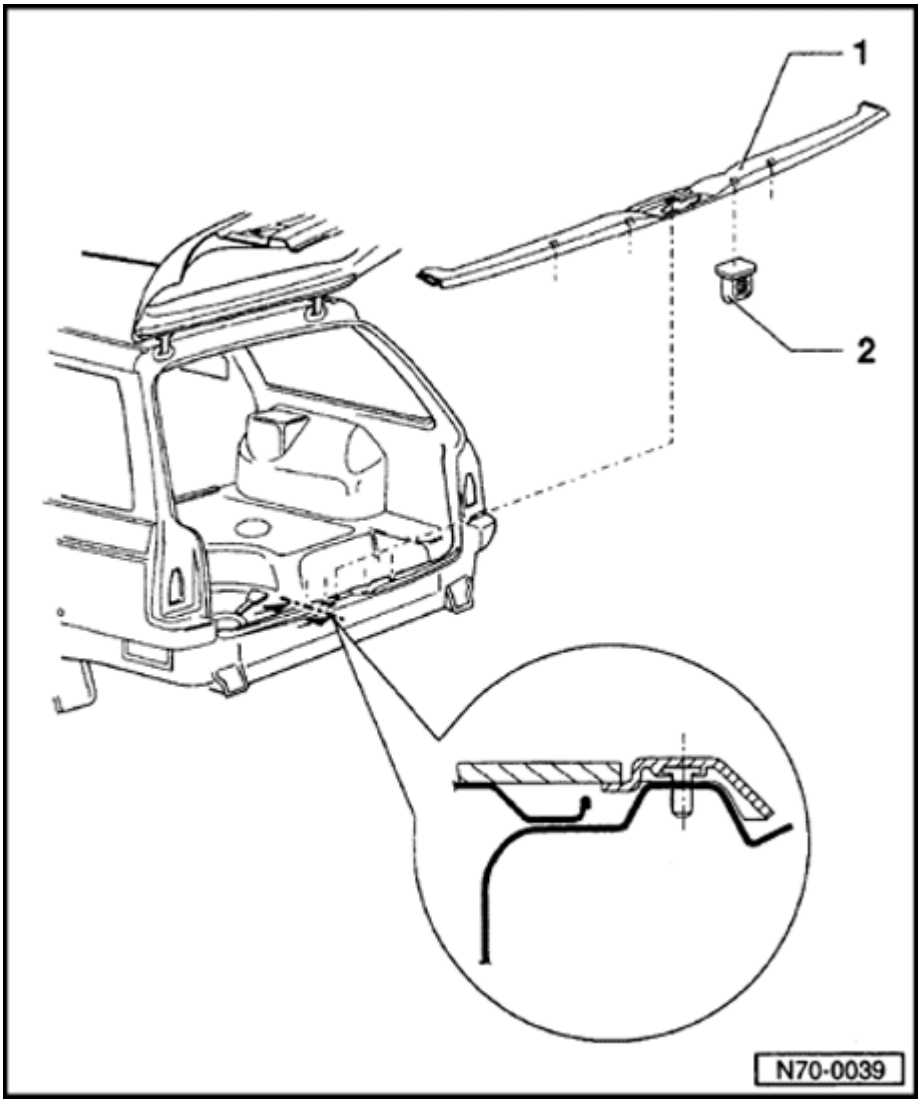

Rear lock carrier trim, removing (Wagon)

1 - Lock carrier trim

- Removing
  - Unclip left and right trim and remove side tabs.
  - Tilts cover froward and unclip together with center clip upward.

2 - Clip

- Five clips.

70-59

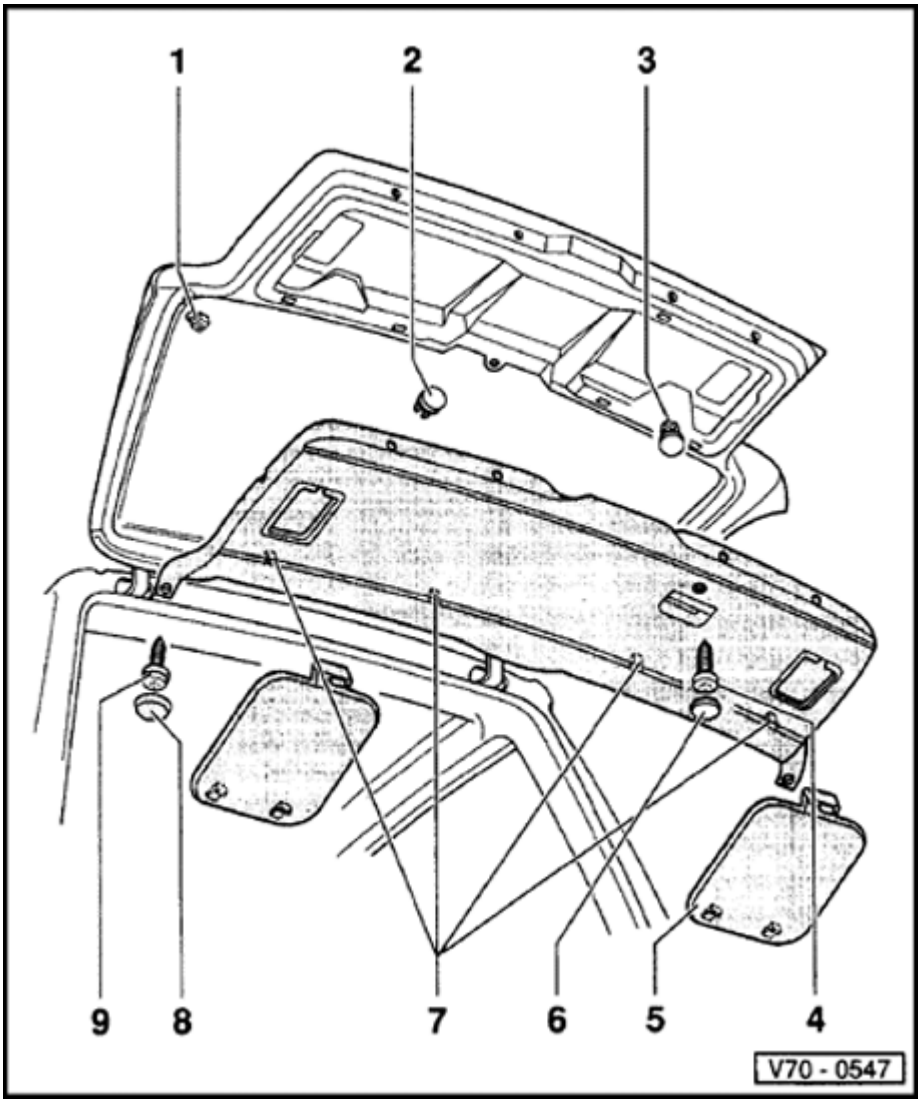

Tailgate trim, removing and installing (Wagon)

1 - Clip

- Removing
- Turn clip 45° and remove.

2 - Spreader clip

- Remove spreader pin.

3 - Spreader nut

4 - Self-tapping screw

5 - Cover

6 - Cover

7 - Retaining lugs

8 - Cover

9 - Self-tapping screw

70-60

Tailgate hinge cover cap, removing and installing (Wagon)

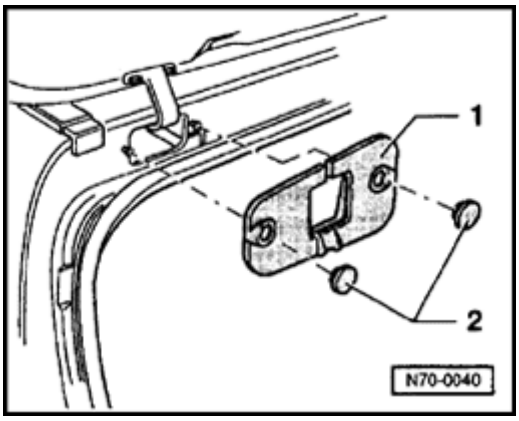

- Pry out plug -2- with screwdriver.
- Remove cap -1- from hinge (slotted on top).

70-61

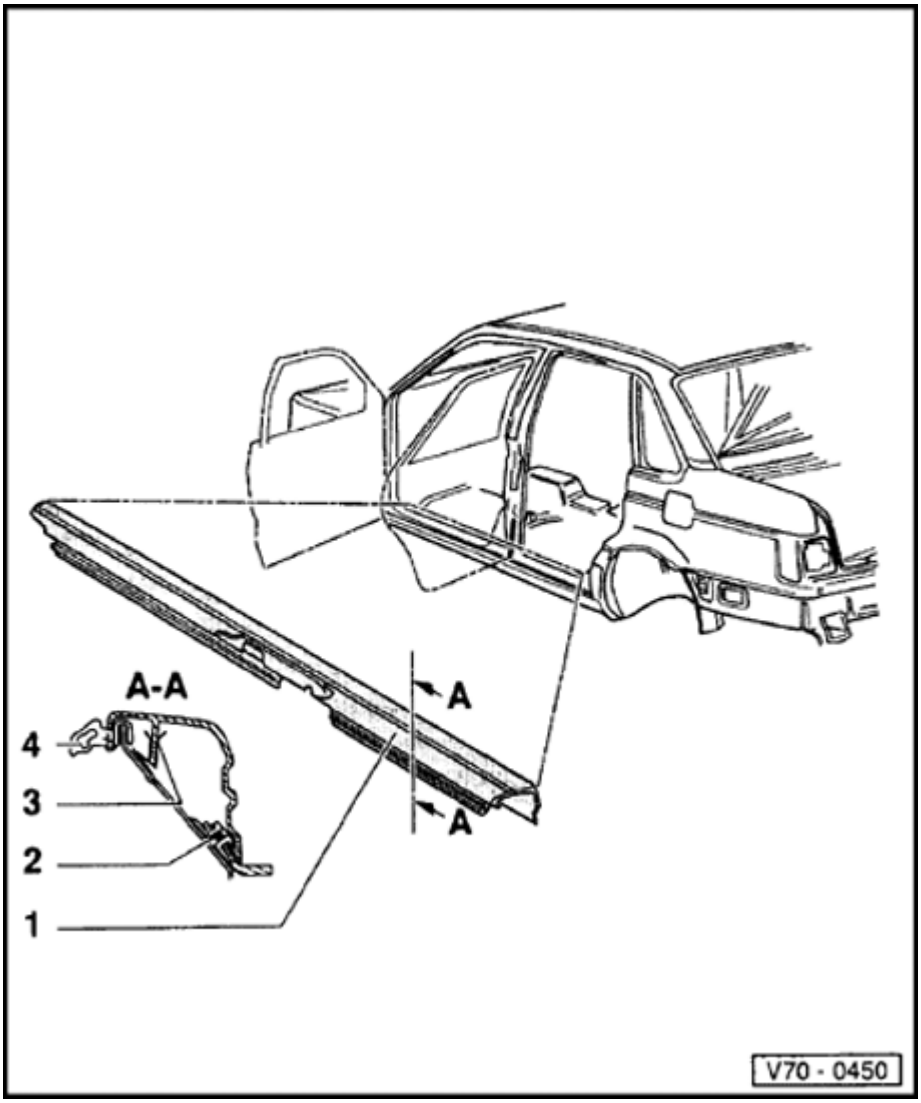

Sill cover, removing and installing

1 - Sill cover

- Removing
- Press down, unclip and pull up from clip.
- Installing:
- Check position of sill cover at door seals.

2 - Clip

3 - Retainer

4 - Door inner seal

Headliner

Molded headliner, removing and installing (Sedan)

Removing

- Remove trim of A-pillar, B-pillar, upper C-pillar and D-pillar.

- Remove interior light.

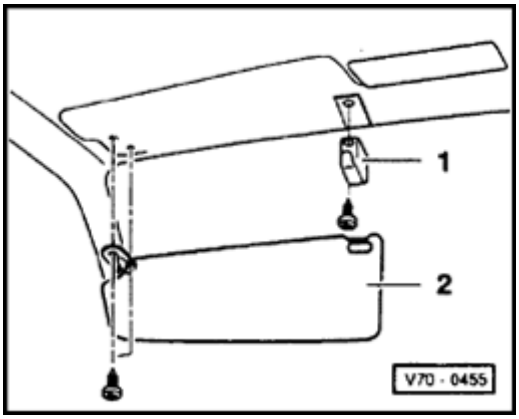

- Remove sun visors -2-. With illuminated mirrors also disconnect connector in roof frame.
- Remove screw from mounting bracket -1- , turn 90° and remove from roof frame.

70-63

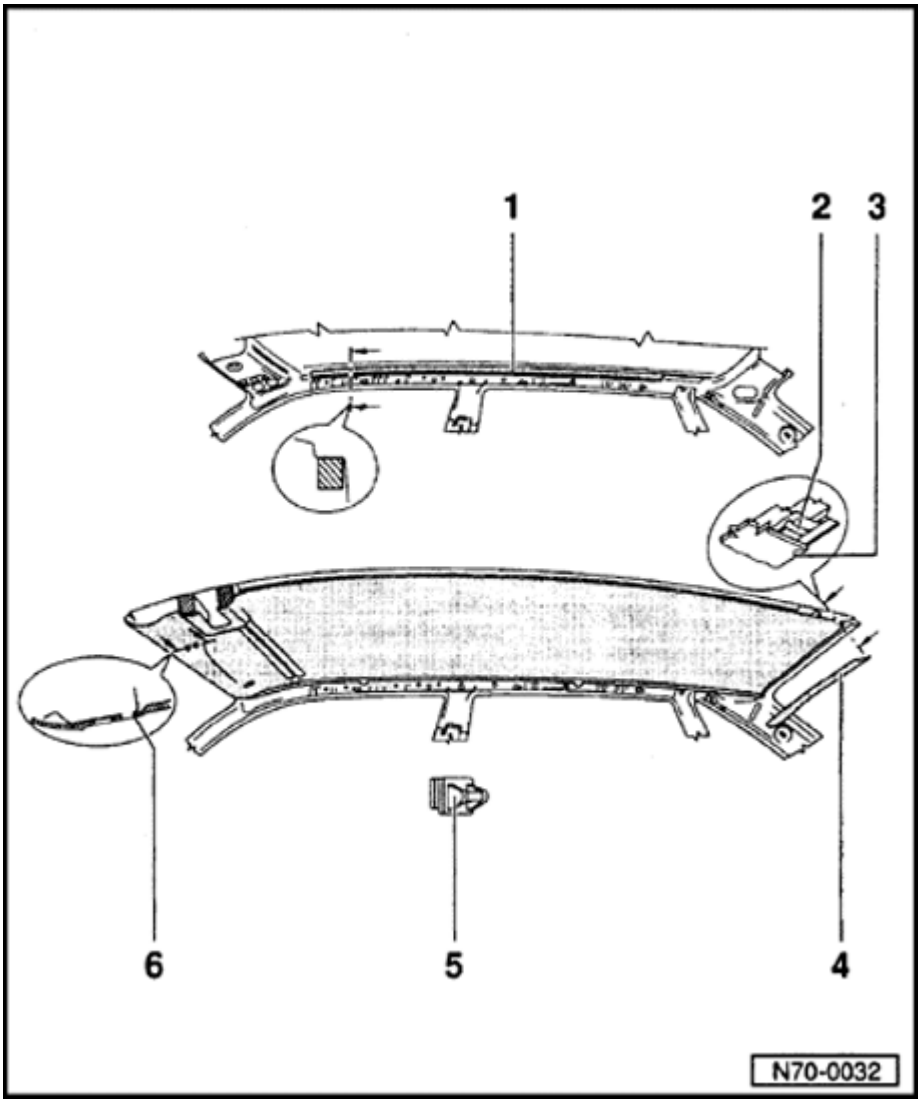

- Pull end strip -4- (clipped on) and pull down from roof frame.
- Remove clips -5- from roof frame.
- Turn down passenger s seatback and remove headliner dioganally through right rear door opening.

Installing

- Check foam strip -1- for good adhesion on roof, re-glue if necessary.
- Align headliner at front with sunvisor mountings -6- and at rear using center marking -3- and indentation -2-.

70-64

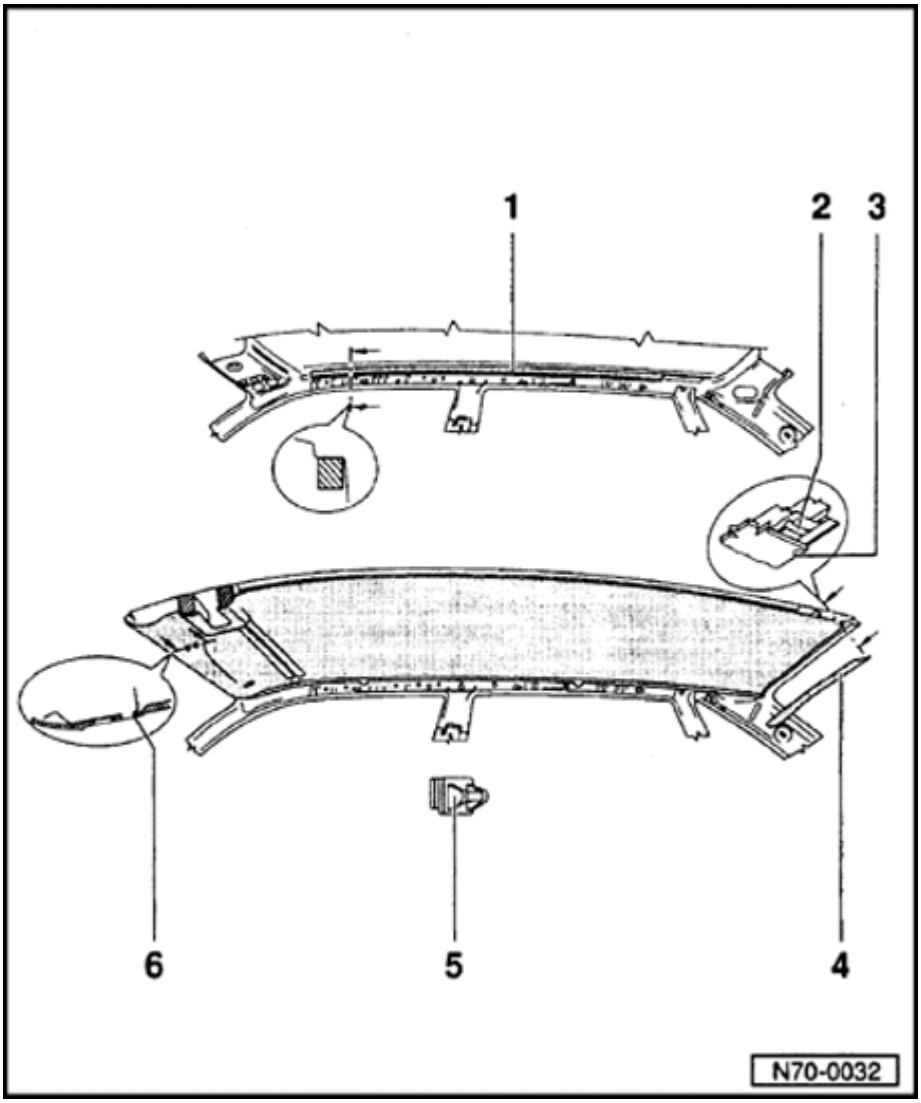

- Fasten headliner at front with sun visors.
- Insert clips -5-. Clips will hold headliner in position.
- Press in end strip -4- in roof frame.
- Install all other components.

70-65

Molded headliner with sunroof, removing and installing (Sedan)

Removing

- Remove trim for A-pillar, B-pillar, upper C-pillar and D-pillar.

- Remove interior light.

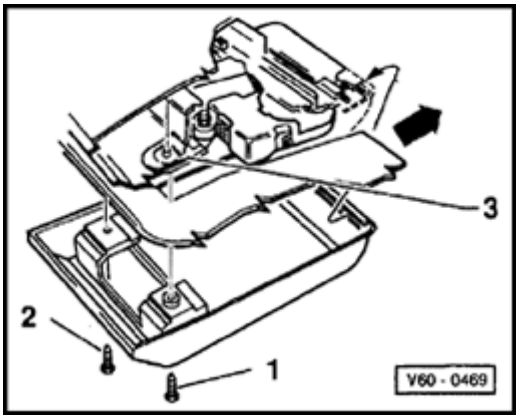

- Remove cover for sunroof drive.
- With sunroof open, remove weather strip around sunroof opening.

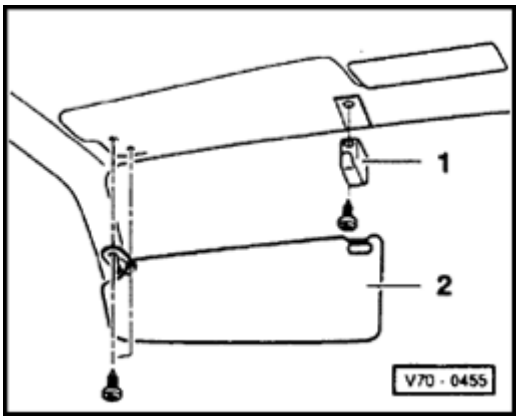

- Remove sunvisors -2-. With illuminated mirrors also disconnect connector in roof frame.
- Remove screw from mounting bracket -1- , turn 90° and remove from roof frame.

70-66

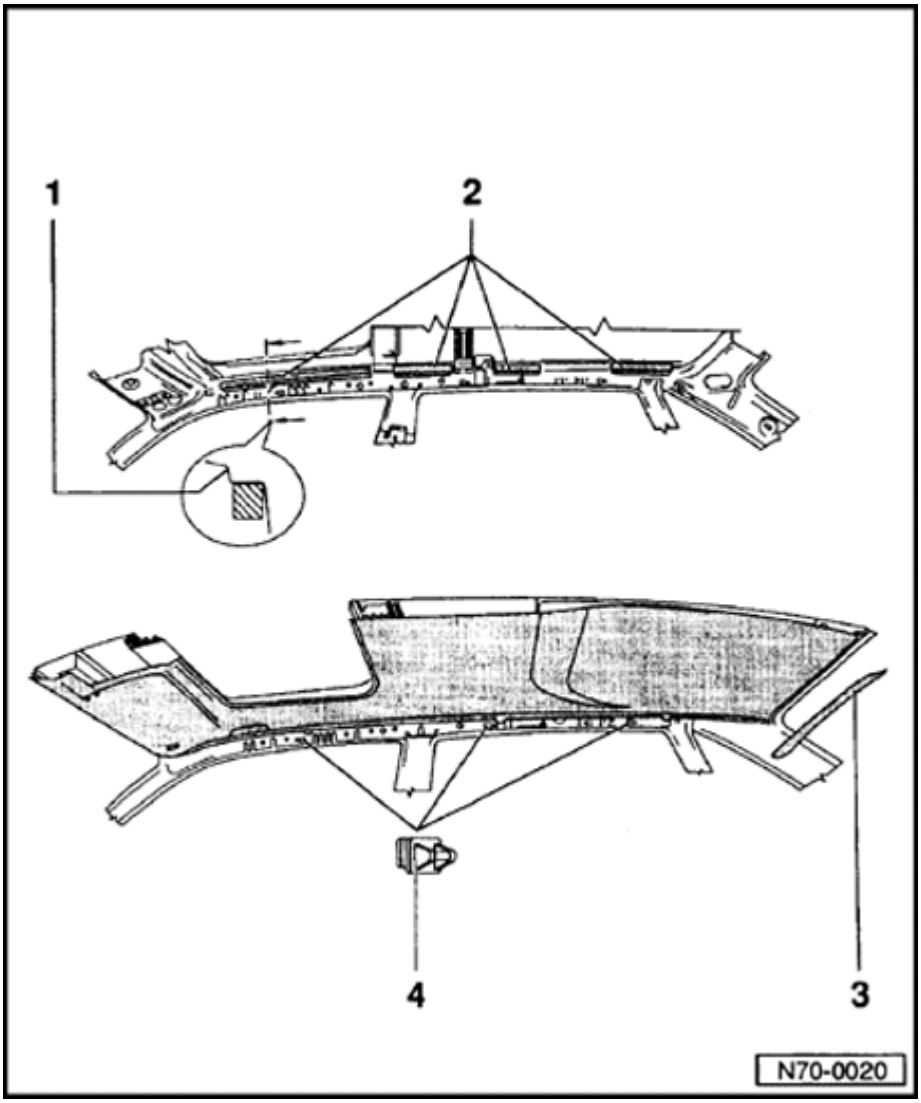

- Pull end strip -3- (clipped on) and pull down from roof frame.
- Remove clips -4- for trim from roof frame.
- Turn down passenger s seatback and remove headliner diagonally through right rear door opening.

Installing

- Check foam strip -2- for good adhesion on roof and re-glue if necessary using adhesive D 001 200.
- Align front of headliner with sunvisor mountings and front sunroof opening.
- Insert clips -4-. Clips hold headliner in position.
- Install all other components.

70-67

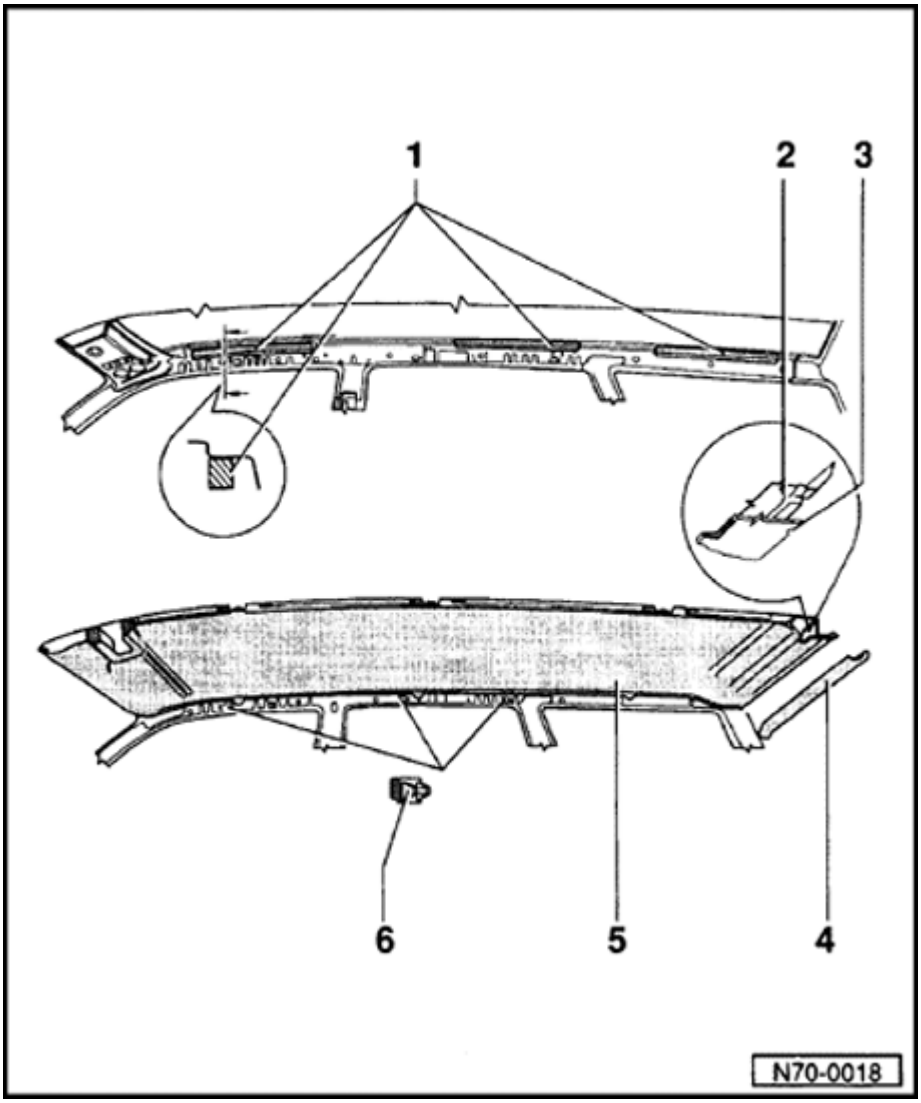

Headliner, removing and installing (Wagon)

Note:

To remove, first remove trim for A-pillar, B-pillar, C-pillar , D-pillar, sun visors and interior light.

1 - Foam strip

- Check for firm adhesion and re-glue if necessary with adhesive D 001 200.

2 - Center marking in roof frame (indentation)

3 - Center marking in headliner (notch)

4 - End strip

- Clipped into roof frame.

70-68

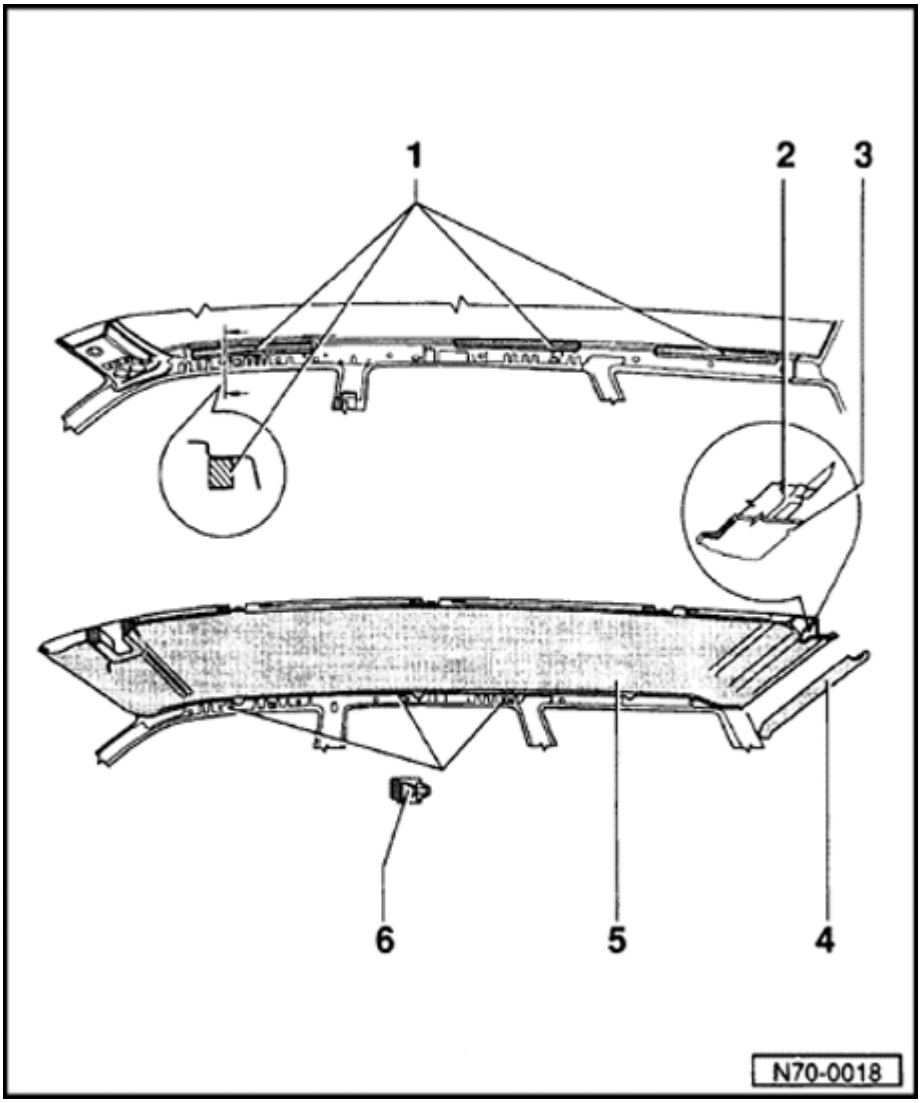

5 - Headliner

Removing

- Unclip end strip - 4 -, remove trim clips - 6 - from roof frame.

Installing:

- Position headliner and insert trim clips - 6 -.
- Align headliner at front with sun visor mountings, at rear using center markings - 2 - and - 3 - .
- Secure front of headliner with sun visors.

6 - Trim clip

- Holds headliner in position.

70-69

Headliner with sunroof, removing and installing (Wagon)

Removing

- Remove trim for A-pillar, B-pillar, upper C-pillar and D-pillar.

- Remove interior light.

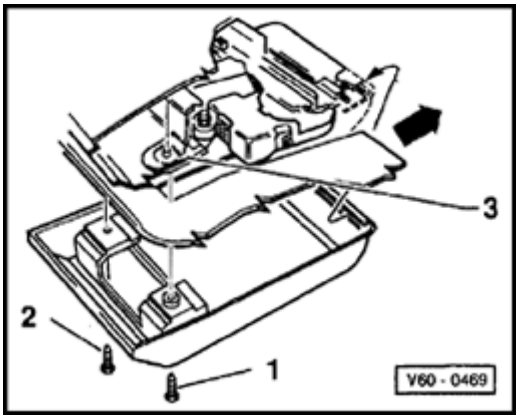

- Remove cover for sunroof drive.
- With sunroof open, remove weather strip around sunroof opening.

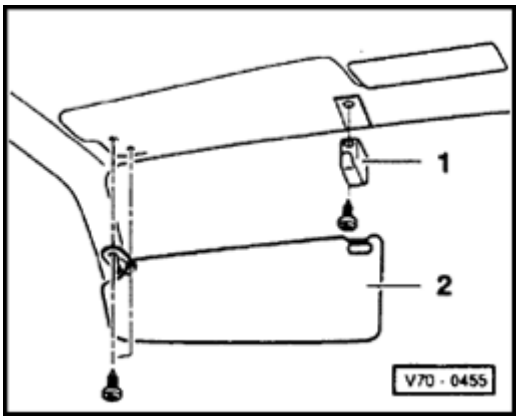

- Remove sun visors -2-. If equipped with illuminated mirrors also disconnect electrical connectors.
- Remove support -1-, turn 90° and remove from roof frame.

70-70

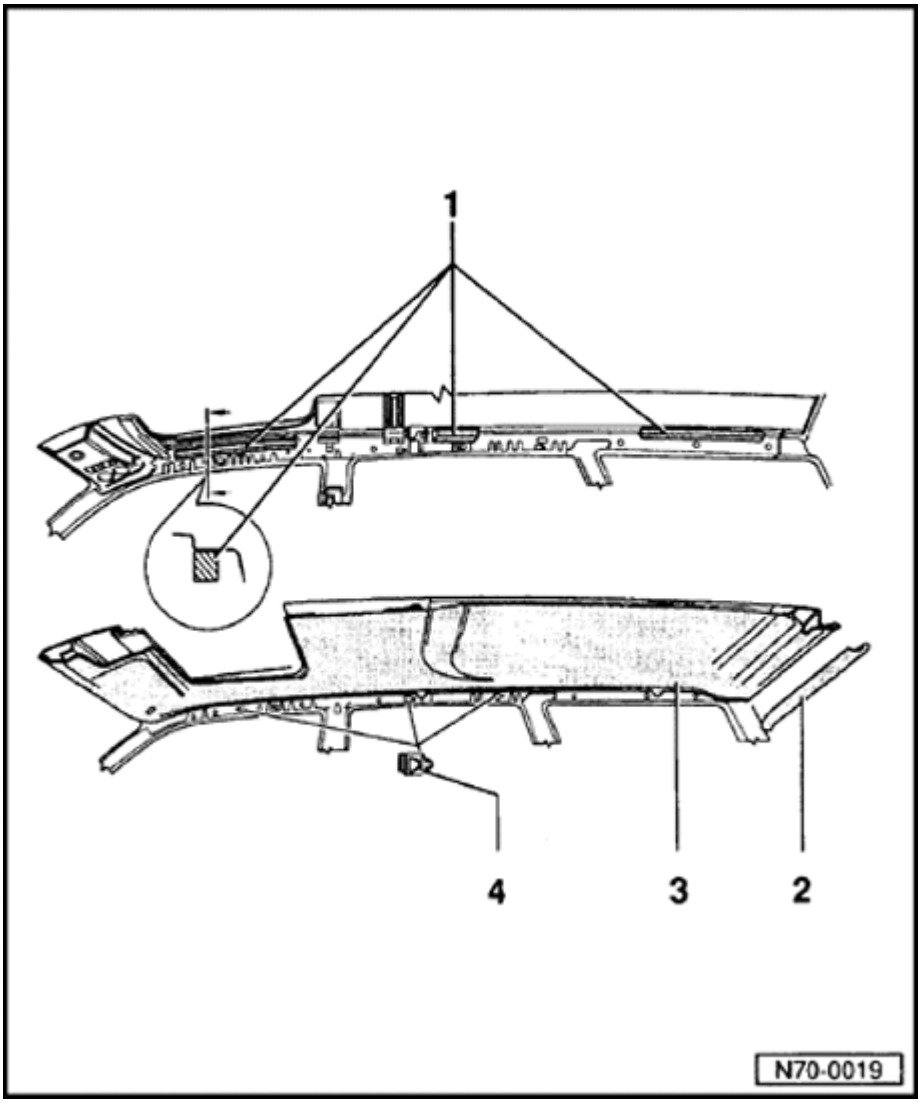

- Pull down end strip -2- (clipped on) from roof frame.
- Remove clips -4- for trim from roof frame.

Installing

- Check foam strip -1- on roof for good adhesion and if necessary glue on with adhesive D 001 200.
- Align headliner -3- at front with mountings for sun visor and front edge of sunroof opening.
- Install clips -4-. Clips hold headliner in position.
- Install all other components.

70-71

Roof dampening / reinforcement, removing and installing

Notes:

- *The function of roof reinforcement and dampening is accomplished by material glued to the roof.*
- *For sheet metal work on the roof, the dampening/reinforcement material can be cut out. The cut-out area must not be larger than 1000 cm^2 155 $in.^2$ (example: 40 cm x 25 cm or 15.5 in. x 9.8 in.).*
- *The cut-out area must be replaced after completion of the repair. If the cut-out area must be larger than 1000 cm^2 across or lengthwise through the dampening/ reinforcement material, then the entire material must be replaced.*

Required tools:

- Carpet roller, approx. 150 to 200 mm wide
- Notched putty knife (tooth height 2 to 3 mm)
- Carpet utility knife
- Hot air gun

70-72

Required materials:

- Adhesive D 190 MKD A3

Removing

- Make cuts in dampening/reinforcement material across roof.
- Cut material in approx. 100 mm wide strips in lengthwise direction.
- Pull off strips one by one from roof, starting in center and proceeding to outside. Support roof with one hand while pulling.

CAUTION!

If the paint is damaged when cutting with the utility knife, it is important that the damaged area is protected against corrosion using primer ALN 00 003 04.

The remaining paper sticking to the roof can be removed easily with a heat gun. Small pieces of the paper can be removed with a scraper. Small remaining residue does not need to be removed.

CAUTION!

Do not use heat gun temperature higher than 100° C (1 ° F) or the paint will be damaged.

Installing

- Apply adhesive to dampening/reinforcement material and spread with commercially available notched scraper. The adhesive temperature must not be below + 20° C (68° F).

- Clean excess adhesive immediately with water. Partly cured adhesive can be cleaned with spot remover (ethylacetate, etc.). Completely cured adhesive cannot be removed.

- Let adhesive flash off at 20° C (68° F) for about 30 minutes. Finger test: adhesive must no longer pull strings.

- If work is interrupted for some reason, scrape adhesive off immediately. That way material can be used again.

- Immediately before glueing, heat adhesive with a heat gun at about 60° C (140° F) for 2 to 3 minutes. Distance of heat gun nozzle from adhesive should be 200 to 300 mm (8 to 12 in.).

- Position and center dampening / reinforcing material.

- Starting from rear, roll on material over entire area.

70-74

Sedan

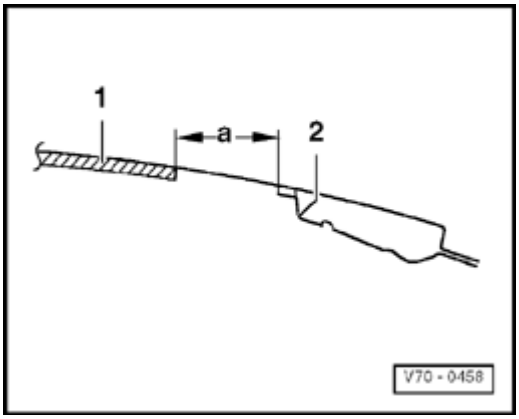

a = 55 mm (2.1 in.)

1 - Dampening / reinforcing material

2 - Roof frame, rear

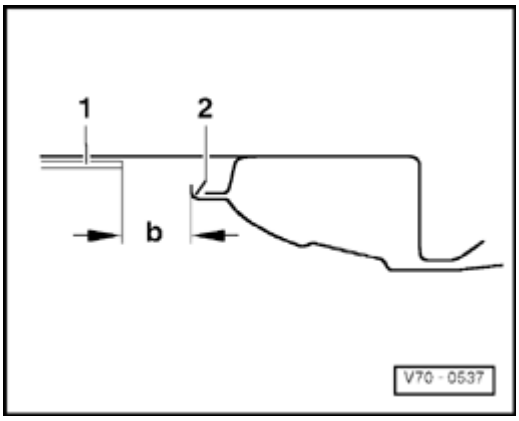

Wagon

b = 43 mm (1.69 in.)

1 - Dampening / reinforcing material

2 - Roof frame, rear

Front seat

Front seat, removing

- Slide seat forward.

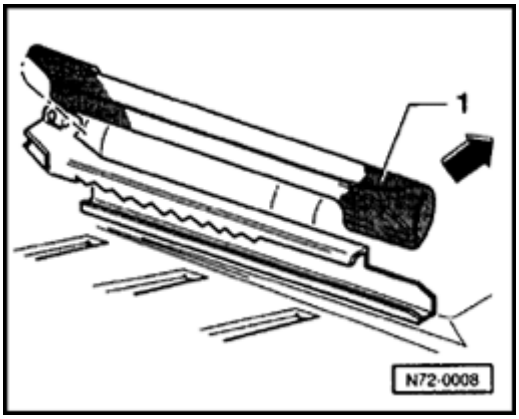

- Unclip cover strip -1- from seat rail and take out rearward and up.
- Remove cover at rear of opposite seat rail.

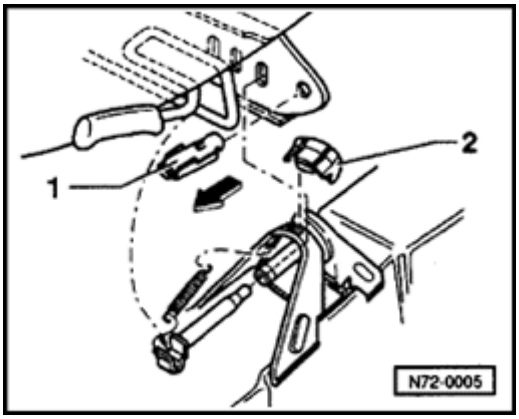

- Press clip -1- together and remove (arrow).
- Disconnect connector for heated seat (if so equipped).
- Release locking rod and slide to rear out of seat rails.

Note:

If seat fore and aft movement is difficult or if there is excessive play, check the sliding pieces at the rear of the seat or front -2- and replace them if necessary.

Seat and backrest frames, separating

- Remove front seat ⇒ Page 72-1 .

Note:

For seats with storage tray or deluxe seats, use the relevant detailed information describing standard or sport seats.

Standard and sport seats, seat outer side

A - Seat with height adjustment

B - Seat without height adjustment

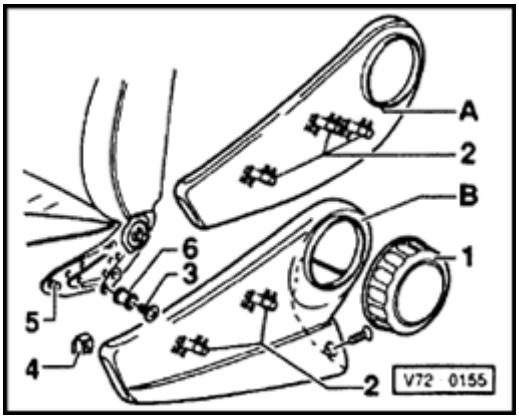

- Press off adjustment knob -1-.
- Drive left and right spreader pins -2- through to inside. Front spreader pin makes contact with seat frame. With screwdriver press pin from above downward.
- Remove screw -3-.
- Remove left and right lock washers.
- Remove seatback frame from pin -5-.
- Check bushings -6- (left and right) for damage and replace if necessary.

72-3

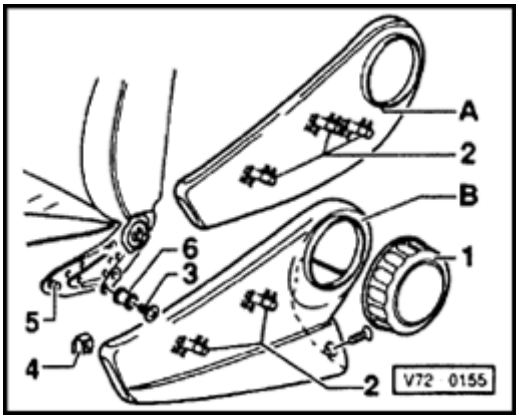

- Replace screw -3- (lock screw). Remove locking fluid residue in nut thread with thread tap. Coat new screw with locking fluid D 185 400 A2.

Standard and sport seat with storage shelf

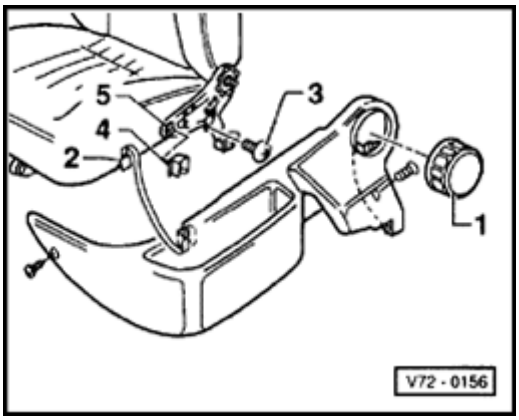

- Press off adjustment knob-1-.
- Remove screws and remove trim upward from bracket -2-.
- Remove screw -3-.
- Remove lock washer -4-.
- Disassemble seat inner side.
- Remove seat back frame from pin -5-.

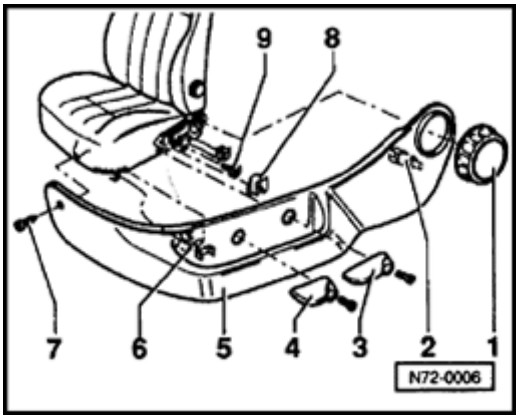

Deluxe seat

- Press off adjustment knob -1-.
- Drive spreader -2- out toward inside.
- Pull off adjustment controls -3- and -4- after removing screws.
- Remove screws -7-.
- Remove storage shelf -5- with retainer -6- from seat frame.
- Remove lock washer -8-.
- Remove screw -9-.
- Complete disassembly on inner side of seat.
- Remove seat frame from pins on left and right sides.

72-5

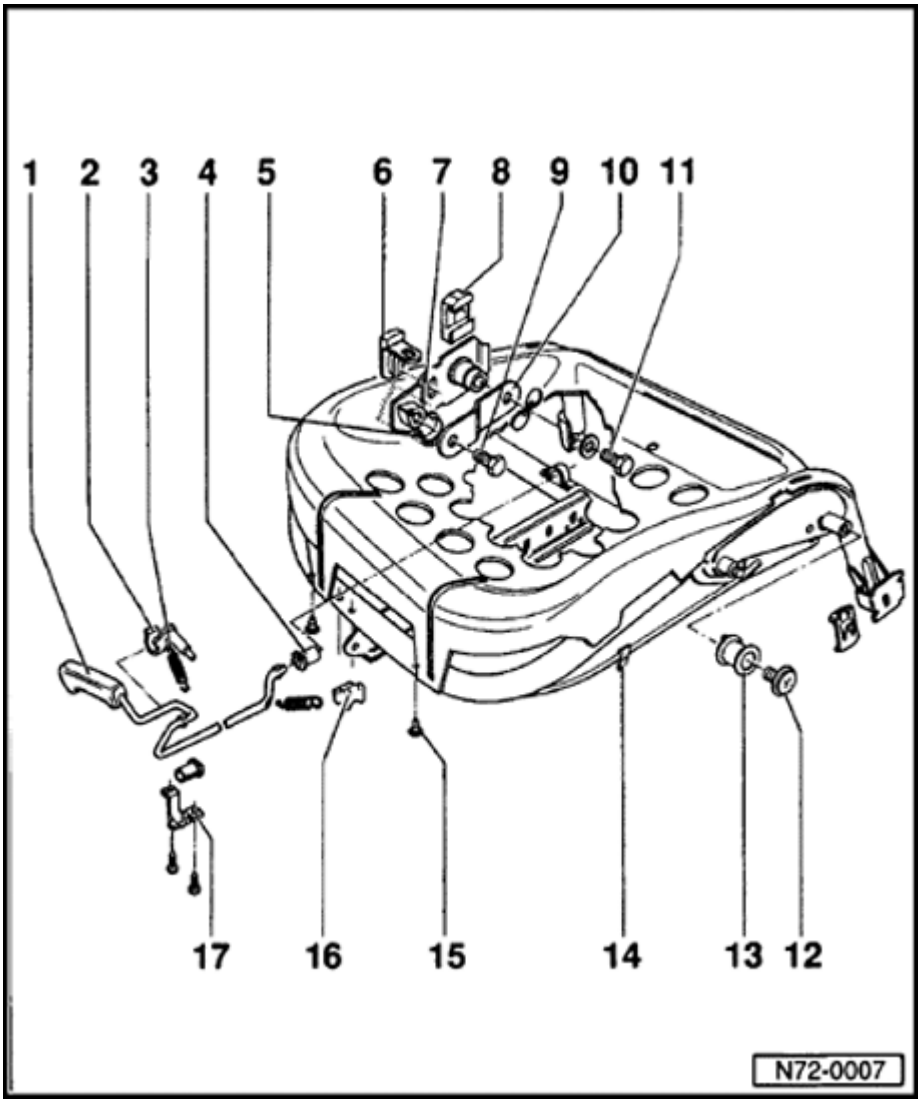

Seat frame (standard and sport seat)

1 - Operating lever

2 - Locking rod

- Lubricate with all-purpose grease.

3 - Spring

4 - Bushing

5 - Clip

6 - Thrust piece

- Press thrust piece into sliding plate and bend over tab.

7 - Sliding plate

72-6

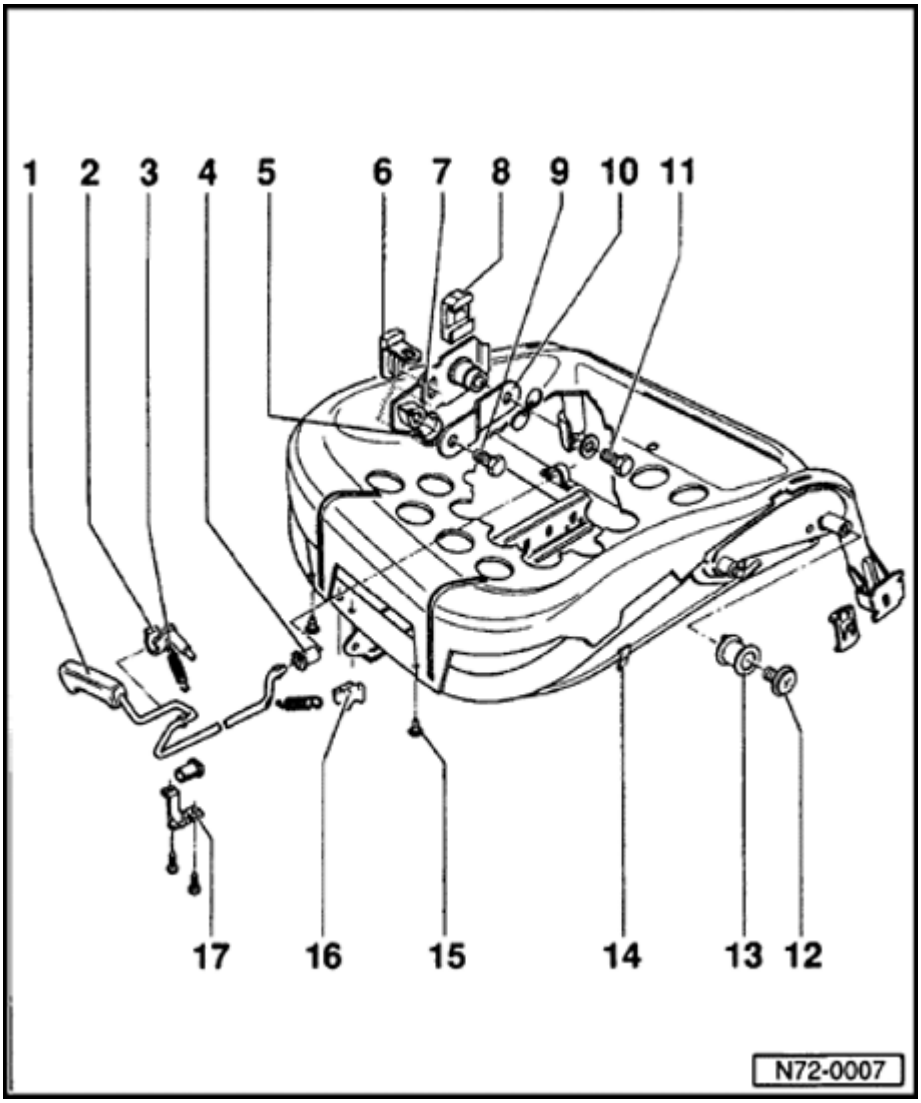

8 - Sliding piece

9 - Bolt

- 60 Nm (44 ft lb)

10 - Reinforcement plate

11 - Bolt

- 60 Nm (44 ft lb)
- On seats with height adjustment rivets are used instead of bolt.

12 - Screw

- 4 Nm (35 in. lb)
- Lock screw
- Always replace screw.
- Remove locking fluid residue in nut thread by using thread tap. Coat new screw with locking fluid D185 400 A2.

72-7

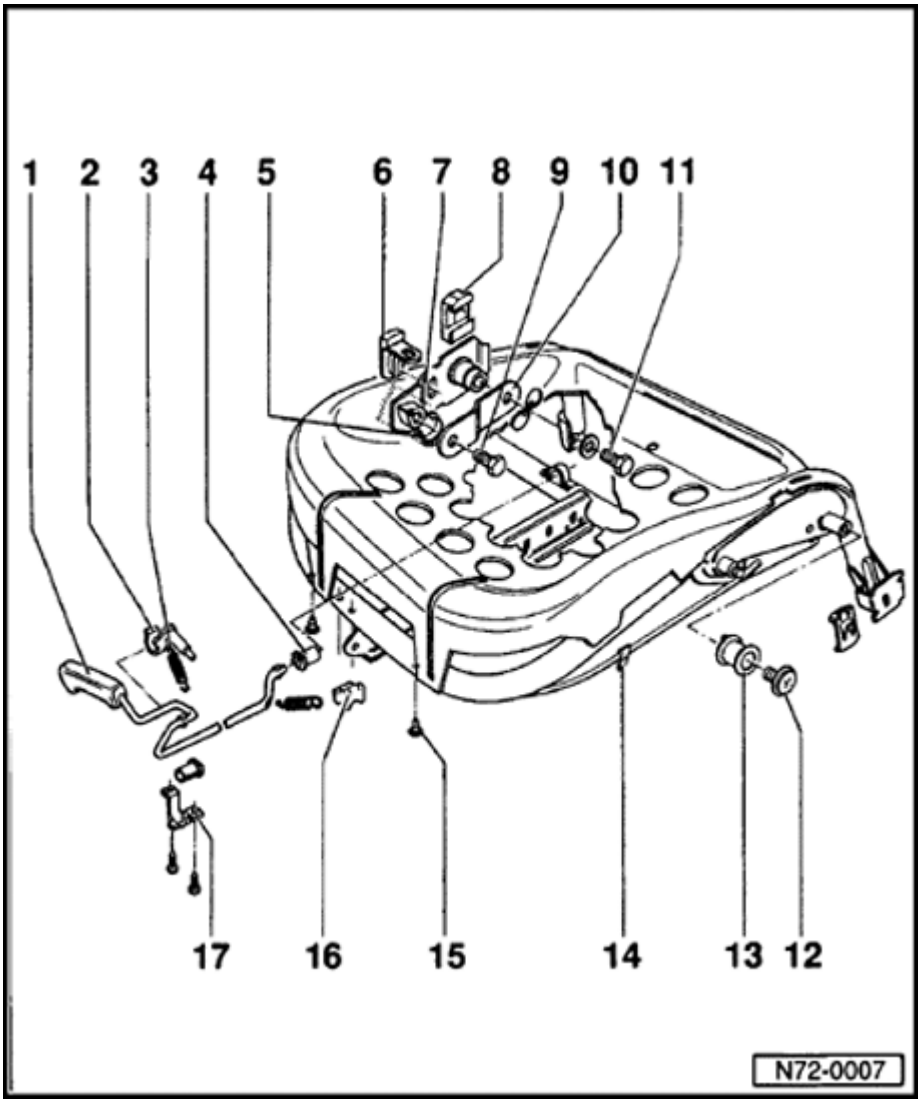

13 - Bushing

14 - Hook tabs for upholstery

15 - Clip for upholstery

16 - Sliding piece

- Lubricate contact surface of seat frame with multi-purpose grease.

17 - Bushing bracket

72-8

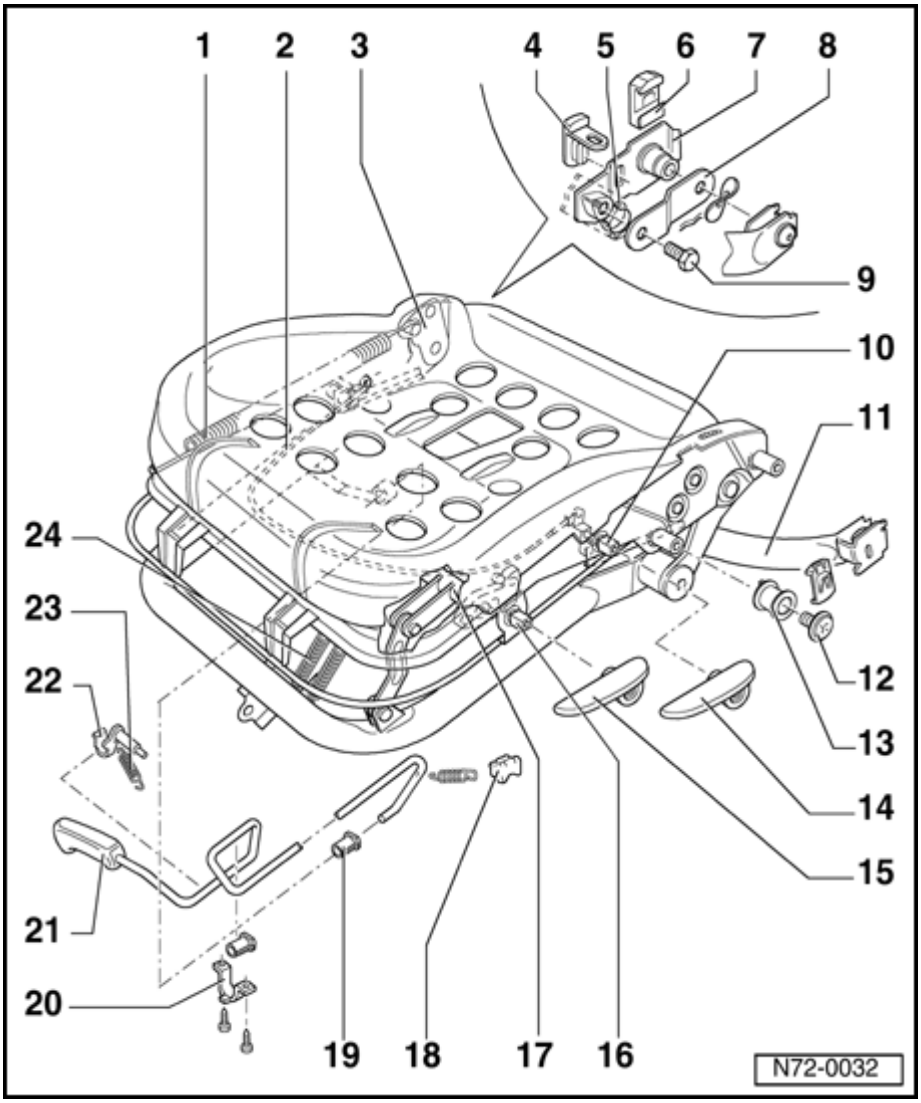

Seat frame with mechanical height adjustment

1 - Spring

- In seat pan frame.
- Retainer for height adjustment.
- Low seat height = high spring tension.

2 - Cable

- For seat height adjustment.
- Connected in front under seat pan.

3 - Mechanism for height adjustment

4 - Pressure piece

- Press into slide plate and bend over tab.

72-9

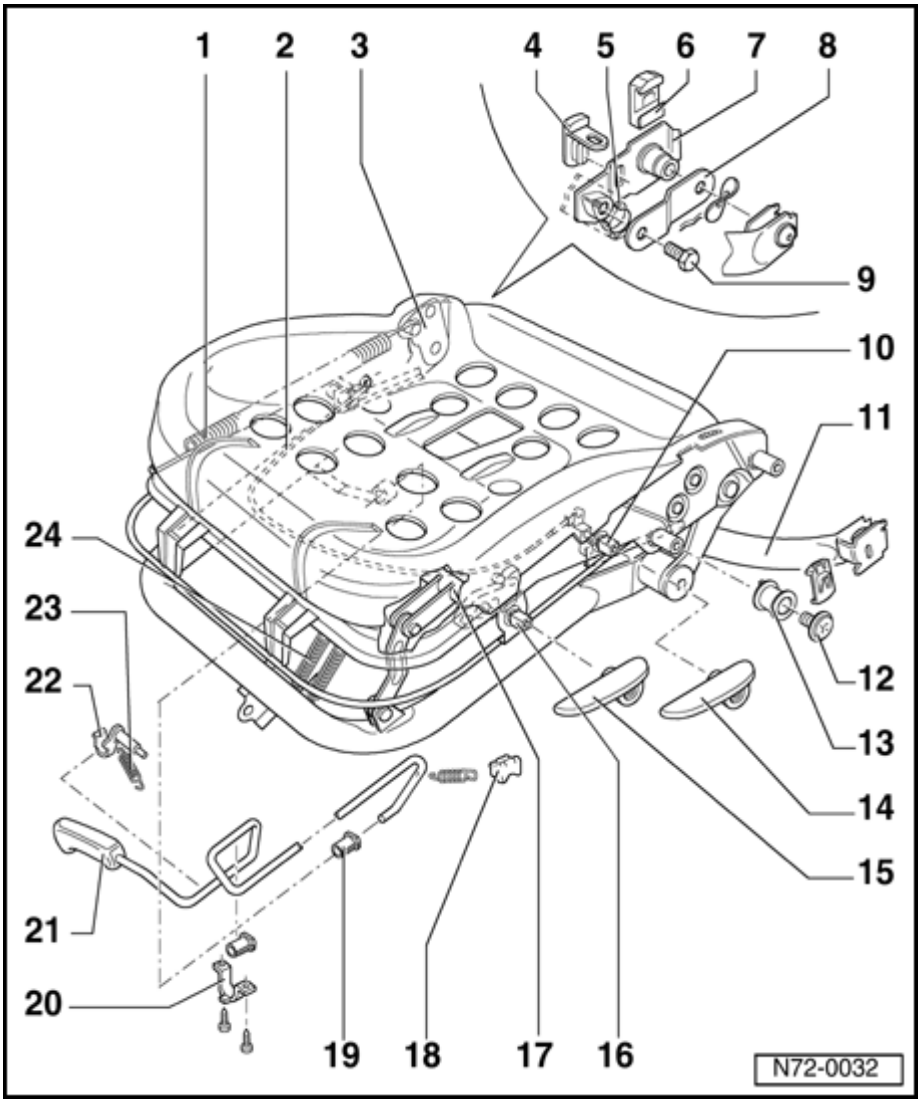

5 - Clip

6 - Sliding piece

7 - Sliding plate

- Riveted to reinforcement plate.

8 - Reenforcement plate

- Riveted to sliding plate.

9 - Bolt

- 60 Nm (44 ft lb)

10 - Adjustment shaft for height adjustment

11 - Sub-frame

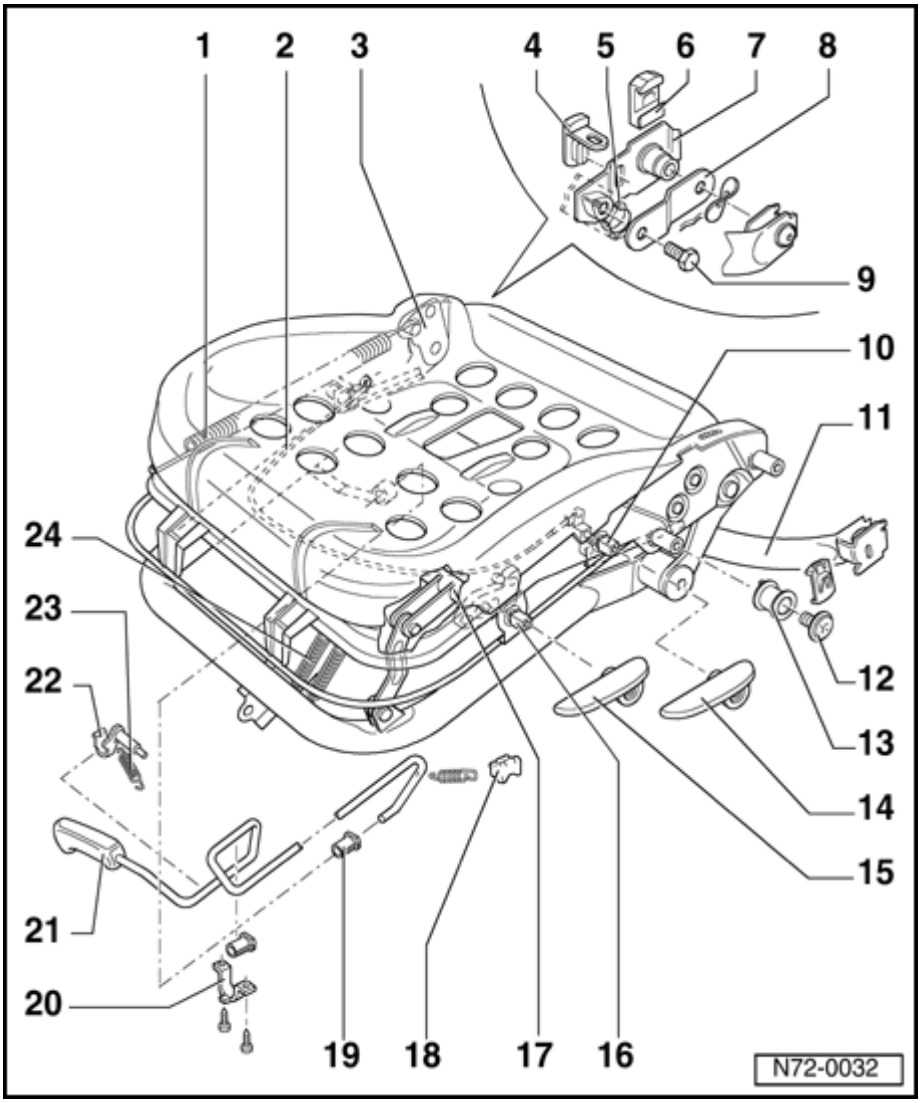

12 - Screw

- 4 Nm (35 in. lb)
- Lock screw.
- Always replace screw.
- Remove locking fluid residue in nut thread by using thread chaser. Coat new screw with locking fluid D185 400 A2.

13 - Bushing

14 - Adjusting handle

- For height adjustment.
- Install during assembly.

15 - Adjusting handle

- For tilt adjustment.
- Install during assembly.

16 - Operating shaft for tilt adjustment

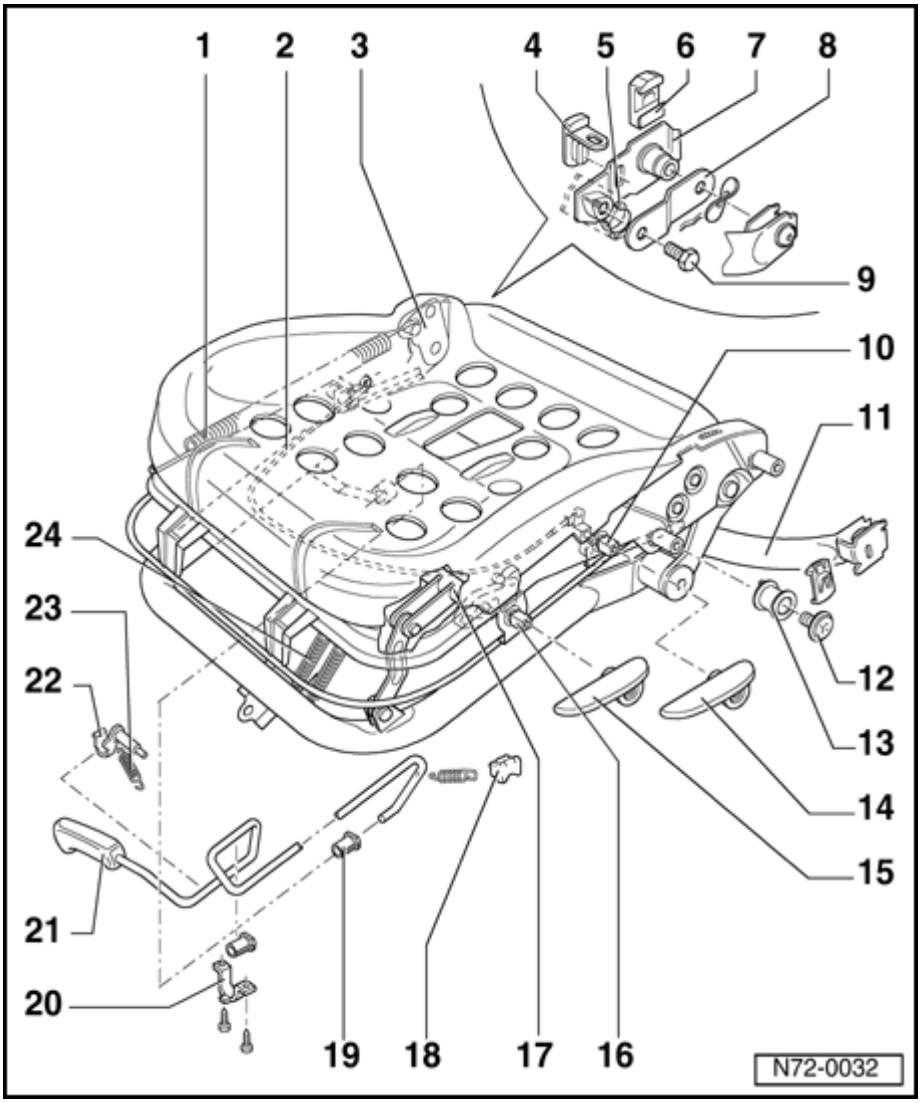

17 - Shaft for tilt adjustment

18 - Sliding piece

- Lubricate contact area of seat frame with multi-purpose grease.

19 - Bushing

20 - Bushing clamp

21 - Operating lever

22 - Engagement rod

- Lubricate with multi-purpose grease.

23 - Spring

24 - Spring

- Retainer for tilt adjustment.
- Attached between lower seat frame and shaft for tilt adjustment.

Seat frame with mechanical height adjustment, disassembling and assembling

- Adjust seat front to highest position.

- Remove front seat ⇒ Page 72-1 .

- Separate seat frame and frame for back rest. ⇒ Page 72-2 .

Note:

On heated seats, disconnect connectors for back rest heating from connector for seat heating and pull out cable from seat frame.

- Remove cover and padding for front seat with height adjustment ⇒ Page 74-5 .

Lower frame, removing

- Loosen clips for felt trim from seat pan.

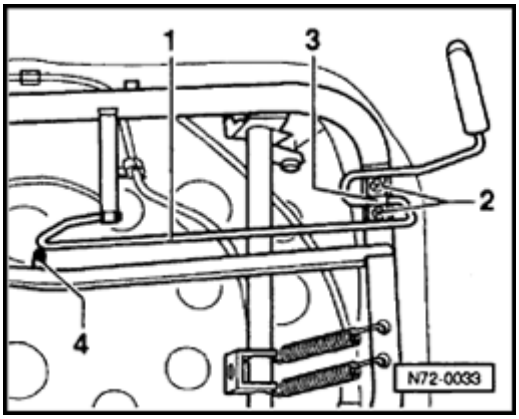

- Remove screws -2-, remove bushing clamp -3- and spring -4- and remove operating rod -1- for seat fore and aft adjustment from bushing toward rear.

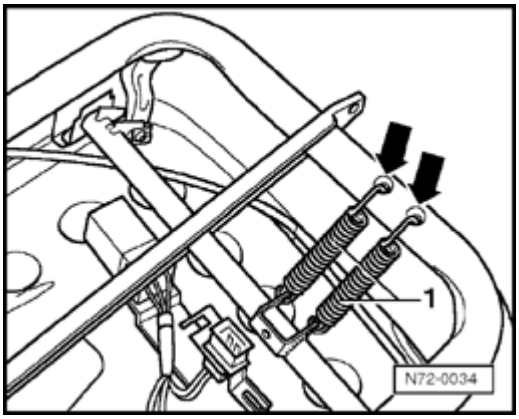

- Adjust seat tilt so that springs -1- have lowest tension.
- Disengage springs -1- at lower seat frame (arrows) and remove.

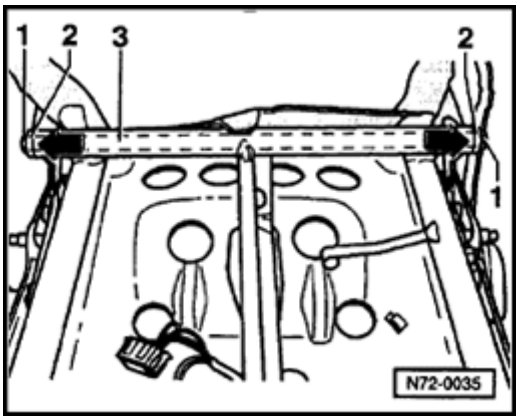

- Remove rear -1- (seat pan / lower frame).
- Press lever -2- outward (arrows) and pull off from inside axle -3- of lower frame.

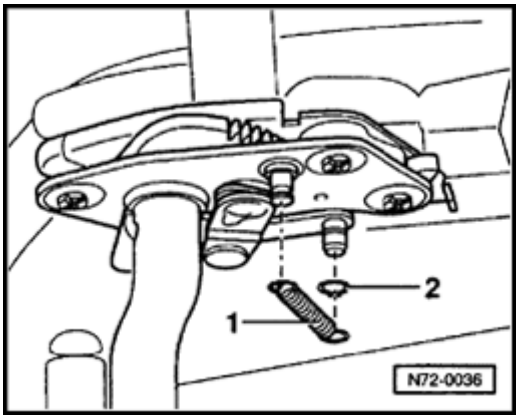

- Remove spring -1- and circlip -2- on tilt mechanism.

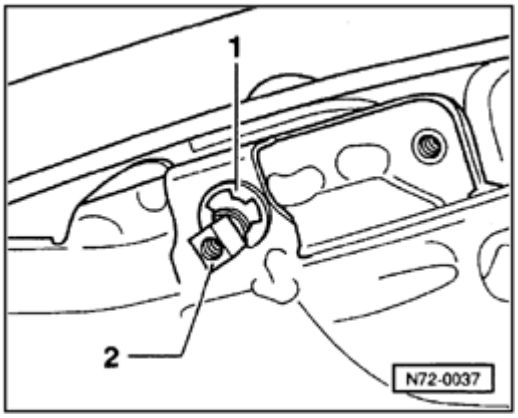

- Remove lock washer -1- on seat outer side and push tilt adjustment shaft -2- toward inside and remove.

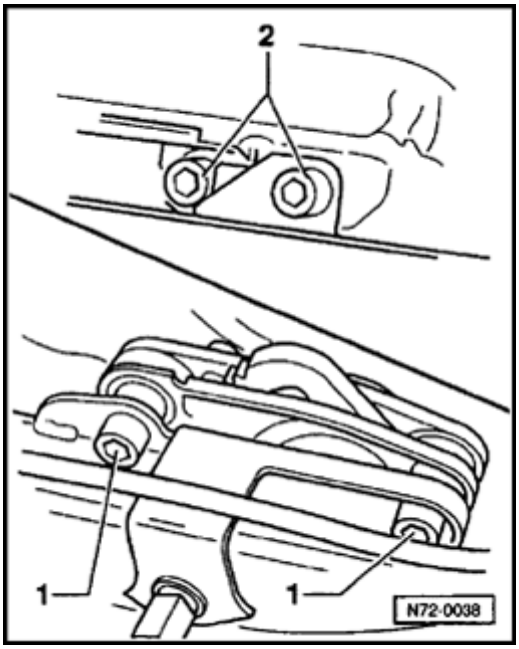

- Remove bolts -1-on left side and -2- on right side (reverse order for right seat).

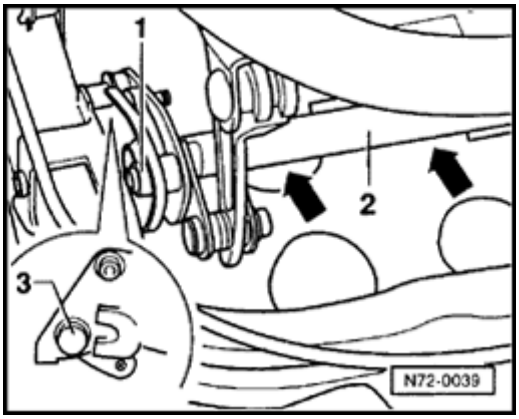

- Pry front mounting point -1- of tilt mechanism out (firm bushing with collar) and push shaft for tilt mechanism -2- parallel toward rear (arrows) until rear mounting point -3- is pushed out of guide.

Note:

If necessary, lightly tap with hammer to help parallel movement of the shaft for tilt mechanism.

- Remove lower seat frame together with tilt mechanism.

Cable for height adjustment, removing

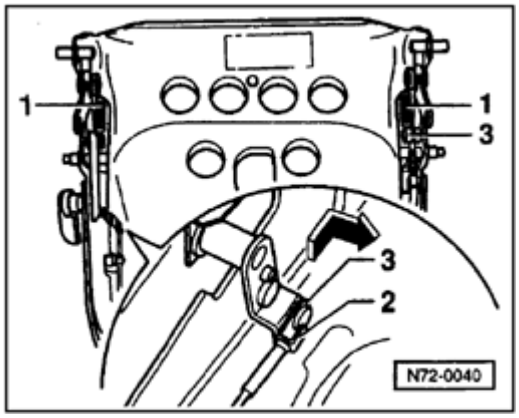

- Remove left and right springs -1- for height adjustment mechanism.
- Bend holding tabs -2- for cable eyes -3- and remove cable eyes.

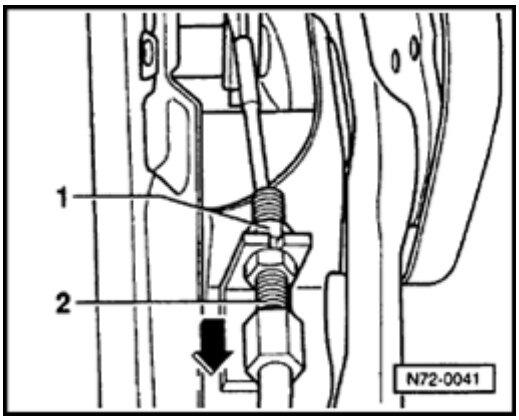

- Remove lock nut -1- for cable tensioning and remove threaded sleeve -2- in direction of arrow.
- Pull off cable clamps at front and under seat pan.

Cable, adjusting

- Install complete cable including springs on height adjustment mechanism.

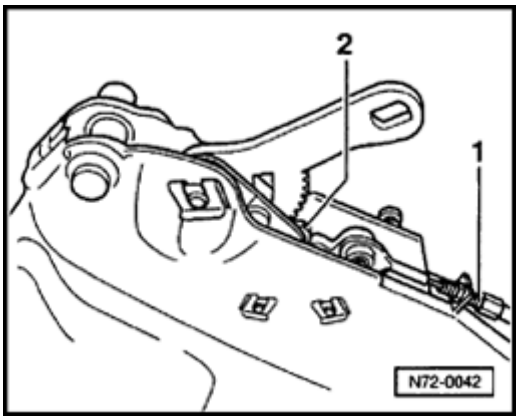

- Adjust threaded sleeve -1- in such a way that locks -2- of height adjustment mechanism can be operated on both sides at same time.

Height adjustment mechanism, removing

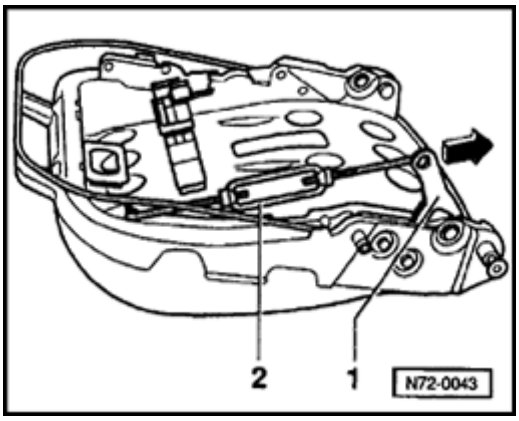

- Block lever -1- with suitable turnbuckle -2- (i.e. 3004) and keep under slight tension.

Note:

The turnbuckle takes up the spring tension (arrow) of the height adjustment mechanism during removal. The threaded bolts of the turnbuckle must have enough length for opening.

72-18

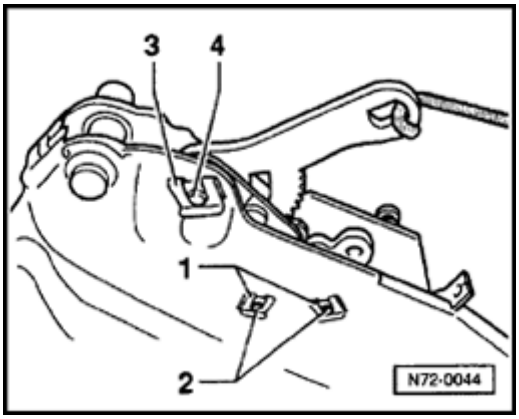

- Remove clips -1- and press out bearing pins -2-.
- Open turnbuckle to release tension.
- Remove clip -3- and press out bearing pin -4-.

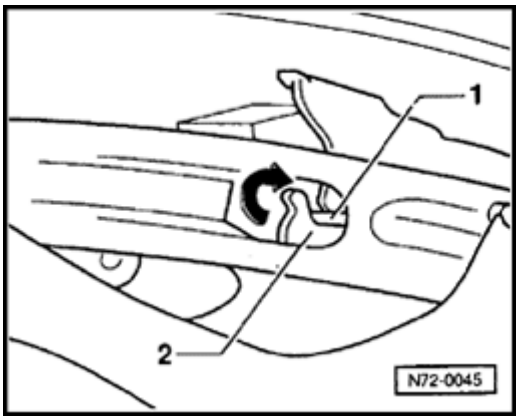

- Remove spring -1- from front bracket -2- in frame for seat pan and pull out lever including height adjustment mechanism and spring toward rear.

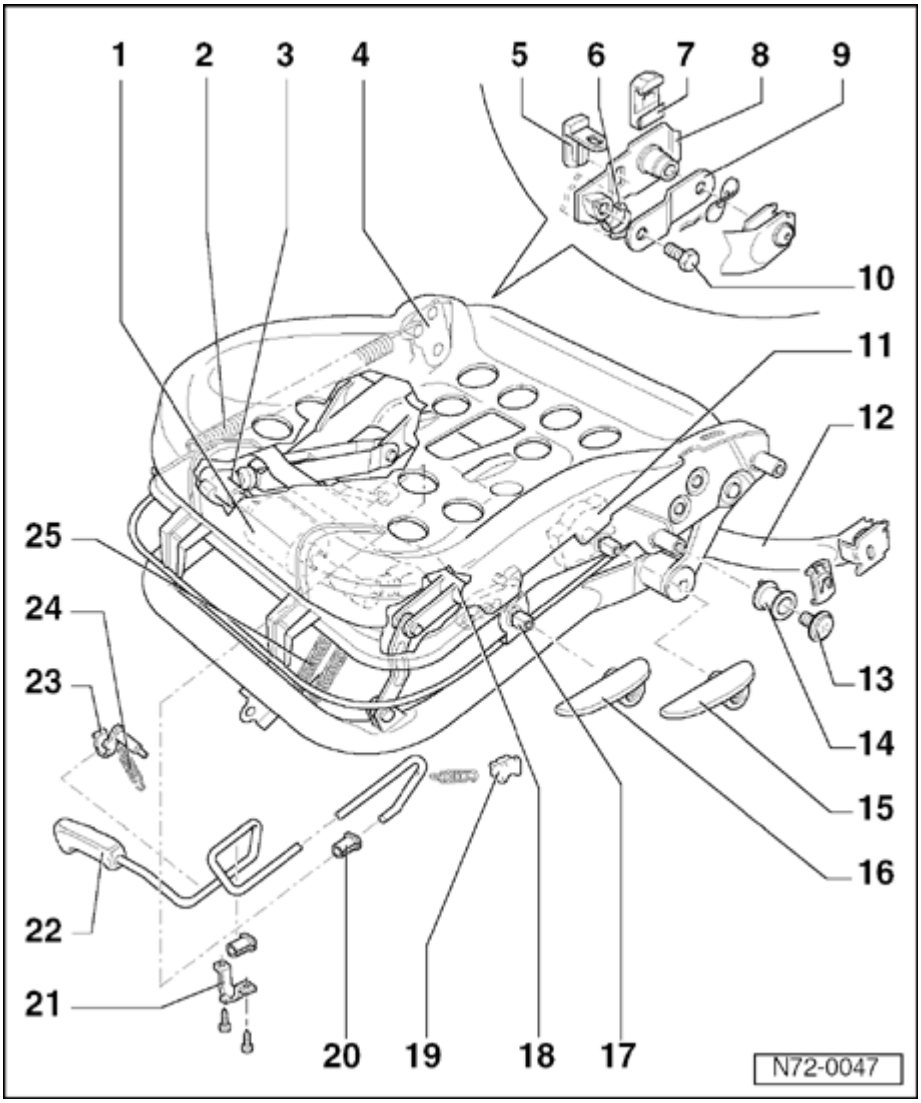

Seat frame with electrical height adjustment

1 - Motor for Height Adjustment -V30- or -V33-

2 - Spring

- In frame for seat pan.
- Retainer for height adjustment.
- Low seat height = high spring tension.

3 - Adjustment spindle

- For seat height adjustment.

4 - Height adjustment mechanism

5 - Pressure piece

- Press pressure piece into sliding plate and bend over tab.

72-20

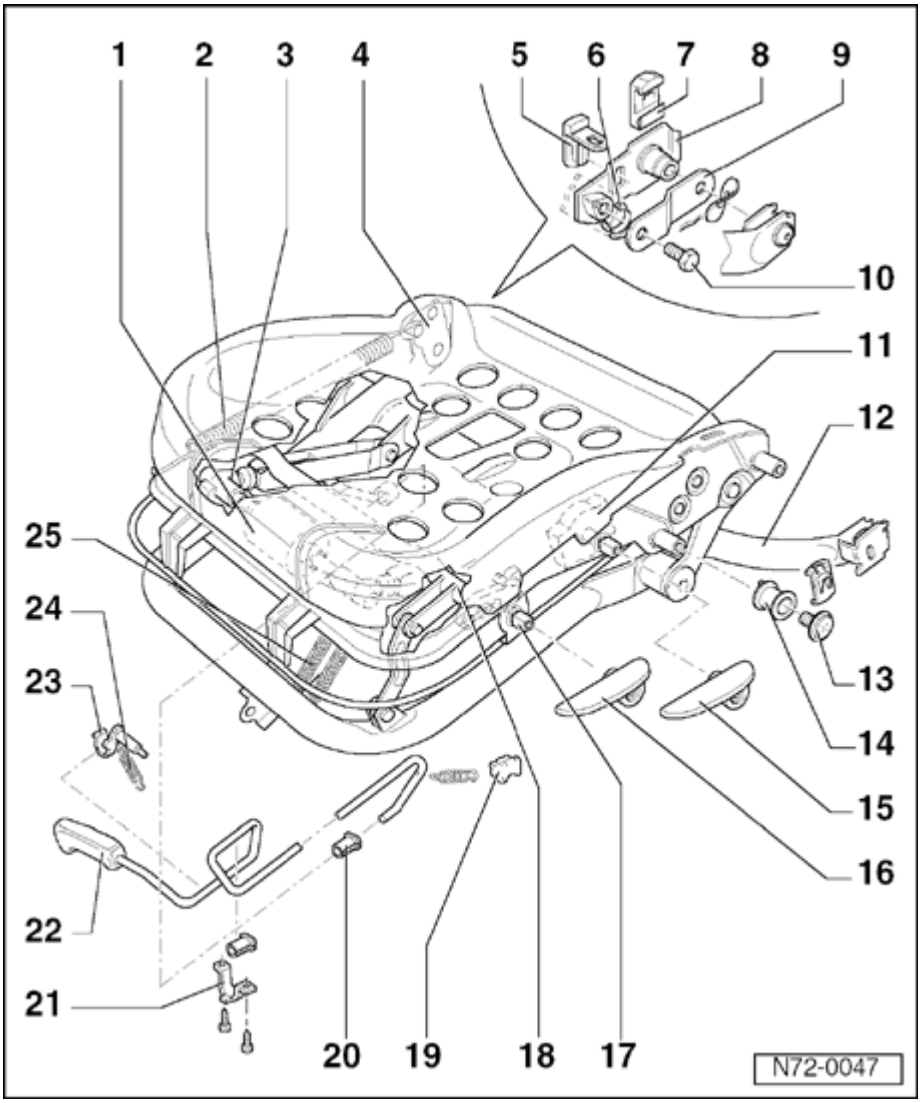

6 - Clip

7 - Sliding piece

8 - Sliding plate

- Riveted to reinforcement plate.

9 - Reinforcement plate

- Riveted to sliding plate.

10 - Bolt

- 60 Nm (44 ft lb)

11 - Height Adjustment Switch -E63- or -E66-

12 - Lower frame

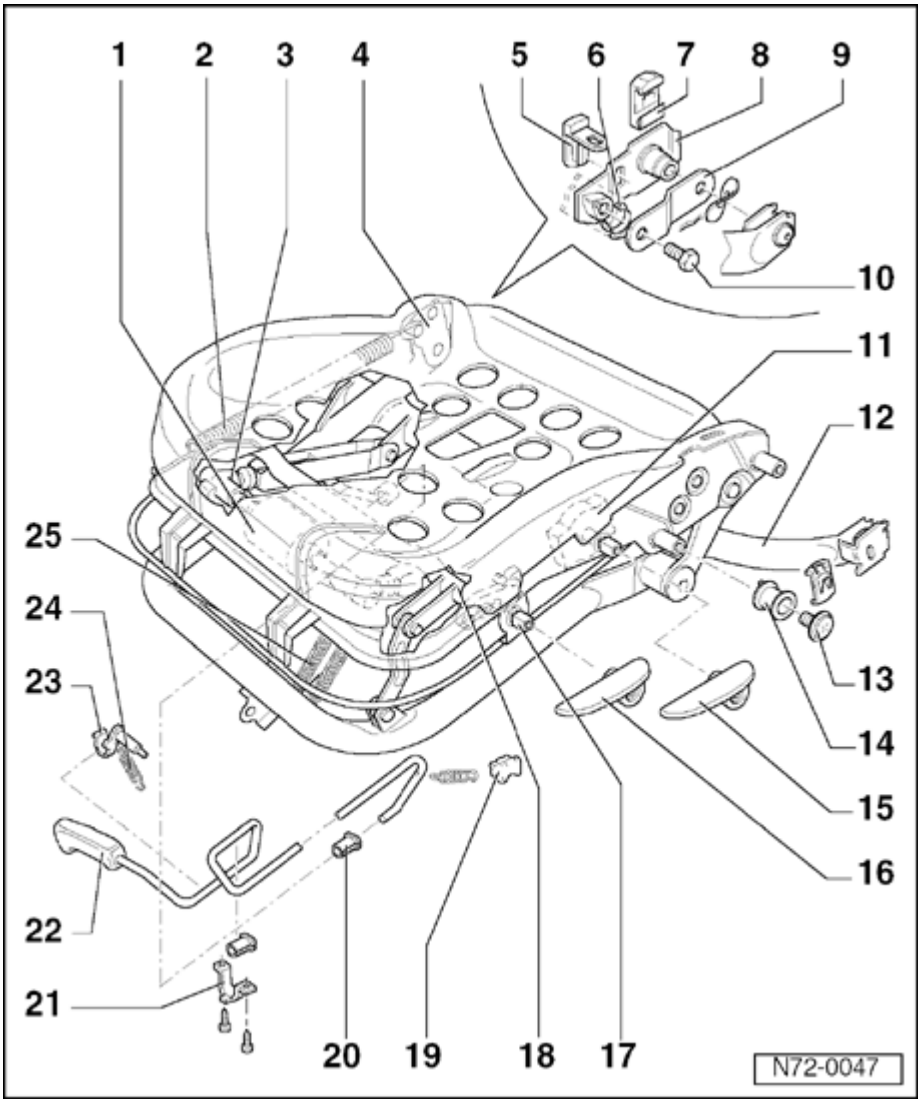

13 - Screw

- 4Nm (35 in. lb)
- Lock screw.
- Replace screw. Remove locking fluid residue in nut thread by using thread tap. Coat new screw with locking fluid D185 400 A2.

14 - Bushing

15 - Adjustment handle

- For height adjustment.

16 - Adjustment handle

- For tilt adjustment.
- Press on when installing.

17 - Operating shaft for tilt adjustment

18 - Tilt mechanism shaft

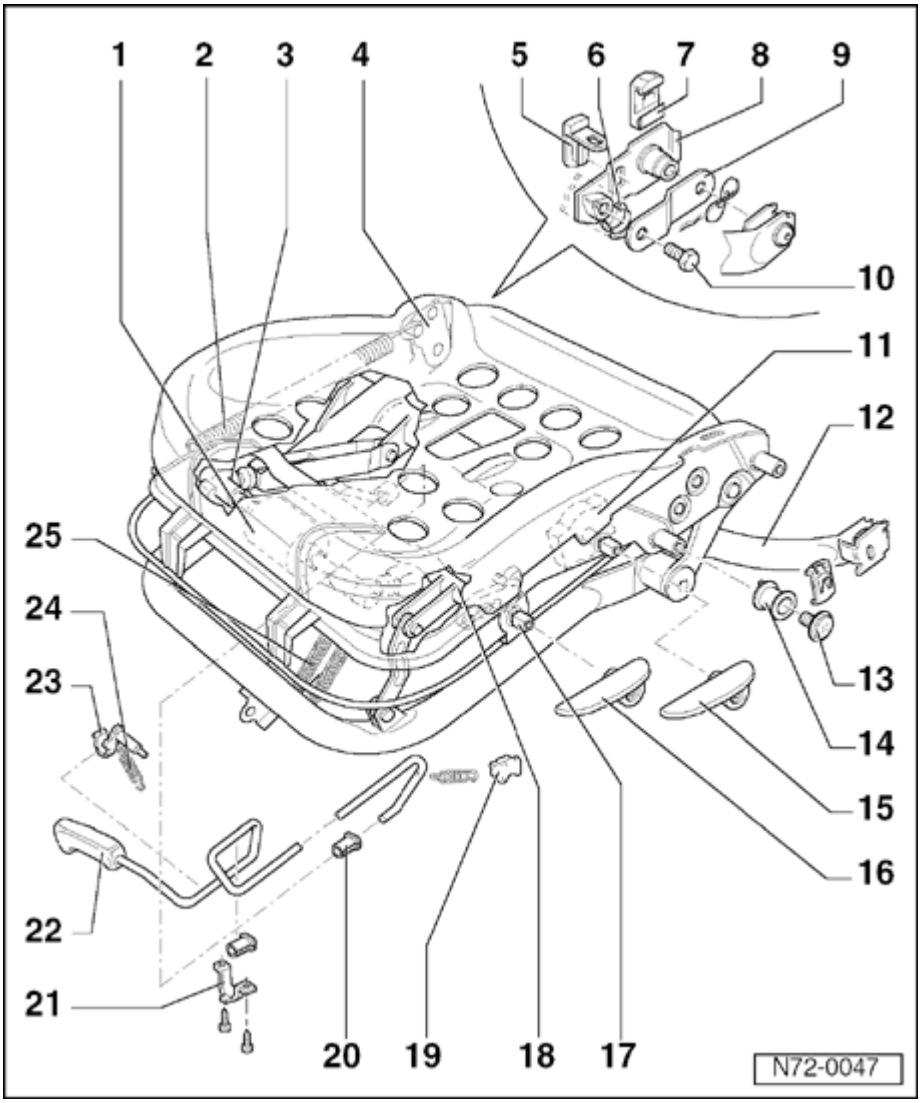

19 - Sliding piece

- Lubricate contact surface of seat frame with multi-purpose grease.

20 - Bushing

21 - Bushing clamp

22 - Operating lever

23 - Engagement rod

- Lubricate with multi-purpose grease.

24 - Spring

25 - Spring

- Retainer for tilt mechanism.
- Attached between lower frame and tilt mechanism shaft.

Seat frame with electrical height adjustment, disassembling and assembling

- Place front seat in highest position

- Remove front seat ⇒ Page 72-1 .

- Separate seat frame and backrest ⇒ Page 72-2 .

Note:

On heated seats, disconnect connectors for backrest heating from connector for seat heating and pull out cable from seat frame.

- Remove cover and padding for front seat with height adjustment ⇒ Page 74-5 .

Lower frame, removing

- Loosen clips for felt trim from seat pan.

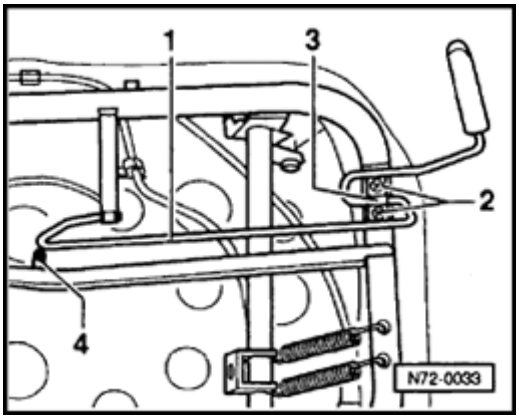

- Remove screws -2-, remove bushing clamp -3- and spring -4- and remove operating rod -1- for seat fore and aft adjustment from bushing toward rear.

72-24

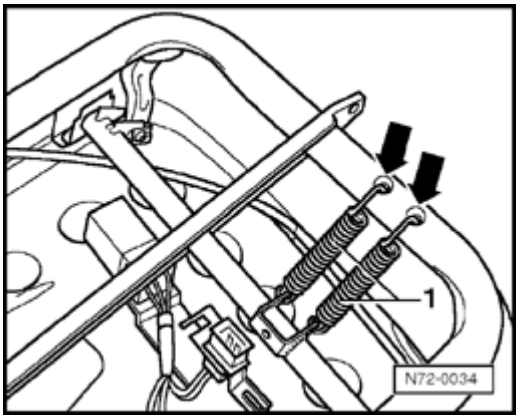

- Adjust seat tilt until springs -1- have lowest possible tension.
- Unhook springs -1- from lower seat frame (arrows) and remove.

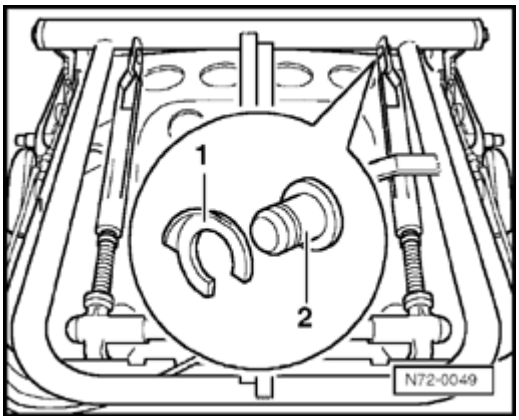

- Disengage adjustment shaft from lower frame by removing circlips -1- and pins -2-.

Notes:

- *Seat must be in uppermost position.*
- *When installing be sure adjustment shaft is in same position.*

72-25

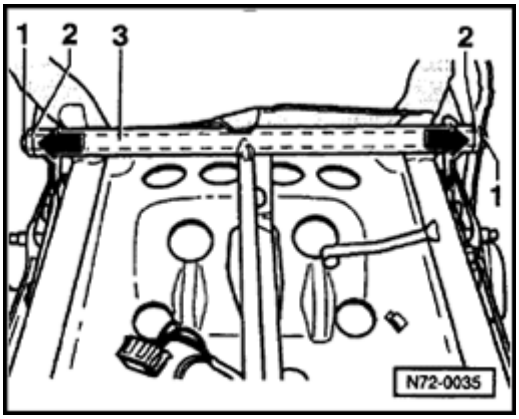

- Remove rear bolts -1- (seat pan / lower frame).
- Press lever -2- outward (arrows) and pull off from inside axle -3- of lower frame.

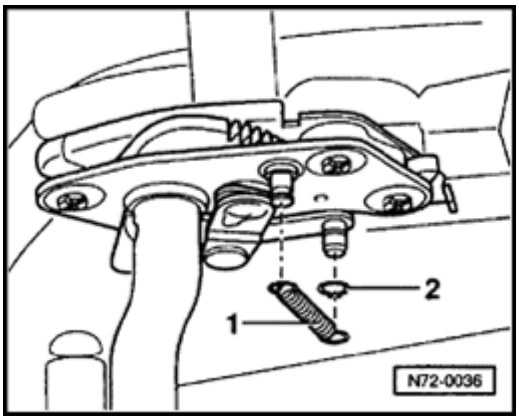

- Remove spring -1- and circlip -2- from tilt mechanism.

72-26

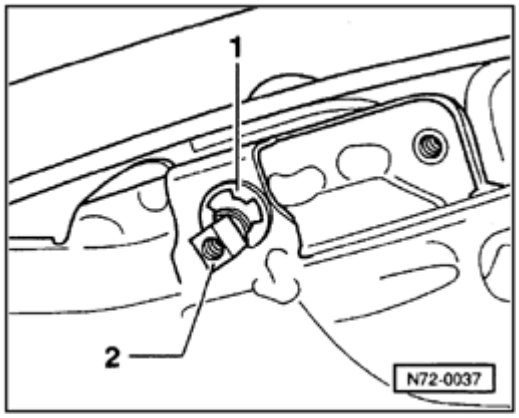

- Remove washer -1- on outer side of seat and push operating shaft for tilt mechanism -2- toward inside and remove.

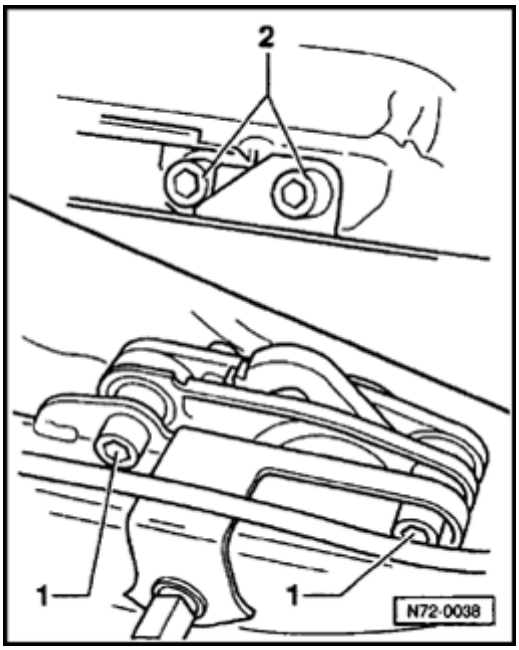

- Remove bolts for tilt mechanism on left side -1- and right side -2-.

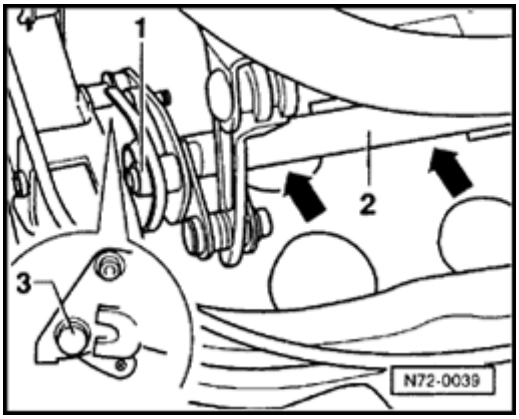

- Pry front mounting point -1- of tilt mechanism out (firm bushing with collar) and push shaft for tilt mechanism -2- parallel toward rear (arrows) until rear mounting point -3- is pushed out of guide.

Note:

If necessary lightly tap with hammer to help parallel movement of the shaft for tilt mechanism.

- Remove lower frame with tilt mechanism.

Height adjustment mechanism, removing

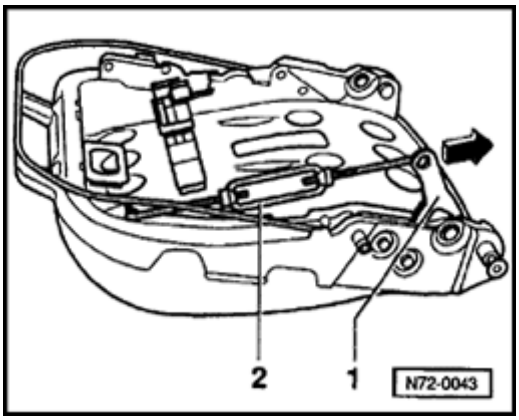

- Block lever -1- with suitable turnbuckle -2- (i.e. 3004) and keep under slight tension.

Note:

The turnbuckle takes up spring tension (arrow) of the height adjustment mechanism during removal. The threaded bolts of the turnbuckle must have enough length for opening.

72-28

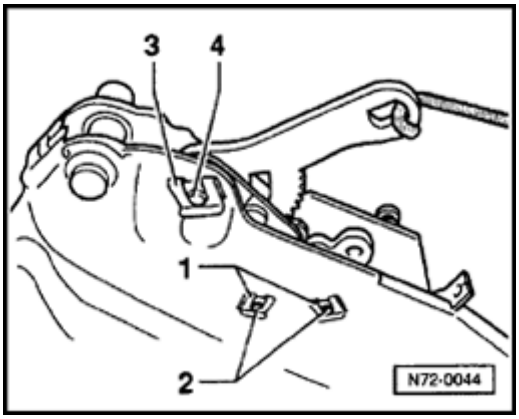

- Remove clips -1- and press out bearing pins -2-.
- Open turnbuckle until spring tension is released.
- Remove clip -3- and press out bearing pin -4-.

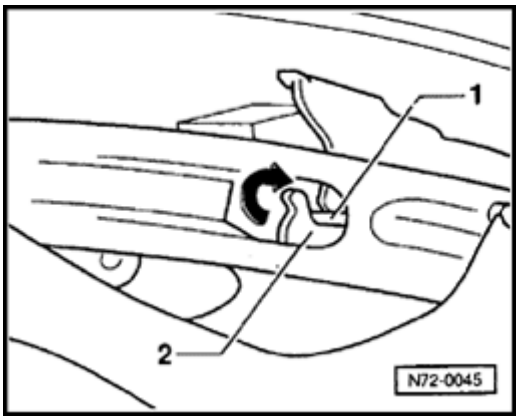

- Disengage spring -1- at front bracket -2- in seat pan frame and pull out lever (including height adjustment mechanism) together with spring toward rear.

Motor for Height Adjustment -V30- or -V33- and adjustment shaft, removing and installing

Note:

To remove the motor for height adjustment it is not necessary to remove the adjustment shafts.

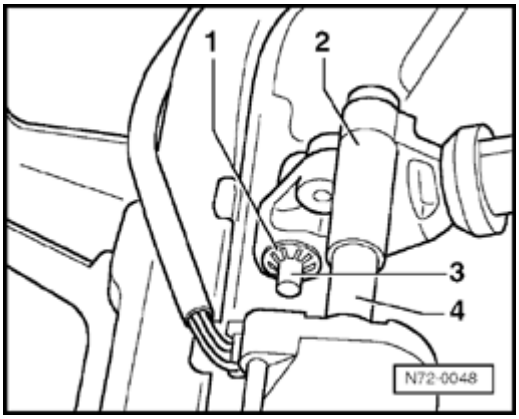

- Remove spring washer -1- and pull out shaft -3- from mountings on seat pan frame.
- Pull out adjustment shaft with gear box -2- from mounting and pull off of flexible shaft -4-.
- Remove connector for height adjustment motor -V30- or -V33-.

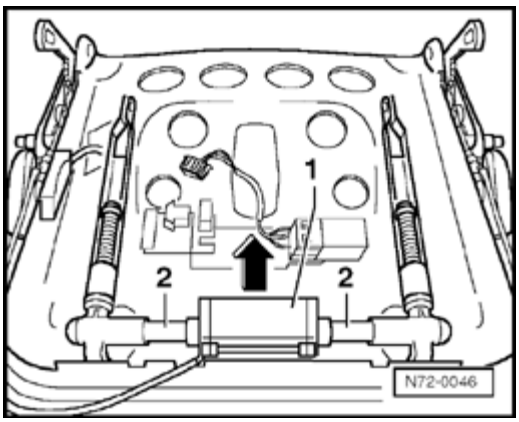

- Remove bolts for motor (from seat) and lift out motor -1- between flexible shafts -2- (arrow).

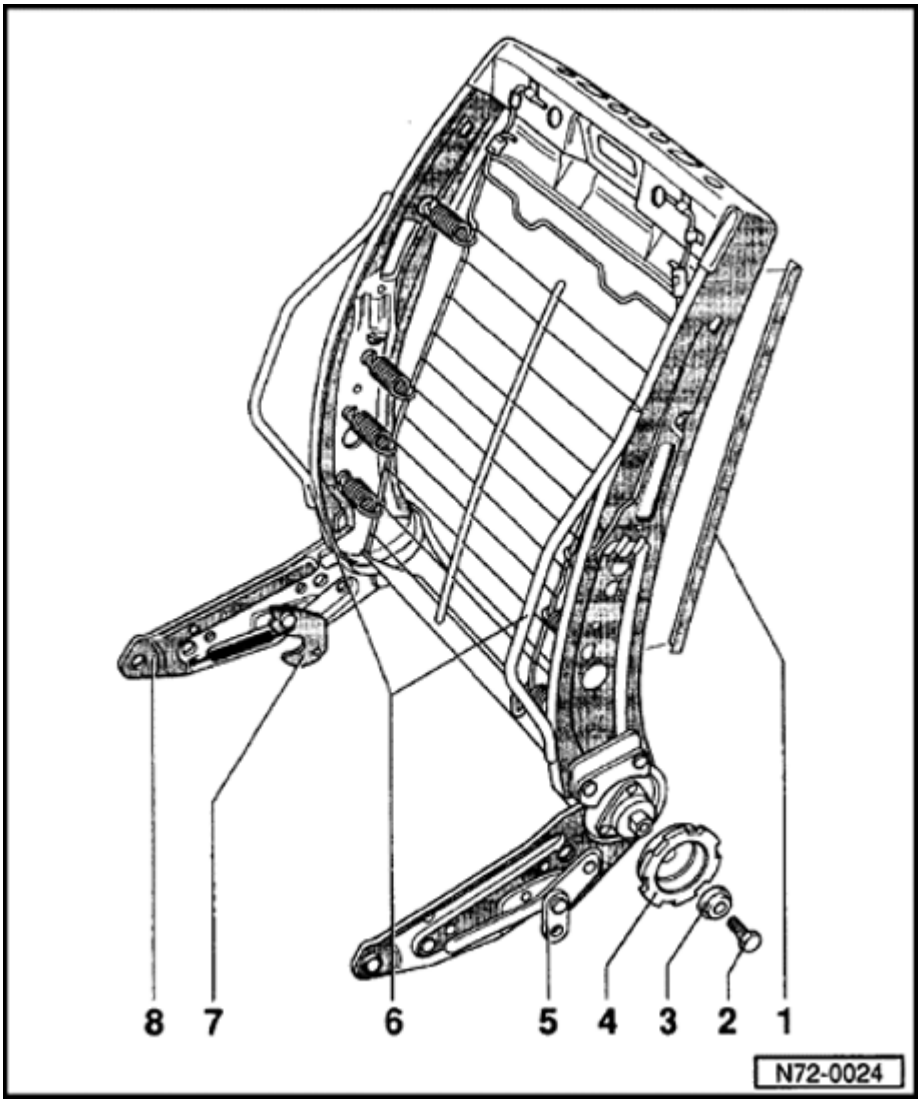

Backrest frame

1 - Protective strip

- Glue on with adhesive D 001 200.

2 - Bolt

- 5 Nm (44 in. lb)

3 - Washer

4 - Adjustment knob

5 - Connecting tab

6 - Support (sport seat only)

7 - Locking hook

- Optional equipment only , otherwise like item - 5 -.

8 - Backrest frame

- Replacing ⇒ Page 72-31

Backrest frame, replacing

Only sport seat backrests are supplied as replacement parts. If a standard backrest frame must be replaced, do the following:

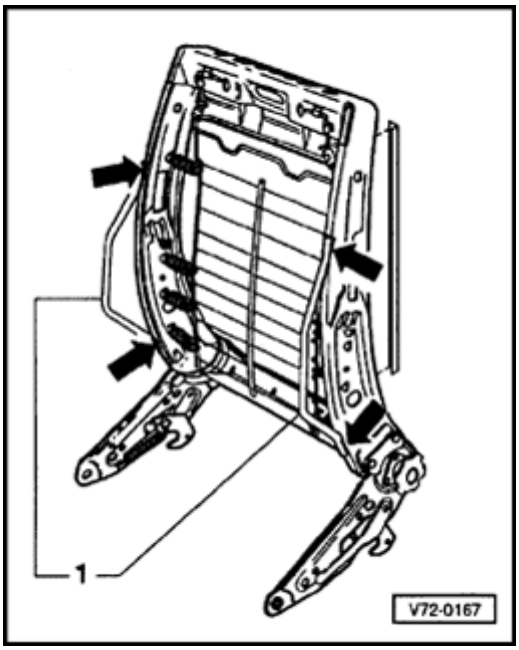

- Cut off support -1-. Angle grinder VAG1422/A is suitable for this work.
- Remove burrs at cutting points (arrows) and protect against corrosion with primer ALN 002 003 04.

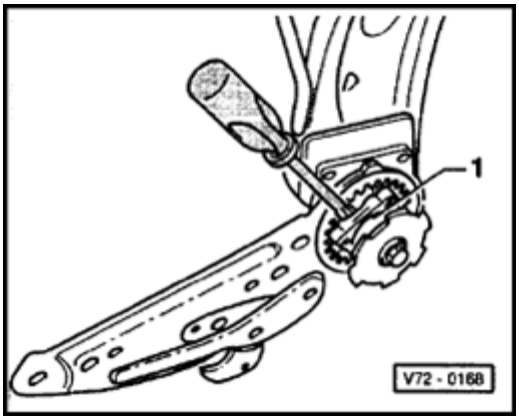

As replacement parts, backrests for both sides are are equipped with a backrest adjustment -1-.

- Remove unneeded backrest adjustment with a screwdriver.

Rear seats

Rear seat and split backrest, removing

- Lift up seat bench with pull strap.

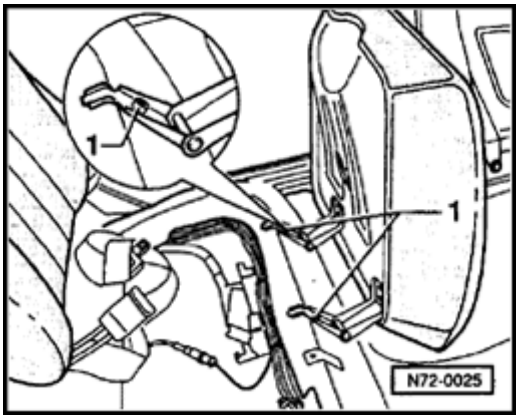

- Remove socket head bolt -1- and remove seat bench part including hinges.
- Fold down both backrest sections.

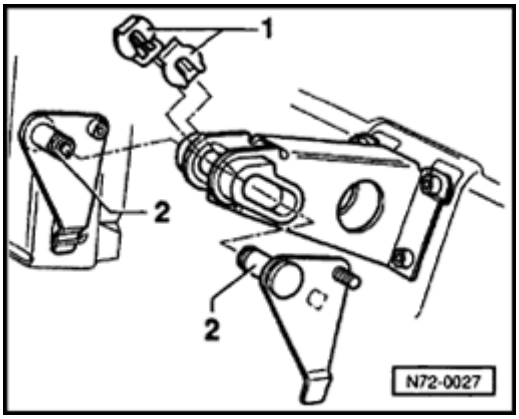

- Remove clips -1- from pins of adapter -2- at center mounting of backrest sections.

72-33

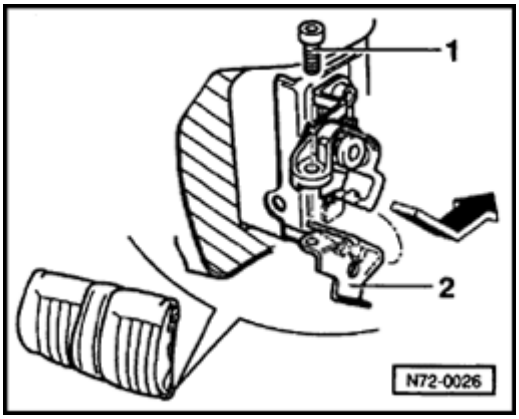

- Remove socket-head bolt -1- at applicable outer mount of backrest section.
- Press down backrest section with mounting at a slant and disengage from support bracket -2-.
- Pull out backrest section from center mounting and remove from vehicle.

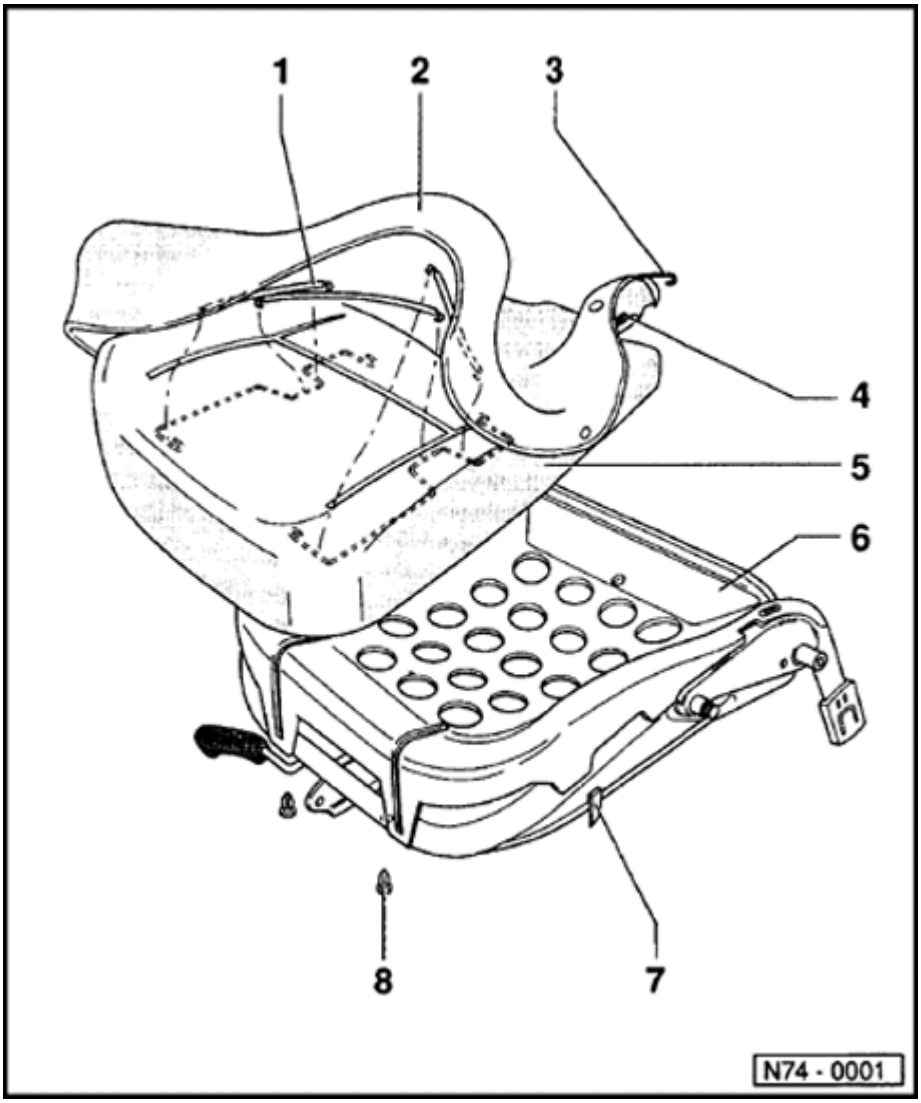

Seat upholstery

Cover and padding for front seat, removing and installing

1 - Upholstery wire

- Connected in padding, disconnect and connect with awl VAG1636.

2 - Cover

Removing:

- Separate seat and backrest ⇒ Page 72-2
- Remove cover and padding ⇒ Page 74-3

3 - Cover tensioning wire

- Secure cover with clips and attach to hook tabs, then pull tensioning wire tight and secure.

74-2

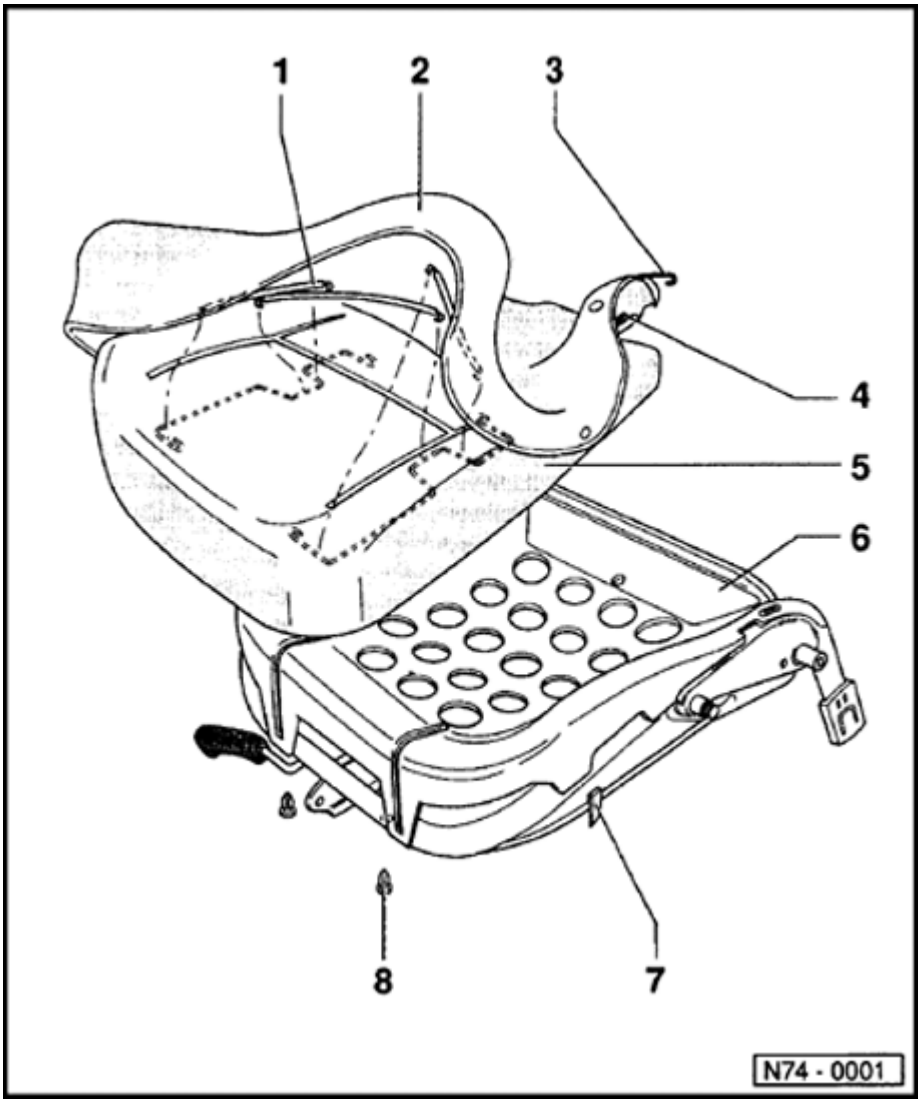

4 - Clip strips

5 - Padding

Removing:

- Separate seat and backrest ⇒ Page 72-2
- Remove cover and padding ⇒ Page 74-3

6 - Seat frame

7 - Cover hook tabs

8 - Clip

74-3

Cover and padding, removing

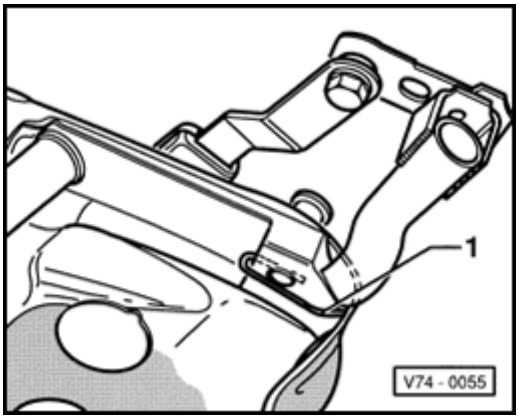

- Unhook left and right tensioning wire -1-.

Note:

When clipping in, re-tension wire -1- slightly.

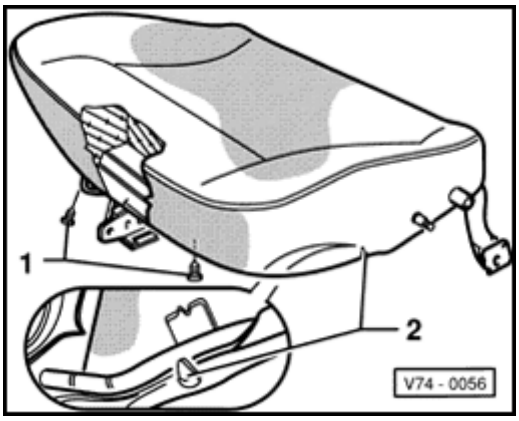

- Pry out clips -1- and open left and right tabs -2-.

74-4

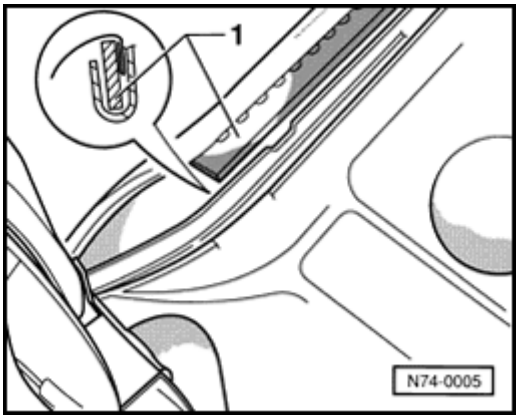

- Unhook clip strips -1- from seat pan.

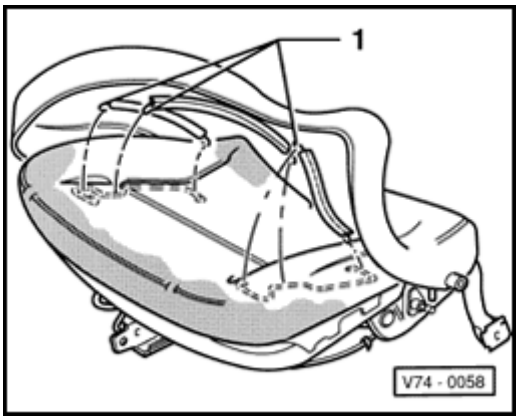

- Roll up seat cover until upholstery wires -1- are visible.
- Unhook upholstery wire -1- with awl VAG1636 and remove cover.
- Remove padding from seat frame.

Note:

To make it easier to install, warm cover to about 30 ° C (86° F).

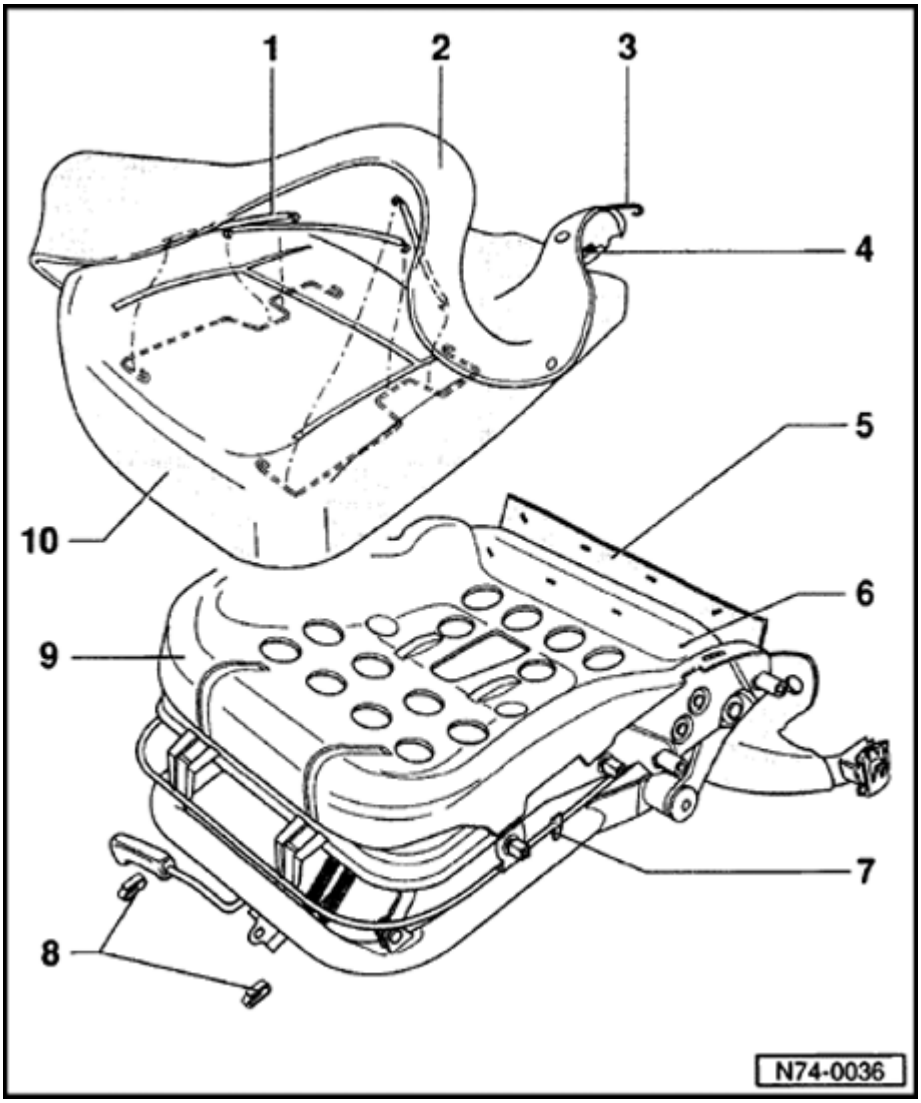

Cushion cover and padding for front seat with height adjustment, removing and installing

1 - Upholstery wire

- Connected in padding, disconnect and connect with awl VAG1636.

2 - Cover

Removing:

- Separate seat and backrest ⇒ Page 72-2
- Remove cover and padding ⇒ Page 74-3

3 - Cover tensioning wire

- Secure cover with clips and attach to hook tabs, then pull tensioning wire tight and secure.

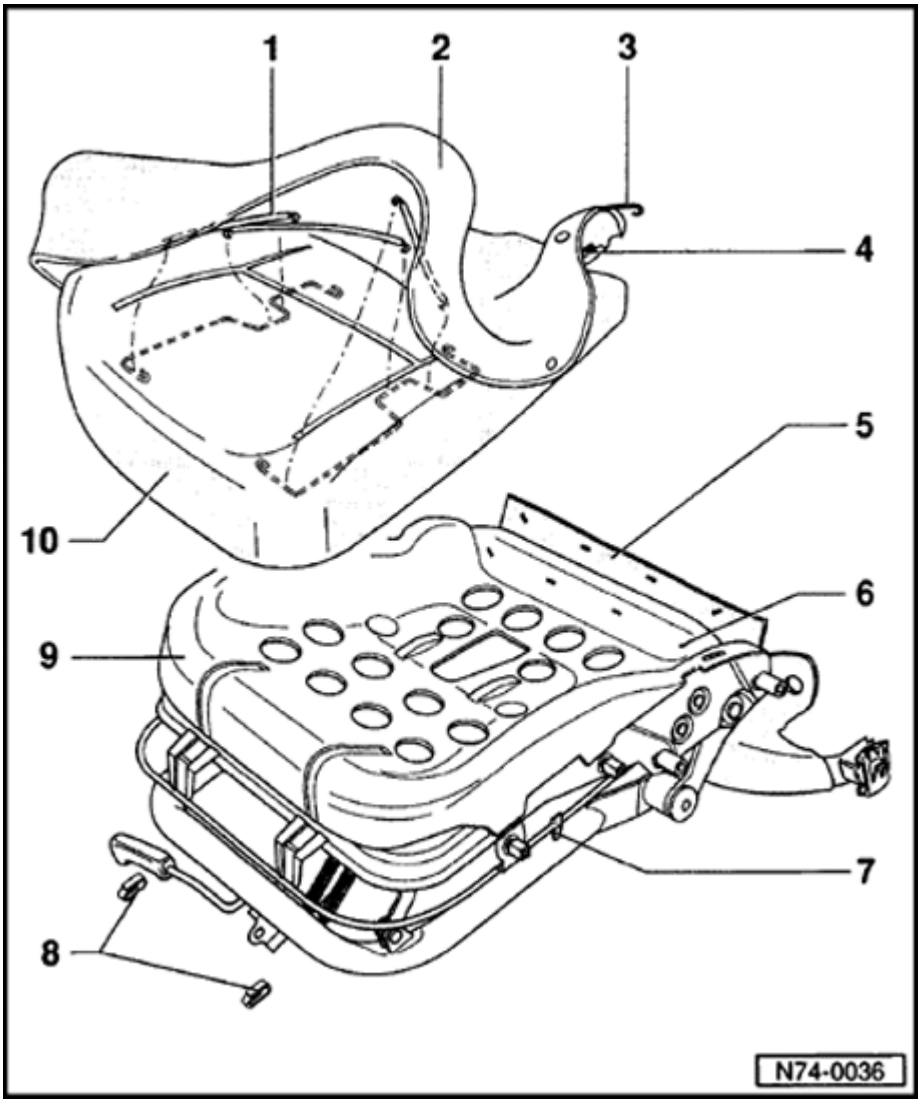

4 - Clamping strip

5 - Felt trim

- Attached to lower frame with hook tabs.
- Clamped to seat pan.

6 - Felt trim mounting point

7 - Hook tab

8 - Clip

- Connected in tensioning wire -3- under seat pan.

9 - Seat frame

10 - Padding

Removing:

- Separate seat and backrest ⇒ Page 72-2
- Remove cover and padding ⇒ Page 74-3

Cover and padding, removing

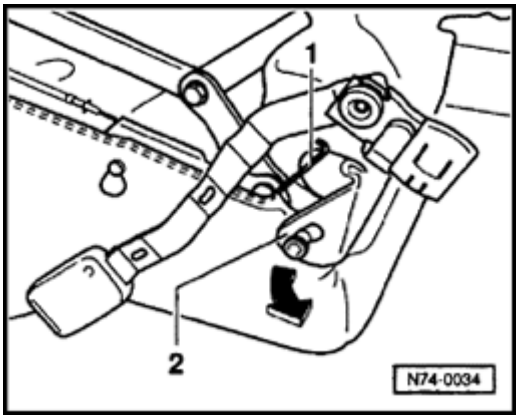

- Loosen felt trim -2- in area of backrest mounting.
- Disconnect left and right tensioning wire -1-.

Note:

When attaching wire -1-, re-tension it slightly.

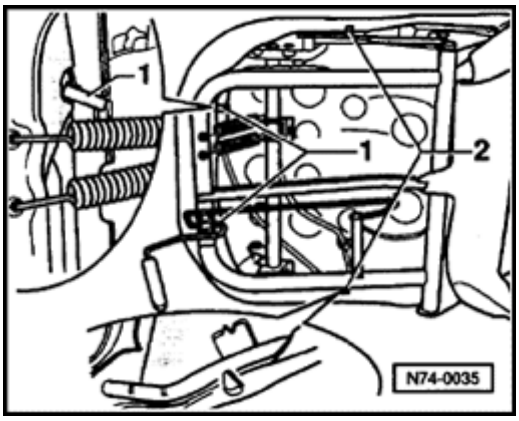

- Remove clips -1- and open left and right hooks -2-.

74-8

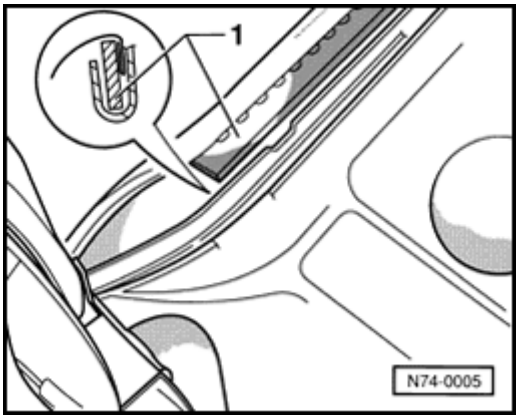

- Remove retention strip -1- from seat pan.

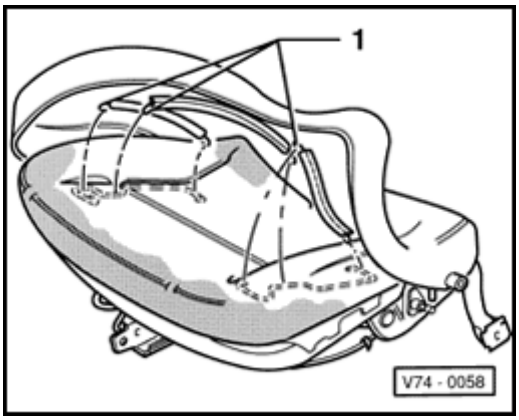

- Roll up cover until cover wires -1- are visible.
- Unhook cover wires -1- with awl VAG1636 and remove cover.
- Remove padding from seat frame, if necessary disconnect connector for seat heater.

Note:

To make it easier to install, warm cover to about 30 ° C (86° F).

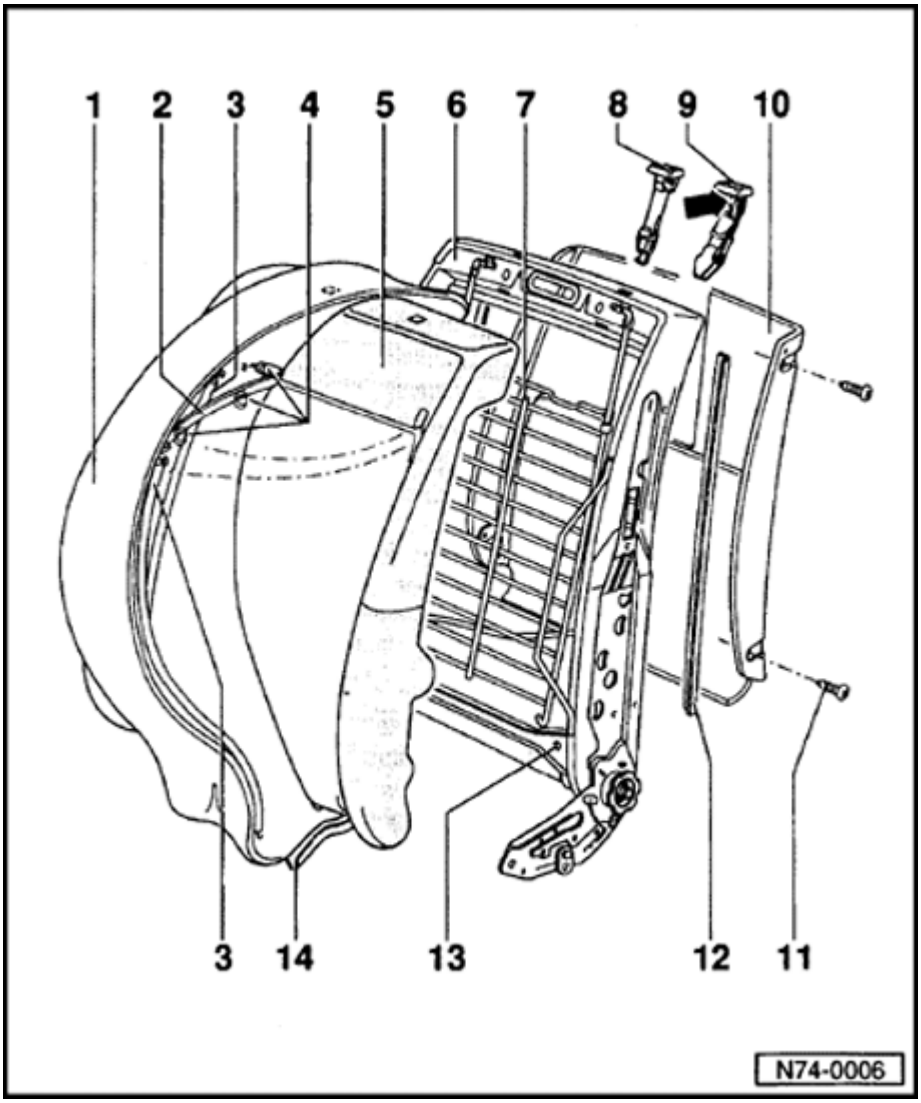

Backrest cover and padding, removing and installing

1 - Cover

Removing:

- Separate seat and backrest ⇒ Page 72-2
- Completely unhook underside clip section - 14 -.
- Sport seat: Unhook tensioning wire - 3 - at securing points - 13 -.
- Slide cover up.
- Sport seat: Cut cover clamps - 4 -.
- Unhook upholstery wire - 2 -.
- Remove guides - 8 - or - 9 - and take cover off.

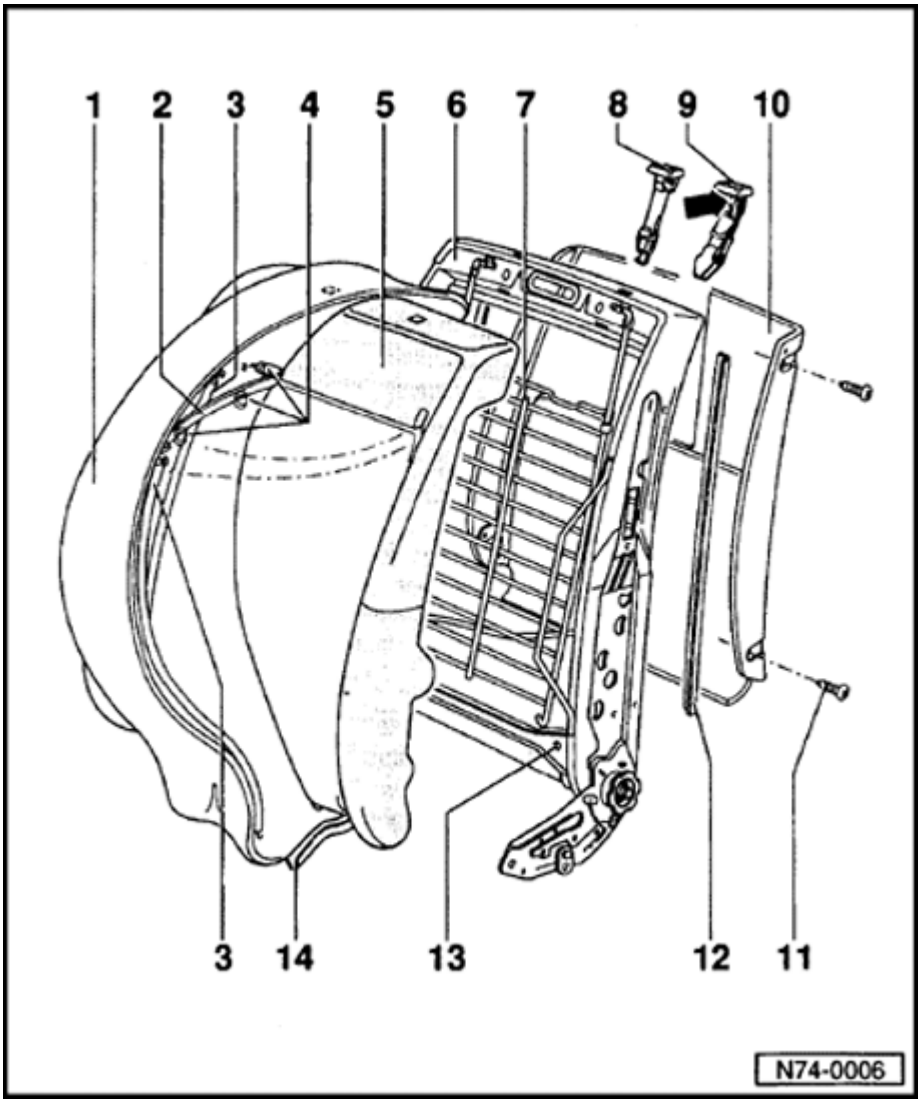

2 - Upholstery wire (standard and sport seats)

- Connected in padding. Disconnect and connect with awl VAG1636.

3 - Upholstery wire (sport seat only)

- Hook into upholstery wire at top and at bottom - 13 -.
- Fasten upholstery wire going across with upholstery clips to upper rod - 7 -.

4 - Upholstery clips (3 clips, for sport seat only)

- Install with upholstery clip pliers VAG1634.

5 - Padding

6 - Backrest frame

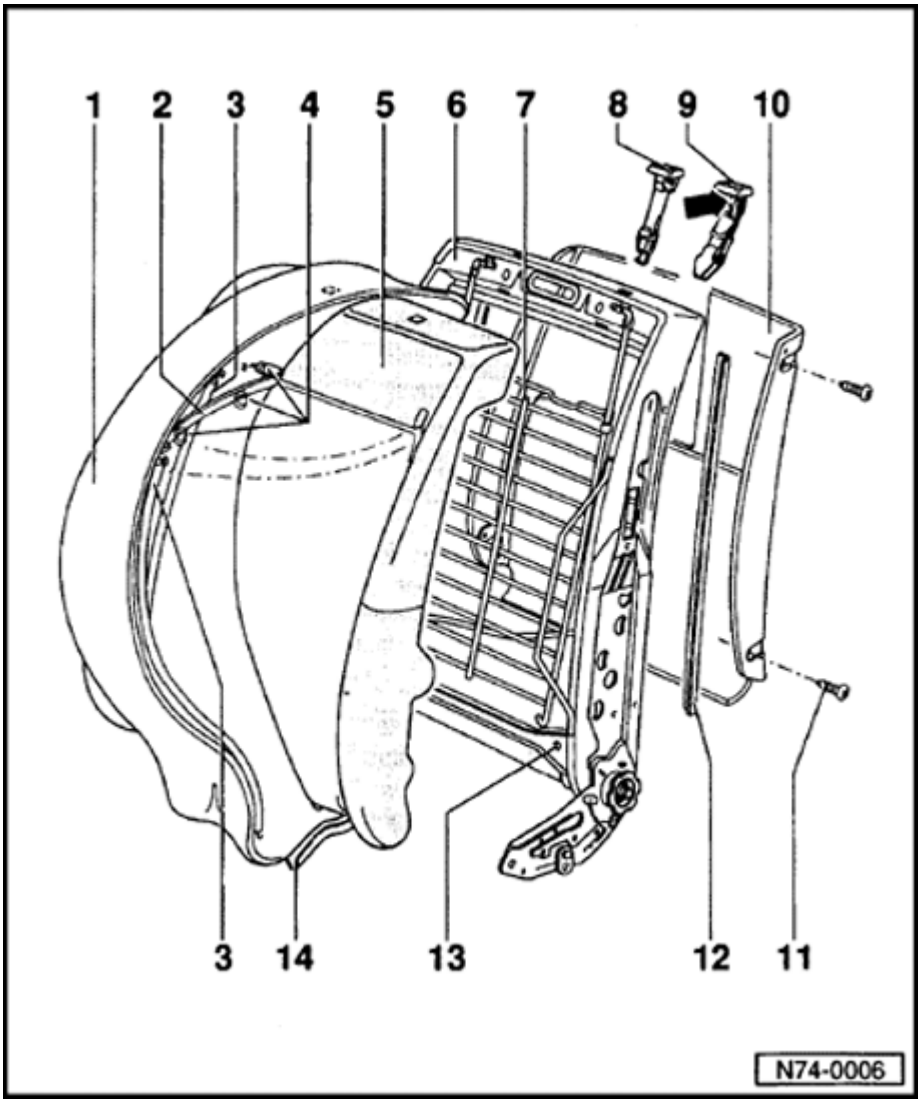

7 - Cross rod

- For attaching upholstery wire to backrest frame, sport seat only.

8 - Guide (for CL version)

- To remove, push cover up, squeeze ends of guide together and pull out.

9 - Guide (GL and GT versions)

- To remove, press locking lug (arrow) with screwdriver toward rear and pull out guide.

10 - Trim (Taxi only)

11 - Screw

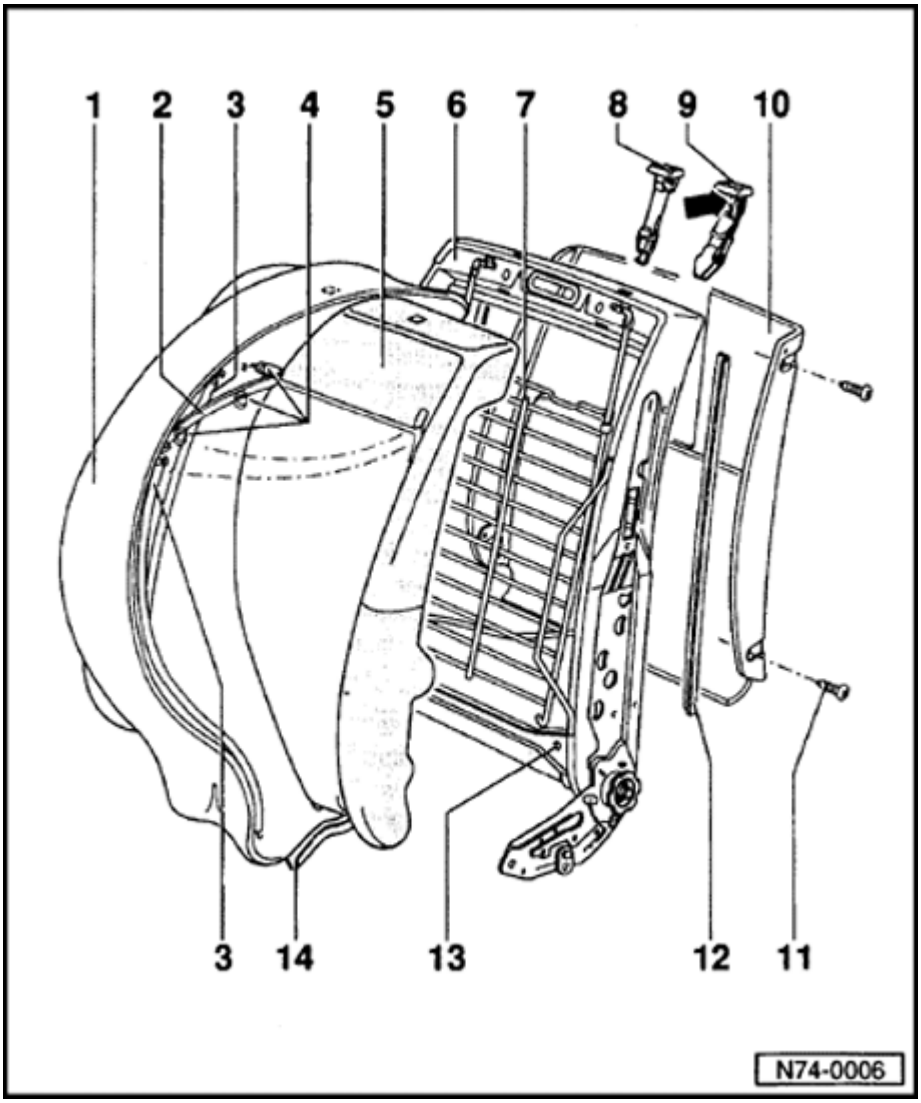

12 - Protective strip

- Glue on with adhesive D 001 200.

13 - Securing point for upholstery wire

14 - Clip section

- Located on front and back side of cover.

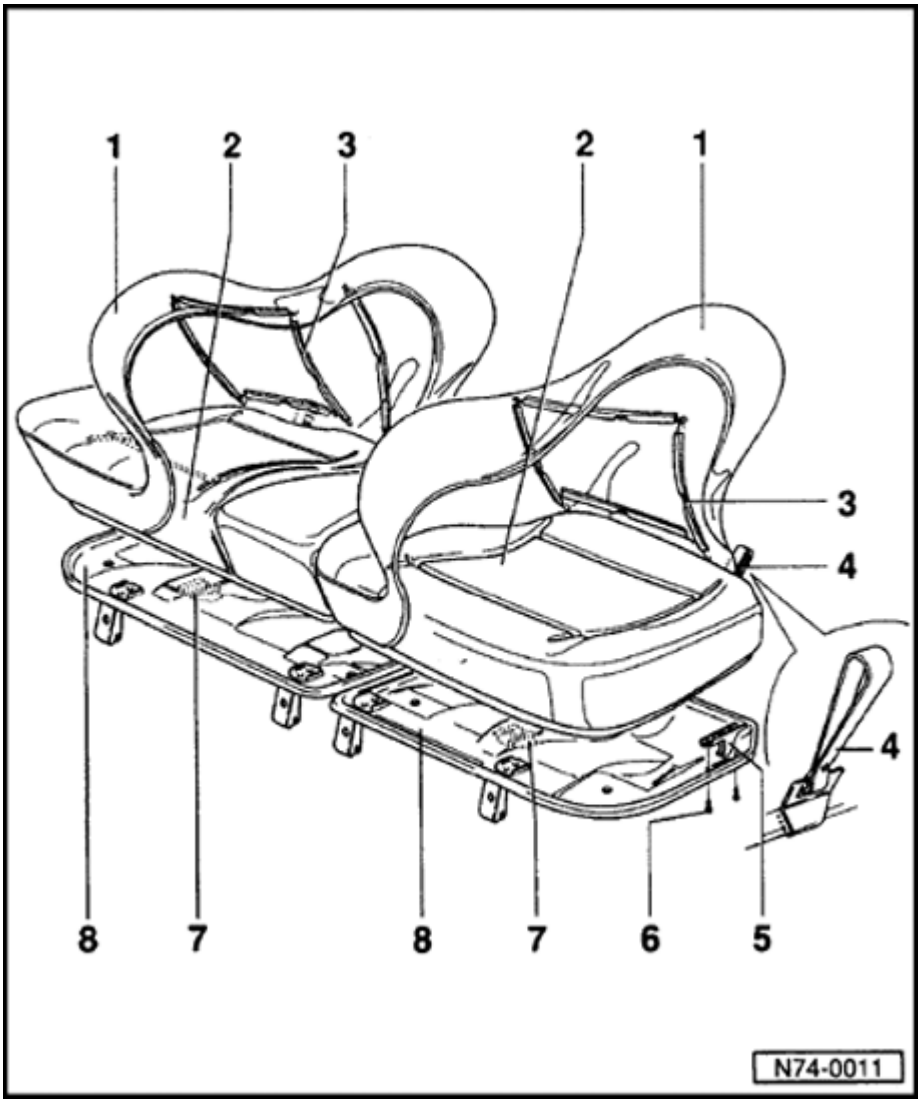

Rear seat cover and padding, removing and installing

1 - Cover

- Removing:
  - Pry out welt from seat pan flange - 8 -.
  - Unhook upholstery wires.

2 - Padding

3 - Upholstery wire

- Hooked into padding, remove and install with awl VAG1636.

4 - Strap

- Hooked into seat pan flange.

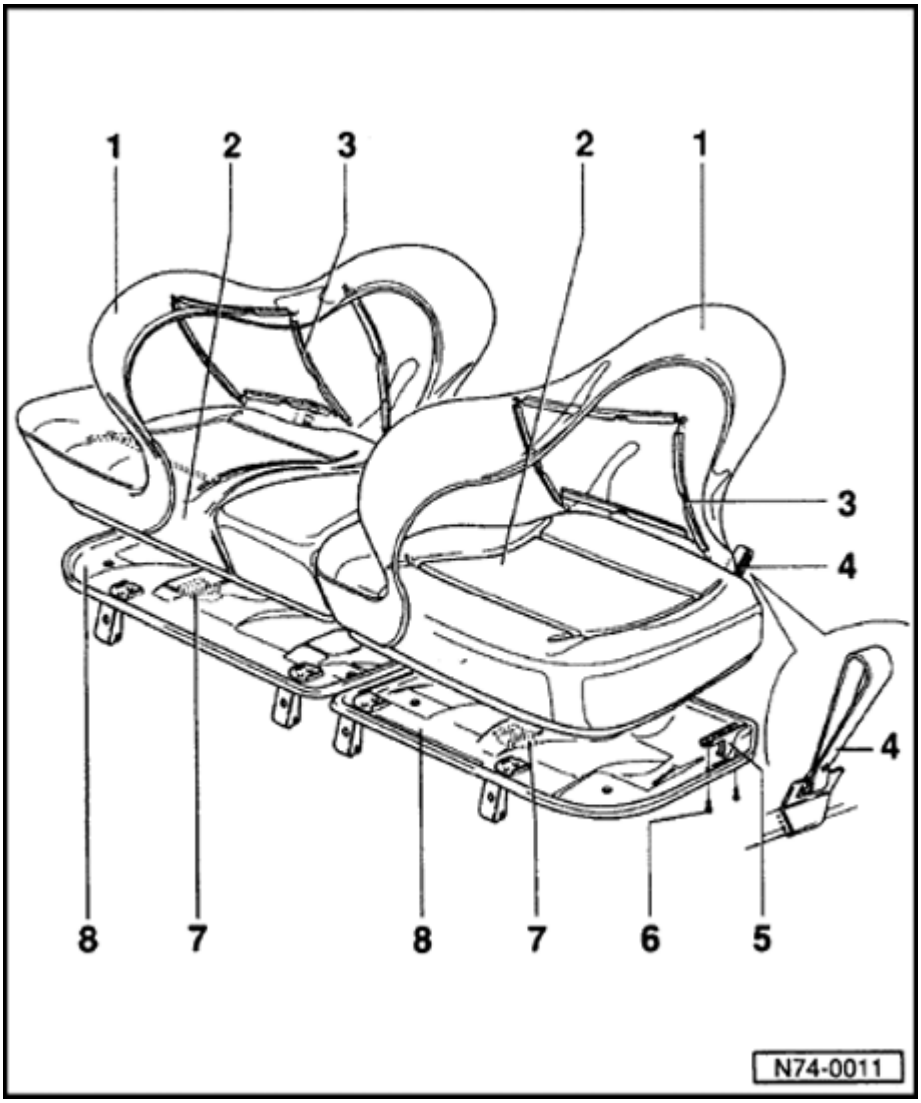

5 - Locking hook

- To remove, loosen seat cover on the side.

6 - Self-tapping screw

7 - Support with rubber pad

8 - Seat pan

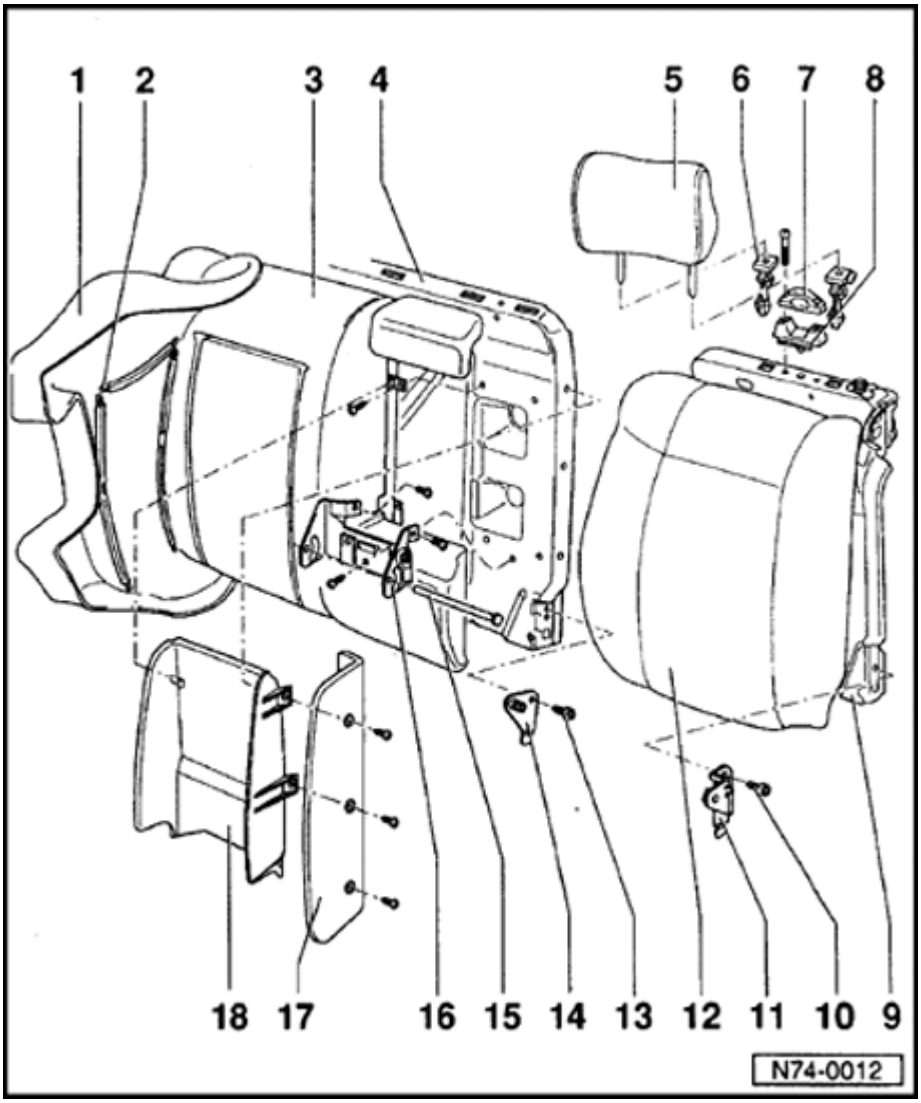

Backrest (split) covers and padding, removing and installing

1 - Cover (dual seat)

- Lock, removing and installing ⇒ Page 74-19
- Center armrest, removing ⇒ Page 74-22
- Upholstery clips, removing and installing ⇒ Page 74-23
- Cover is fastened with sewn-in clamping strip to flange of rear panel.

2 - Upholstery wire

- Hooked into padding, remove and reinstall with awl VAG1636.

3 - Padding

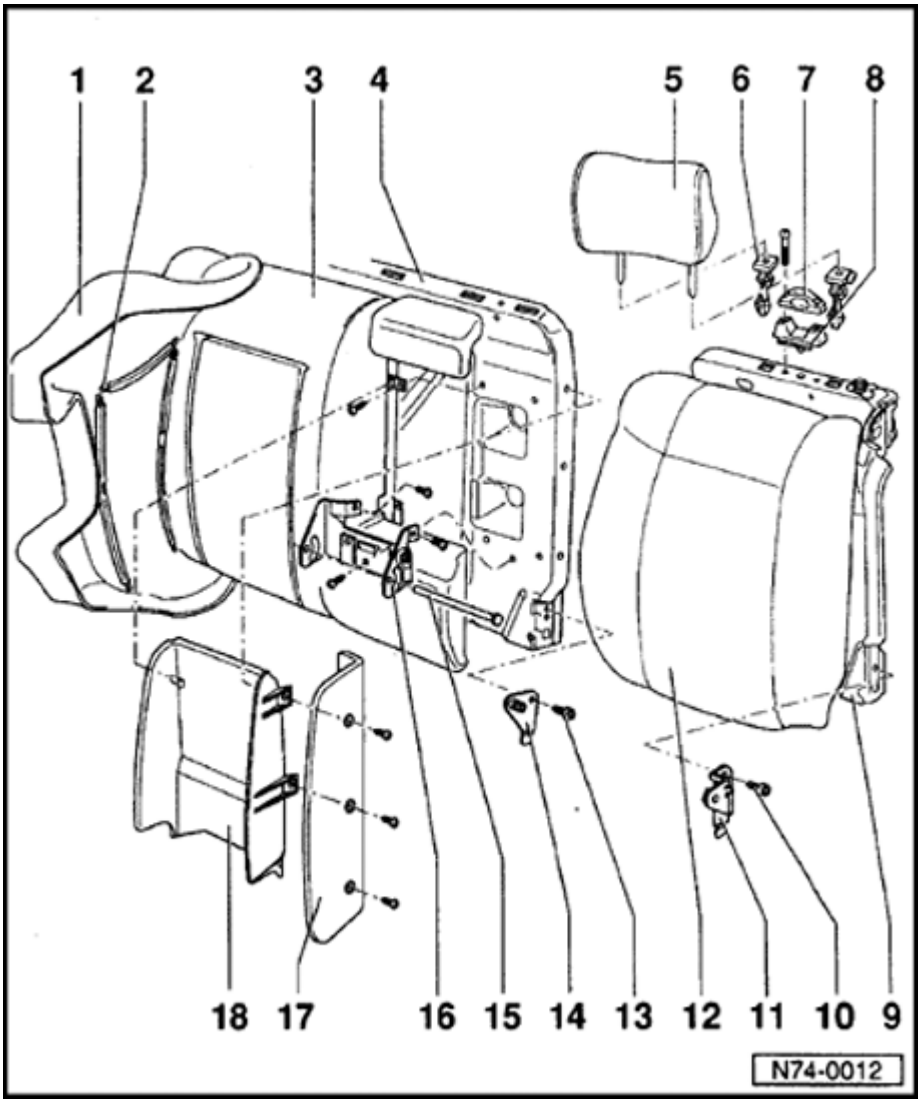

4 - Rear panel (dual seat)

- Trim is self-adhesive. Remove protective foil before assembly. If necessary re-glue with adhesive D 001 200.

5 - Head restraint

- To remove, press button on guide and pull out restraint.

6 - Guide

- To remove, loosen cover at rear panel, squeeze end of guide together and pull out guide.
- Installation position for Sedan: Guide button must point toward right.
- Installation position for Wagon: Guide button must point toward left.

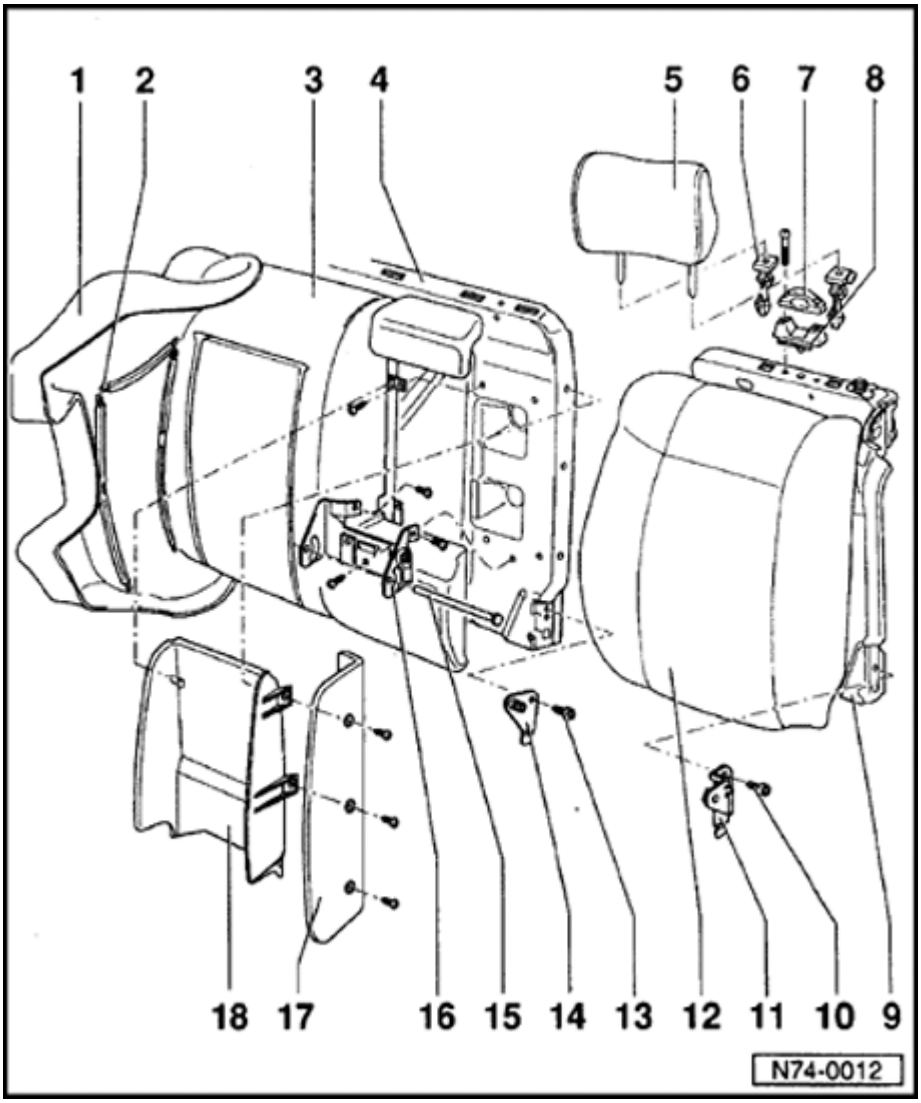

7 - Support bracket

- Wagon only.

8 - Spacer block

- Wagon only.
- Clipped into rear panel.

9 - Rear panel (single seat)

- Trim is self-adhesive. Remove protective foil before assembly. If necessary re-glue with adhesive D 001 200.

10 - Socket-head bolt

11 - Adapter

12 - Cover (single seat)

- Lock, removing and installing ⇒ Page 74-19

13 - Socket-head bolt

14 - Adapter

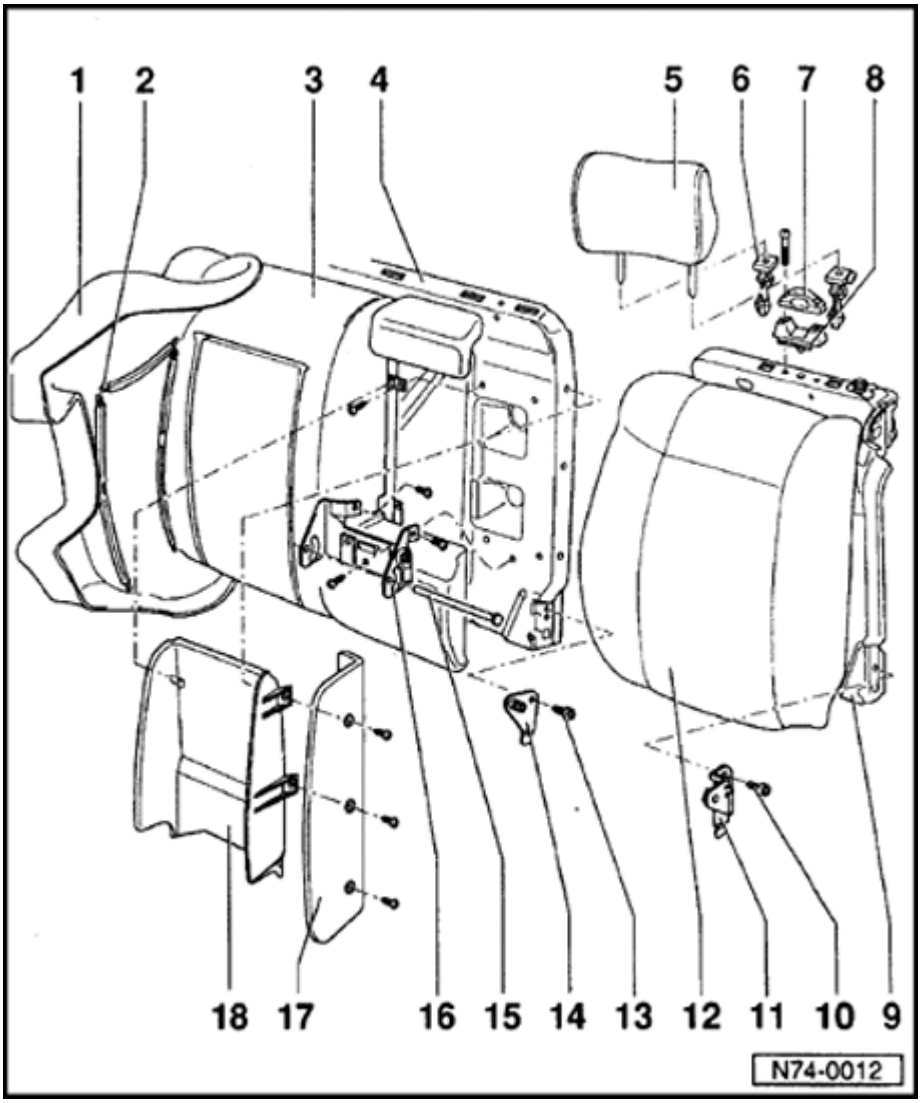

15 - Mounting pin

- For center armrest.

16 - Bracket for armrest

17 - Trim piece

18 - Box section

- Note locking lug when removing and installing.

74-19

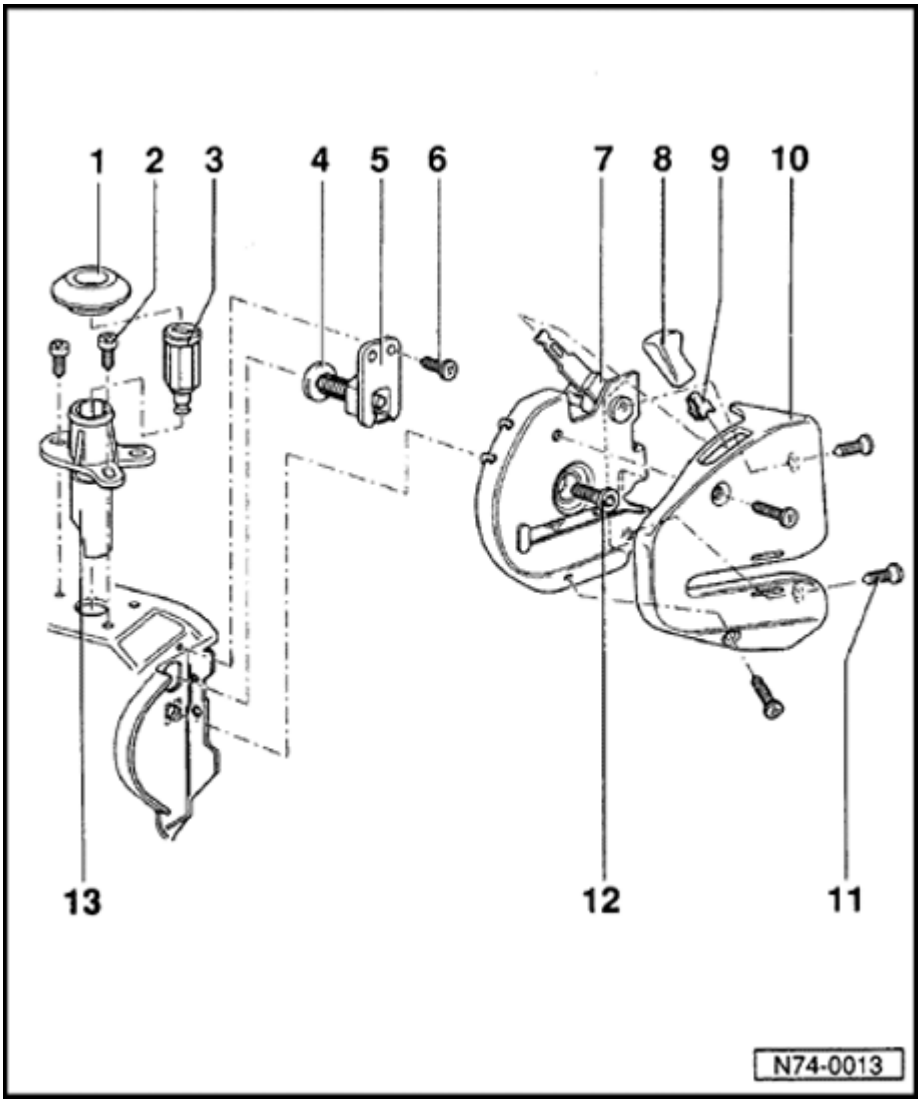

Backrest lock, removing and installing

1 - Escutcheon

2 - Screw

3 - Lock cylinder

4 - Locking pin

- With spring.

5 - Guide

6 - Screw

7 - Lock

8 - Release lever

9 - Clip

10 - Cover

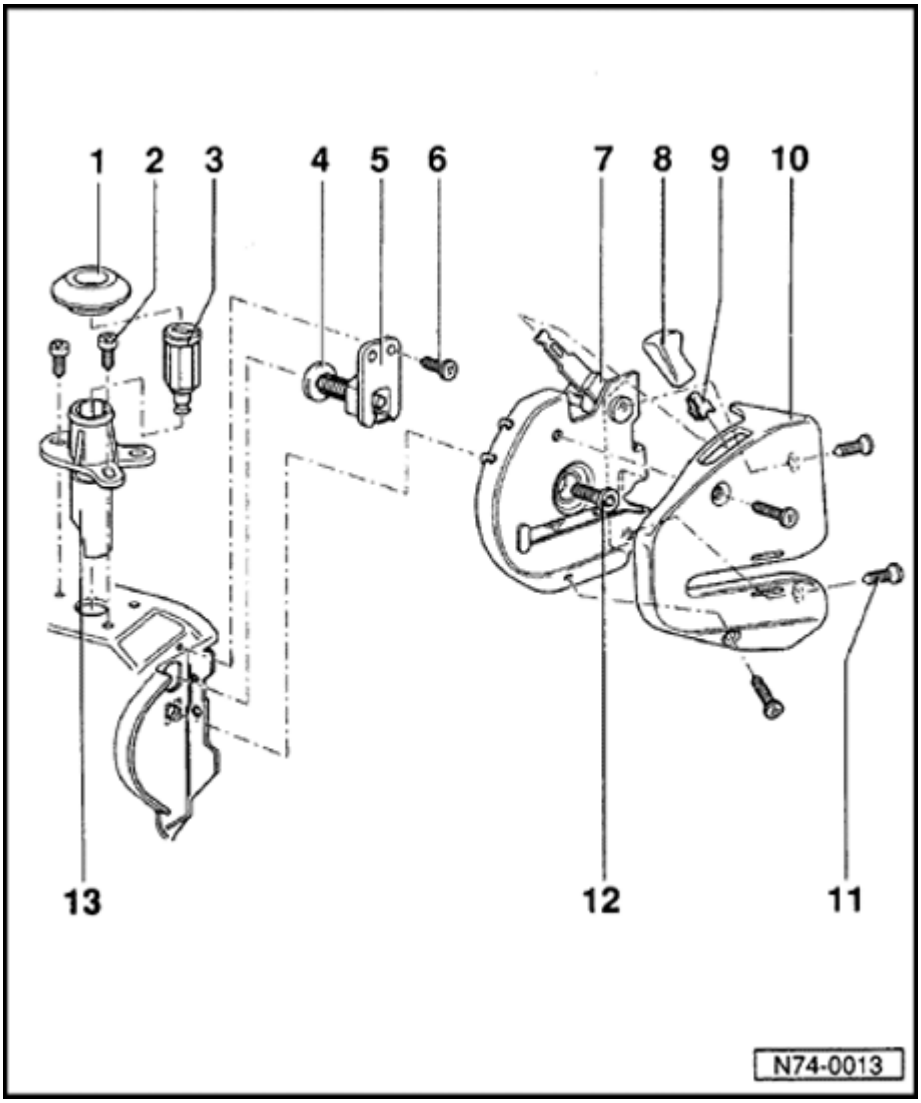

11 - Screw

12 - Counter-sunk screw

13 - Lock housing

- To remove, remove cover and padding ⇒ Page 74-15

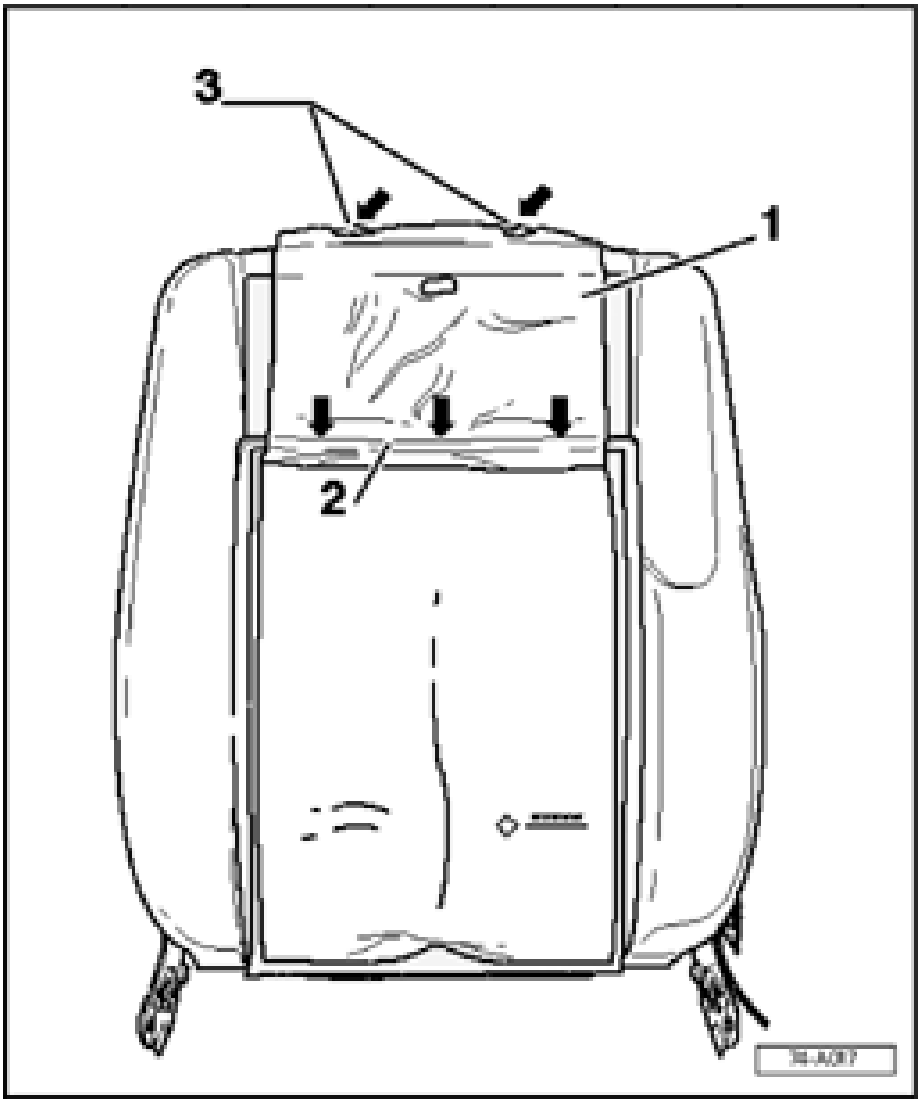

Heater element for seat, installing

Note:

When installing material -1- of heater element, it must be connected with backrest cover and backrest frame -2- in the groove (depression) utilizing two sided tape. The heater element must be installed over the head rest adjuster guide holes -3- and secured with head rest guide.

Center armrest, removing

- Fold down left backrest.

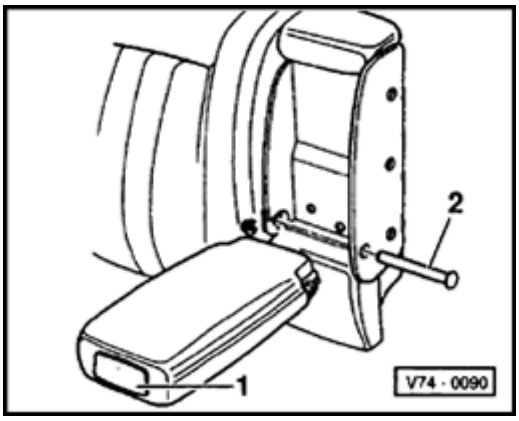

- Press release button -1- and fold down center armrest.
- Remove mounting pin -2-.
- Press release button -1- and remove armrest.

Upholstery clips, removing and installing

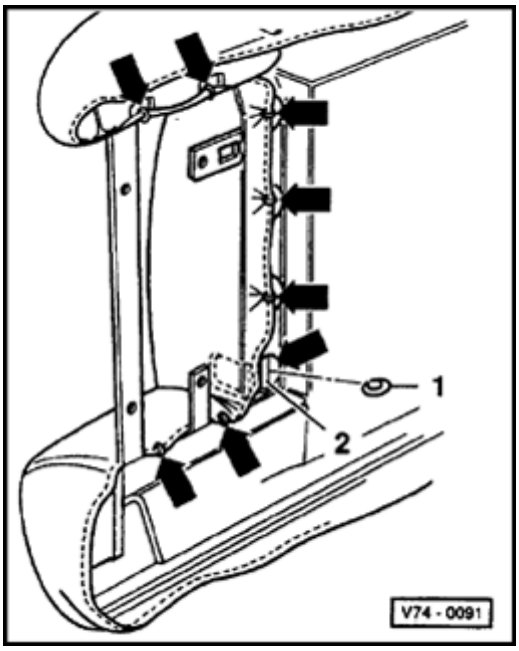

Removing

- Cut through upholstery clips.

Installing

- Install upholstery clips -1- with upholstery clip pliers VAG1634 to upholstery wire -2-.

Volkswagen Passat

Official Factory Repair Manual

1995, 1996, 1997
Gasoline, Turbo Diesel, TDI
4-cylinder and VR6, including wagon

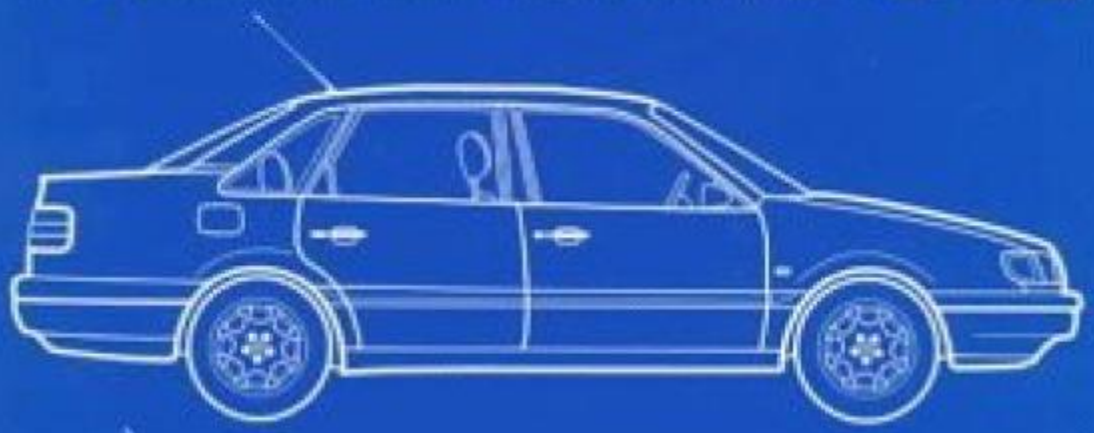

Robert Bentley

PASSAT '95 - '97

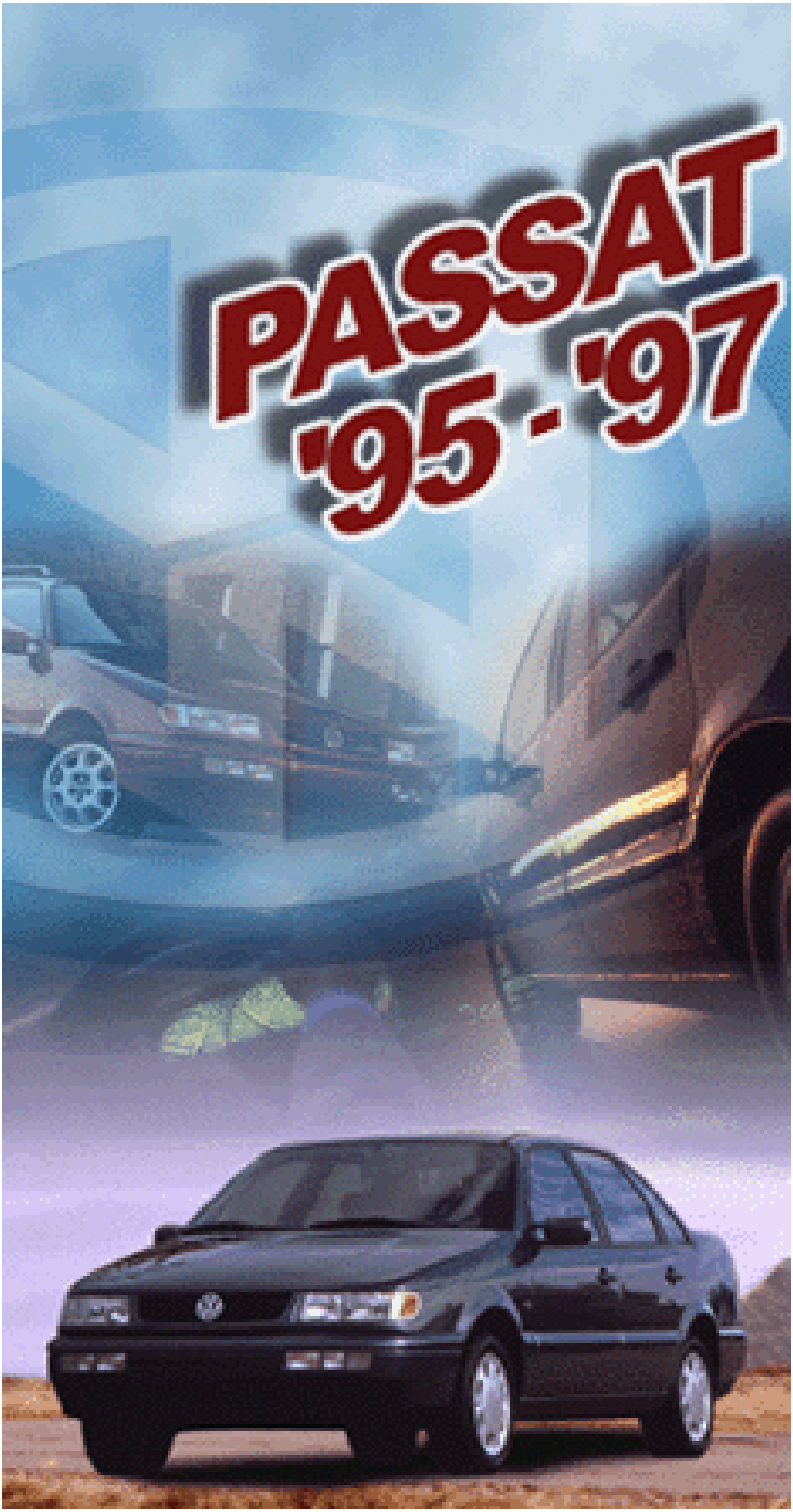

Heating Air Conditioning

80 - Heating, Ventilation

Heating and ventilation system
Heating and ventilation system, assembly
Heating and ventilation unit, assembly
Heating and ventilation cables, installing and adjusting
Heating and ventilation controls, assembly

87 - Air conditioning

A/C refrigerant system, notes
Safety measures
A/C refrigerant R-134a, properties
Basics when working on A/C refrigerant system R-134a

Manual A/C
Heating and A/C components in passenger compartment, servicing
Heating and A/C cables, installing and adjusting
Heating and A/C components in engine compartment, servicing
Vacuum hose layout
A/C clutch -N25- (Sanden), servicing (compressor removed)

Compressor bracket, removing and installing
4-cyl. gasoline engine
4-cyl. TDI engine
6-cyl. engine

A/C refrigerant system
A/C refrigerant system, identification
A/C refrigerant system, component overview

A/C refrigerant system, servicing
Expansion valve, removing
Condensor, removing
Heating and A/C unit, removing and assembly
A/C refrigerant system, replacing components
A/C refrigerant system pressures and temperatures, checking
A/C refrigerant system, testing with pressure gauges
A/C refrigerant system, discharging
A/C refrigerant system, flushing with compressed air and nitrogen
A/C refrigerant system, evacuating and recharging

A/C refrigerant system, troubleshooting
Compressor noisy
A/C refrigerant system pressures, checking
A/C refrigerant system cooling performance, checking
A/C refrigerant system, checking for leaks

A/C refrigerant system, capacities
Refrigerant R-134a, capacity
Refrigerant (PAG) oil R-134a, capacity
Refrigerant (PAG) oil R-134a, identification
Refrigerant (PAG) oil R-134a, distribution

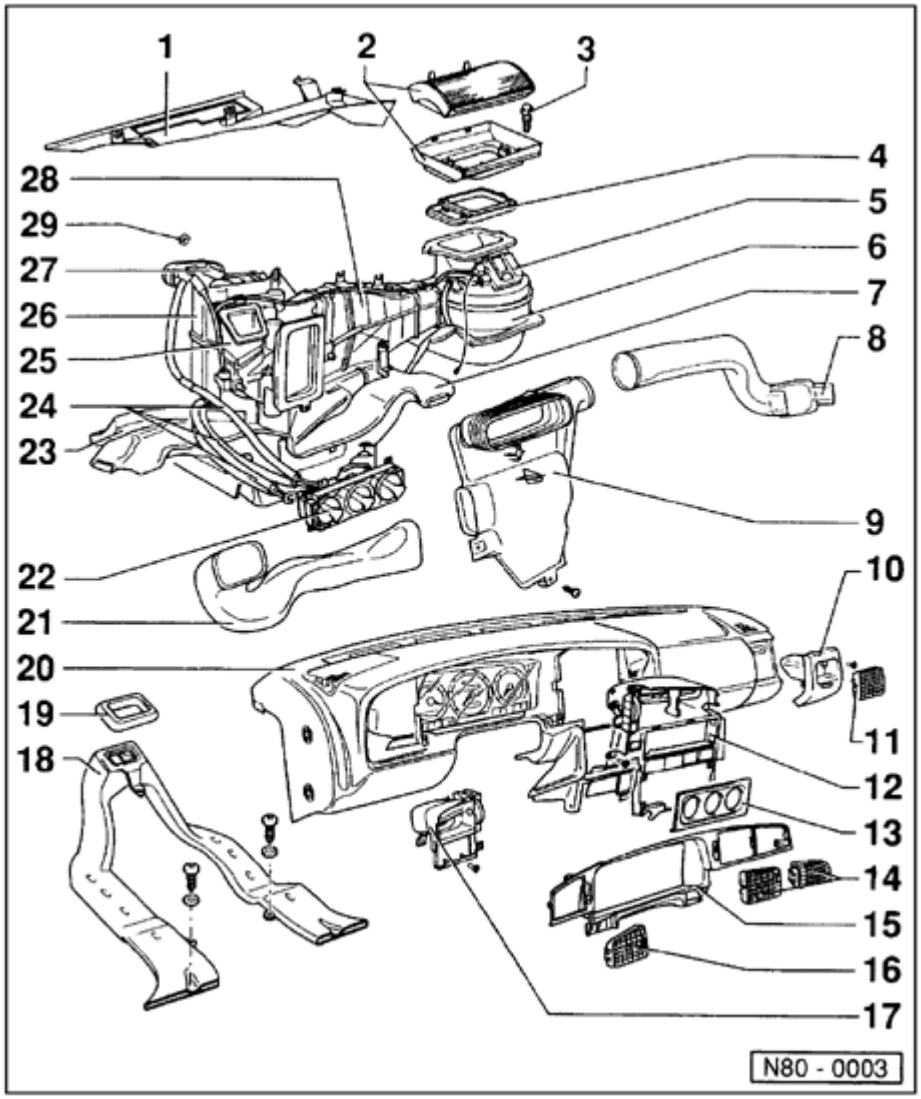

Heating and ventilation system

Heating and ventilation system, assembly

CAUTION!

- ***Obtain the anti-theft radio security code.***
- ***Switch the ignition off.***
- ***Disconnect the battery Ground (GND) strap.***
- ***After reconnecting battery, re-code and check operation of anti-theft radio. Also check operation of clock and power windows according to Repair Manual and/or Owner s Manual.***

1 - Plenum chamber cover

2 - Dust and pollen filter

- Removing ⇒ Fig. 5

3 - Hex screw with shank M6x22

- 5 Nm (44 in lb)

4 - Gasket

80-2

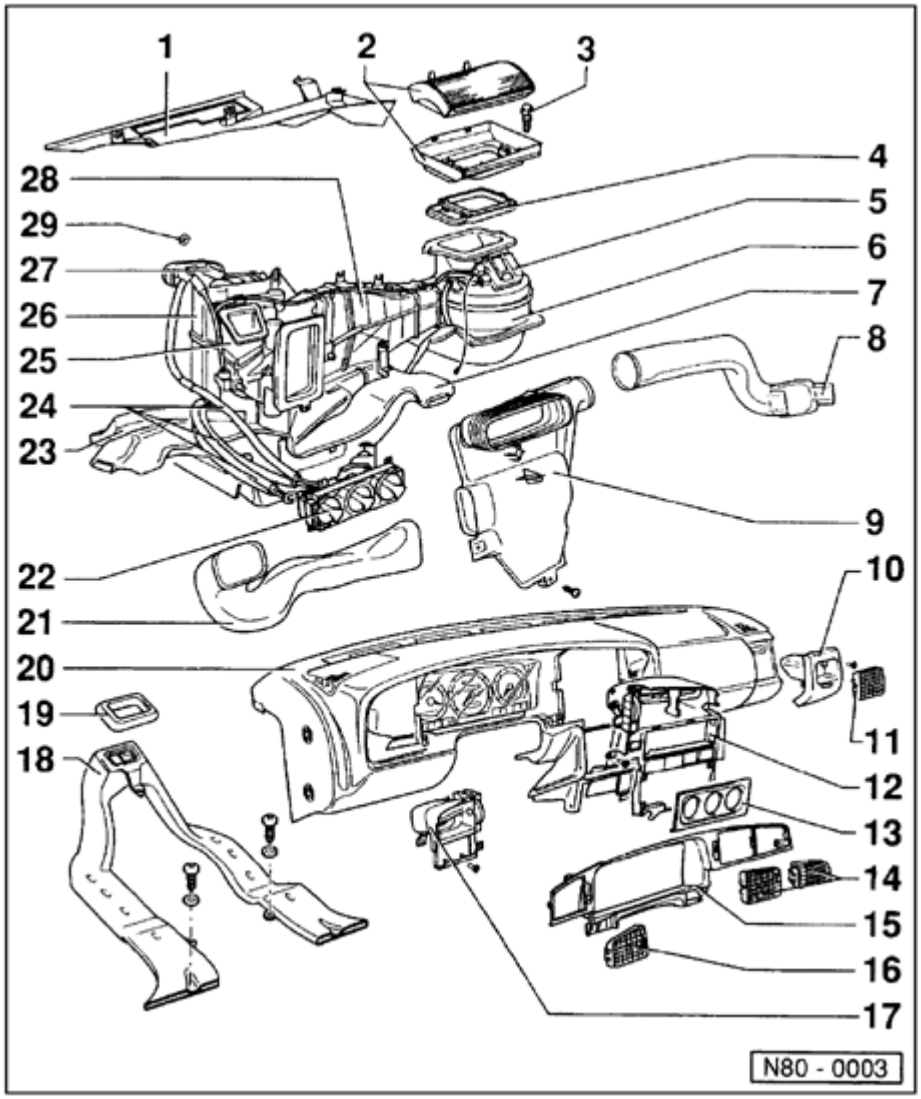

5 - Fresh Air Blower Series Resistance with Fuse -N24-

- Removing and installing ⇒ Fig. 1

6 - Fresh air blower -V2-

- Removing ⇒ Fig. 2

7 - Footwell outlet

- Replacing: Remove shelf on drivers and passenger side, center console, instrument panel bracket and pedal cluster cover - 23 -

8 - Air duct

9 - Air distribution duct

- Replacing center outlet -12-, heating and fresh air controls -22-, remove shelf on passenger side; Loosen instrument panel -20- and lift

80-3

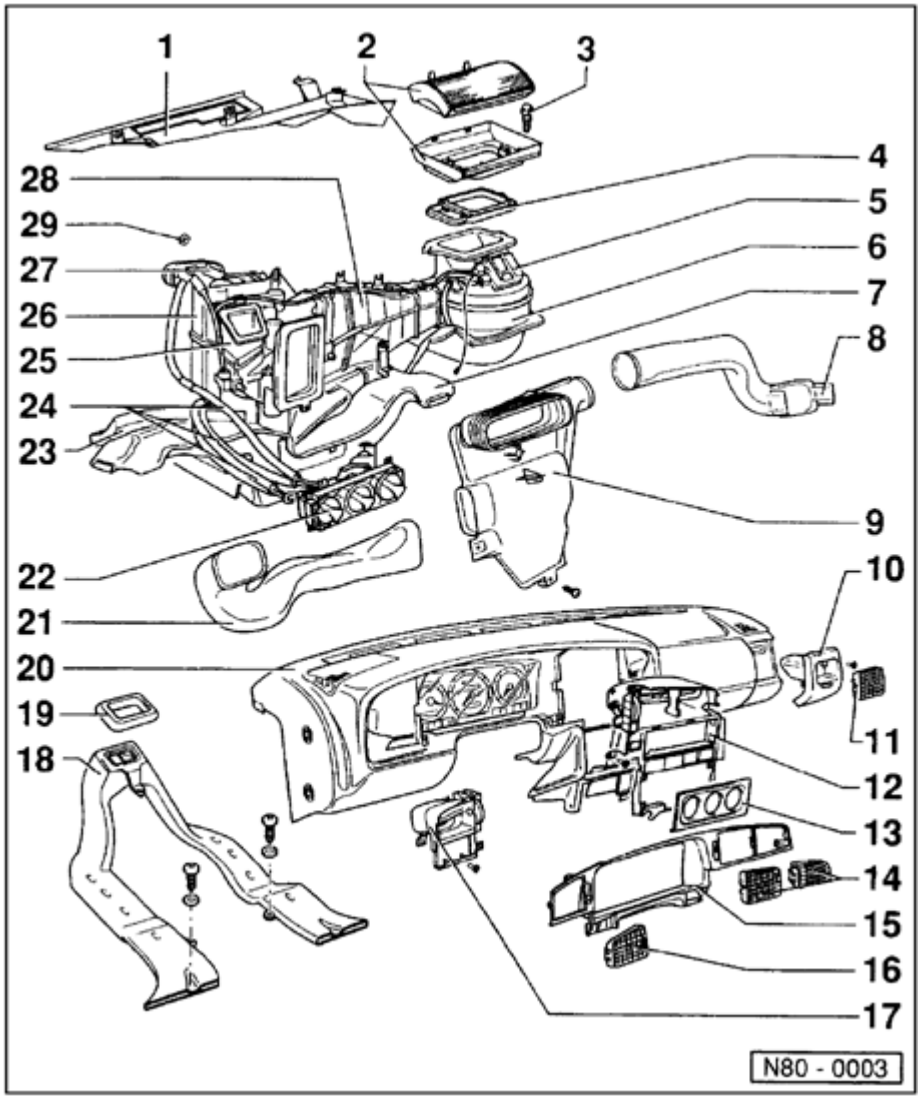

10 - Right air outlet

- Removing ⇒ Fig. 8

11 - Grille

- For right air outlet

12 - Center air outlet

- Removing ⇒ Fig. 7

13 - Control panel trim

14 - Grilles

- For center outlet

15 - Instrument panel trim

- Removing ⇒ Fig. 4

16 - Grille

- For left air outlet

17 - Left air outlet

- Removing ⇒ Fig. 6

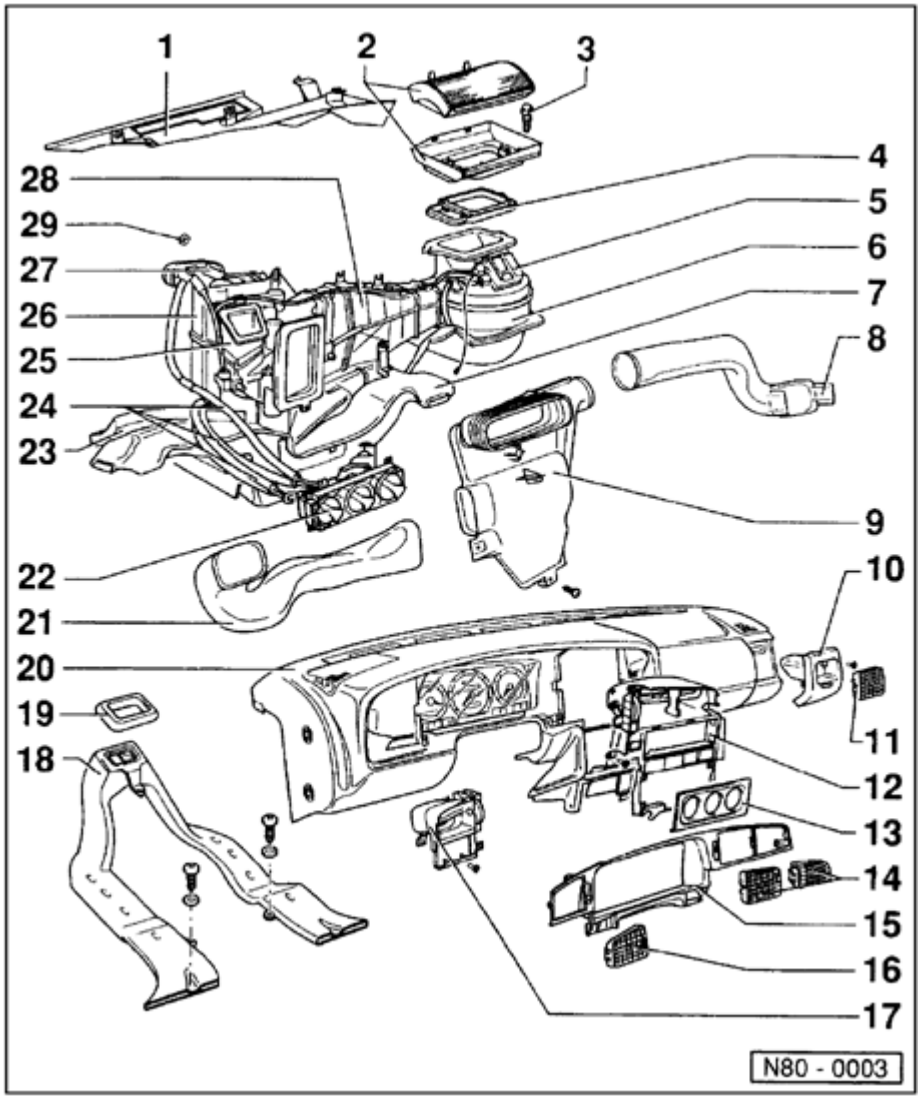

18 - Rear duct

- Replacing: Remove console, instrument panel bracket, pedal cluster cover - 23 -, footwell outlet - 7 -

19 - Rear duct seal

- Replacing: Remove console, instrument panel bracket, pedal cluster cover - 23 -, footwell outlet - 7 -

20 - Instrument panel

- Removing and installing

⇒ *Repair Manual, Body Exterior, Interior, Repair Group 70 Removing and installing instrument panel*

21 - Left air duct

22 - Heating and ventilation controls

- Removing and installing ⇒ Fig. 3
- Assembly ⇒ Page 80-21
- Installing and adjusting cables ⇒ Page 80-15

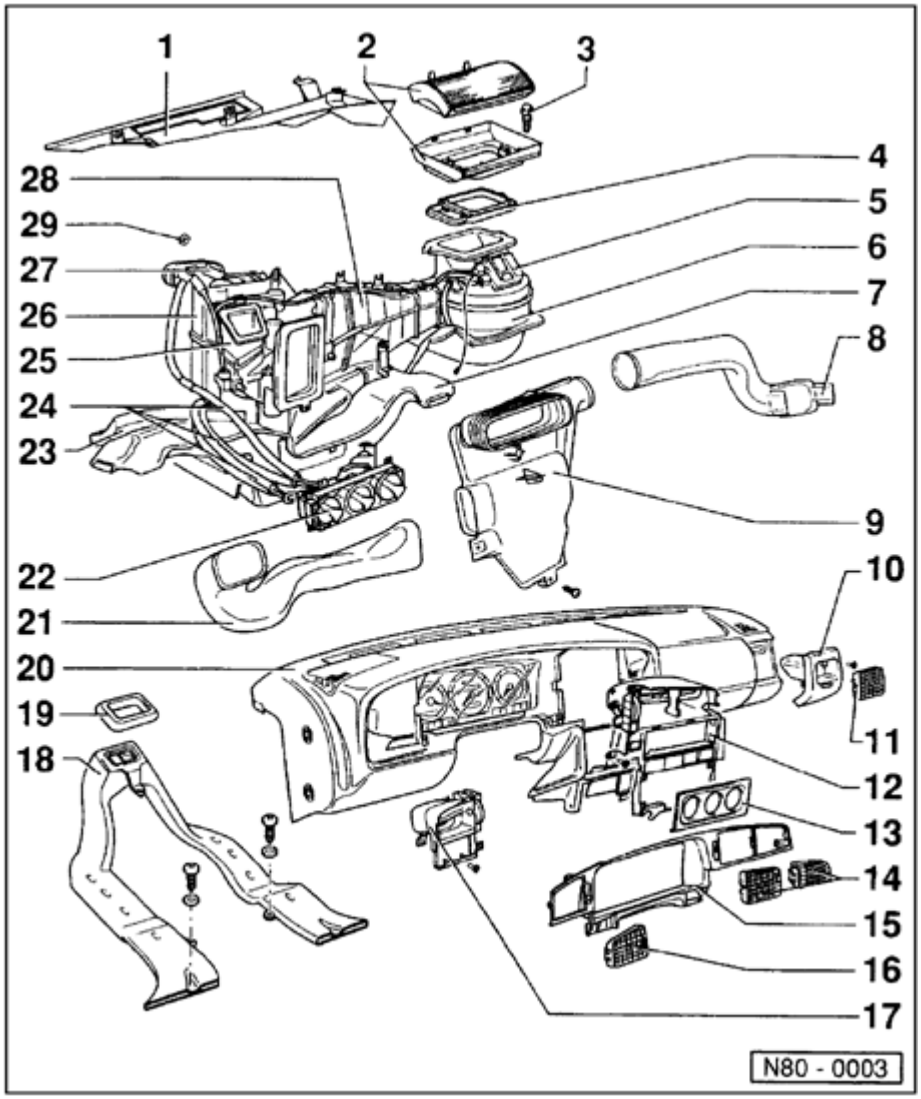

23 - Pedal cluster cover

24 - Heating and ventilation cables

- Replacing: First remove pedal cluster cover - 23 - and foot well outlet - 7 -
- Removing and installing ⇒ Page 80-15

25 - Intermediate duct

- With gasket
- Replacing - remove instrument panel first

26 - Heating and ventilation unit

Contains:

- Heater core
- Temperature flap
- Center flap
- Footwell/defrost flap
- Do not disassemble further
- Assembly ⇒ Page 80-12
- Removing: Remove instrument panel items -22- to 28- ⇒ Fig. 9

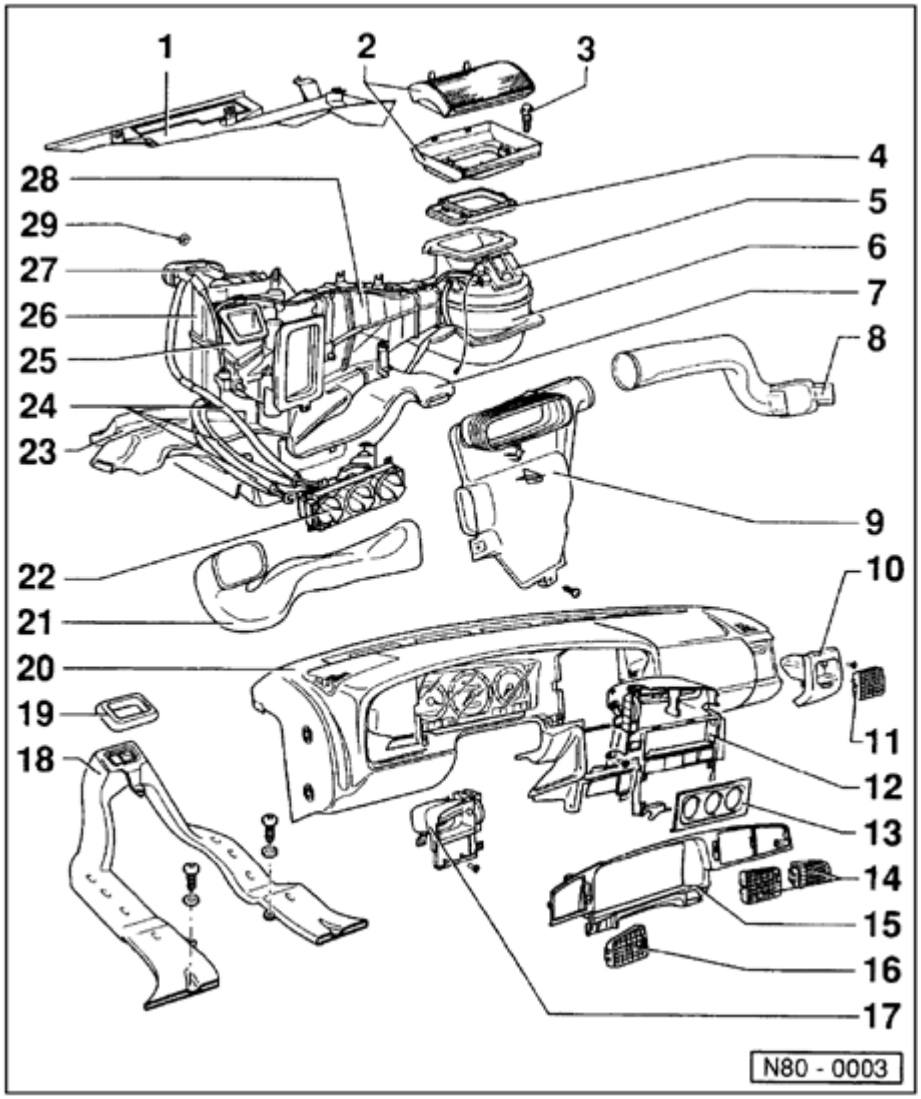

27 - Heater core

- Replacing ⇒ Page 80-12
- Always replace coolant after removal/replacement.

28 - Air duct with main shut-off flap

- Replacing: Remove instrument panel and items -22- to 28- ⇒ Fig. 9
- Installing: ⇒ Page 80-12

29 - Hex nut M6

- 5 Nm (44 in lb)

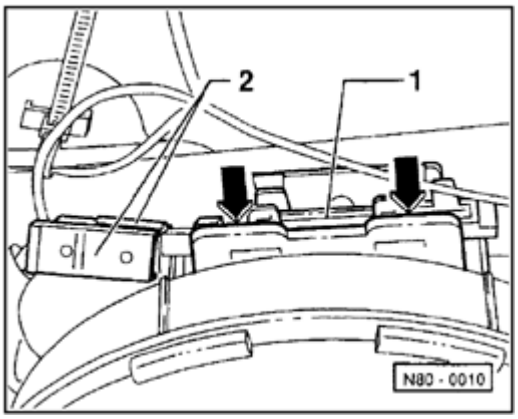

Fig. 1 Fresh Air Blower Series Resistance with Fuse -N24-, removing

Removing:

- Remove shelf on passenger side
- Pull off connections -2-
- Press retainer -arrow- down and remove series resistor -1-

Installing:

- Seal surface between series resistor -1- and air duct before installing with AMV 176 000 05.

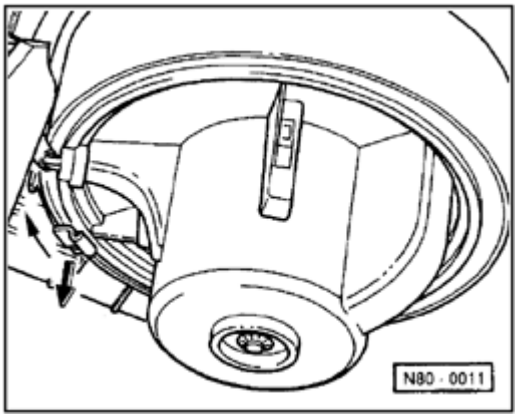

Fig. 2 Fresh Air Blower -V2-, removing

- Shelf on right side, remove
- Move air duct cover to side.
- Push retaining clips down with a screwdriver, turn fresh air blower clockwise and remove.

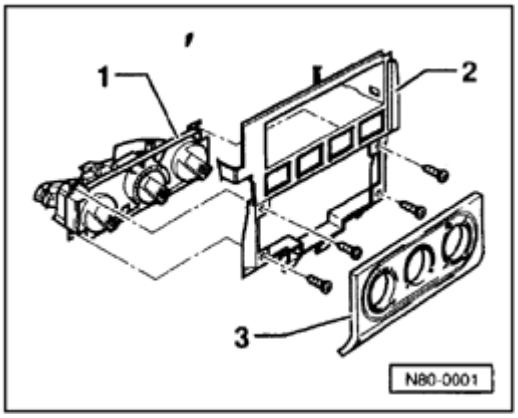

Fig. 3 Heating and ventilation controls, removing and installing

Removing:

- Heater control trim panel -3-, pull off
- Central outlet -2- ⇒ Fig. 7 , remove
- Heater controls -1- with cables attached, pull out of instrument panel.

Installing:

- Secure cables to removed controls.

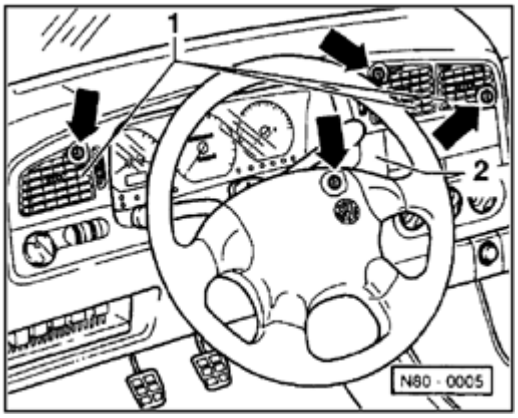

Fig. 4 Instrument panel trim, removing

- Carefully lift and remove adjustable grilles -1- with long nose pliers.
- Remove trim -2-.
- Remove 4 screws -arrows- and take out instrument panel trim housing.

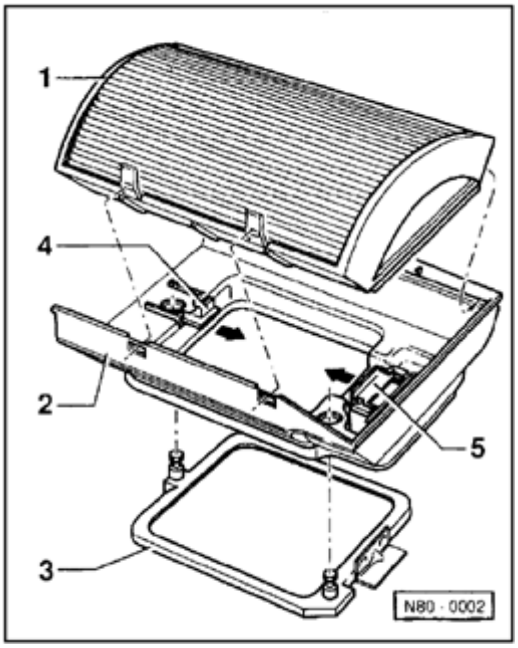

Fig. 5 Dust and pollen filter, removing.

1 - Filter element

2 - Filter housing

3 - Gasket

4 - Clip

5 - Clip

- Filter element, remove.
- Press clips -4- and -5- in direction of arrow and remove filter housing.

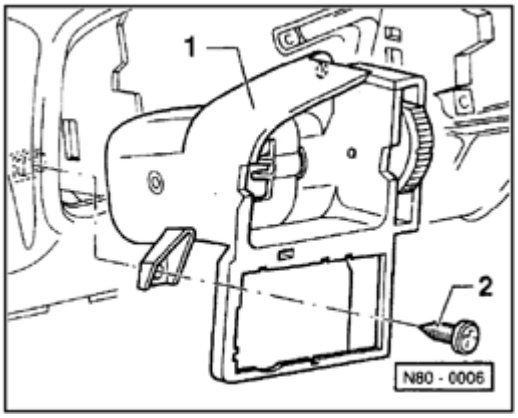

Fig. 6 Left air outlet, removing

- Instrument panel trim ⇒ Fig. 4 , remove.
- Light switch, remove.

⇒ *Repair Manual, Electrical Equipment, Repair Group 96*

- Bolt -2-, remove.
- Vent housing -1-, remove.

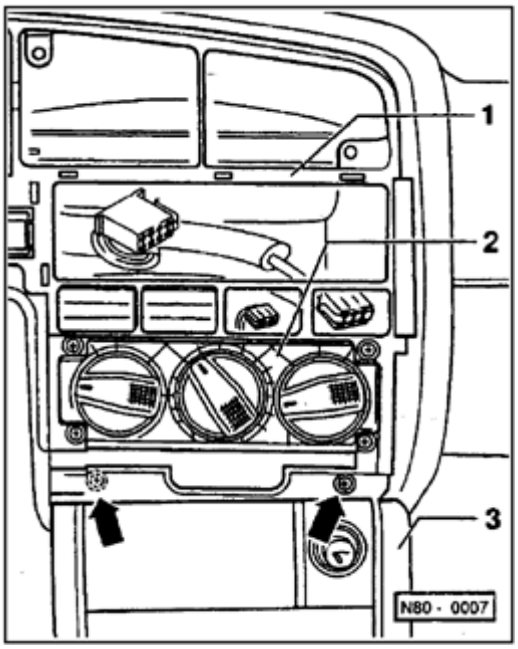

Fig. 7 Center air outlet, removing

- Instrument panel trim ⇒ Fig. 4 , remove.
- Radio, remove.
- Switch, remove.
- Remove control panel trim.
- Control -2-, remove
- Center console -3-, loosen
- Remove 2 screws -arrows- and take out central outlet -1-.

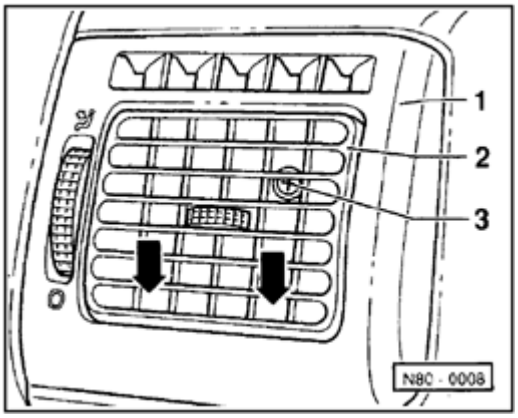

Fig. 8 Left air outlet, removing

- Carefully lift and remove adjustable grilles -2- with long nose pliers
- Remove screw -3- and disengage locating tabs -arrows-.
- Vent housing -1-, remove

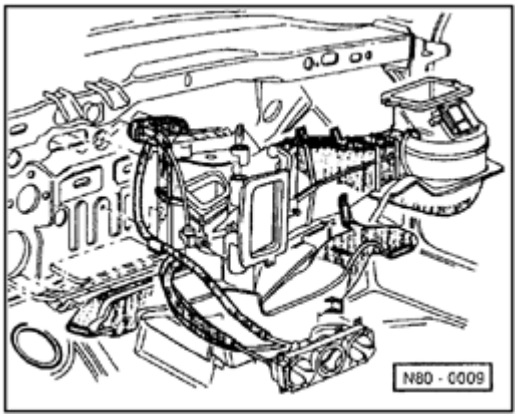

Fig. 9 Heating and ventilation unit installing

Note:

Close evaporator connections to ensure that no coolant enters passenger compartment when removing.

Installing:

- Pre-assemble hex nuts on engine bulkhead.
- Tighten hex nut with shank, in plenum chamber.
- Tighten engine bulkhead Hex nuts.

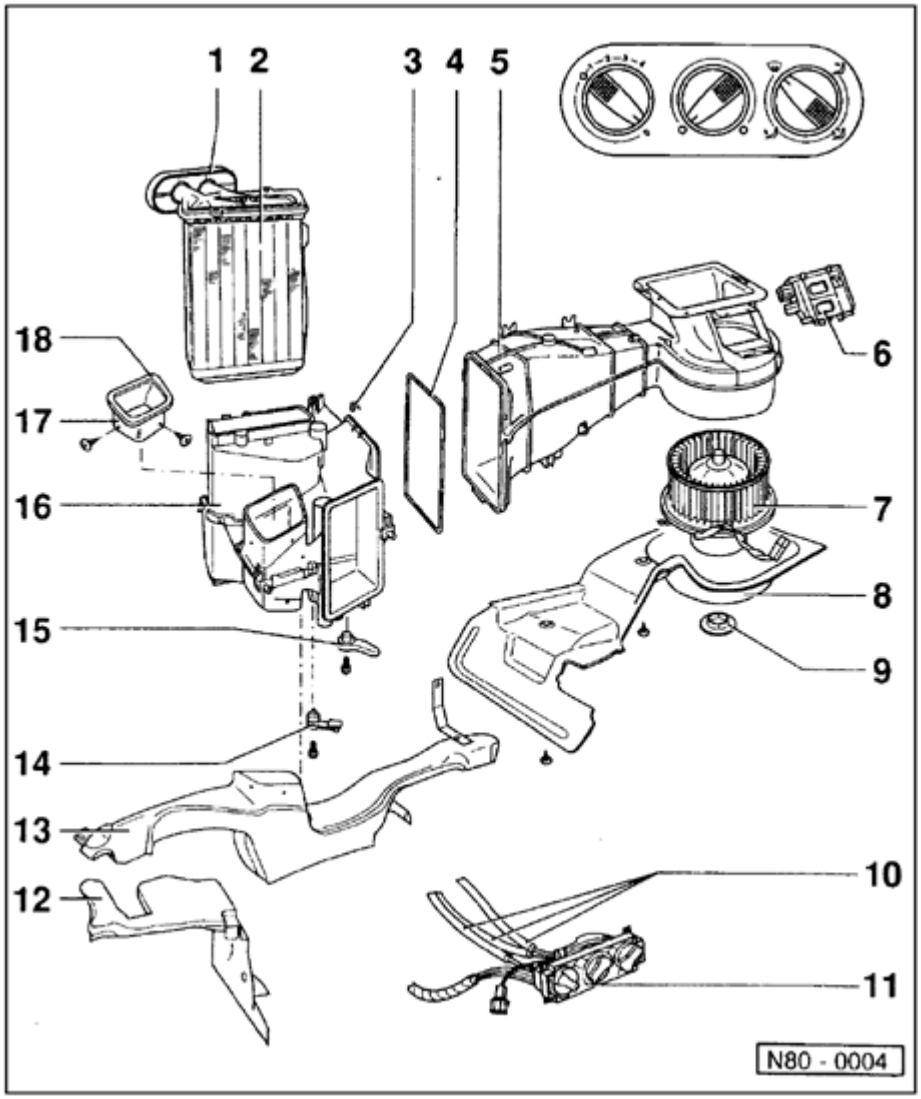

Heating and ventilation unit, assembly

1 - Gasket

- Replace

2 - Heater core

- Always replace coolant after removal/replacement
- Replacing:
  - Remove instrument panel.

⇒ *Repair Manual, Body-Interior, Repair Group 70*

  - Carefully pinch off both coolant hoses to heater core and disconnect hoses.
  - Seal off heater core to prevent coolant from running out.

CAUTION!

The cooling system is pressuri ed when the engine is warm. Wear gloves and other protection and carefully release system pressure if necessary, before performing repairs.

80-13

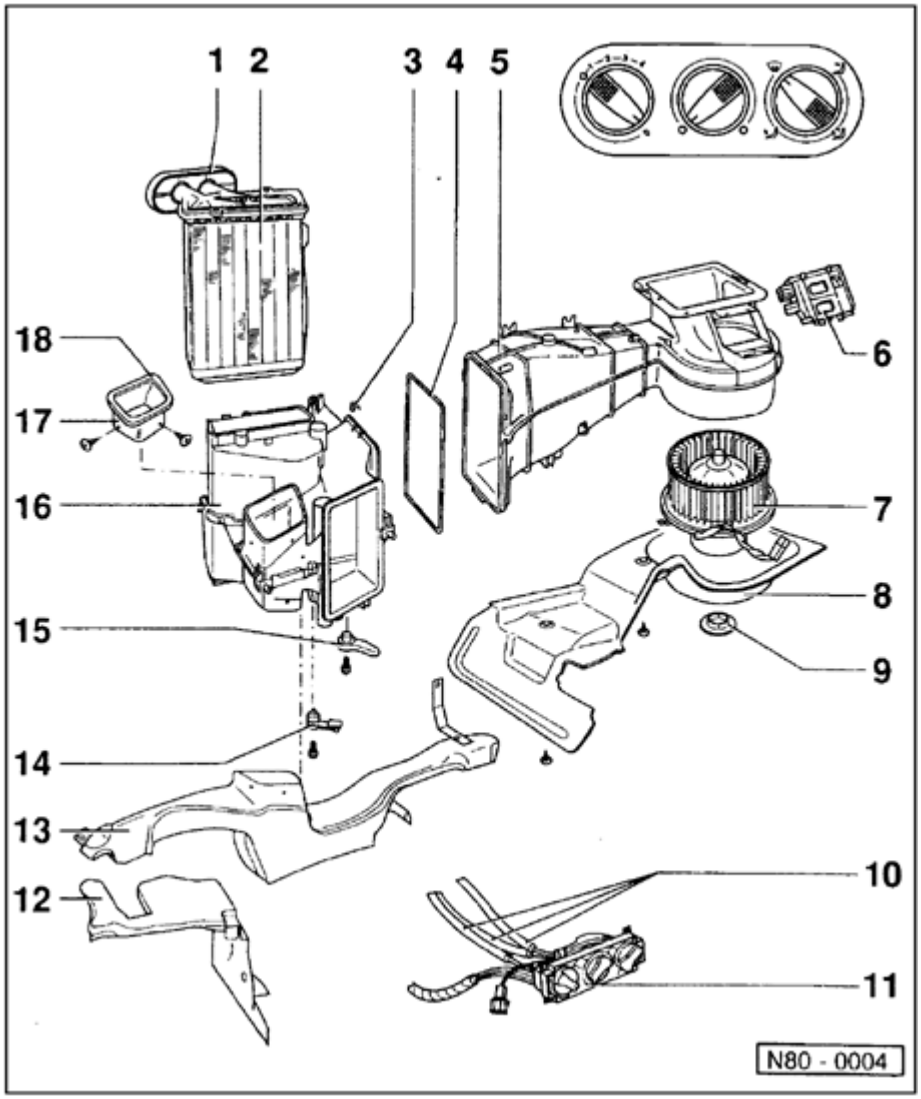

- Partially remove heating and ventilation unit.
- Press retainer clips and remove heater core.

♦ Gaskets must be glued, free of gaps all around.

♦ If catches do not engage when installing, then secure heat exchanger with screws.

3 - Clip

4 - Gasket

5 - Air duct with main shut-off flap

♦ Do not disassemble further

6 - Fresh Air Blower Series Resistance with Fuse -N24-

7 - Fresh air blower -V2-

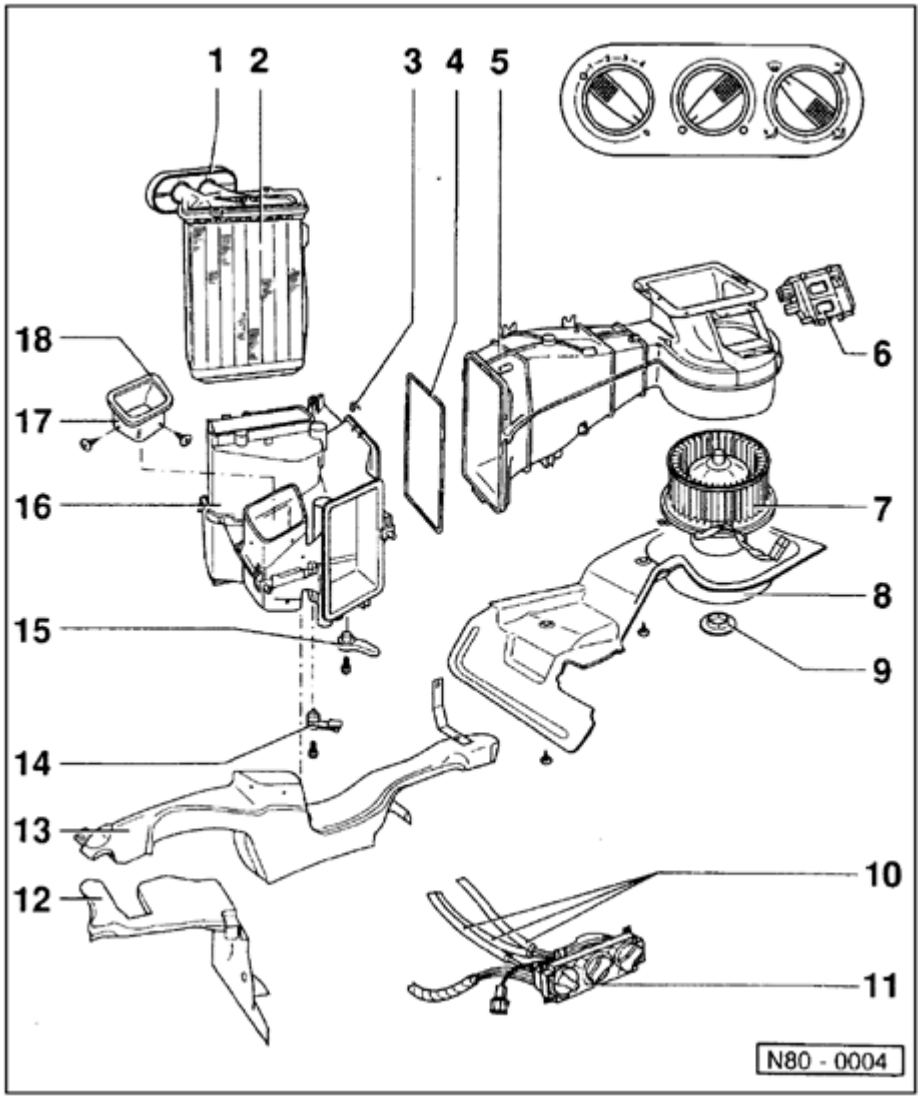

8 - Air duct cover

9 - Plug

10 - Cables

11 - Fresh air and heated air controls

12 - Pedal cluster cover

13 - Footwell outlet

14 - Temperature flap lever

15 - Center flap lever

16 - Air distribution housing

- Do not disassemble further

17 - Intermediate piece

18 - Gasket

- Always replace

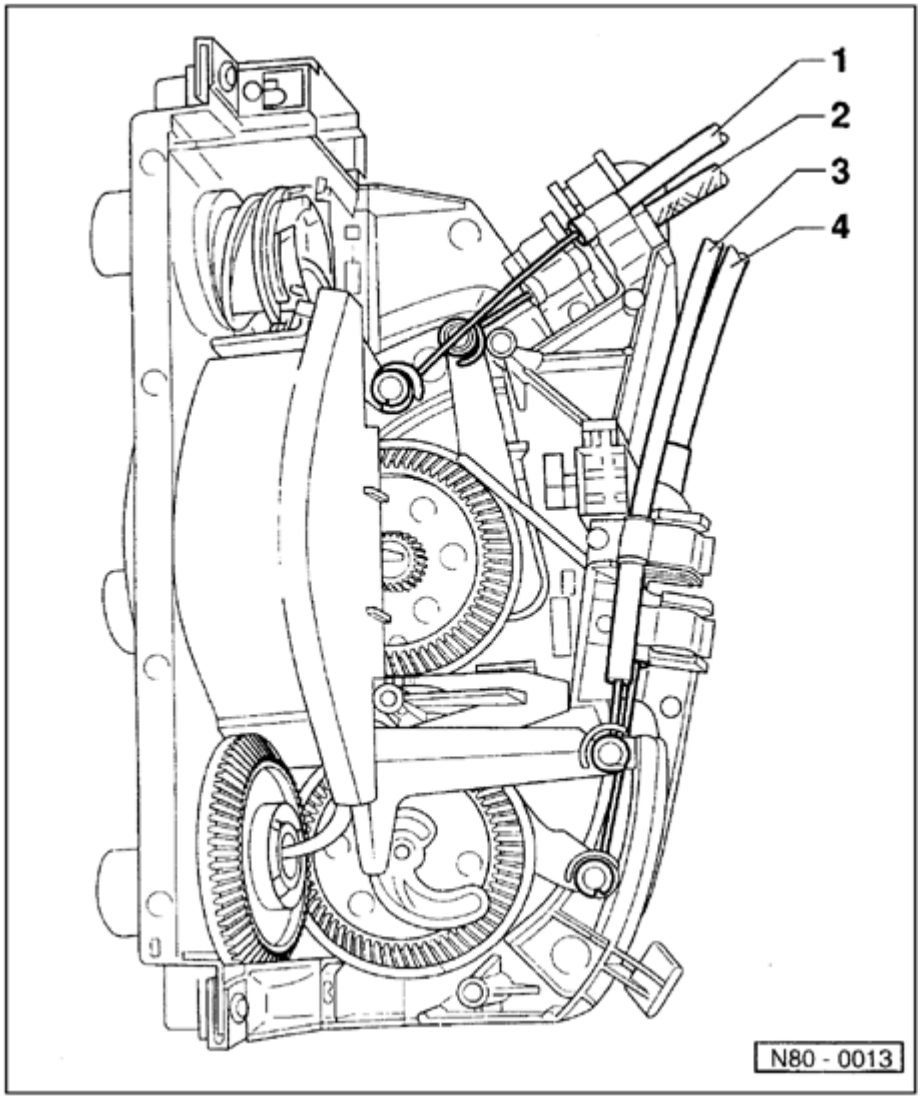

Heating and ventilation cables, installing and adjusting

Notes:

- *Attach cables to removed controls first and then adjust on heater levers and secure.*
- *Ends of sleeves on cables, which are marked with a stripe of paint, must be secured to the controls.*
- *Position sleeves of cables -1-, -2- and -4- at stops on the controls and then secure. Secure sleeve for cable -3- ⇒ Fig. 5 .*
- *With controls installed, adjust cables at flap levers.*
- *When turning control knobs all flaps must be heard to contact the stops.*

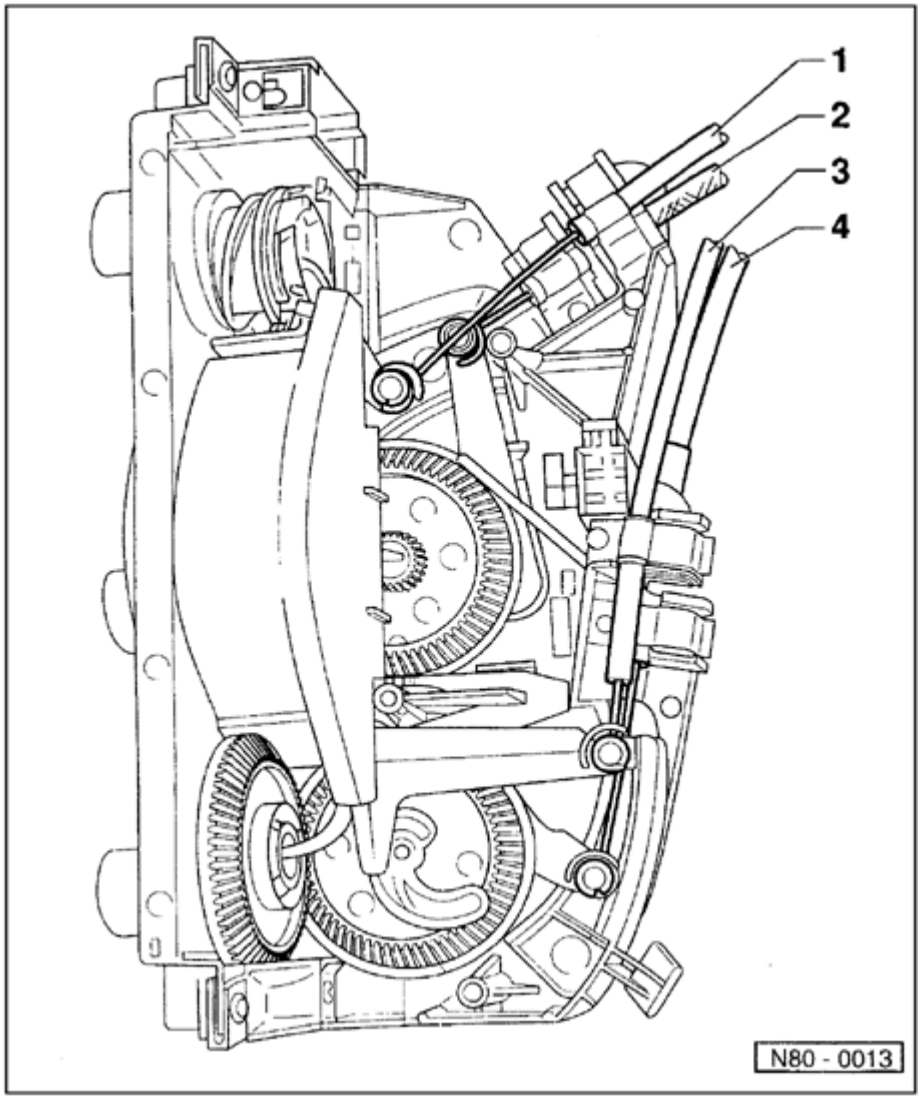

1 - Main shut-off flap cable

- From blower rotary control to main shut-off flap
- Black sleeve, white marking
- Adjusting cable at main shut-off flap ⇒ Fig. 1

2 - Temperature flap cable

- From temperature rotary control to temperature flap
- Blue sleeve, white marking
- Adjusting cable at temperature flap ⇒ Fig. 2

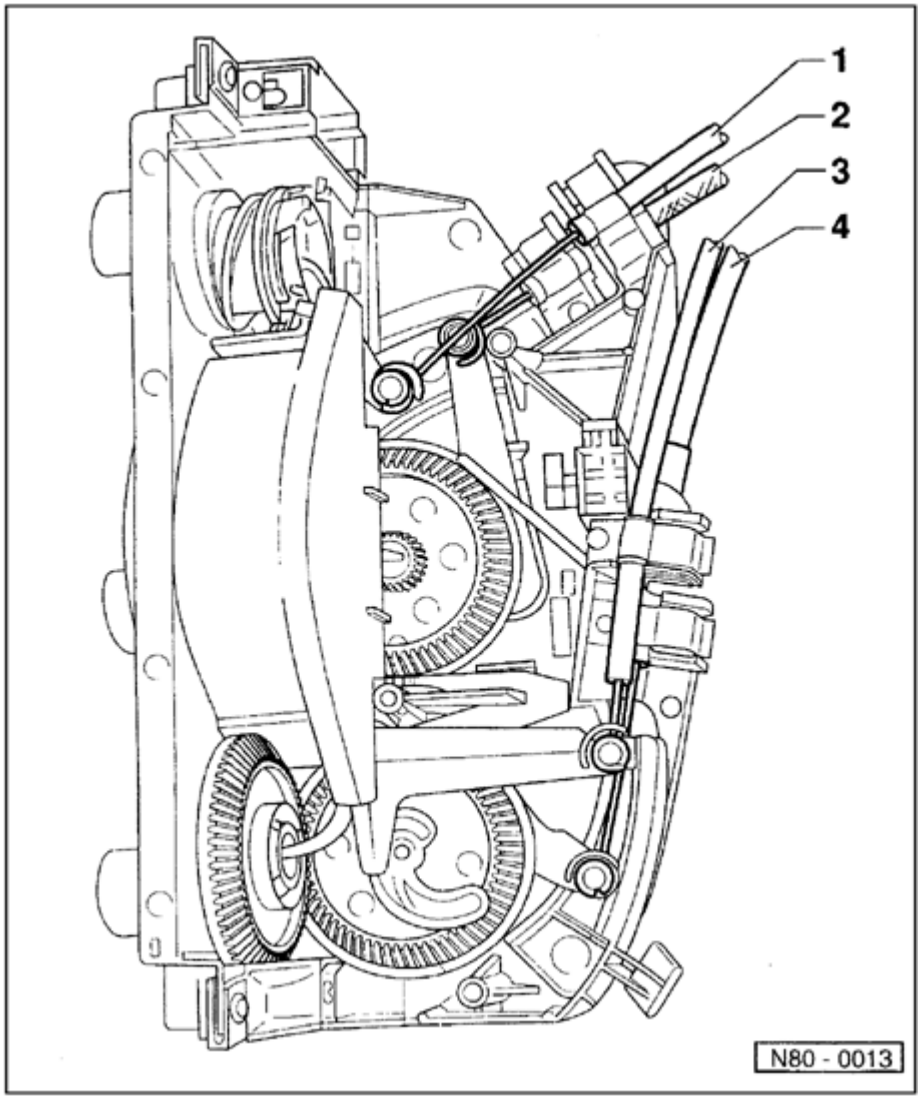

3 - Footwell/defrost flap cable

- From air distribution rotary control to footwell/defrost flap
- Black sleeve, blue marking
- Adjusting cable at footwell/defrost flap ⇒ Fig. 3

4 - Center flap cable

- From air distribution rotary control to center flap
- Black sleeve
- Adjusting cable at center flap ⇒ Fig. 4

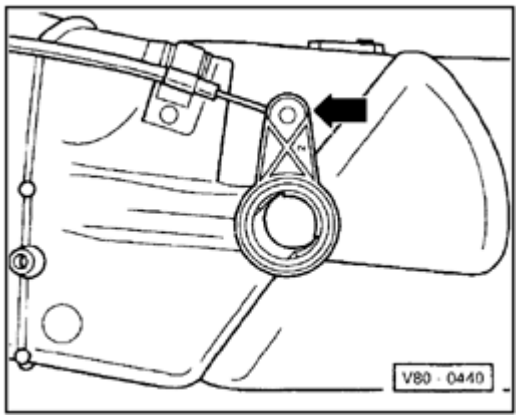

Fig. 1 Main shut-off flap cable, adjusting

- Install heated air and fresh air blower controls.
- Turn blower rotary control onto stop at "0" position.
- Push main shut-off flap lever onto stop (arrow) and secure cable sleeve.

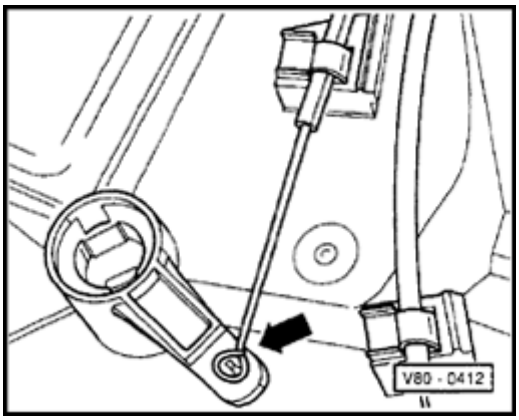

Fig. 2 Temperature flap cable, adjusting

- Install heated air and fresh air blower controls.
- Turn temperature rotary control onto stop at "cold" position.
- Push temperature flap lever onto stop (arrow) and secure blue cable sleeve.

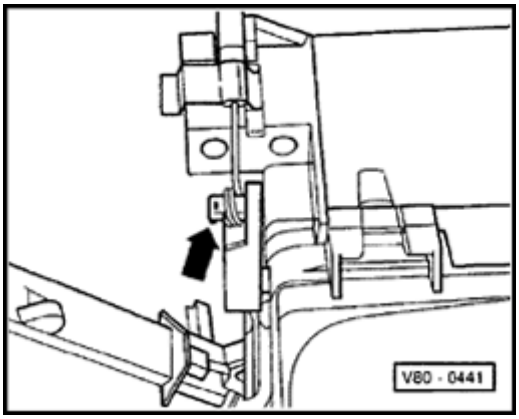

Fig. 3 Footwell/defrost flap cable, adjusting

- Install heated air and fresh air blower controls.
- Turn air distribution rotary control onto stop in defrost position.
- Push footwell/defrost flap lever onto stop -arrow- and secure black cable sleeve.

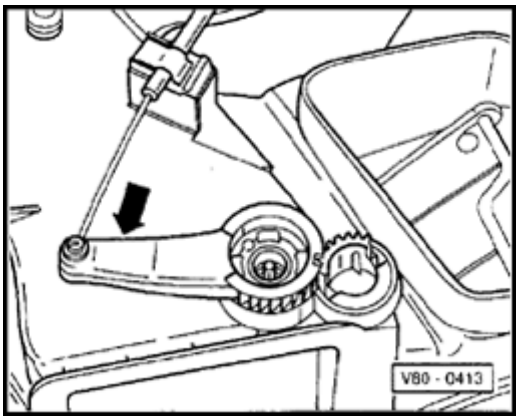

Fig. 4 Center flap cable, adjusting

- Install heated air and fresh air blower controls.
- Turn air distribution rotary control onto stop in defrost position.
- Push center flap lever onto stop -arrow- and secure black cable sleeve.

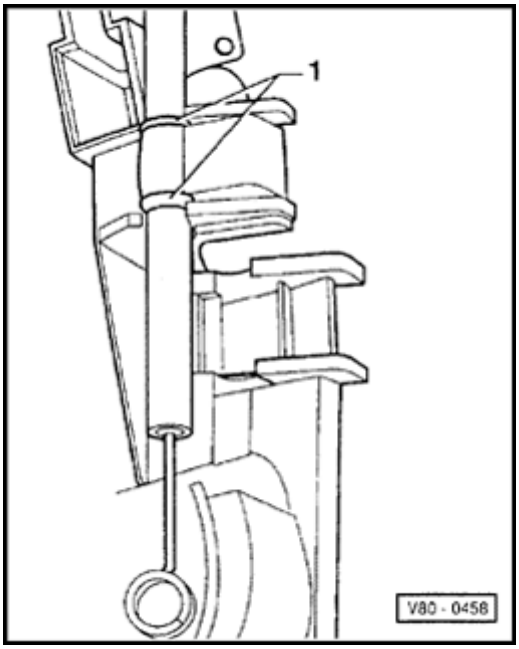

Fig. 5 Footwell/defrost flap cable, securing to control

- Secure cable sleeve at blue marking -1- on control.
- Secure inner cable to upper lever.
- Adjusting cable at footwell/defrost flap ⇒ Fig. 3

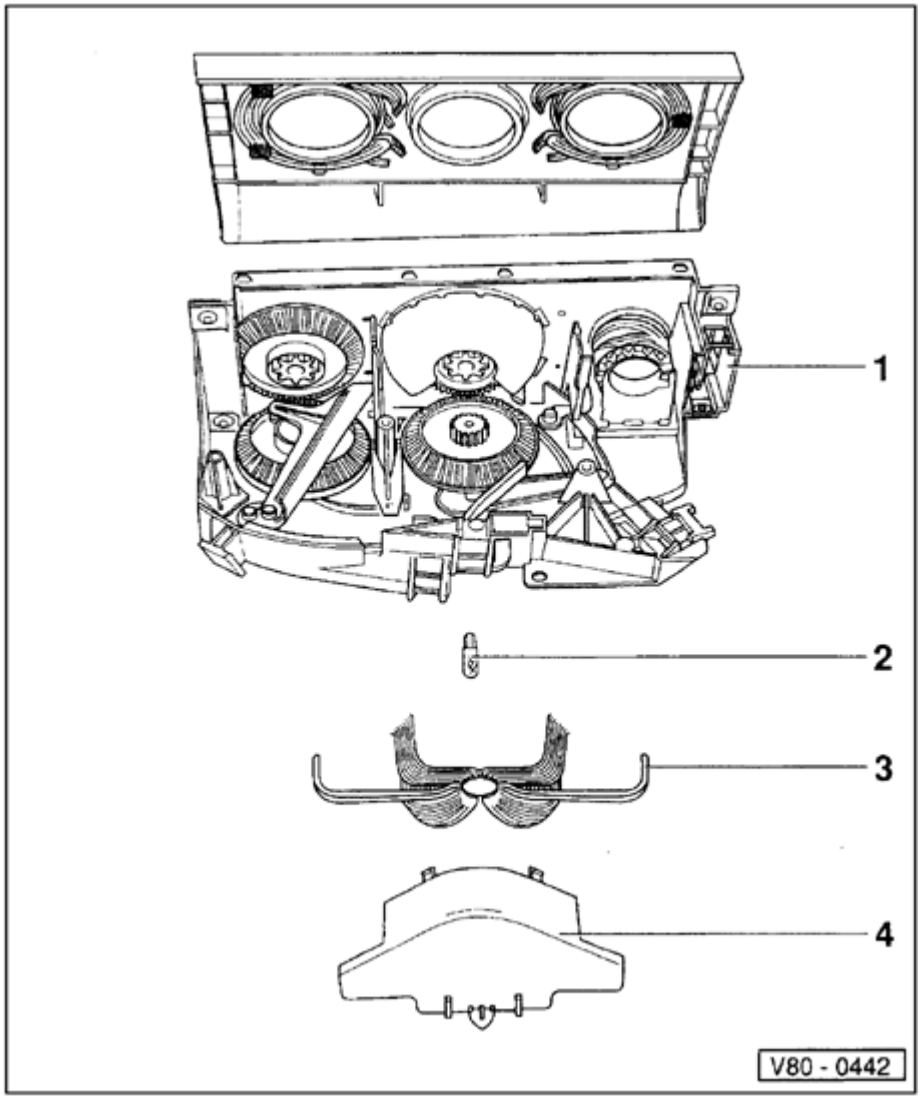

Heating and ventilation controls, assembly

1 - Controls

- Including fresh air blower switch -E9-

2 - Fresh air control light bulb -L16-

3 - Light conductor

4 - Cap

87-1

A/C refrigerant system, notes

Safety measures

The subassemblies and lines of the air conditioner are filled with Tetrafluoroethane also known as refrigerant R-134a.

Refrigerant R-134a replaces refrigerant R-12.

R-134a and R-12 systems are similar in design but there are very important differences in the refrigerant, lubricating oils, service equipment and A/C system components.

A label on the lock carrier in the engine compartment indicates the refrigerant type and capacity.

WARNING!

- ***Always use an Underwriter s Laboratory (UL) approved refrigerant recovery/ recycling/recharging unit such as ent-Moore ACR^4, or equivalent, whenever discharging an R-134a A/C system.***
- ***As of anuary 1, 199 any person who services a motor vehicle air conditioner MUST, by law, be properly trained and certified and use approve refrigerant recycling equipment. Technicians must complete an EPA approved recycling course to be certified.***
- ***State and Provincial governments may have additional requirements regarding air conditioning servicing. Always comply with local laws.***

87-2

WARNING!

A/C system is filled with refrigerant gas which is under pressure.

Always be careful that refrigerant does not come in contact with your skin.

If liquid refrigerant has come in contact with your skin or eyes:

- ***do not rub skin or eyes***
- ***immediately flush with cool water for 15 minutes***
- ***rush to a doctor or hospital***
- ***do not attempt to treat yourself***

Switch on existing exhaust/ventilation systems when working on the refrigerant system.

Work in a well ventilated area because refrigerant gases are heavier than air, displace oxygen and may cause suffocation in areas of poor air circulation, like under the car.

Avoid breathing refrigerant vapors. Exposure may irritate eyes, nose and throat.

Always wear hand and eye protection (gloves and goggles) when working around the A/C refrigerant system.

Do not expose any component of the A/C system to high temperatures (above 0° C/1 ° F) or open flames. Excessive heat will cause a pressure increase which could burst the system.

87-3

WARNING!

- ***eep refrigerant containers stored below 50° C (1 ° F) and never drop from high places. DO NOT warm refrigerant containers with an open flame. If refrigerant needs to be warmed, place bottom of tank in warm water.***

- ***eep refrigerant away from open flames because poisonous gas will be produced if it burns. Do not smoke when refrigerant gases are present for the same reason.***

- ***Electric welding near refrigerant hoses causes R-134a to decompose from ultraviolet light. Discharge system before electric welding.***

- ***Pressuri ed R-134a refrigerant in the presence of oxygen may form a combustible mixture. Never introduce compressed air into any closed R-134a container (full or empty), A/C component or piece of service equipment.***

- ***DO NOT exceed maximum rated capacity of refrigerant containers. Never fill a container to more than 0 of its gross weight rating (for example, 1 lb. in a 30 lb. container.) Without sufficient room for expansion of R-134a (gas cushion), the container could explode when the temperature rises causing serious injury.***

- ***Do not steam clean condensers or evaporators. Use only cold water or compressed air.***

87-4

CAUTION!

- ***R-1 and R-134a refrigerant are NOT compatible. Never add R-1 refrigerant to an R-134a system or R-134a refrigerant to an R-1 system. If the refrigerants are mixed, total system contamination will occur and compressor failure may result.***

- ***Refrigerant oils used for the R-134a system and R-1 system are NOT compatible. Use only the specified synthetic oil (Polyalkylene Glycol/PAG) for the R-134a refrigerant system. DO NOT use R-1 system oil in an R-134a system or R-134a system oil in an R-1 system. If the refrigerant oils are mixed, system contamination will occur and compressor failure may result.***

- ***R-134a refrigerant system oil (PAG oil) absorbs moisture very rapidly. Moisture combines with the refrigerant to form acids which will damage the system. Use only the specified oil from a sealed container and ALWAYS reseal oil container immediately after use. DO NOT use oil if it has become contaminated with moisture or if container has been left open.***

- ***Immediately plug open connections on A/C components to prevent dirt and moisture contamination. Likewise, DO NOT remove new component from packaging until ready to install. Immediately tighten component connections after installation.***

87-5

CAUTION!

- ***Always use separate refrigerant recovery/recycling/recharging servicing equipment for R-1 and R-134a systems. DO NOT use one piece of equipment for both R-1 and R-134a systems. The residual traces of refrigerant will contaminate and damage the equipment. Servicing equipment includes recovery/ recycling/recharging unit, charging station, vacuum pump, manifold gauges, etc.***

- ***DO NOT use R-1 servicing equipment on R-134a systems or R-134a equipment on R-1 systems or damage to both the vehicle A/C system and servicing equipment may result. Use only equipment designed to meet Society of Automotive Engineers (SAE) standards.***

- ***R-134a and R-1 systems use different si e service fittings. NEVER use adaptors to convert an R-1 fitting to R-134a si e or R-134a fitting to R-1 si e.***

- ***R-134a and R-1 A/C components including compressor, hoses, O-rings, evaporator, condenser, receiver-drier, etc. are NOT interchangeable. Components of the R-134a system are identified by lettering R-134a or by a green label (or stripe). In addition, a label on the evaporator housing (below plenum tray) identifies which type of refrigerant is used. Use only the correct system component for each refrigerant type.***

87-6

CAUTION!

- ***Always replace damaged and/or leaking A/C system components. Do not attempt repair by soldering, bra ing or welding.***
- ***Work area must be extremely clean when working on A/C system components.***
- ***Use only tools, equipment and parts specified for use with R-134a.***
- ***Switch on existing exhaust/ventilation systems when working on the refrigerant system.***
- ***Discharge A/C system using refrigerant recovery/ recycling/recharging unit ent-Moore ACR^4, or equivalent, before removing any A/C system component.***
- ***Always replace O-rings, DO NOT reuse. Use only the correct si e and type of O-rings specified for use with R-134a refrigerant. Lubricate O-ring with refrigerant oil before installing.***
- ***Always reinstall cap(s) over A/C service valve(s).***

87-7

A/C refrigerant R-134a, properties

Commercial designation

Obtain R-134a refrigerant from a local A/C supplier under one of the following names:

- R-134a
- Tetrafluoroethane
- CH_2 F CF_3
- H-FKW 134a
- SUVA® TRANS A/C
- ARCTON® 134a

Note

R-134a refrigerant is packaged in different containers. One variation is SUVA® COLD MP used only for commercial applications. This type of R-134a is sold in cylinders using a 1/4 flare fitting which will not connect to the 1/2 -16 ACME fittings used on the vehicle and servicing equipment. Use only R-134a which comes in containers having the correct type of service fitting.

Color

Refrigerant R-134a is colorless and is invisible as a gas. R-134a when viewed through a sight glass (if installed) may appear milky due to the mixture of refrigerant and lubricating oil (PAG oil).

Temperature/pressure relationship

Similar to R-12 refrigerant, R-134a in an enclosed container will have a specific temperature/pressure relationship as follows:

Temperature in °C (°F)	Pressure in bar (psi)
-30 (-22)	0.0 (0.0)
-20 (-4)	0.3 (4.4)
-10 (14)	1.0 (14.5)
0 (32)	1.9 (27.5)
10 (50)	3.1 (45.0)
20 (68)	4.7 (68.2)
30 (86)	6.7 (97.2)
40 (104)	9.1 (132.0)
50 (122)	12.2 (177.0)
60 (140)	15.8 (229.2)
70 (158)	20.2 (293.0)

Refrigerant oil

A special Polyalkylene Glycol (PAG) synthetic oil is used in R-134a systems. This oil is NOT compatible with mineral based oils used in R-12 systems. See safety precautions starting ⇒ Page 87-1 , for Warnings and Cautions regarding proper oil usage.

Airborne properties

Escaped refrigerant gases are heavier than air and will gather first in low places, like under the car. R-134a refrigerant gas displaces oxygen and may cause suffocation in low areas of poor air circulation.

Effects on the environment

Because R-134a does not contain chlorine atoms, the major catalyst in ozone depletion, R-134a has no ozone depletion potential.

R-134a does not cause smog and has a considerably lower global warming potential (greenhouse effect) than R-12 refrigerant. Nonetheless, do not release R-134a into the environment and always recover/recycle using approved service equipment.

Effects on plastics

Refrigerant R-134a will deteriorate some plastics. When system temperature drops, these plastics can be deposited at the expansion valve or restrictor causing blockage. Therefore, when making system repairs, use only genuine Audi replacement parts which are specified for use with R-134a refrigerant.

Effects on metal

In its pure state, refrigerant R-134a is chemically stable and will not attack iron or aluminum. However, the mixture of R-134a and PAG oil may deteriorate certain metals (copper) which could lead to blockage, leaks or deposits on the compressor piston. Therefore, when making system repairs, use only genuine Audi replacement parts which are specified for use with R-134a refrigerant.

Water solubility

Liquid R-134a refrigerant will absorb only very minute quantities of moisture. However, R-134a vapor can absorb large amounts of moisture.

Water in the system forms ice in the expansion valve or restrictor causing the system to stop cooling. In addition, moisture combines with the refrigerant to form acids which will damage the system.

Toxicity

Refrigerant R-134a is non-toxic up to a temperature of 101° C (214° F) and is safe when handled and used properly.

Above 101° C (214° F), gas pressure is above 39.5 bar (573 psi) and R-134a begins to decompose into poisonous gases (hydrogen fluoride, carbonyl fluoride and fluorine). These gases give adequate warning of their presence since they cause irritation of the mucous membrane (throat).

Refrigerant R-134a gas has no effect on foodstuffs; it does not poison food or make it inedible.

Flammability

R-134a refrigerant is not flammable. In fact, it tends to inhibit combustion and has a fire extinguishing effect. However, a flame or glowing hot surface, as well as ultraviolet light (from electric welding), will decompose the refrigerant into poisonous gases (hydrogen fluoride, carbonyl fluoride and fluorine). These gases give adequate warning of their presence since they cause irritation of the mucous membrane (throat).

R-134a can become flammable at pressures above ambient pressure in conjunction with air concentrations greater than 60% by volume.

Refrigerant containers

DO NOT exceed maximum rated capacity of refrigerant containers. Never fill a container to more than 60% of its gross weight rating (for example, 18 lb in a 30 lb container.)

Without sufficient room for expansion of R-134a (gas cushion), the container could explode when the temperature rises causing serious injury.

Leak detection

Use halogen leak detector Hitec HI400A-TEL, or equivalent, to check for R-134a system leaks. This tool can also be used to detect leaks in R-12 systems. Many currently available R-12 leak detectors cannot detect R-134a refrigerant leaks.

87-12

R-134a refrigerant oil

A special Polyalkylene Glycol (PAG) synthetic oil is used in R-134a systems. This oil is NOT compatible with mineral based oils used in R-12 systems.

CAUTION!

- ***Refrigerant oils used for the R-134a system and R-1 system are NOT compatible. Use only the specified synthetic oil for the R-134a refrigerant system. DO NOT use R-1 system oil in an R-134a system or R-134a system oil in an R-1 system. If the refrigerant oils are mixed, system contamination will occur and compressor failure may result.***

- ***R-134a refrigerant system oil (PAG oil) absorbs moisture very rapidly. Moisture combines with the refrigerant to form acids which will damage the system. Use only the specified oil from a sealed container and ALWAYS reseal oil container immediately after use. DO NOT use oil if it has become contaminated with moisture or if container has been left open..***

- ***Do not allow refrigerant oil to come in contact with engine oil or transmission fluid (for example when disposing). Dispose of used PAG refrigerant oil separately following laws governing ha ardous waste disposal.***

87-13

Basics when working on A/C refrigerant system R-134a

CAUTION!

- ***eep work area and all tools clean.***
- ***Use only tools, equipment and parts specified for use with R-134a.***
- ***Always wear protectiveglasses and gloves when working on A/C refrigerant system.***
- ***Switch on existing exhaust/ventilation systems when working on the refrigerant system.***
- ***Discharge A/C system before removing any A/C refrigerant system component.***
- ***Always use an Underwriter s Laboratory (UL) approved refrigerant recovery/ recycling/recharging unit such as ent-Moore ACR[4], or equivalent, whenever discharging an R-134a A/C system.***
- ***Immediately plug openconnections on A/C components to prevent dirt and moisture contamination. Likewise, DO NOT remove new component from packaging until ready to install. Immediately tighten component connections after installation.***

87-14

CAUTION!

- ***Always replace O-rings, DO NOT reuse. Use only the correct si e and type of O-rings specified for use with R-134a refrigerant. Lubricate O-ring with refrigerant oil before installing.***
- ***Use only the specified PAG oil from a sealed container and ALWAYS reseal oil container immediately after use. DO NOT use oil if it has become contaminated with moisture or if oil container has been left open.***
- ***Always reinstall cap(s) over A/C service valve(s).***
- ***DO NOT flush refrigerant system with R-11.***
- ***Evacuate refrigerant system for a minimum of 30 minutes.***
- ***After system recharge, manually rotate A/C compressor approx. 10 turns before starting engine. Start engine with A/C OFF. After idle speed has stabili ed, switch A/C ON and let engine idle (compressor running) for a minimum of two minutes before raising engine speed.***
- ***DO NOT top-off a charged refrigerant system. Instead, discharge, evacuate and recharge system.***

Note:

- *For information on A/C wiring see applicable wiring diagram.*
- *See also A/C refrigerant system safety precautions starting ⇒ Page 87-1 .*
- *Green label in engine compartment indicates A/C system is charged with refrigerant R-134a.*
- *Only a high pressure service valve is used for A/C system servicing. A low pressure service valve is not installed in the A/C system. Perform all A/C system service operations (i.e. discharging, evacuating, recharging) through the high pressure service valve only.*

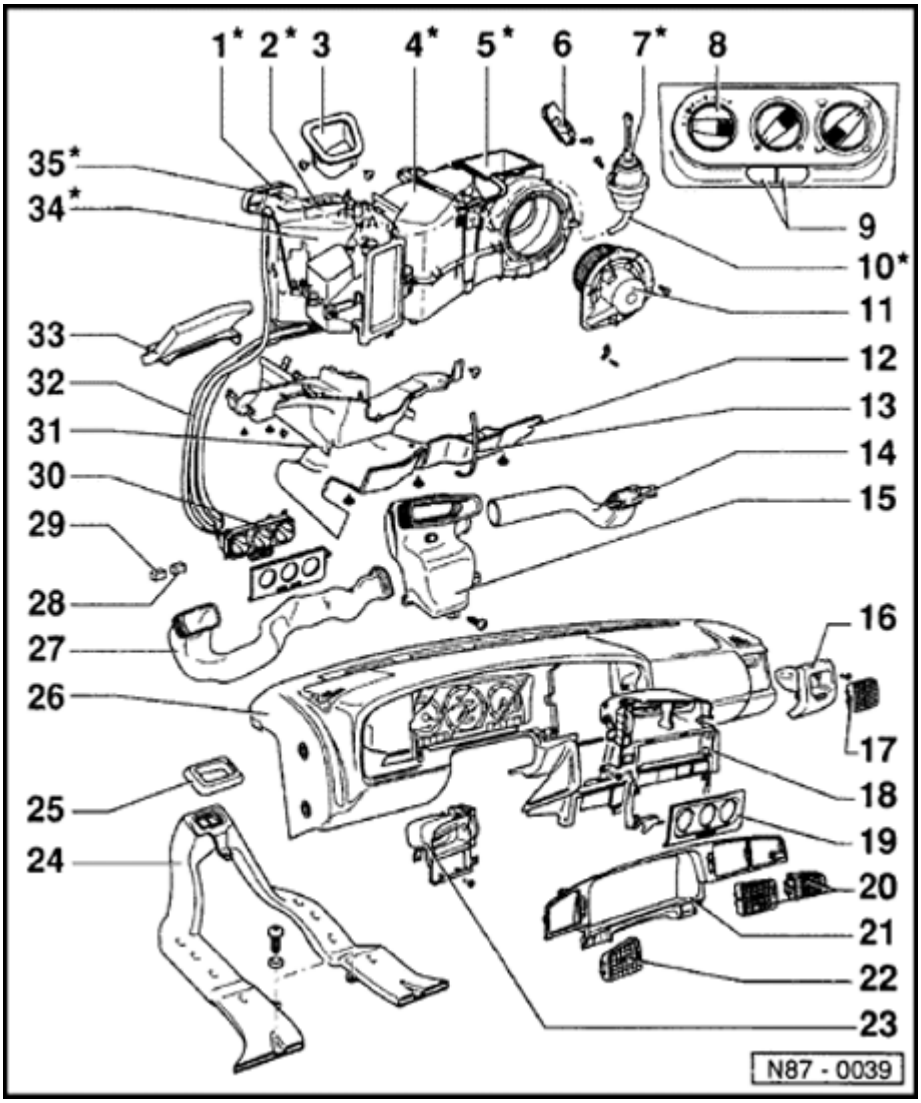

Manual A/C

Heating and A/C components in passenger compartment, servicing

CAUTION!

- ***Obtain the anti-theft radio security code.***
- ***Switch the ignition off.***
- ***Disconnect the battery Ground (GND) strap.***
- ***After reconnecting battery, re-code and check operation of anti-theft radio. Also check operation of clock and power windows according to Repair Manual and/or Owner s Manual.***

Note:

*System components identified with an * must only be serviced or replaced after discharging refrigerant system. Use ent Moore ACR4 or equivalent.*

1 - Gasket*

- Always replace

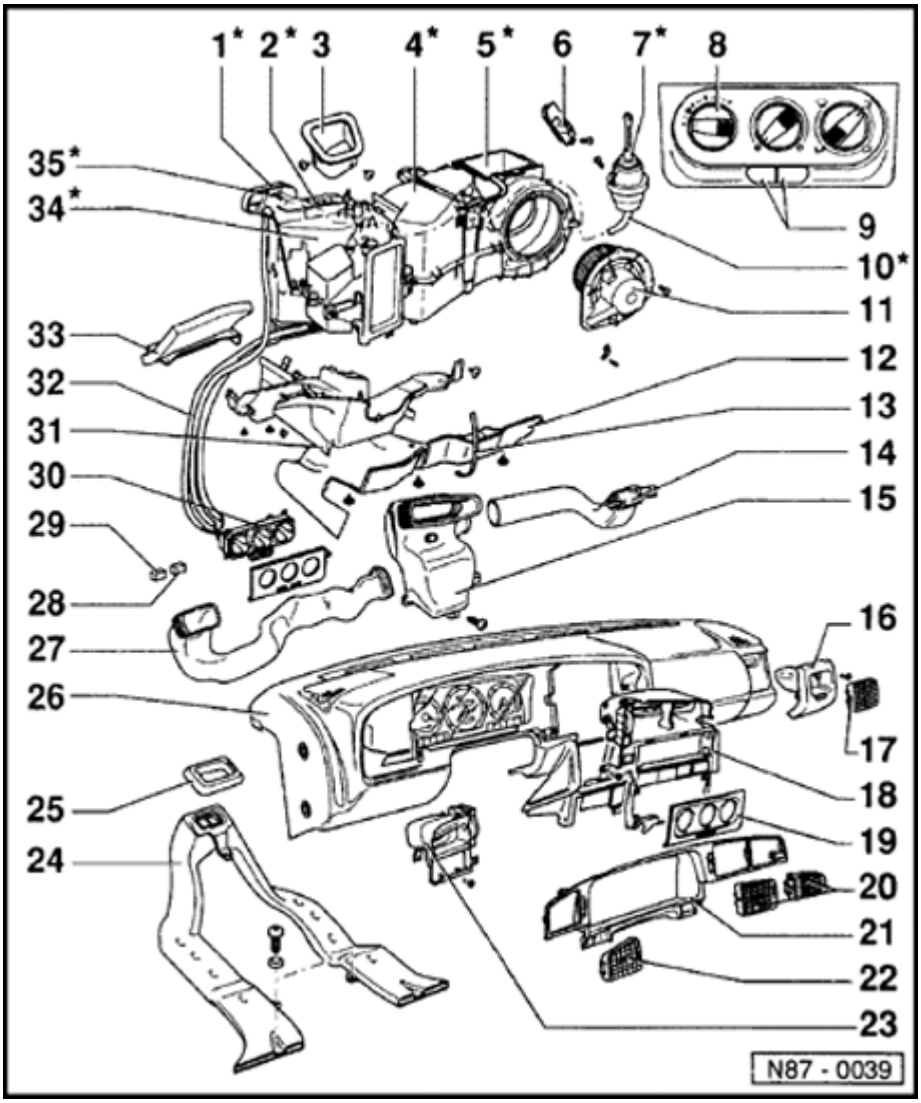

2 - Heater core*

- Gaskets must be bonded gap-free all around.
- If retaining tabs do not engage when assembling, secure heat exchanger with screws.
- Always replace coolant after replacement.
- Removing ⇒ Page 87-84 (Heating and A/C unit, assembly)

3 - Connecting duct

- With gasket
- Replacing - remove instrument panel beforehand

4 - Heating and A/C unit*

Contains:

- Heater core
- Evaporator
- Assembly ⇒ Page 87-84 .

5 - Air intake*

- With fresh/recirculating air flap

6 - Fresh air blower series resistance with fuse - N24-

- Replacing ⇒ Fig. 2

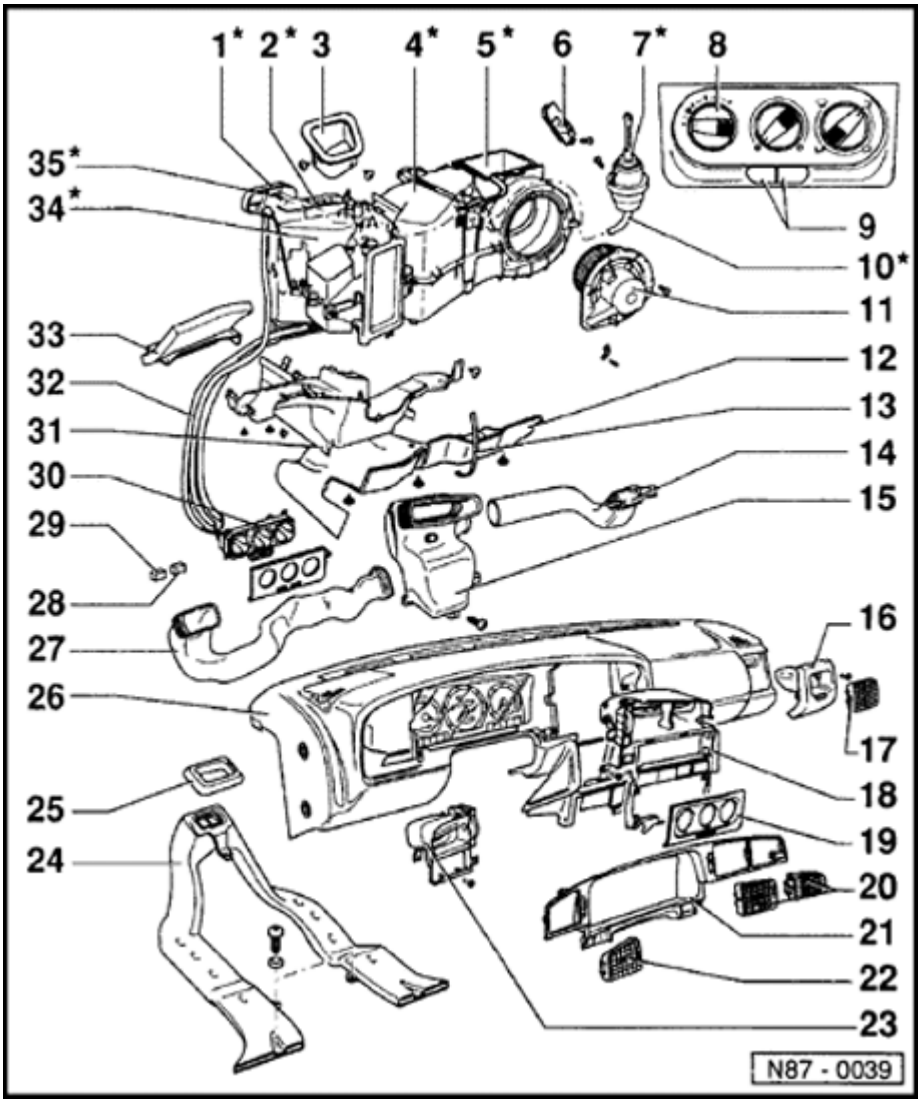

7 - Vacuum unit for fresh/recirculating air flap*

- Ventilated: Fresh air operation

8 - Fresh air blower switch -E9-

9 - A/C switch -E35-

- With switch for fresh/recirculating air flap -E159-
- With control light for lighting - Air conditioner switch - L43-
- Removing ⇒ Fig. 1

10 - Vacuum line*

- Vacuum hose connection diagram ⇒ Page 87-40

11 - Fresh air blower -V2-

- Removal and installation ⇒ Fig. 3

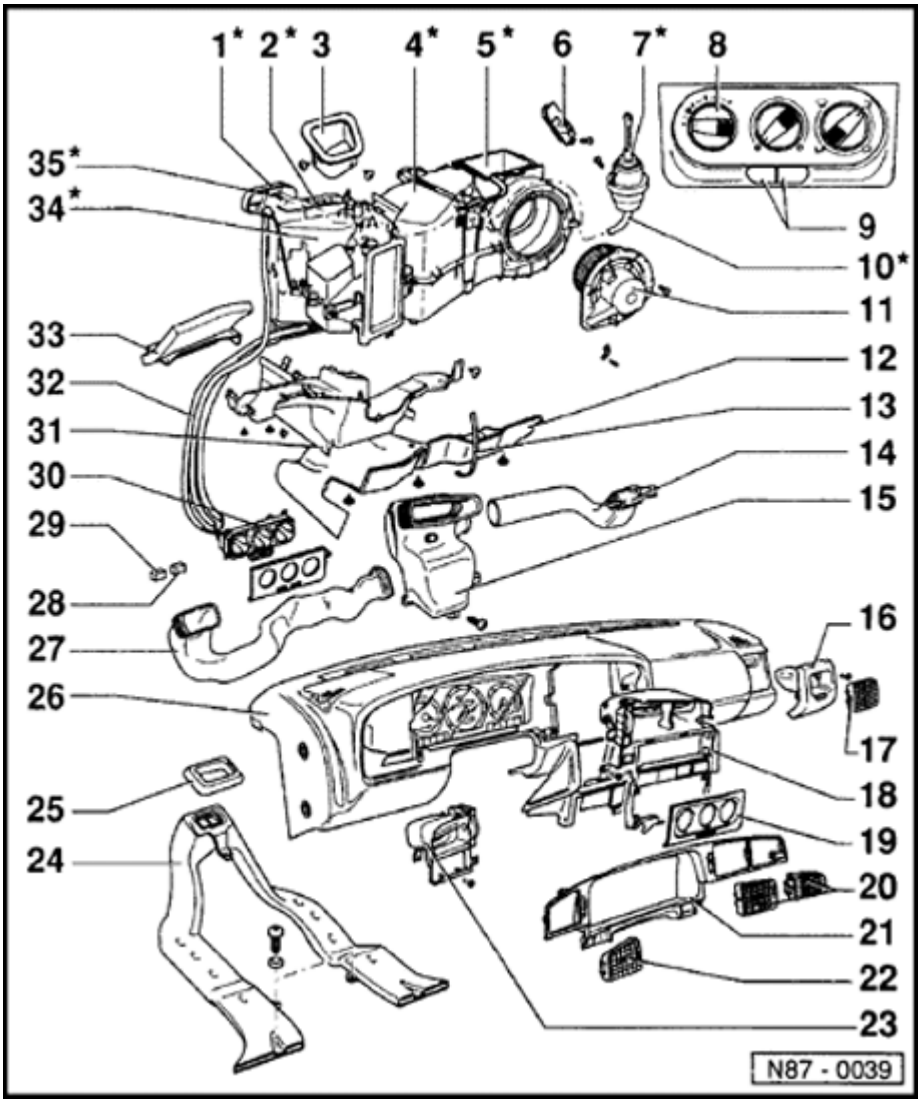

12 - Evaporator housing cover

- Replacing: First remove instrument panel and footwell outlets - 31 -

13 - Retaining strap

- Replacing: First remove instrument panel and footwell outlets - 31 -

14 - Right air duct

15 - Air distributor

- Replacing: Remove center console, instrument panel bracket, center vent -13-, heating and fresh air controls -30-, remove shelf on passenger side; loosen instrument panel -26- and lift

16 - Right air outlet

- Removing ⇒ Page 80-1 , ⇒ Fig. 8

87-20

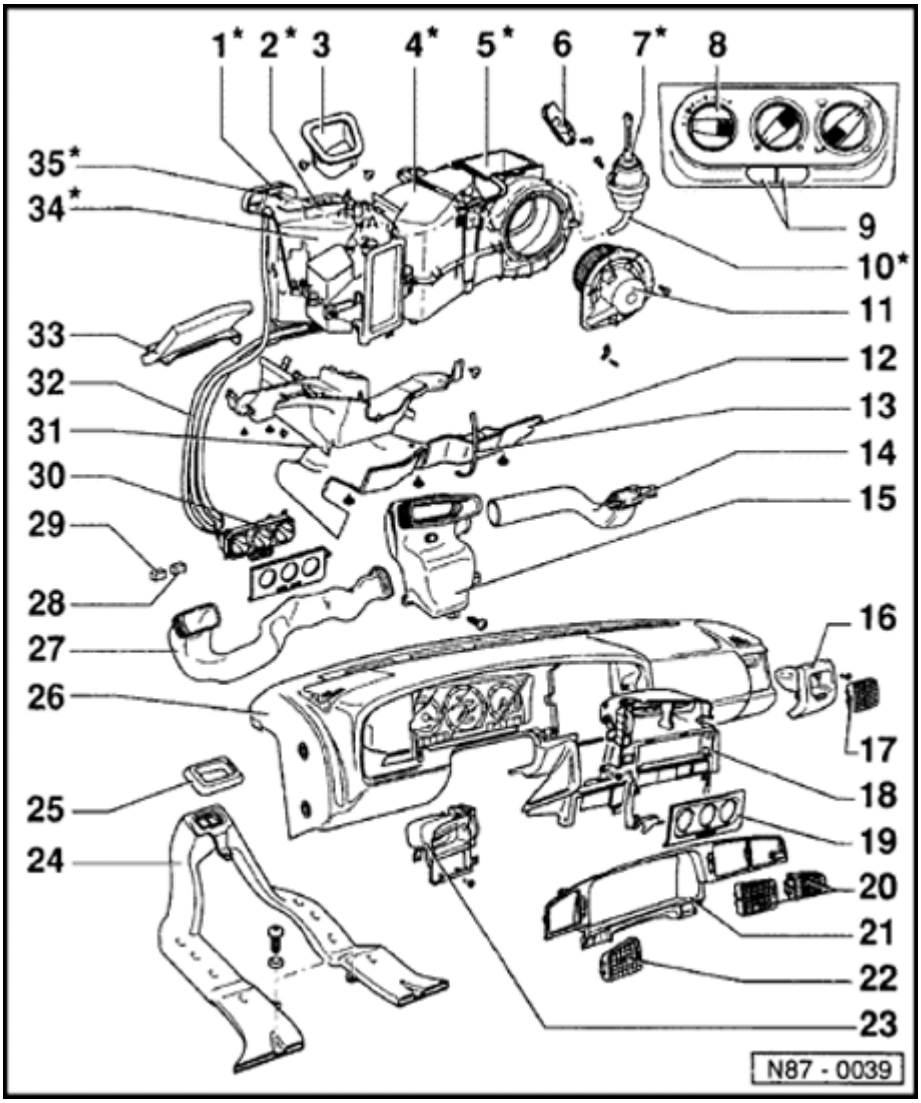

17 - Grille

- For right vent

18 - Center air outlet

- Removing ⇒ Page 80-1 , ⇒ Fig. 7

19 - Control panel trim

20 - Grilles

- For center vent

21 - Instrument panel trim

- Removing ⇒ Page 80-1 , ⇒ Fig. 4

22 - Grille

- For right vent

23 - Left air outlet

- Removing ⇒ Page 80-1 , ⇒ Fig. 6

87-21

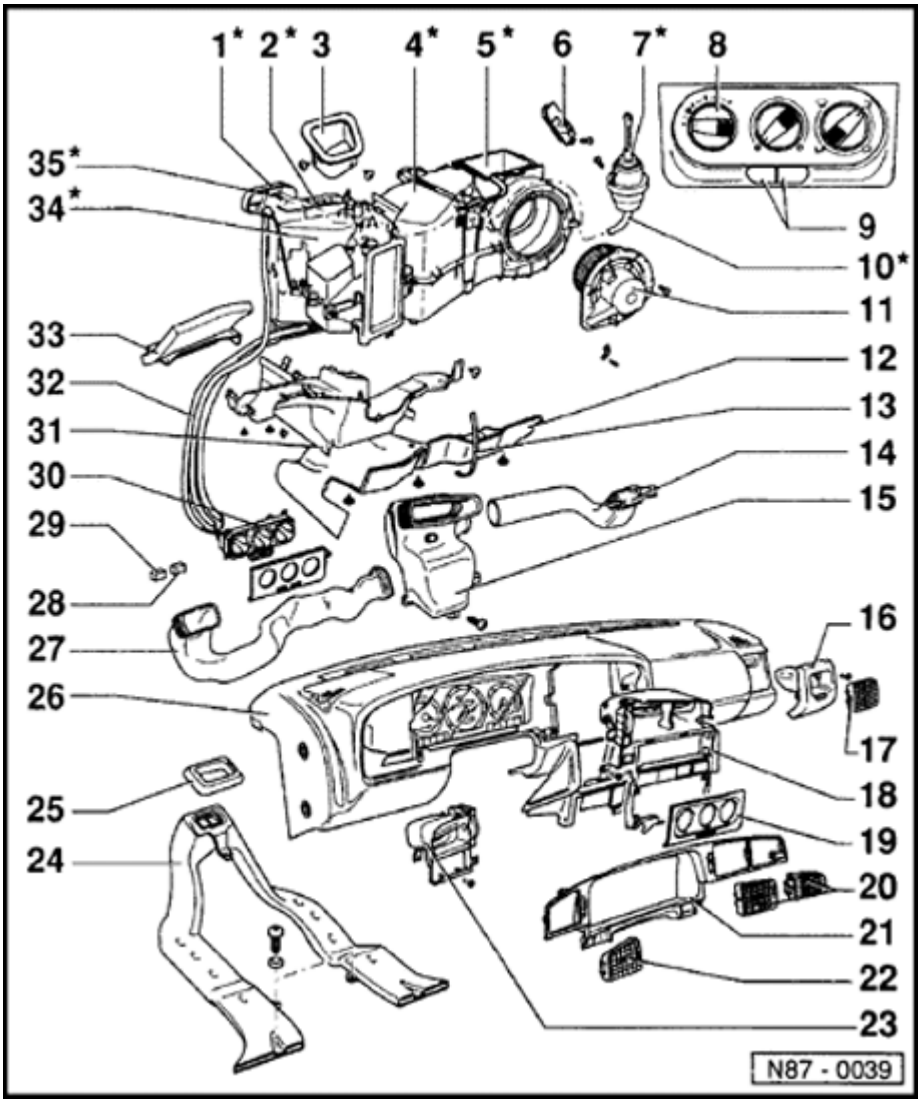

24 - Rear heater duct

- Replacing: First remove center console, instrument panel bracket, pedal cluster cover - 33 -, footwell outlet - 31 -, seats and carpet

25 - Gasket

26 - Instrument panel

- Removing and installing

⇒ *Repair Manual, Body Exterior, Interior, Repair Group 70 Removing and installing instrument panel*

27 - Left air duct

28 - A/C cut-off control module - 314-

- Only on vehicles with Diesel engine and manual transmission
- Behind the center console
- Control number 129

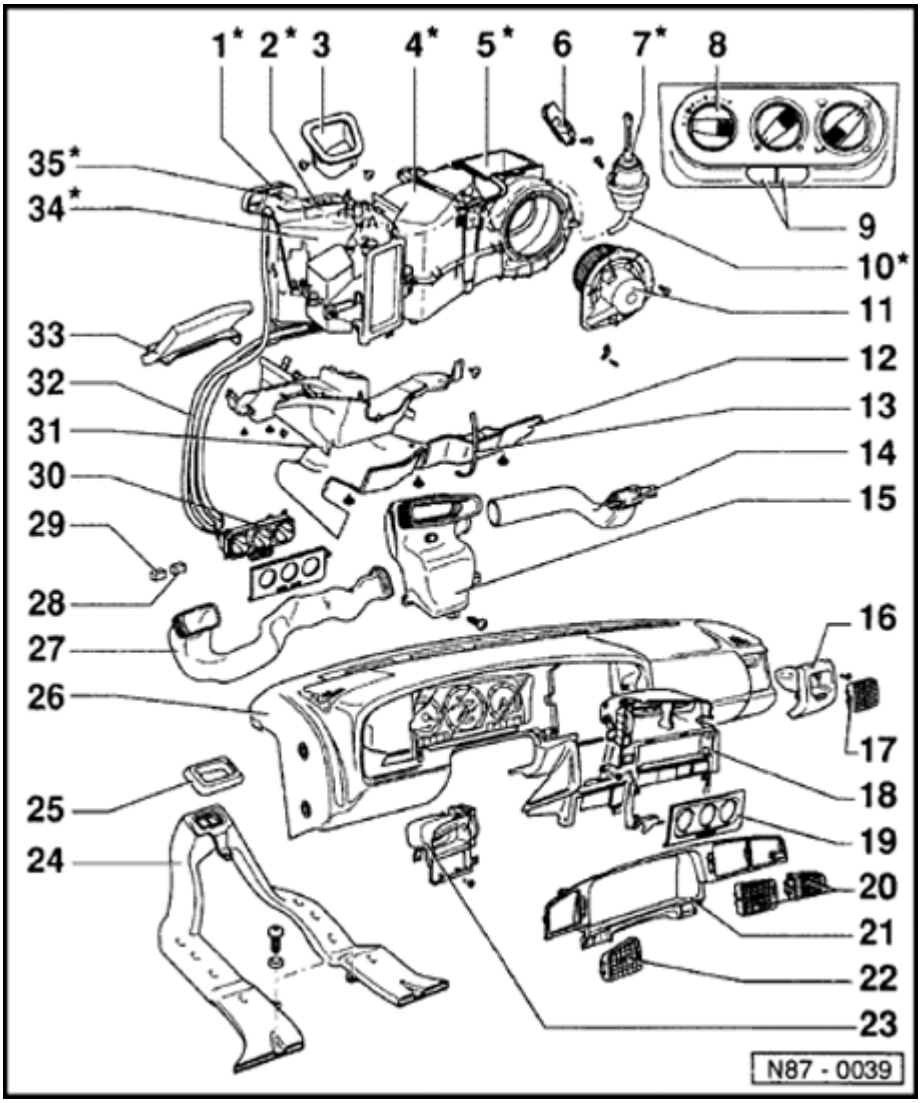

29 - A/C clutch cut-off relay - 246-

- Only on vehicles with automatic transmission
- Behind the center console
- Control number 135

30 - Heating and A/C controls

- With A/C switch -E35-
- Installing and adjusting cables ⇒ Page 87-26
- Removing and installing ⇒ Page 80-1 , ⇒ Fig. 3
- Disassembling and assembling ⇒ Page 80-21

31 - Footwell outlet

- Replacing: Remove shelf on drivers side and passenger side, center console, instrument panel bracket and pedal cluster cover -33-

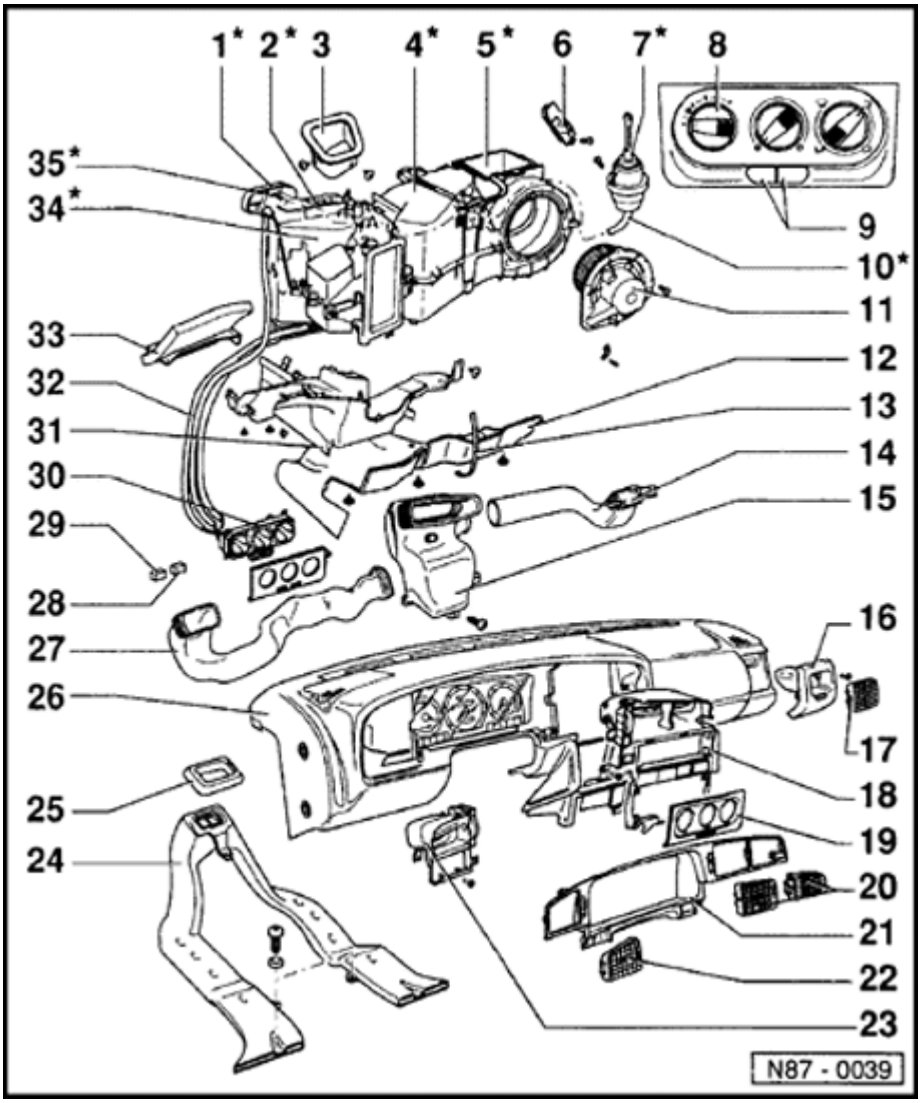

32 - Heating and A/C cables

- Replacing: First remove pedal cluster cover - 33 - and footwell outlet - 31 -
- Installing and adjusting ⇒ Page 87-26

33 - Pedal cluster cover

34 - Air distribution housing*

- With temperature flap
- With center flap
- With footwell/defrost flap
- Do not disassemble further

35 - Vacuum line connection*

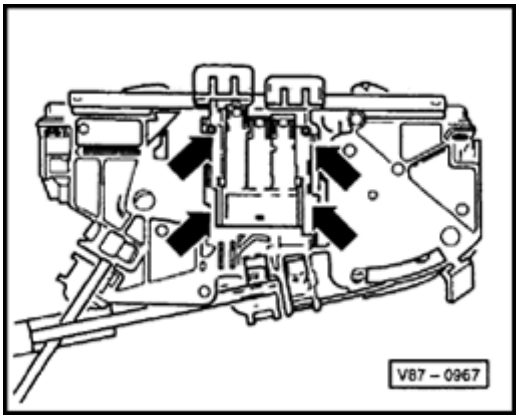

Fig. 1 A/C switch -E35-, removing

Press the switch unit (at the four locating points) against the controls and at the same time toward the buttons.

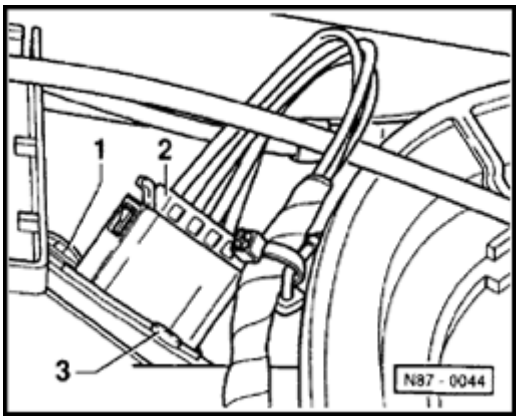

Fig. 2 Fresh air blower series resistance with fuse -N24-, replacing

- Remove shelf on passenger side
- Remove glove box.
- Pull off connector -2- and remove screws -3-.
- Seal surface between series resistor -1- and air duct before installing with AMV 176 000 05.

87-25

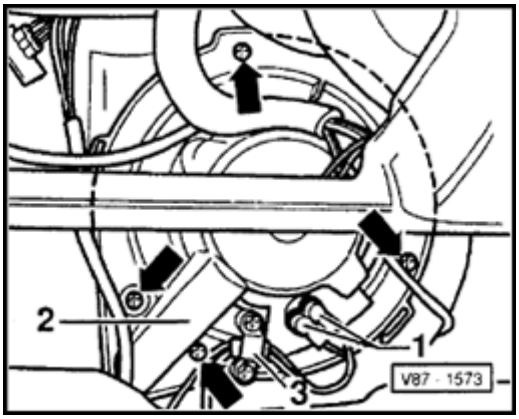

Fig. 3 Fresh air blower -V2-, removing and installing

- Remove right side shelf.
- Remove glove box.
- Disconnect electrical connection -1-.
- Remove clamp -3-.
- Remove screws -arrows- and remove fresh air blower -2- downward.

87-26

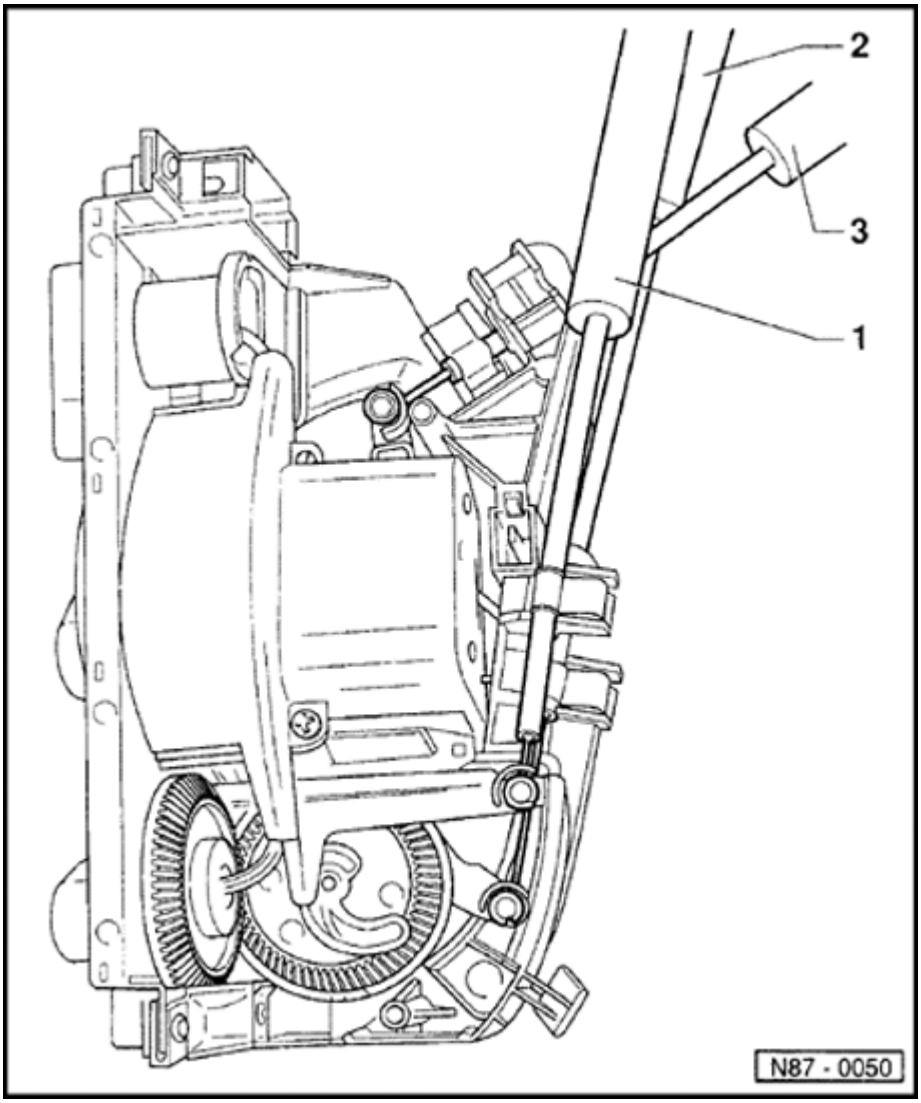

Heating and A/C cables, installing and adjusting

Notes:

- *First connect cables to removed controls then adjust and secure cables to levers on air conditioner.*
- *Sleeve ends of cables which are marked with a colored line are attached to the controls.*
- *Position cable sleeves -2- and -3- at stops on the controls and then secure. Secure sleeve for cable -1- ⇒ Fig. 4 .*
- *Adjust cables at flap levers with the controls installed.*
- *All flaps must audibly contact stop when controls are turned.*

87-27

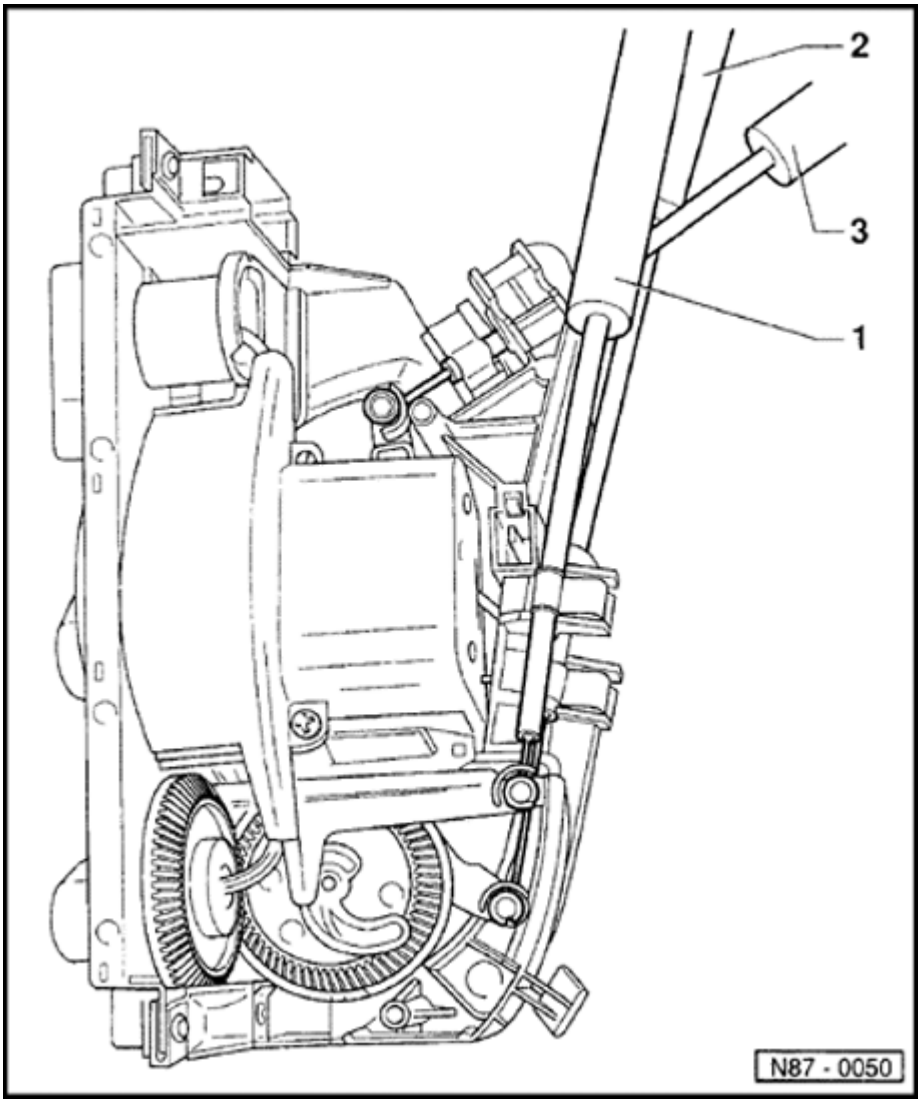

1 - Footwell/defrost flap cable

- From air distribution rotary control knob to footwell/defrost flap
- Black sleeve
- Adjusting cable at footwell/defrost flap ⇒ Fig. 1

2 - Cable for center flap

- From air distribution rotary control knob to center flap
- Black sleeve
- Adjusting cable at central flap ⇒ Fig. 2

3 - Temperature control flap cable

- From temperature rotary control knob to temperature control flap
- Blue sleeve
- Adjusting cable at temperature control flap ⇒ Fig. 3

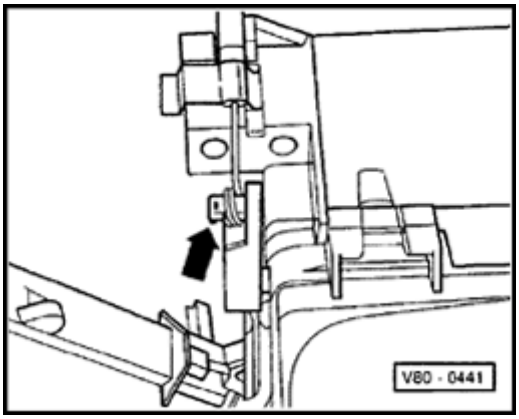

Fig. 1 Footwell/defrost flap cable, adjusting

- Install warm and fresh air controls.
- Turn air distribution rotary control knob to stop at "defrost" position.
- Press footwell/defrost flap lever onto stop -arrow- and secure black cable sleeve.

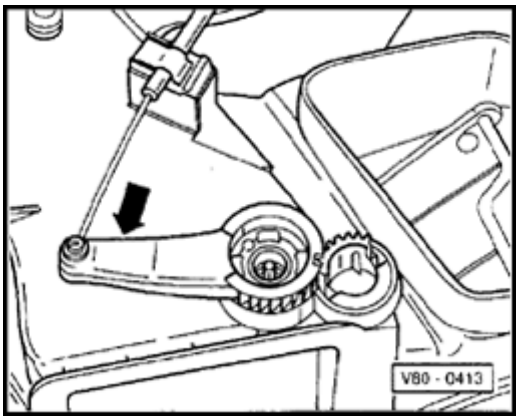

Fig. 2 Center flap cable, adjusting

- Install warm and fresh air blower controls.
- Turn air distribution rotary control knob onto stop at "defrost" position.
- Press center flap lever onto stop -arrow- and secure black sleeve.

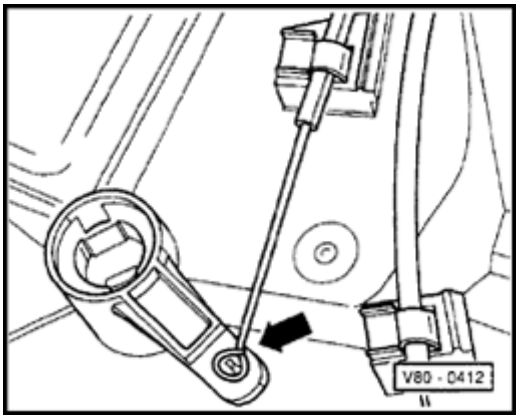

Fig. 3 Temperature flap cable, adjusting

- Install warm and fresh air blower controls.
- Turn temperature rotary control knob to stop at "cold" position.
- Press temperature flap lever onto stop -arrow- and secure blue cable sleeve.

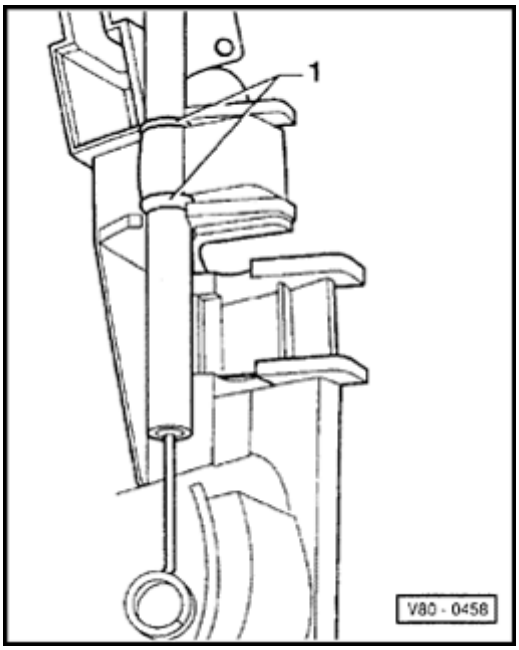

Fig. 4 Footwell/defrost flap cable to control, securing

- Secure cable sleeve at blue marking -1- on control.
- Secure inner cable to upper lever.
- Adjusting cable on footwell/defrost flap ⇒ Fig. 1

87-30

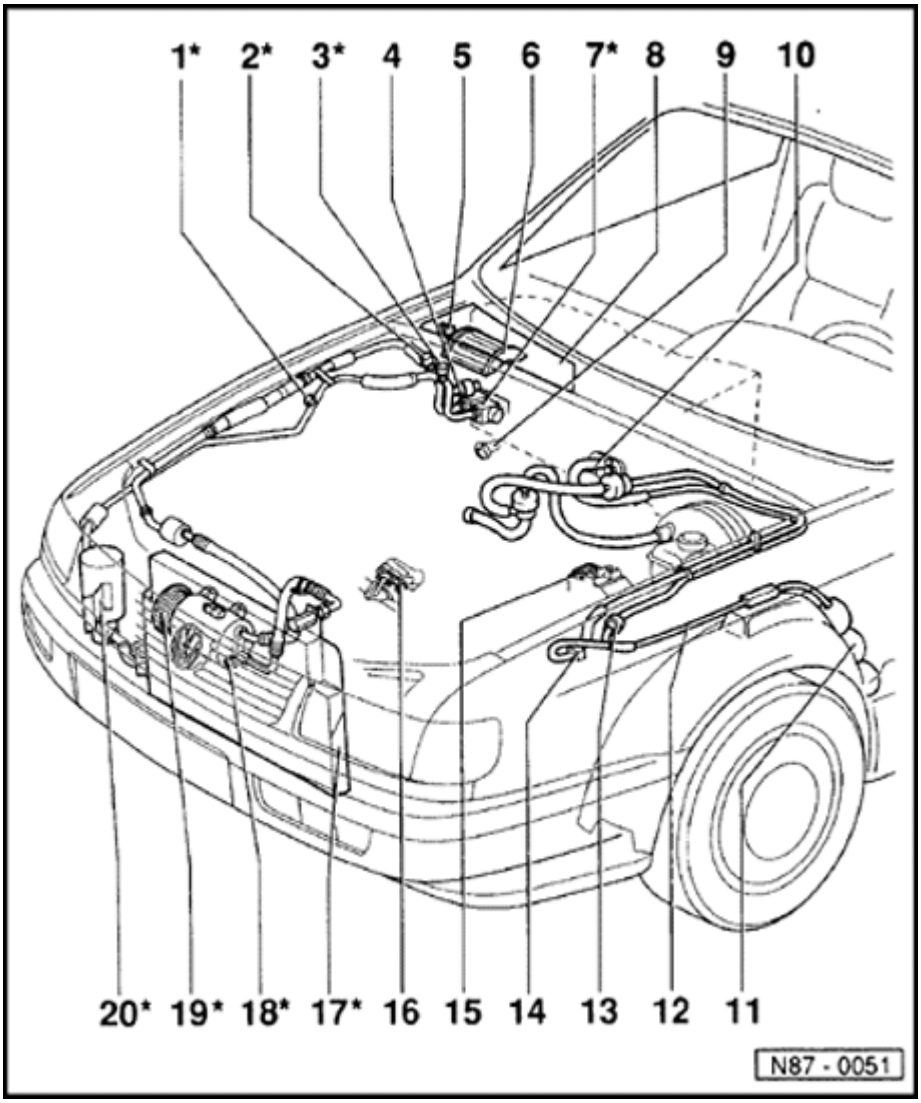

Heating and A/C components in engine compartment, servicing

CAUTION!

- ***Obtain the anti-theft radio security code.***
- ***Switch the ignition off.***
- ***Disconnect the battery Ground (GND) strap.***
- ***After reconnecting battery, re-code and check operation of anti-theft radio. Also check operation of clock and power windows according to Repair Manual and/or Owner s Manual.***

Note:

*System components identified with an * must only be serviced or replaced after discharging refrigerant system. Use ent Moore ACR4 or equivalent.*

1 - Sight glass*

2 - Low pressure service valve*

3 - High pressure service valve*

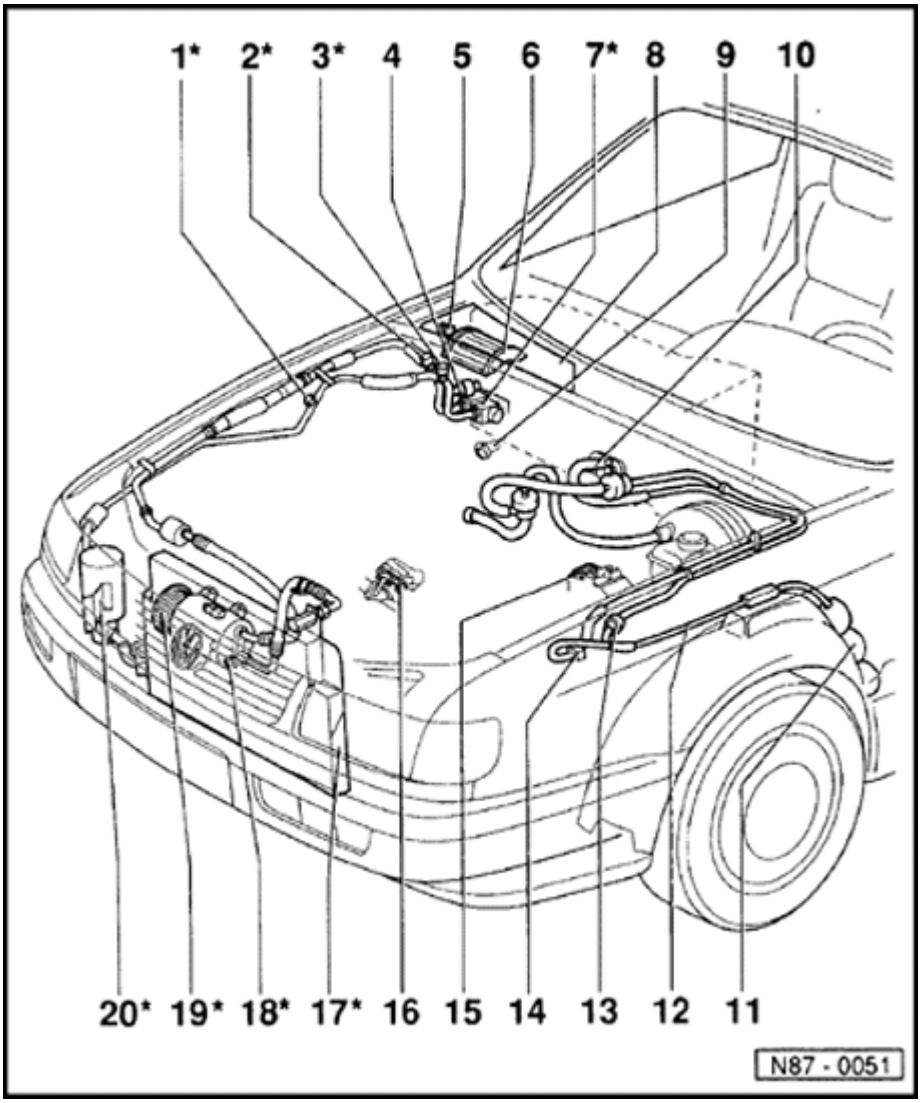

4 - A/C pressure switch - F129-

- Testing ⇒ Fig. 2
- Removing and installing:
  - Tightening torque 8 Nm (70 in lb)
  - Replace O ring seal (note Part No.).

5 - Ambient temperature switch -F38-

- Switches off A/C clutch -N25- at low ambient temperature (off at -1 °C -34 °f-, on at +7 °C -45 °f).
- Removing and installing ⇒ Fig. 4

6 - Dust and pollen filter

- Removing ⇒ Page 80-1 , ⇒ Fig. 5

7 - Expansion valve*

- Opening must be sealed sufficiently to stop water ingress
- Checking insulation piece for expansion valve ⇒ Fig. 6
- Removing ⇒ Page 87-79 .

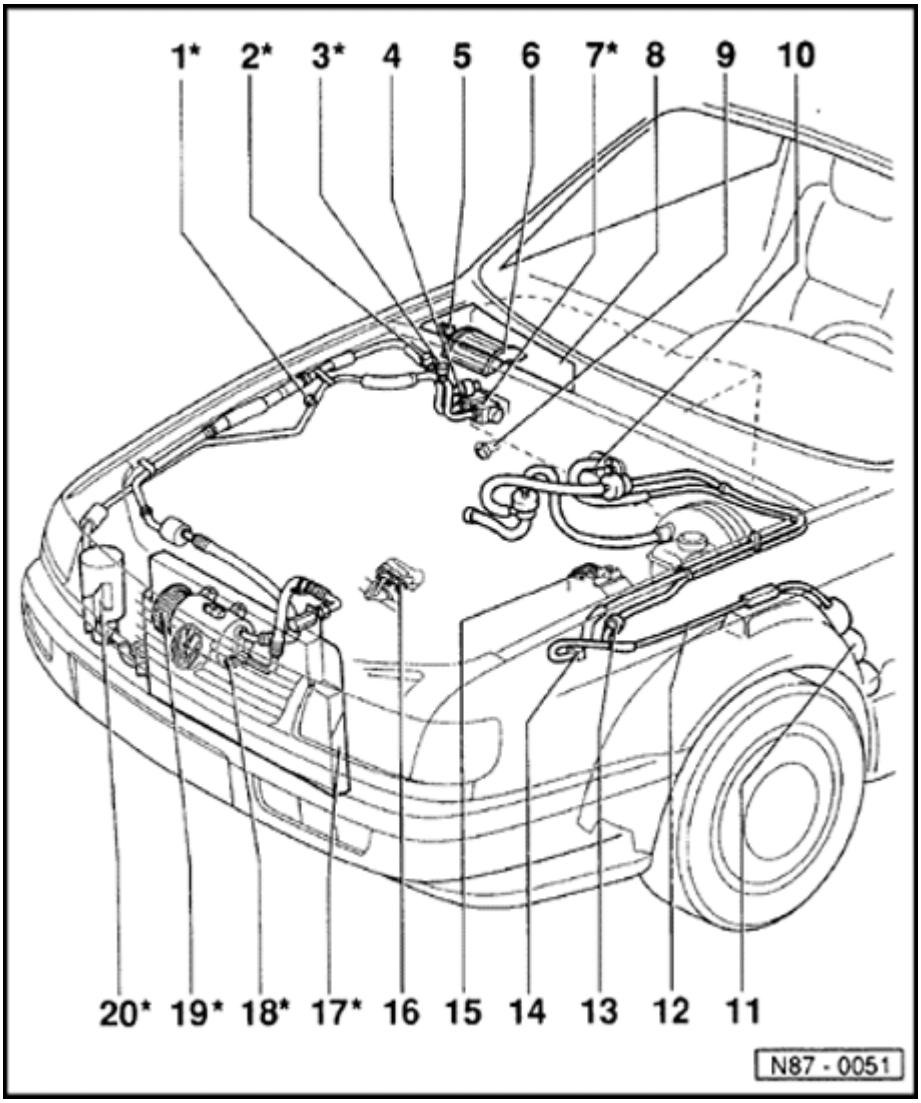

8 - Plenum chamber cover

9 - Evaporator water drain valve

- Behind bulkhead insulation
- Removing and installing ⇒ Fig. 3
- Valve mating surfaces must be clean and dry

10 - Heat exchanger and vacuum hose guide

11 - Vacuum reservoir

- Insertion depth for vacuum hose: 30 mm
- Removing and installing ⇒ Fig. 7

12 - Vacuum hose

- Vacuum hose connection diagram ⇒ Page 87-40

13 - Non-return valve

Direction of suction indicated by arrow

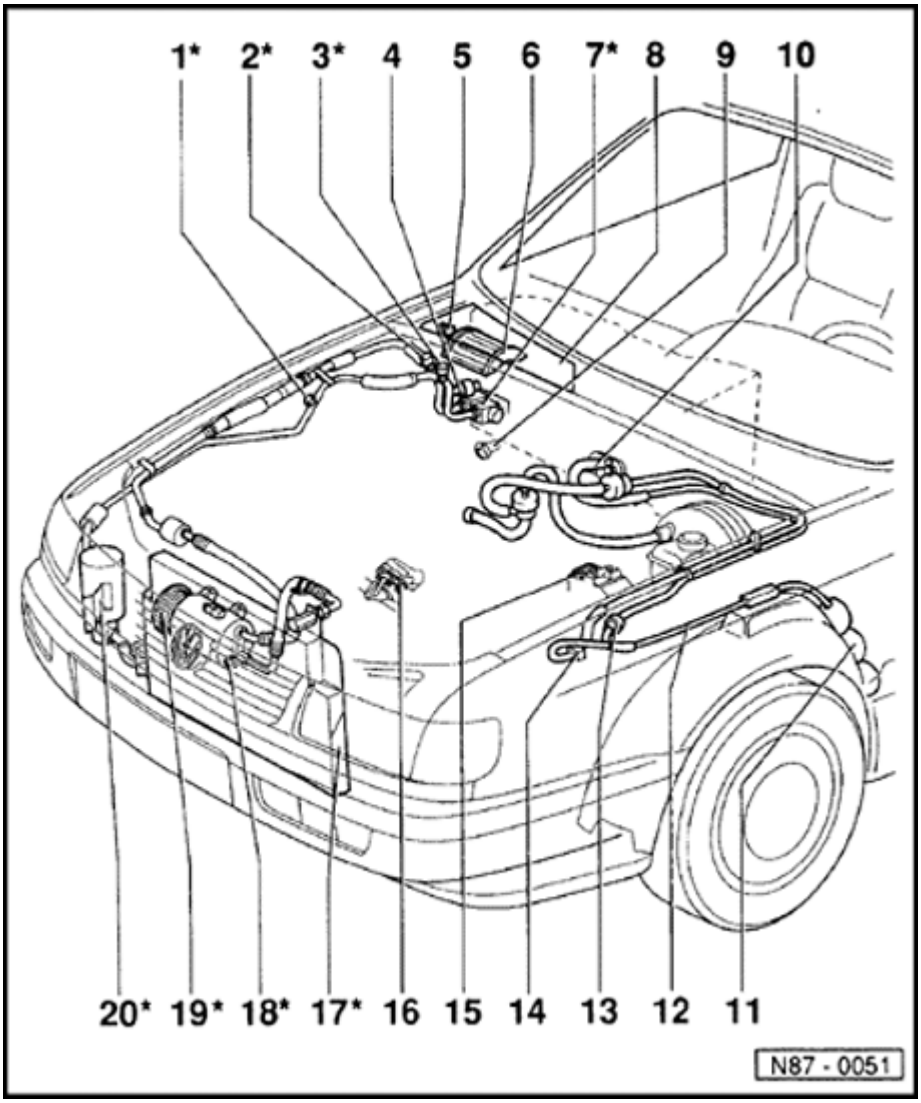

14 - Fresh air/recirculating flap two-way valve - N63-

- Open when electrically completed
- Vacuum hose connection diagram ⇒ Page 87-40
- Installing ⇒ Fig. 5

15 - Coolant FC (Fan Control) Control Module - 293-

16 - A/C cut-out thermal switch -F163- and third speed coolant fan control (FC) thermal switch-F165-

- -F163- only on vehicles with engine codes AAA, AAZ or ABF
- -F165- only on vehicles with 3-speed fan motor
- -F165- switches coolant fan: into 3rd speed as temperature increases (on at 112 ° C -234 ° f-, off at 108 ° C -227 ° f-).
- -F163- switches off A/C clutch -N25- at excessively high coolant temperature off at (119 ° C -245 ° f-, on at 112 ° C -232 ° f-).
- Removing and installing on vehicles with engine code AAA ⇒ Fig. 1

87-34

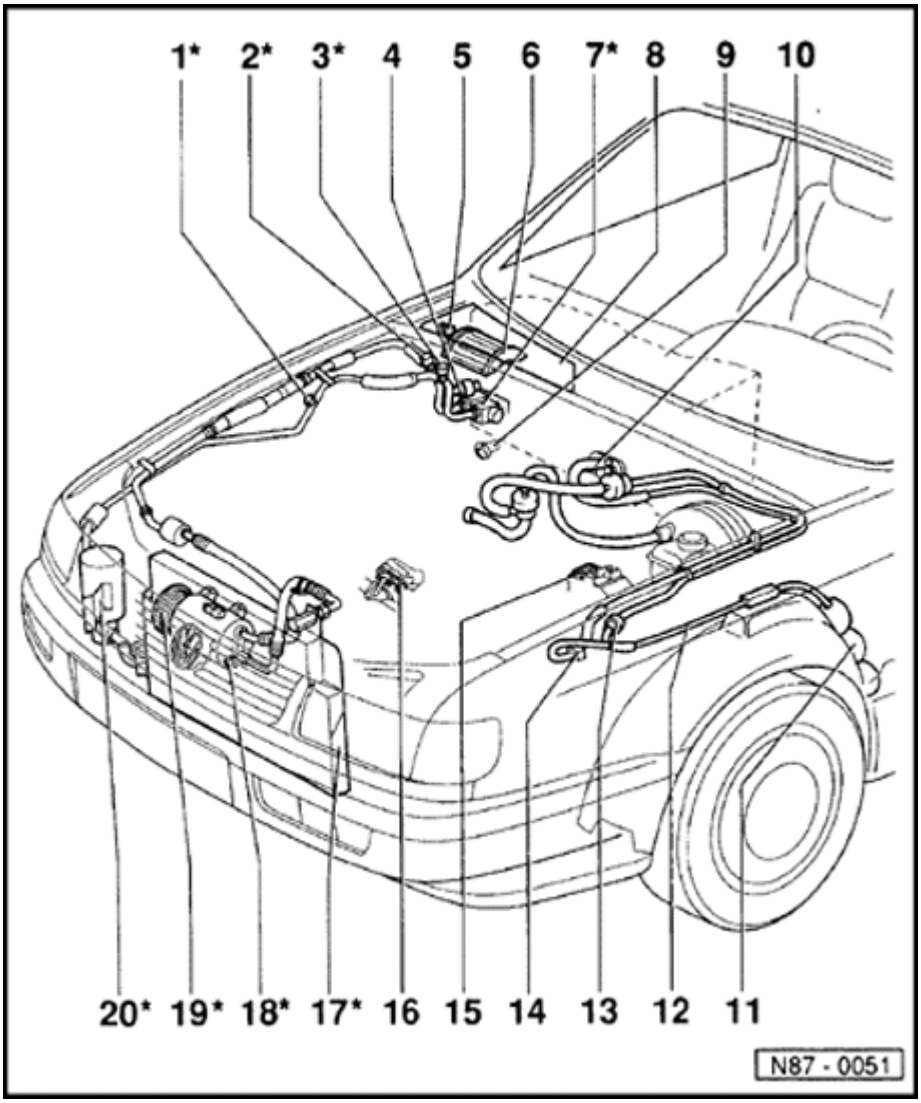

17 - Condenser*

18 - Pressure relief valve*

- Checking ⇒ Fig. 8

19 - A/C clutch -N25-*

20 - Receiver drier*

87-35

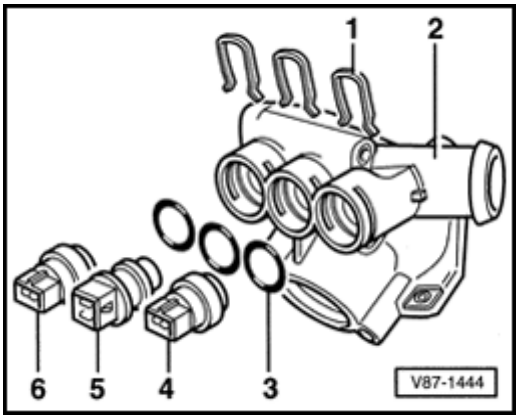

Fig. 1 A/C cut-out thermal switch -F163- and third speed coolant fan control (FC) thermal switch -F165- (engine code AAA), removing and installing

WARNING!

Cooling system is pressuri ed when engine is warm. Wear gloves and other protection and carefully release system pressure if necessary, before performing repairs.

Note:

Refill cooling system with fresh coolant after installing thermal switch.

1 - Clip

2 - Thermostat housing

3 - O ring

4 - Thermal switch -F163-/-F165-, brown

5 - Temperature sensor switch -G2-/-F87-, yellow

6 - Coolant temperature sensor -G62-, blue

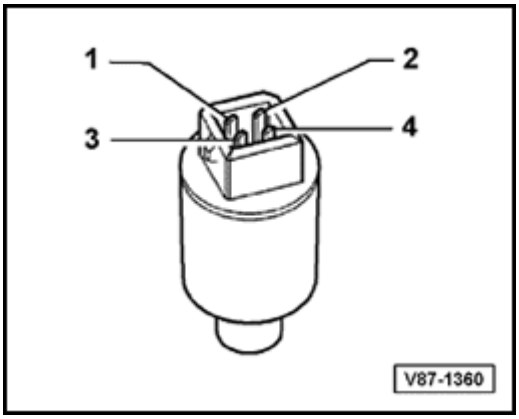

Fig. 2 A/C pressure switch -F129-, checking

- Visual check: Ensure that O-ring (color: red) 10.8 mm x 1.8 mm is seated in groove

Switch part between contacts -T4a/1- and -T4a/2 of connector housing switches magnetic coupling -N25- off when refrigerant system insufficiently filled or pressure too high.

- Opens below 1.2 bar (17.4 psi) and closes again above 2.4 bar (34.8 psi) (switching threshold)
- Opens above 32 bar (464 psi) and closes again below 24 bar (348 psi) (switching threshold)
- Briefly bridge circuit between chambers 1 and 2 with engine running. If the compressor clutch -N25- switches on, the refrigerant system is empty. Take vehicle to specialist service workshop.

Switch part between contacts 3 and 4 of connector housing

- Closes above 16 bar (232 psi) and opens below 12.5 bar (181.3 psi) (switching threshold)

87-37

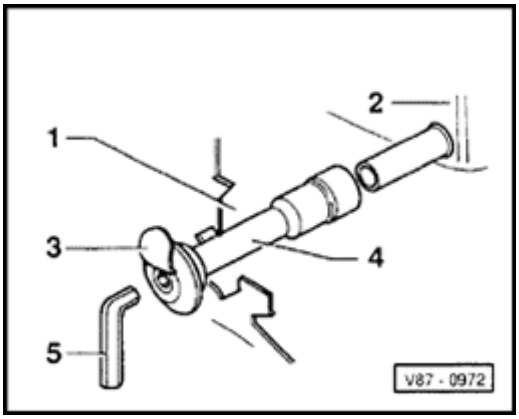

Fig. 3 Evaporator water drain valve, removing and installing

1 - Bulkhead

2 - Evaporator housing

3 - Valve flap, shown raised

4 - Water drain valve

5 - Hex key 14 mm

Removing:

- Turn valve 45° with hex key -5- and pull out.

Installing:

- When installing ensure lip faces downward.

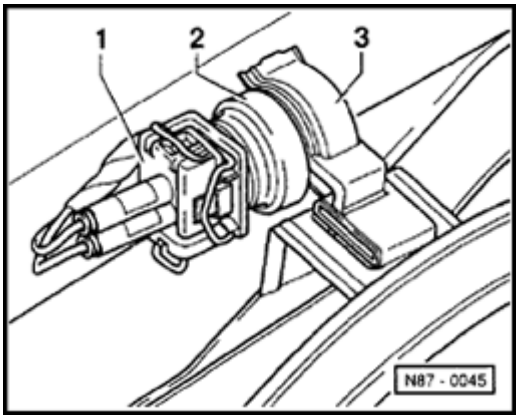

Fig. 4 Ambient temperature switch -F38-, removing and installing

Installed in plenum chamber right

1 - Connector

2 - Ambient temperature switch

3 - Retainer

87-38

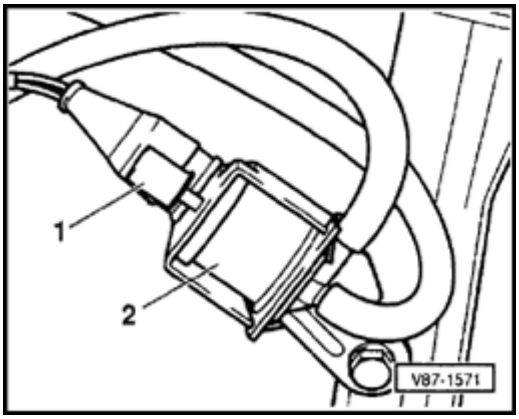

Fig. 5 Fresh air/recirculating air flap two-way valve -N63-, installing

1 - Cap

Check air passage slot

2 - Two-way valve (other designs possible)

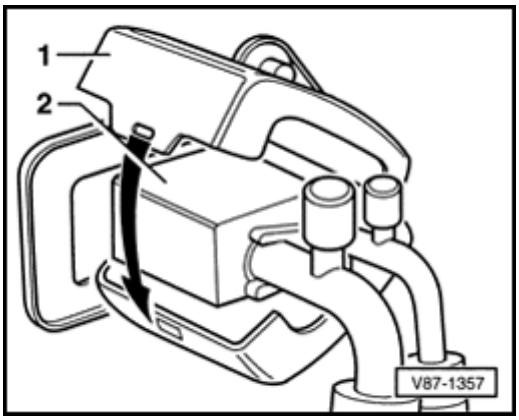

Fig. 6 Expansion valve insulation piece, checking

1 - Insulator

2 - Expansion valve

- The insulator prevents drop in air conditioner efficiency caused by increasing temperatures in the engine compartment.

87-39

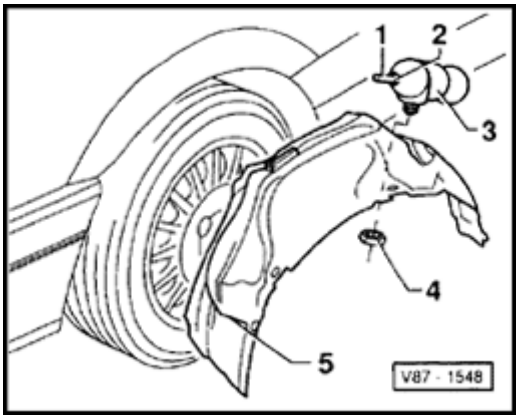

Fig. 7 Vacuum reservoir, removing and installing

1 - Plastic line

Installation depth: 30mm

2 - Rubber seal

3 - Vacuum reservoir

4 - Nut

5 - Wheel housing liner

- Wheel housing liner, removing and installing

⇒ *Repair Manual, Body Exterior, Interior, Repair Group 66 removing and installing wheel housing liner*

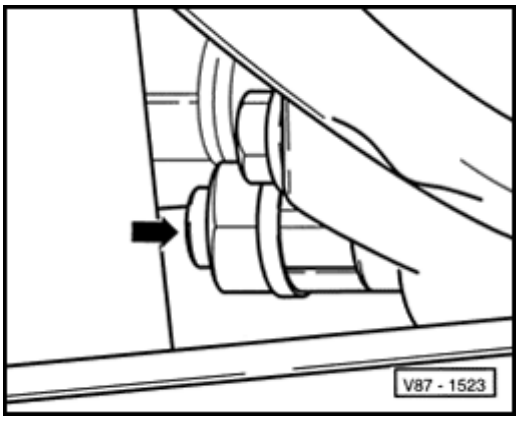

Fig. 8 Pressure relief valve on compressor, checking

- Task: protects refrigerant system against over-pressure
- The pressure relief valve indicates if valve has operated. An adhesive attached plate is pushed out. In this case take vehicle to specialist workshop.

87-40

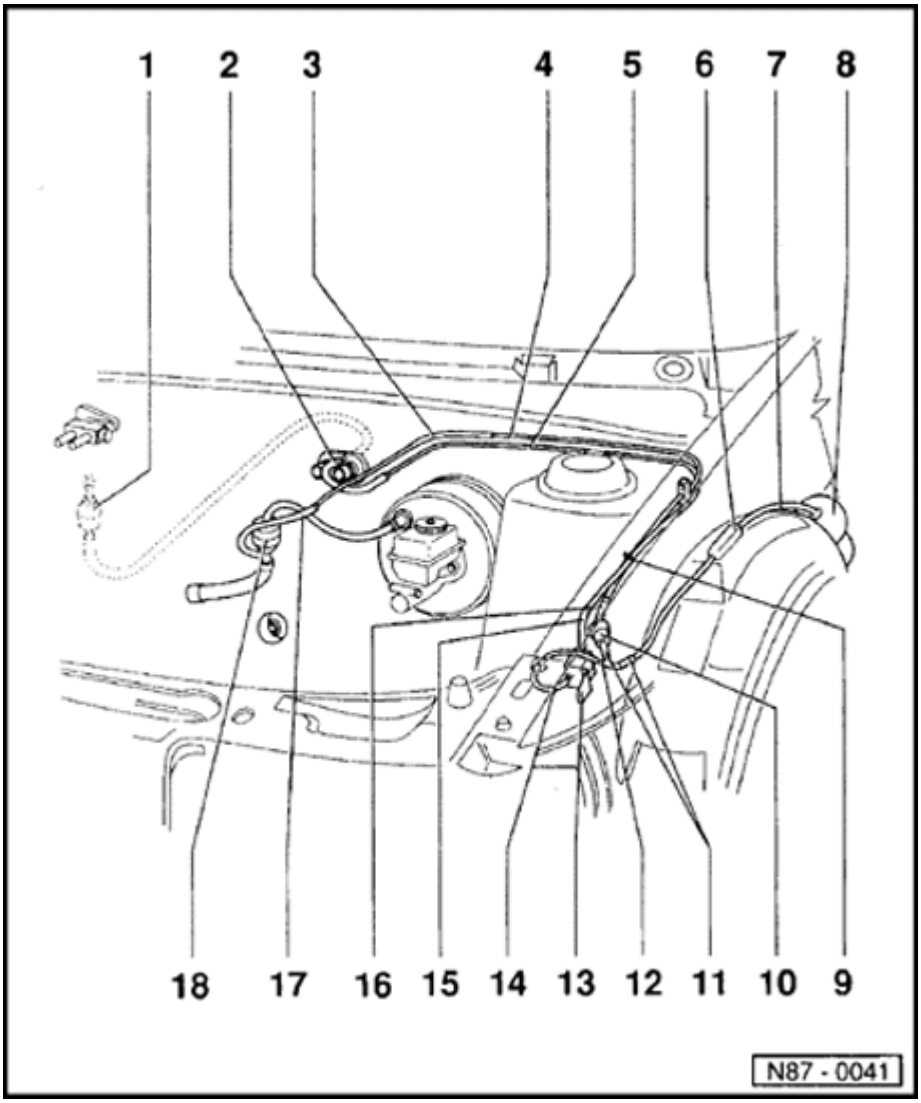

Vacuum hose layout

Note:

- *Insertion depth of vacuum hose in vacuum reservoir: 30 mm. Overlap of vacuum hose on plastic line: onto stop (approx. 15 mm)*

1 - Fresh air/recirculating air flap vacuum unit

2 - Reduction hose

3 - Hose

3.5 x 2 x 90 mm

4 - Plastic line

4 x 1 x 950 mm

87-41

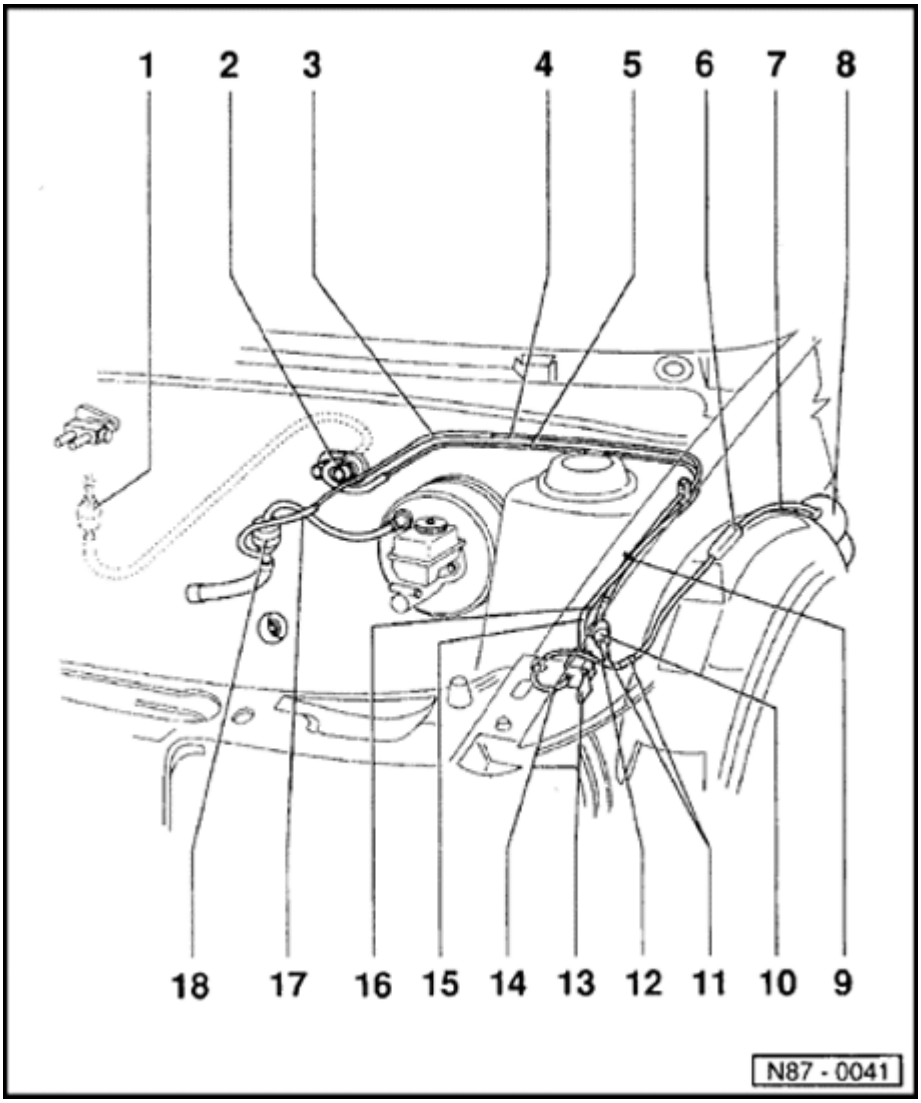

5 - Plastic line

4 x 1 x 1030 mm

6 - Foam line

7 - Plastic line

4 x 1 x 490 mm

8 - Vacuum reservoir

9 - Cable tie

10 - Non-return valve

Direction of suction indicated by arrow

11 - Hose

3.5 x 2 x 40 mm

12 - T-connection

13 - Fresh air/recirculating flap two-way valve - N63-

87-42

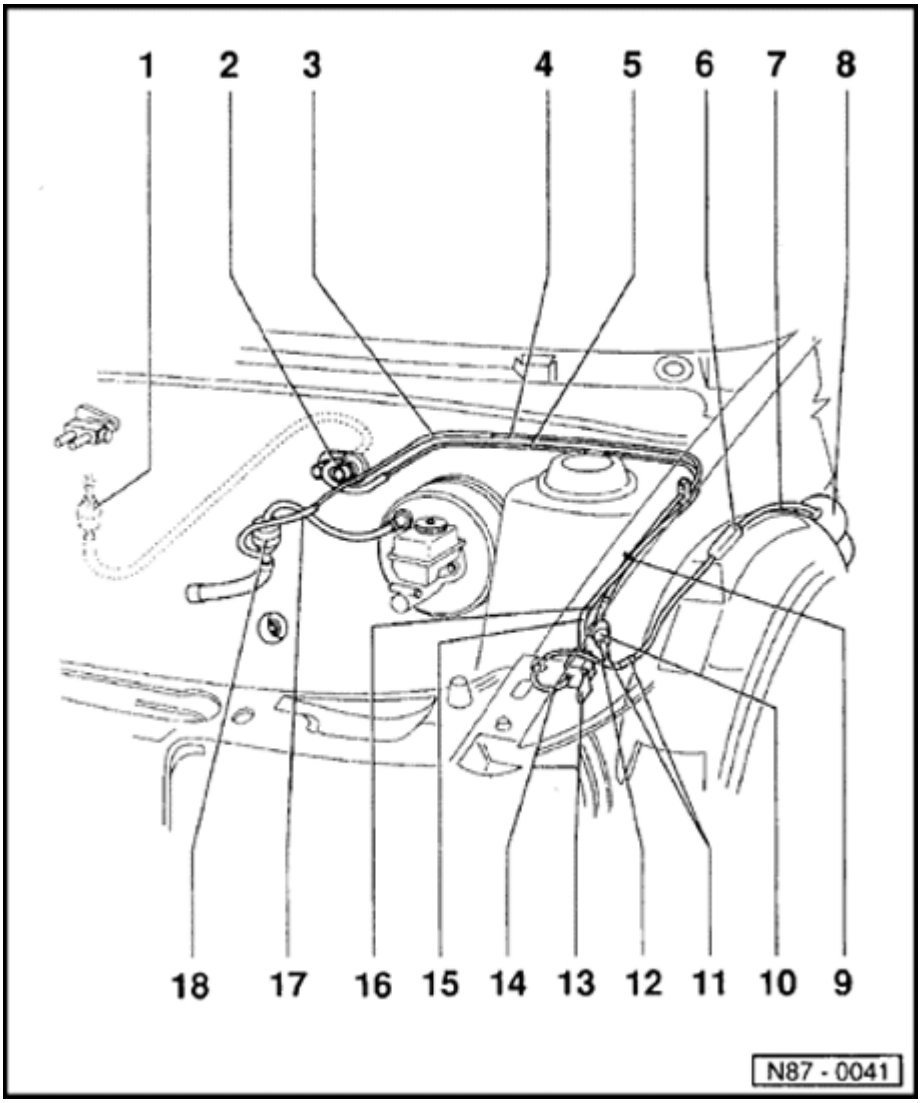

14 - Hose

3.5 x 2 x 350 mm

15 - Hose

3.5 x 2 x 245 mm

16 - Hose

3.5 x 2 x 116 mm

17 - Hose

3.5 x 2 x 116 mm

18 - Non-return valve

87-43

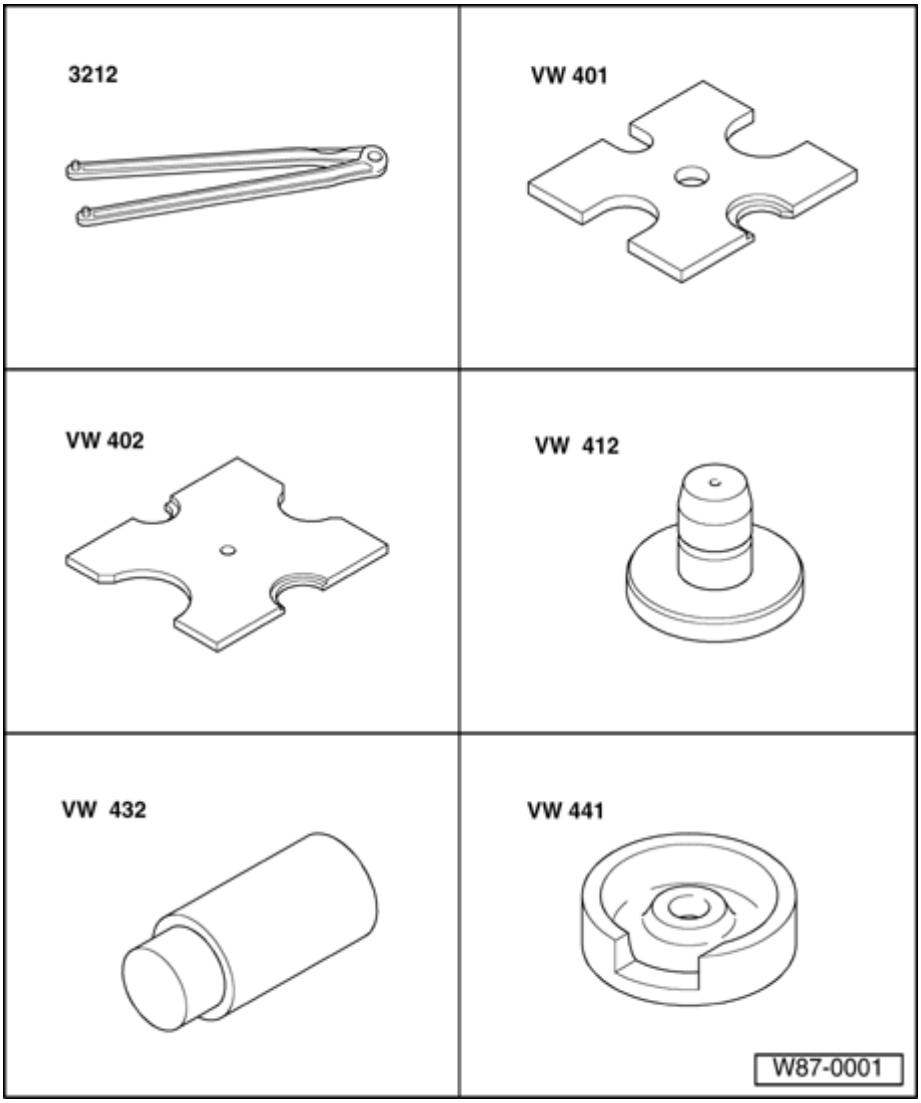

A/C clutch -N25- (Sanden), servicing (compressor removed)

Special tools, testers, measuring instruments and auxiliary items required

- 3212 Pin wrench
- VW 401 Thrust plate
- VW 402 Thrust plate
- VW 412 Thrust disc
- VW 432 Arbor (50 mm)
- VW 441 Base block

Not shown

- Two-arm puller with 100 mm span depth, such as Kukko 20-10 or equivalent (locally available)
- Depth gauge (locally available)

87-44

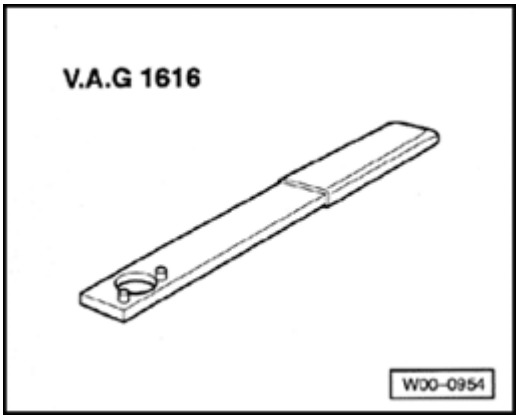

- VAG 1616 Retainer (for clutch plate)

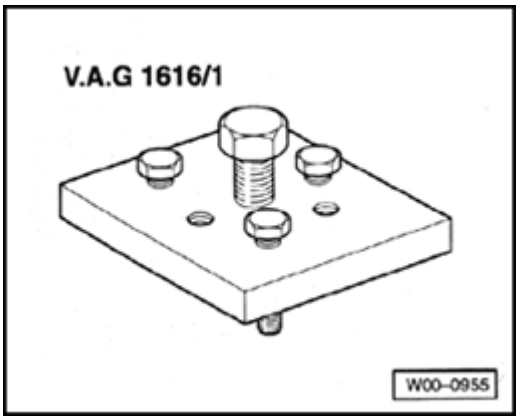

- VAG 1616/1 Puller (for A/C clutch)

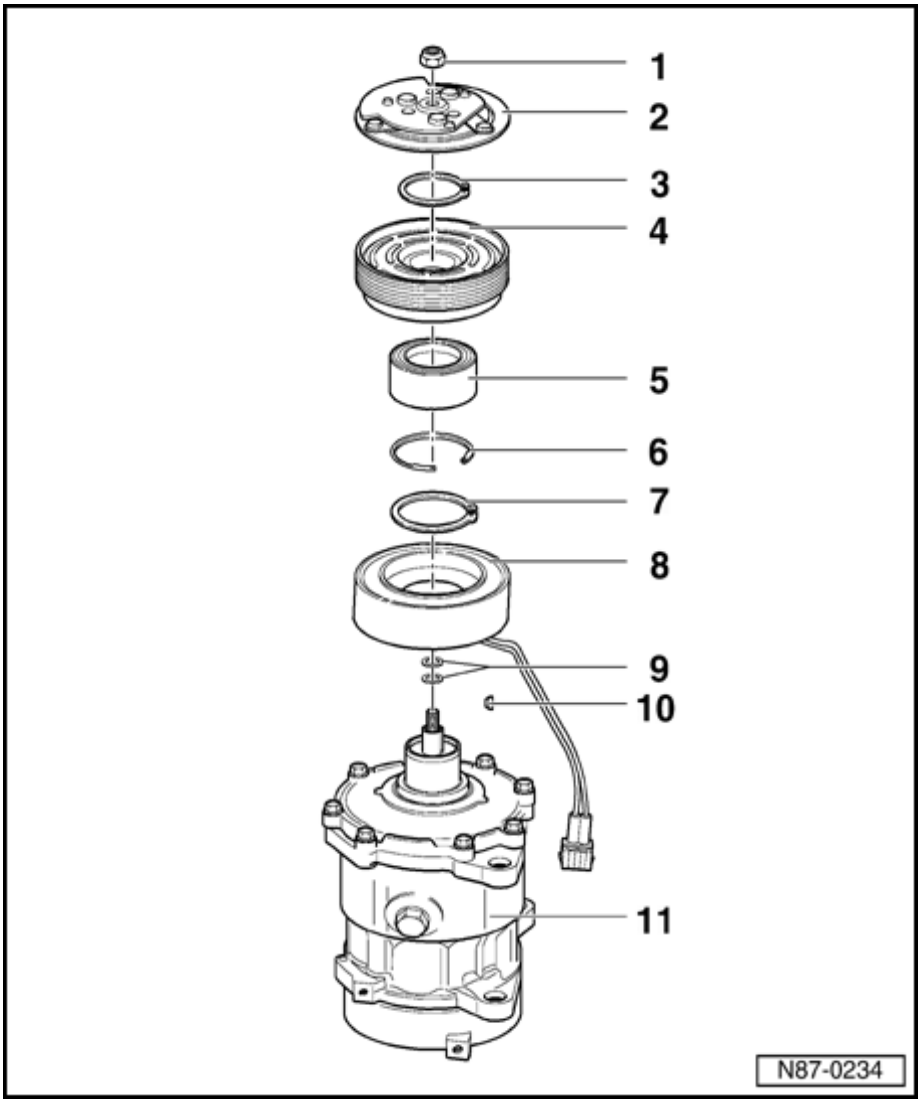

First do the following:

- Discharge A/C refrigerant system ⇒ Page 87-96
- Disconnect electrical connection for A/C clutch -N25-.
- Remove compressor from bracket,

♦ 4-cylinder gasoline engine page ⇒ Page 87-54 .

♦ 4-cylinder TDI engine page ⇒ Page 87-57 .

♦ 6-cylinder engine page ⇒ Page 87-60 .

1 - Self-locking nut

♦ Tightening torque 20 Nm (15 ft. lb.)

♦ Always replace

♦ Removing ⇒ Fig. 1

2 - Clutch plate

♦ Removing ⇒ Fig. 2

♦ Checking/adjusting clearance ⇒ Fig. 7

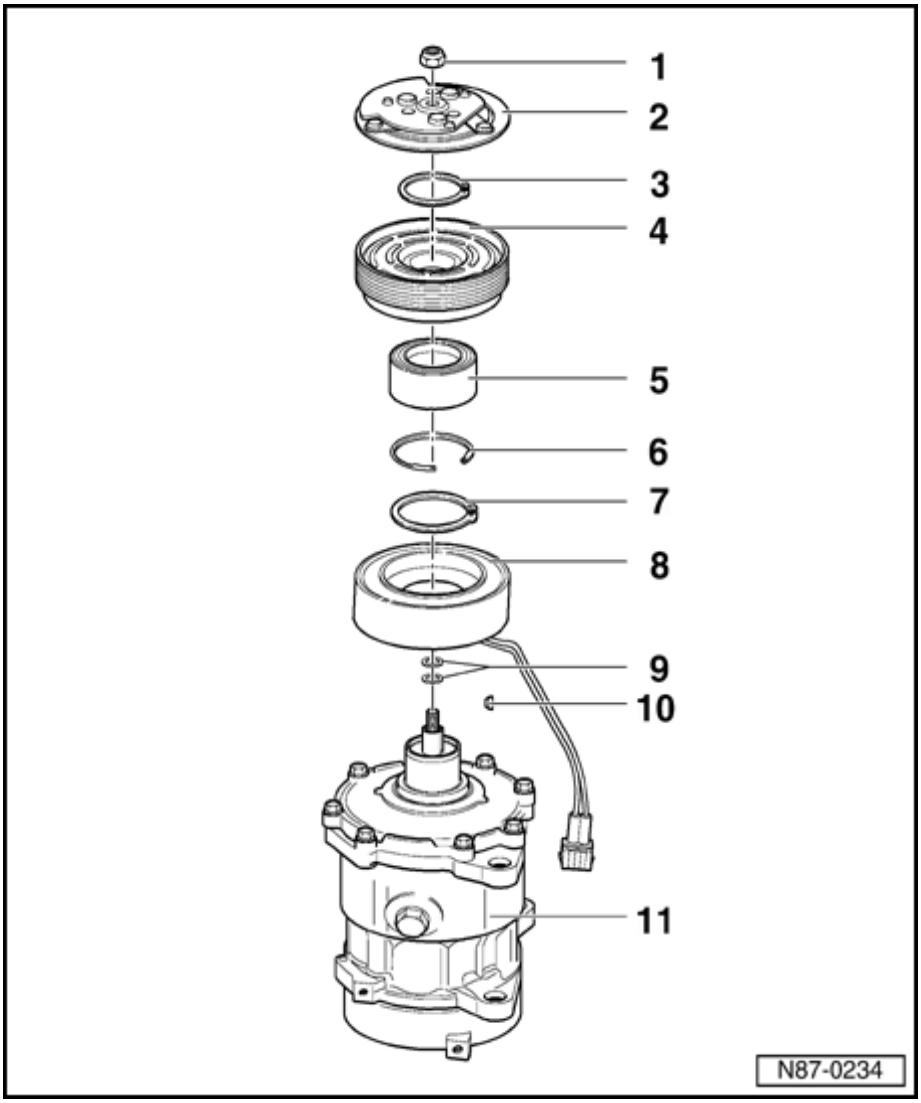

3 - Circlip

- Always replace
- Install correctly: Flat side faces compressor
- Ensure correct seating in groove

4 - Ribbed belt pulley

- Removing ⇒ Fig. 3
- Installing ⇒ Fig. 6

5 - Bearing

- Removing ⇒ Fig. 4
- Installing ⇒ Fig. 5

6 - Circlip

- Always replace
- Install correctly: Flat side faces compressor
- Ensure correct seating in groove

87-47

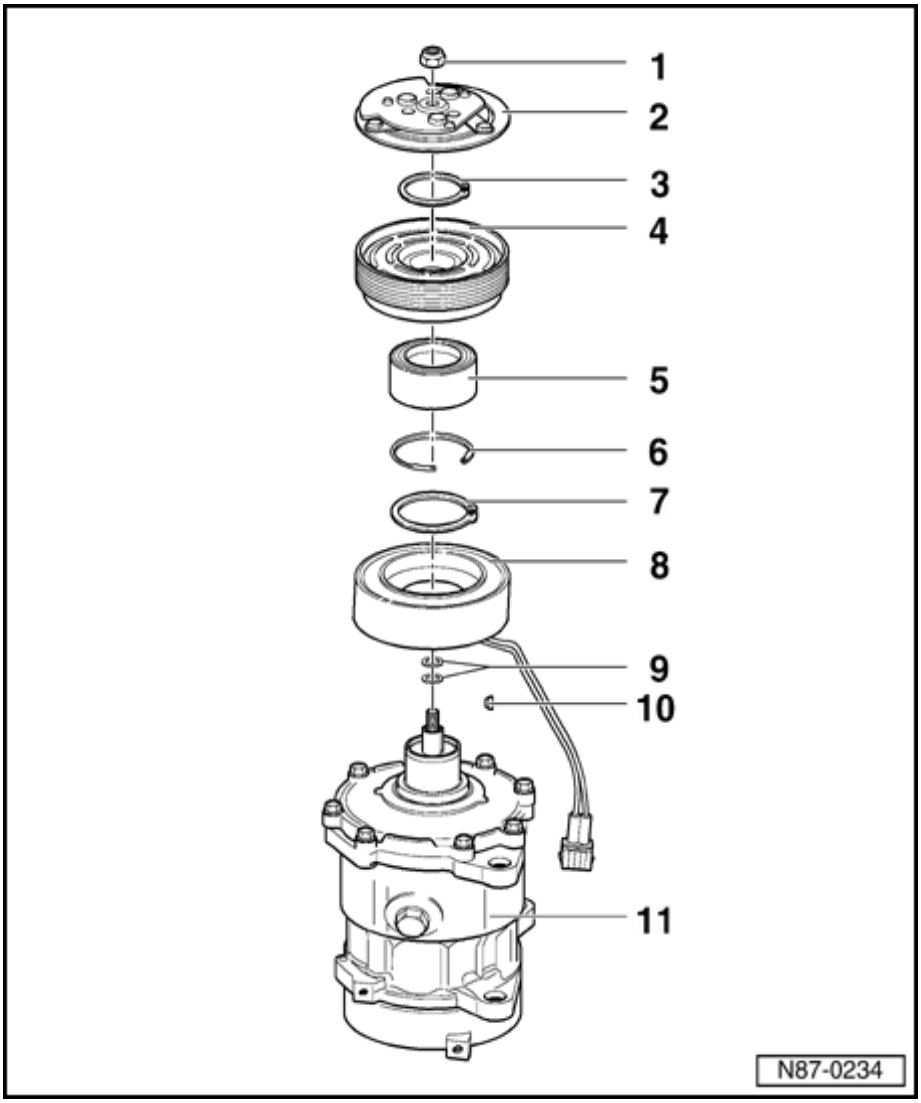

7 - Circlip

- Always replace
- Install correctly: Flat side faces compressor
- Ensure correct seating in groove

8 - Clutch coil

- Secured with fitted pin and circlip -7-

Note:

A thermo-fuse is incorporated into the clutch coil. Current to the clutch coil is interrupted in the event of compressor overheating (E.g.: a binding compressor).

9 - Shims

- Provide clearance between clutch plate and pulley
- Checking/adjusting clearance ⇒ Fig. 7

10 - Key

11 - Compressor

87-48

A/C Clutch -N25-, removing and installing

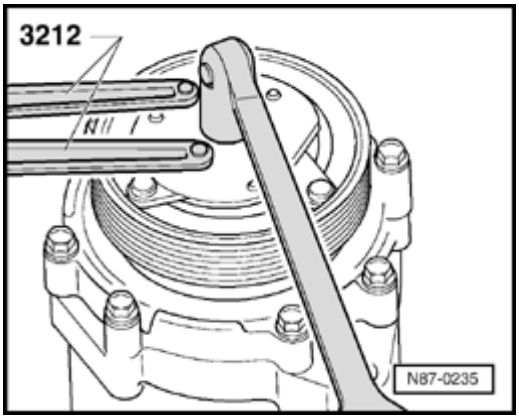

Fig. 1 Self-locking nut, removing

- Counter-hold clutch plate using pin wrench 3212 or VAG 1616 and remove nut.

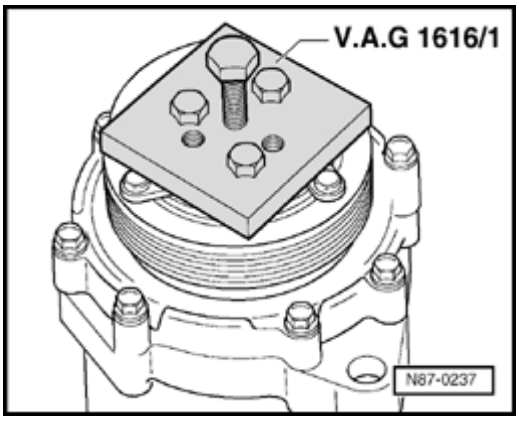

Fig. 2 Clutch plate, removing

- Use puller VAG 1616/1.

Note:

Three retaining bolts on VAG 1616/1 have 1/4 thread.

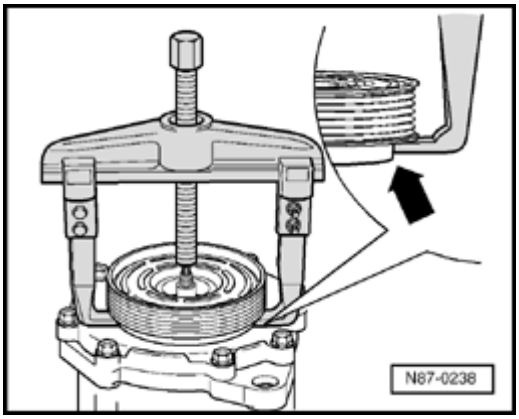

Fig. 3 Ribbed-belt pulley, removing

- Remove circlip ⇒ Page 87-46 , key 3 .
- Use locally available two-arm puller with 100 mm span depth (E.g.: Kukko 20-10 or equivalent).
- Place puller arm under pulley as illustrated -arrow-.

CAUTION!

Place puller arms under pulley only far enough so as to not damage clutch coil upon removal.

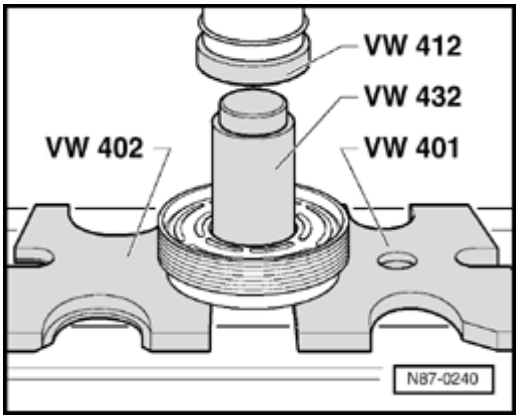

Fig. 4 Bearing, removing

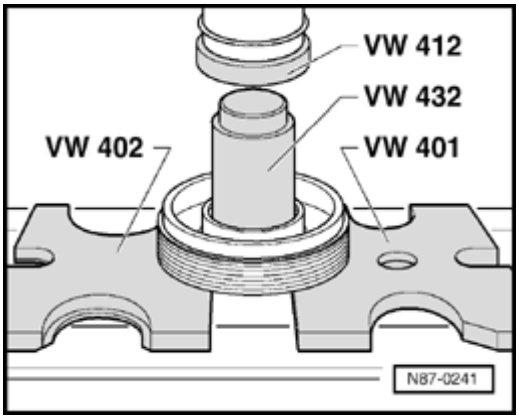

Fig. 5 Bearing, installing

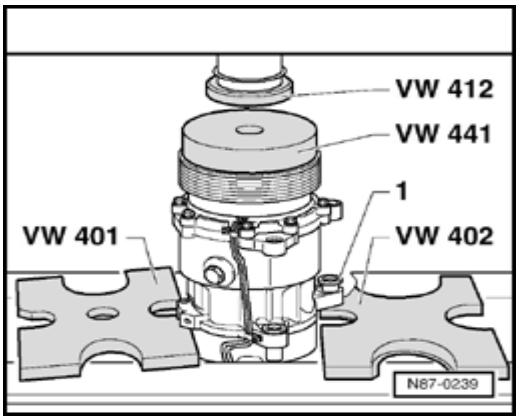

Fig. 6 Ribbed-belt pulley, installing

CAUTION!

In order to prevent pulley deformation while pressing, ensure compressor remains flat at all times.

- Displace threaded bushing -1-.
- Install circlip ⇒ Page 87-46 , key 3 .

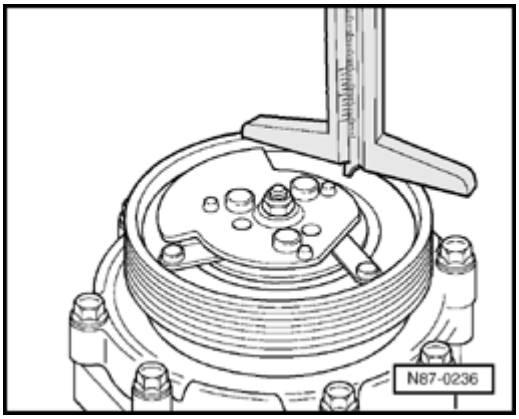

Fig. 7 Clutch plate, checking/adjusting clearance

- With compressor grounded, repeatedly apply 12V to clutch coil terminal connection.
- Measure clearance between clutch plate and pulley around entire circumference.

♦ Specification: 0.4.....0.8 mm

Notes:

♦ *Clearance must be within tolerance around entire circumference.*

♦ *If clearance is outside the allowable tolerance, remove clutch plate and adjust clearance by removing or installing shims ⇒ Page 87-47 , key 9 .*

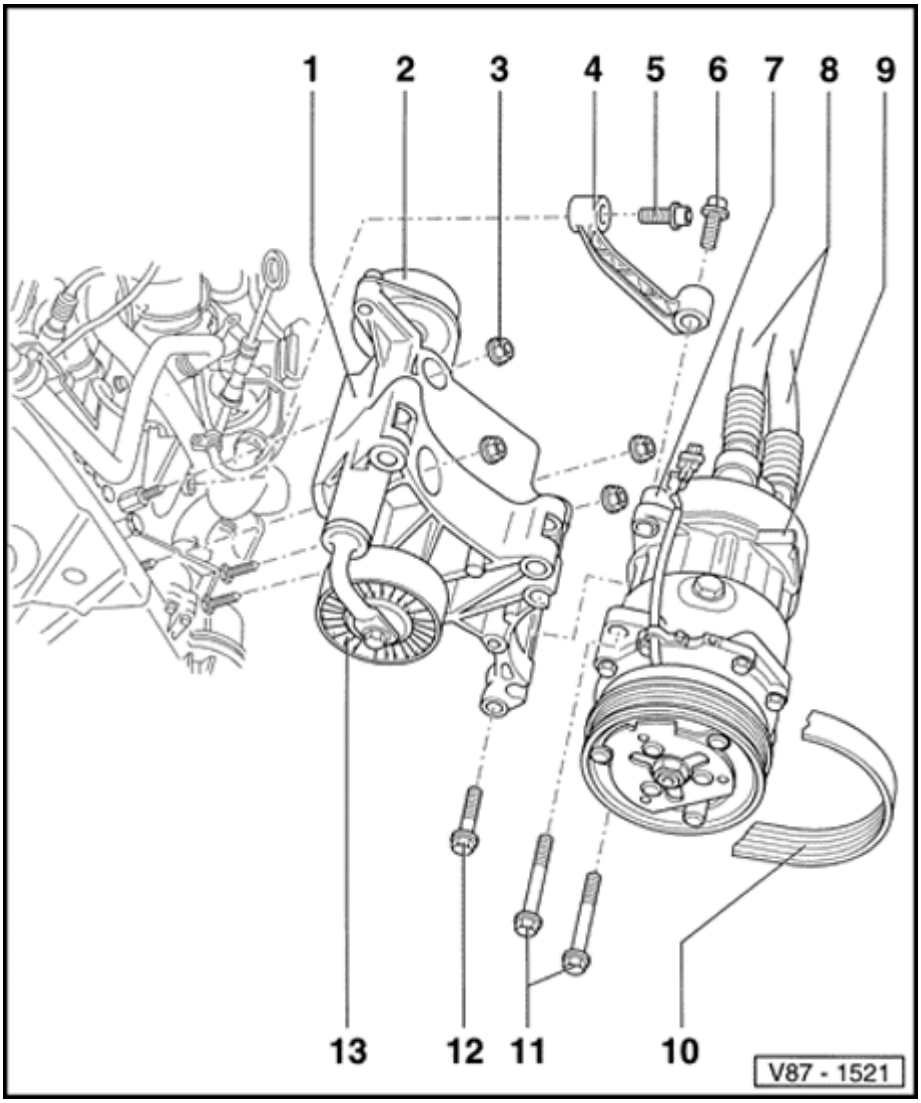

Compressor bracket, removing and installing

4-cyl. gasoline engine

Note:

The compressor bracket and related components can be removed and installed without having to open the refrigerant system

1 - Generator (GEN) and compressor bracket

- Generator, removing and installing

⇒ *Repair Manual, Electrical Equipment, Repair Group 27*

2 - Tensioning element for tensioner

3 - Hex nut M8

- 30 Nm (22 ft. lb)

87-53

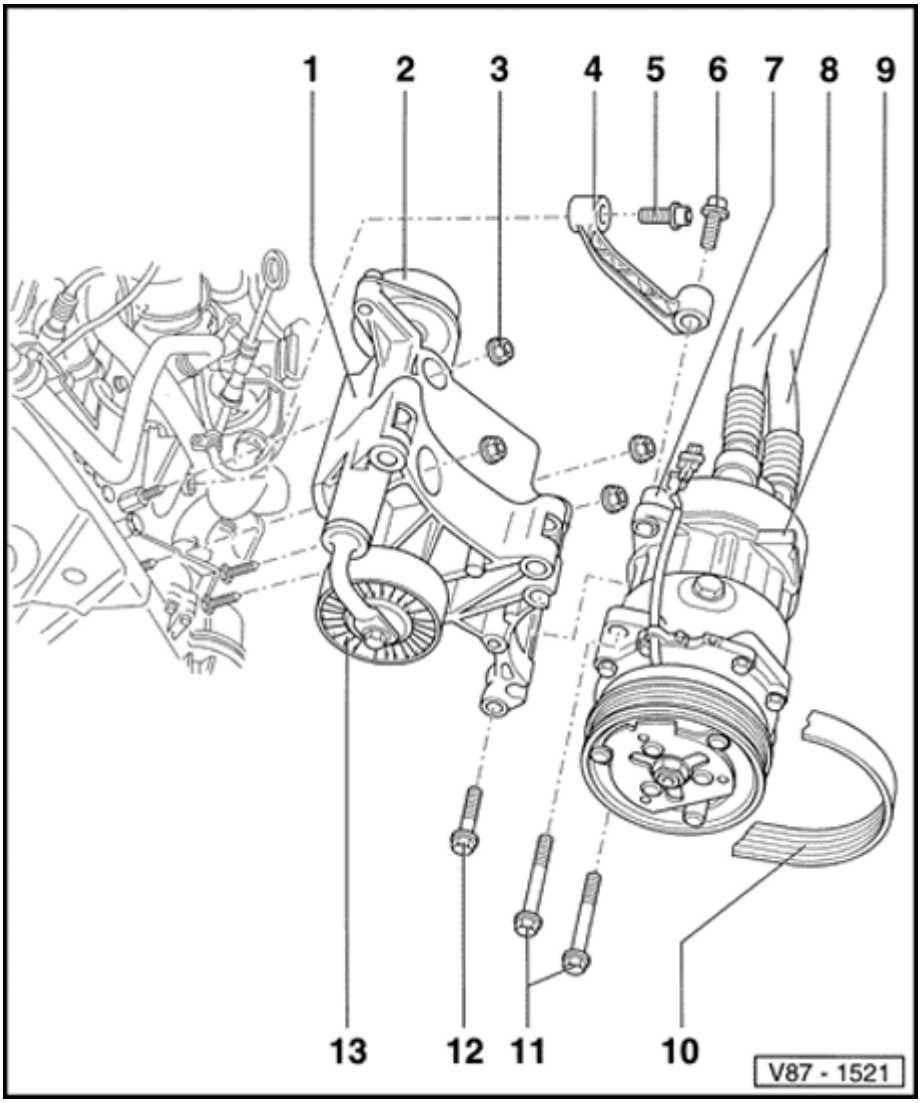

4 - Compressor bracket

- Installing:
  - Insert bolts - 5 - and - 6 - 2 to 5 turns.
  - Screw in bolt -6- until bracket contacts threaded bushing - 7 -.
  - First tighten bolt - 5 - to 45 Nm (4 to 33 ft. lb), then tighten bolt - 6 - to 45 Nm. (4 to 33 ft. lb)

5 - Socket head bolt M10x30

- 45 Nm (33 ft. lb)

6 - Socket head bolt M10x30

- 45 Nm (33 ft. lb)

7 - Threaded sleeve

8 - Refrigerant hoses

87-54

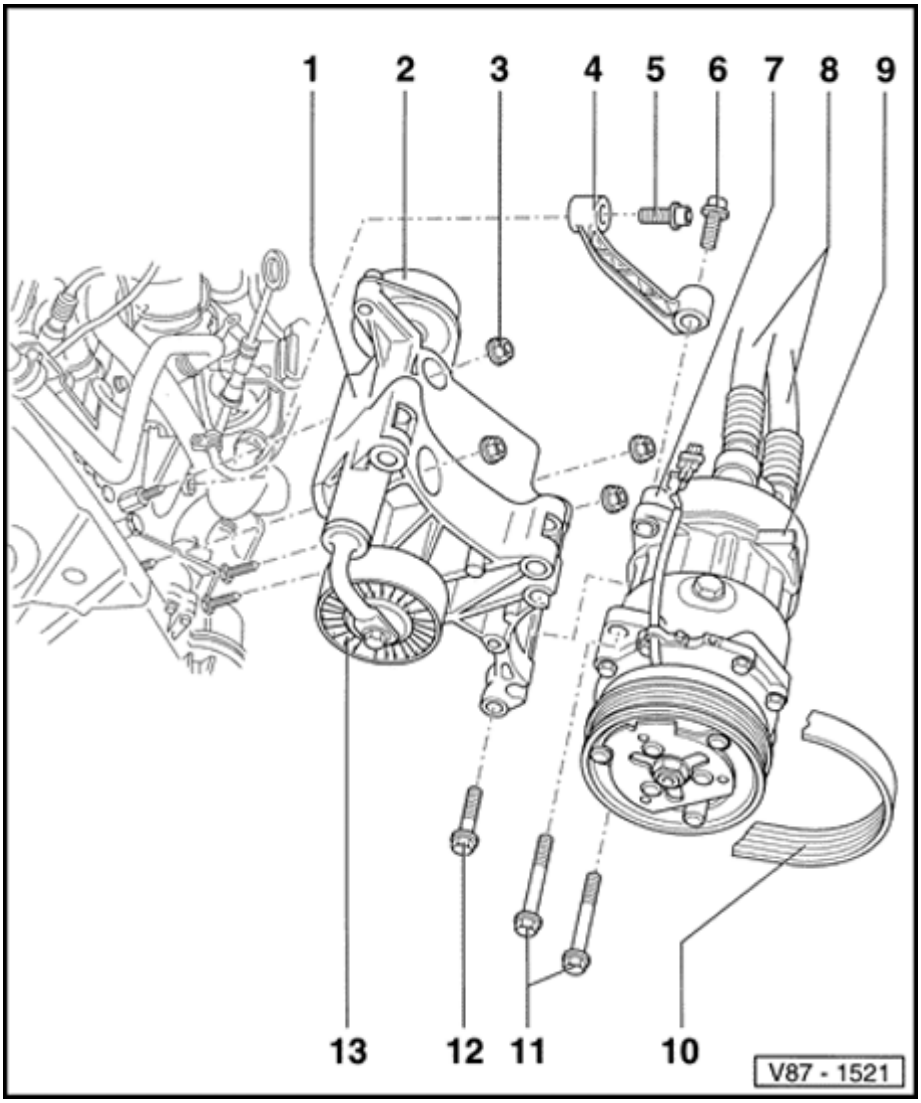

9 - Compressor

- Removing:
  - Loosen hex bolt - 11 - two turns and knock-back threaded sleeve - 7 - from compressor. Then remove hex bolts.

10 - Ribbed belt

- Removing and installing

⇒ *Repair Manual, 2.0 Liter 4-Cyl. 2V Engine Mechanical, Engine Code(s): ABA m.y. 1995, Repair Group 13*

11 - Hex bolt M10x112

- 45 Nm (33 ft. lb)

12 - Hex bolt M8x42

- 25 Nm (18 ft. lb)

13 - Tensioner

87-55

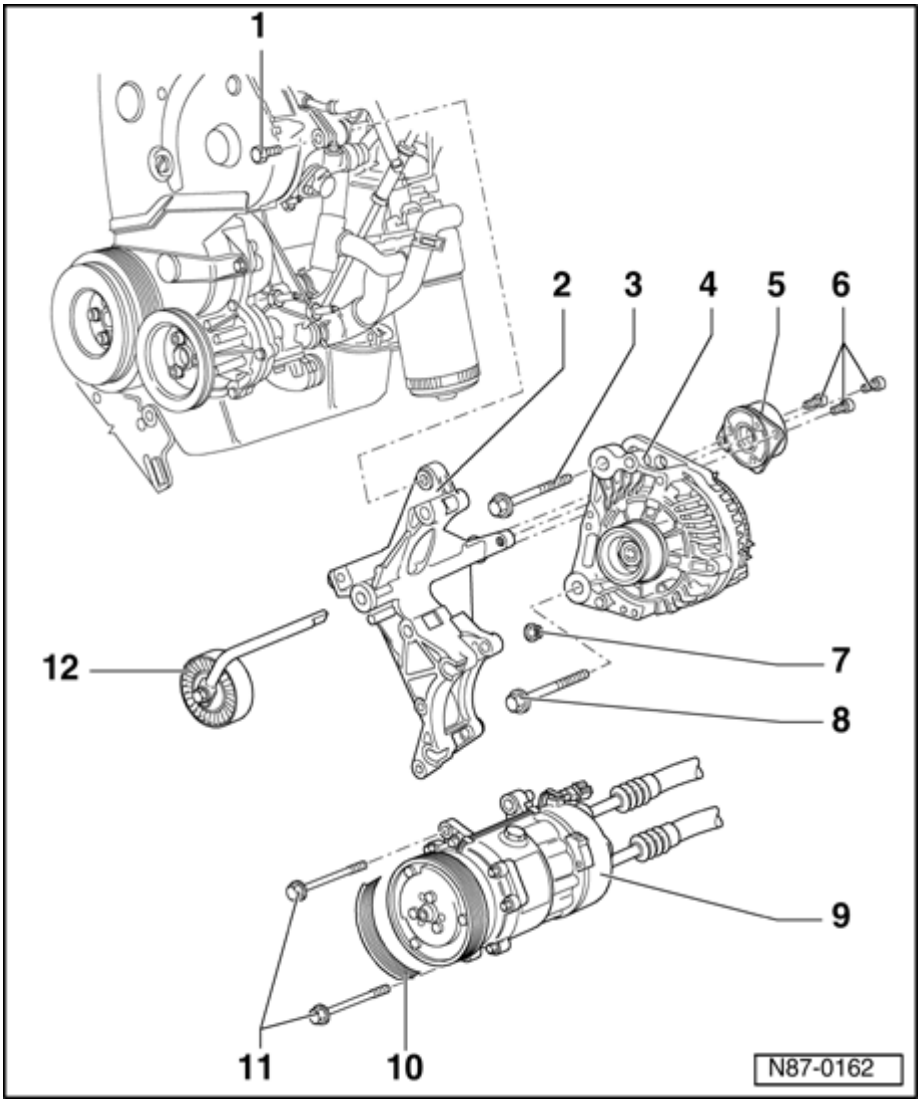

4-cyl. TDI engine

Note:

The compressor bracket and related components can be removed and installed without having to open the refrigerant system

1 - Hex bolt M8x22

- 25 Nm (18 ft. lb)

2 - Generator (GEN) and compressor bracket

- Removing: first remove generator -4-

⇒ *Repair Manual, Electrical Equipment, Repair Group 27*

- Then remove compressor -9-

3 - Hex bolt M8x85

- 25 Nm (18 ft. lb)

87-56

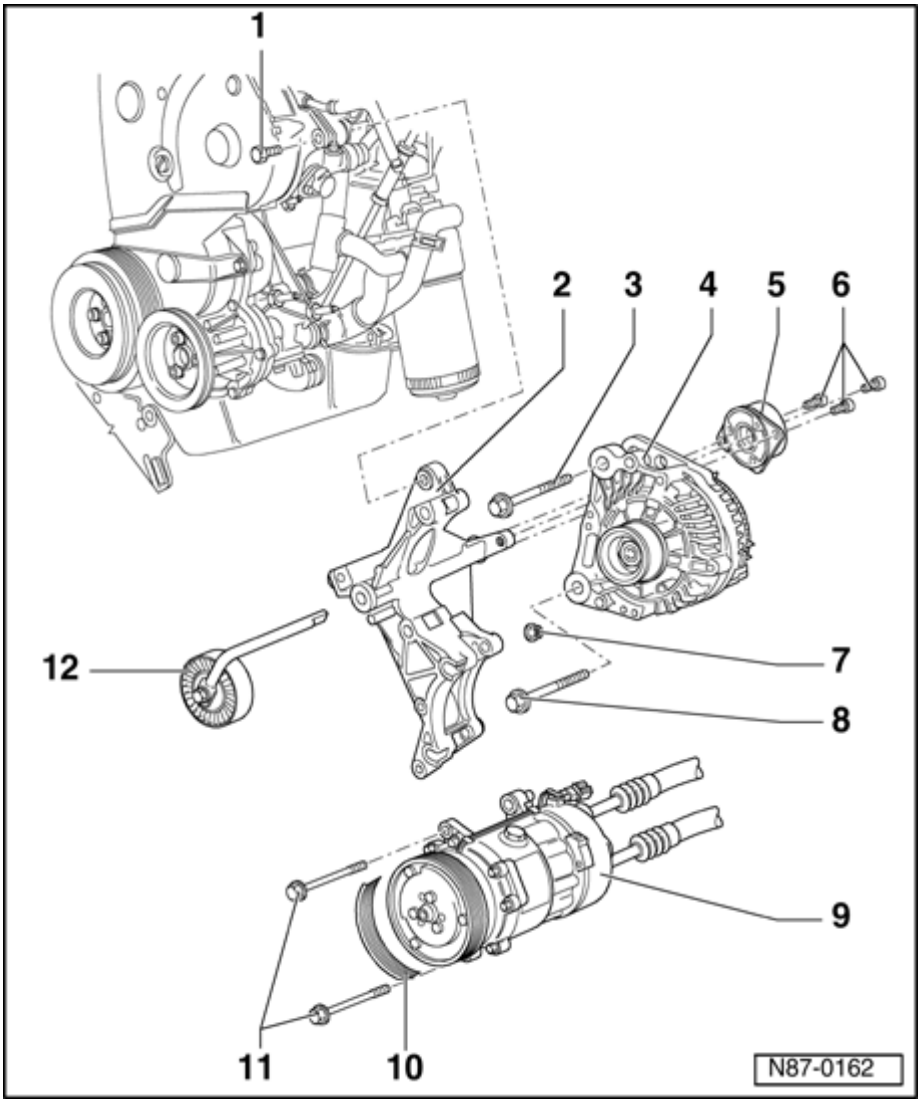

4 - Generator (GEN)

- Removing:

⇒ *Repair Manual, Electrical Equipment, Repair Group 27*

5 - Tensioning element for tensioner roller

6 - Hex socket bolt M8x22

- 25 Nm (18 ft. lb)
- Qty.: 3

7 - Hex nut M8

- 30 Nm (22 ft. lb)
- Qty.: 4

8 - Hex bolt M8x85

- 25 Nm (18 ft. lb)

87-57

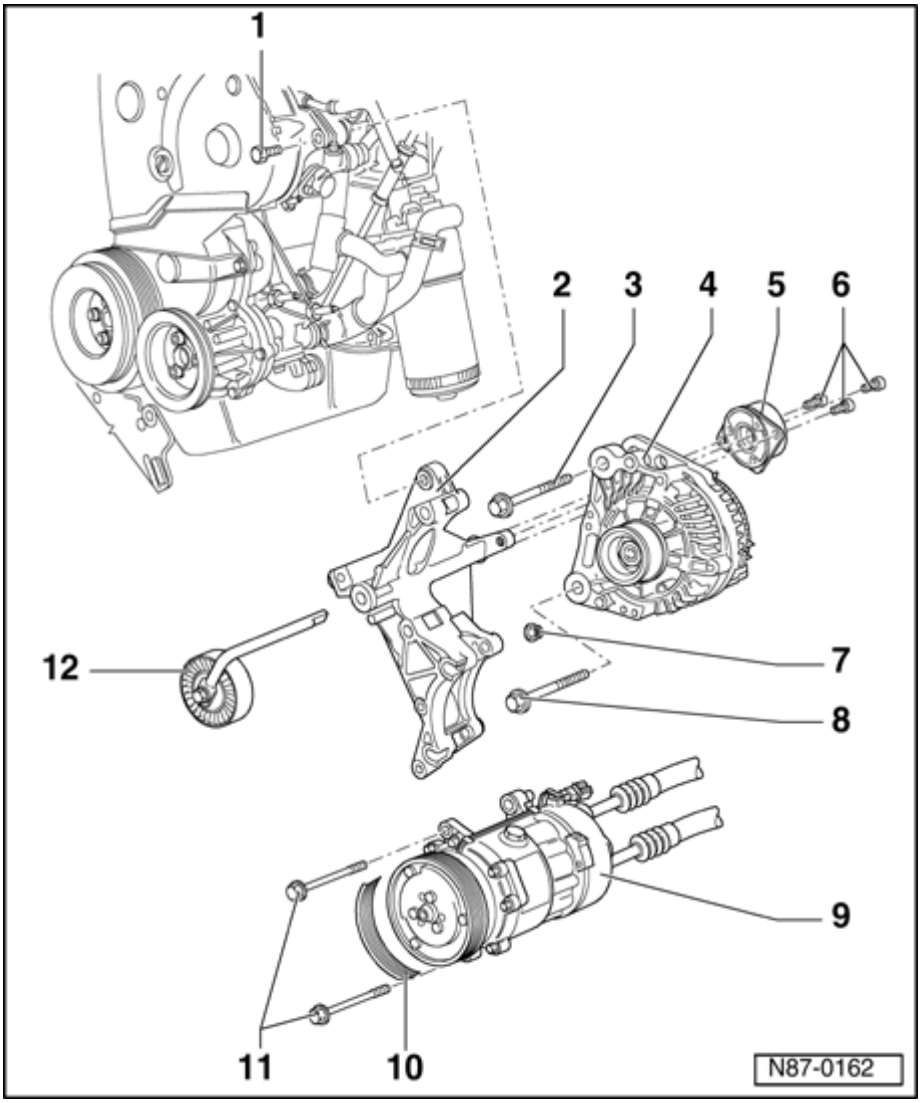

9 - Compressor

- Removing:
  - Loosen hex bolt - 11 - two turns and knock-back threaded sleeve from compressor. Then remove hex bolts.

10 - Ribbed belt

- Removing and installing

⇒ *Repair Manual, 1.9 Liter 4-Cyl. 2V TDI Engine Mechanical, Engine Code(s): AAZ, 1Z, Repair Group 13*

11 - Hex bolt M10x112

- 45 Nm (33 ft. lb)
- Qty.: 2

12 - Tensioning roller

- Removing:
  - Loosen M6X16 hex bolt at tensioning element and force out from housing with hammer.

87-58

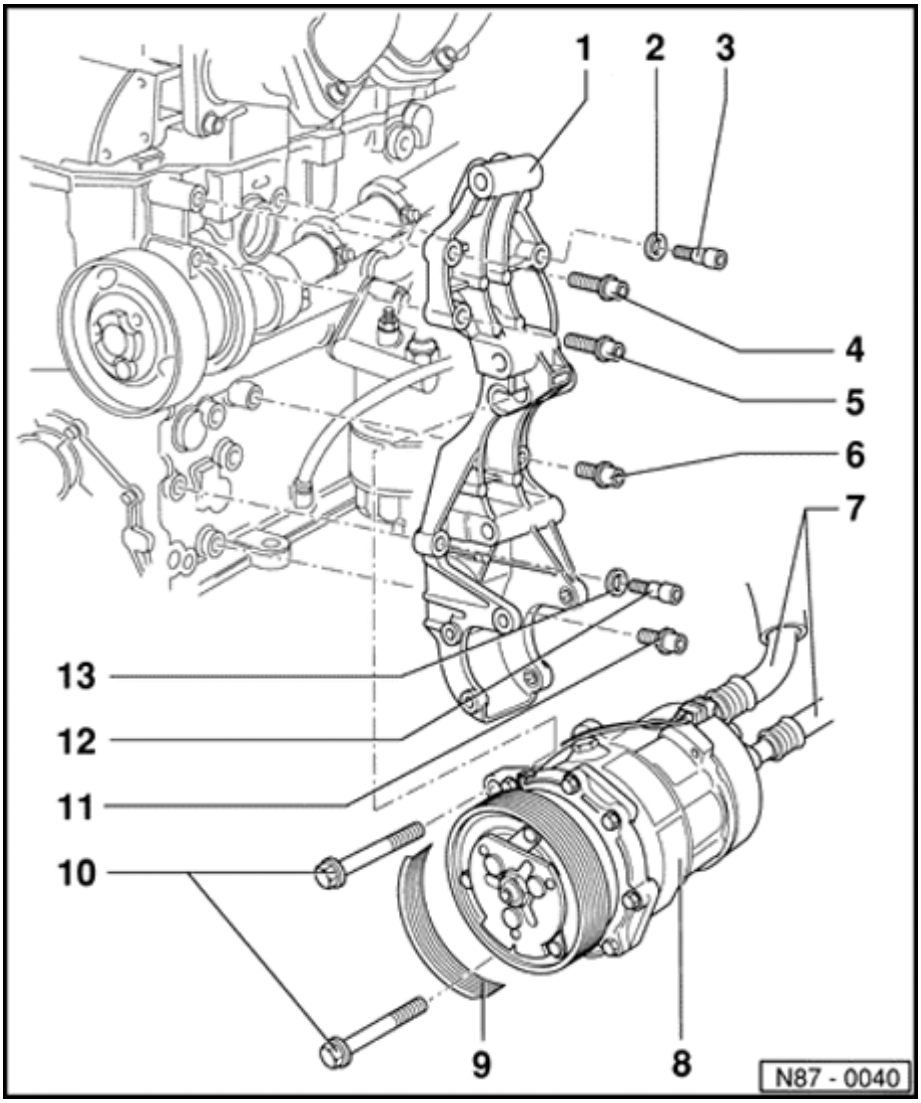

6-cyl. engine

Note:

Compressor and related parts can be removed and installed without having to open refrigerant system

1 - Generator (GEN), compressor and power steering pump bracket

♦ Removing:

- First remove generator (GEN), compressor - 8 - and Power steering pump
- Removing and installing generator (GEN)

⇒ *Repair Manual, Electrical Equipment, Repair Group 27 Removing and installing generator (GEN).*

- Remove power steering pump

⇒ *Repair Manual, Suspension, Wheels, Brakes, Steering, Repair Group 48*

♦ Installing:

- First, fit "fitted bolts.

⇒ *Repair Manual, Suspension, Wheels, Brakes, Steering, Repair Group 48*

87-59

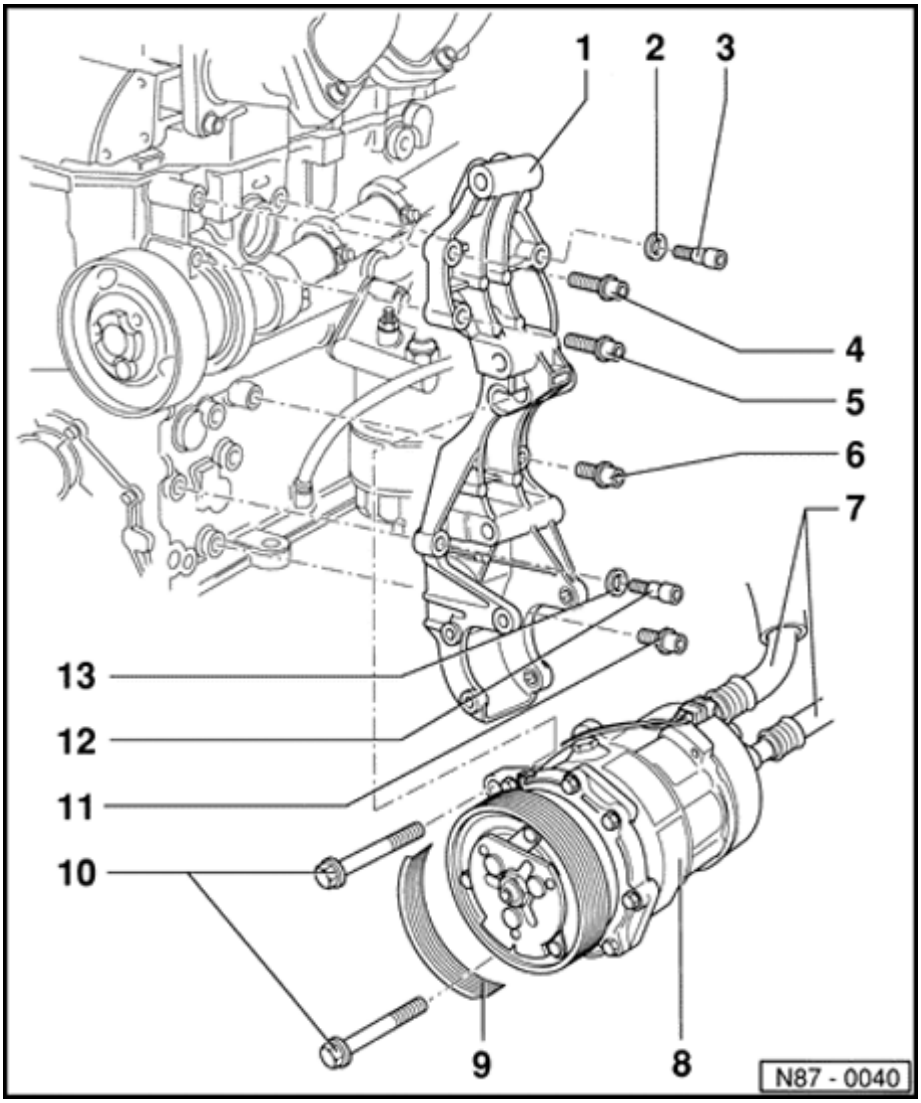

2 - Washer 8.4x16x1.6

3 - Fitting bolt M8x28

- 25 Nm (18 ft. lb)

4 - Socket head bolt M8x30

- 25 Nm (18 ft. lb)

5 - Socket head bolt M8x30

- 25 Nm (18 ft. lb)

6 - Socket head bolt M8x38

- 25 Nm (18 ft. lb)

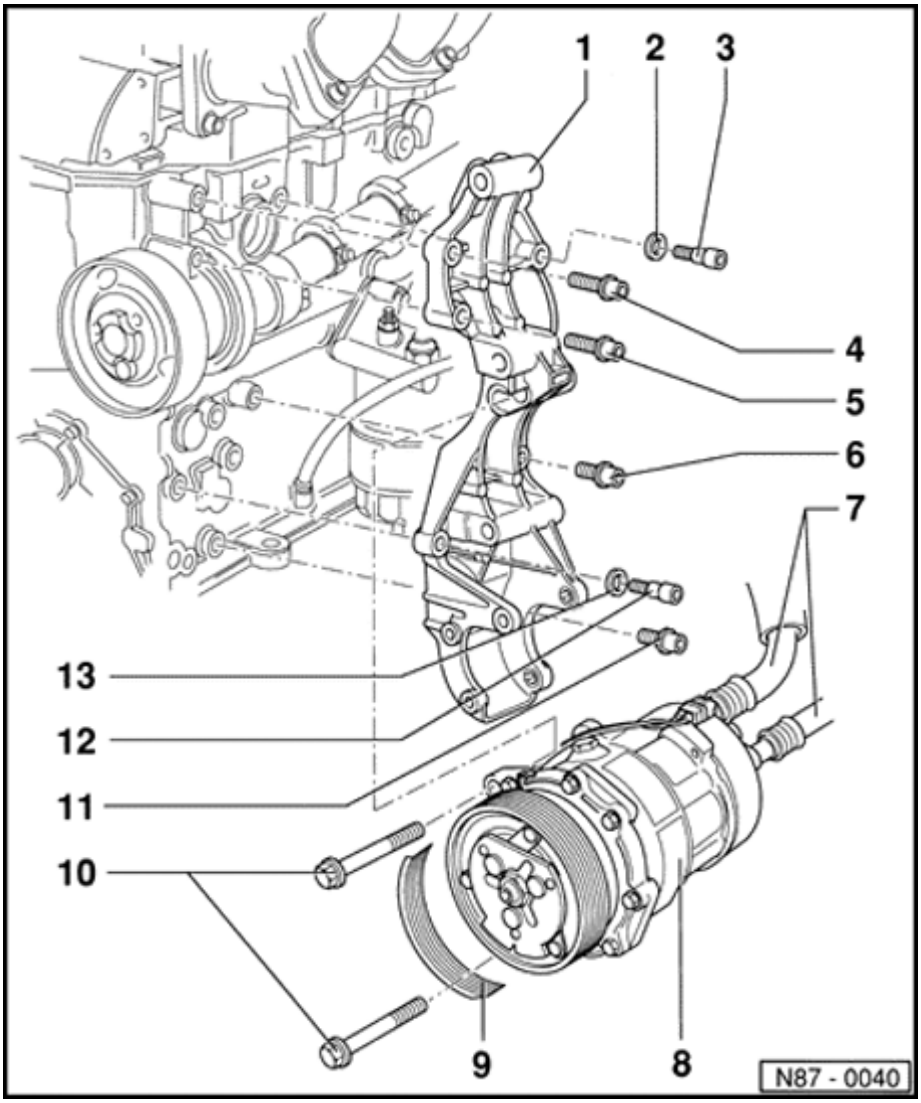

7 - Refrigerant hoses

8 - Compressor

- Removing:

  - First discharge refrigerant circuit ⇒ Page 87-96 .

  - Remove front bumper

⇒ *Repair Manual, Body Exterior, Interior, Repair Group 63*

  - Loosen hood lock carrier and pull forward.

⇒ *Repair Manual, Body Exterior, Interior, Repair Group 50*

  - Remove headlight housing

⇒ *Repair Manual, Electrical Equipment, Repair Group 94*

  - Remove ribbed belts - 9 -

⇒ *Repair Manual, 2.8 Liter VR6 2V Engine Mechanical, Engine Code(s): AAA, Repair Group 13*

  - Generator (GEN), remove

⇒ *Repair Manual, Electrical Equipment, Repair Group 27*

  - Loosen hex bolts - 10 - a couple of turns and knock-

back threaded sleeves from compressor. Then remove hex bolts.

87-61

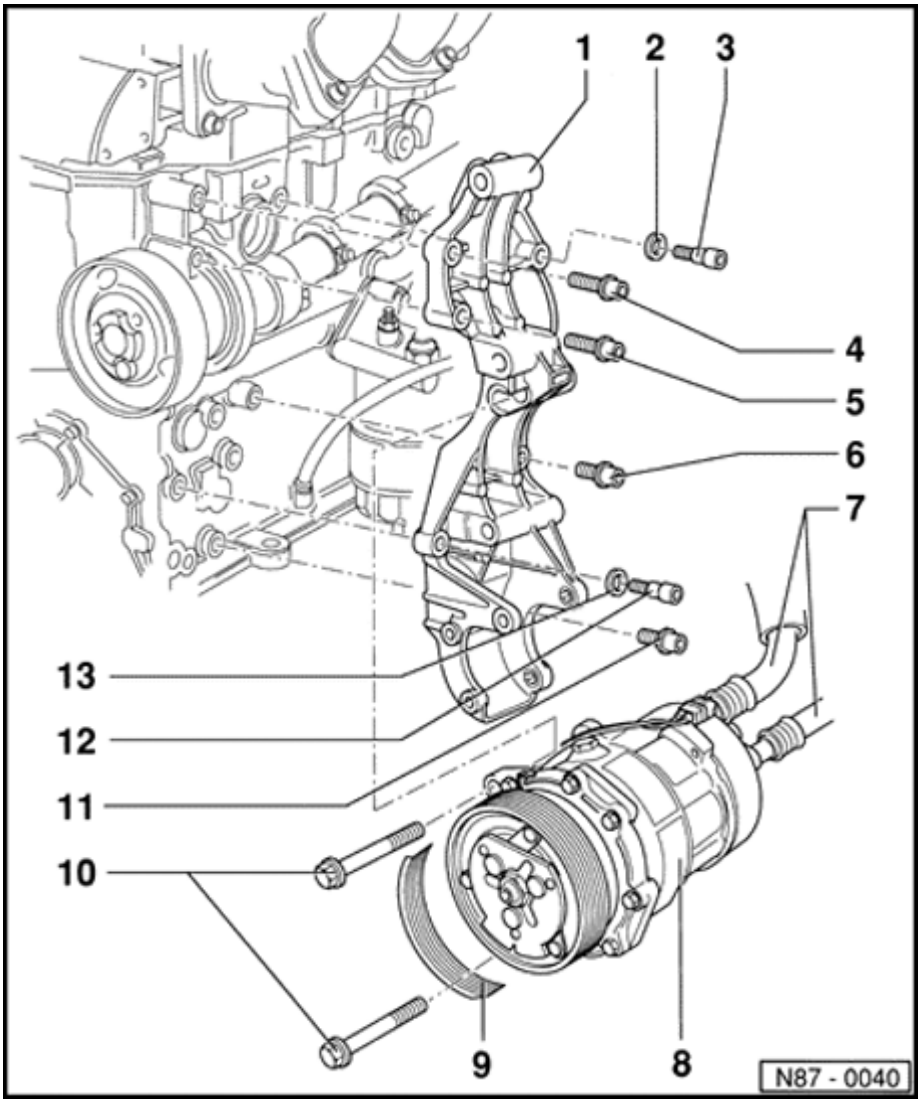

9 - Ribbed belts

- Removal and installing

⇒ *Repair Manual, 2.8 Liter VR6 2V Engine Mechanical, Engine Code(s): AAA, Repair Group 13*

10 - Hex bolt M10x112

- 45 Nm (33 ft. lb)

11 - Socket head combi-bolt M8x30

- 25 Nm (18 ft. lb)

12 - Fitted bolt M8x20

- 25 Nm (18 ft. lb)

13 - Washer 8.4x16x1.6

A/C refrigerant system

A/C refrigerant system, identification

Note:

Before carrying out any work on the A/C refrigerant system, refer to A/C system safety measures ⇒ *Page 87-1* .

A/C refrigerant systems on Passat models are charged with refrigerant R-134a.

Labels specifying refrigerant type are located on the compressor or radiator support. Before proceeding with refrigerant system servicing or repairs, always confirm refrigerant type used.

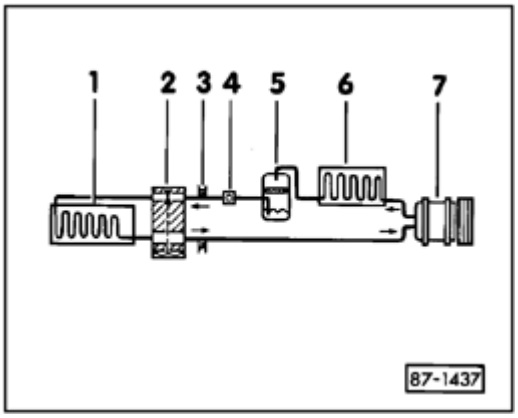

A/C refrigerant circuit with expansion valve and receiver drier

1 - Evaporator

2 - Expansion valve

3 - Service valve

4 - Sight glass

5 - Receiver drier

6 - Condenser

7 - Compressor

87-63

A/C refrigerant system, component overview

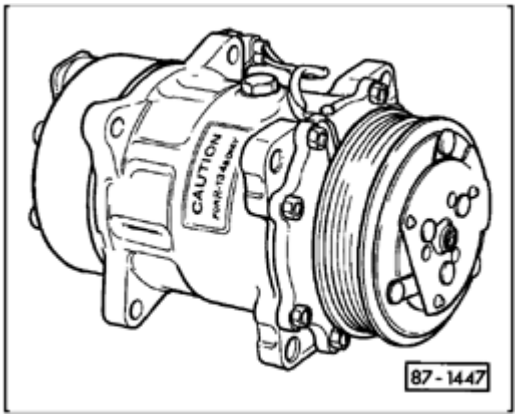

Compressor

The compressor is driven via a belt on the engine when power is applied to the the A/C clutch -N25- (A/C "ON").

Low-pressure refrigerant gas from the evaporator is compressed by the compressor. After compression, the refrigerant gas (now high-pressure) flows to the condenser.

Notes:

- *The compressor contains refrigerant oil that is mixable under all temperatures with the refrigerant.*
- *A label on the compressor indicates that compressor is for R-134a systems only.*

87-64

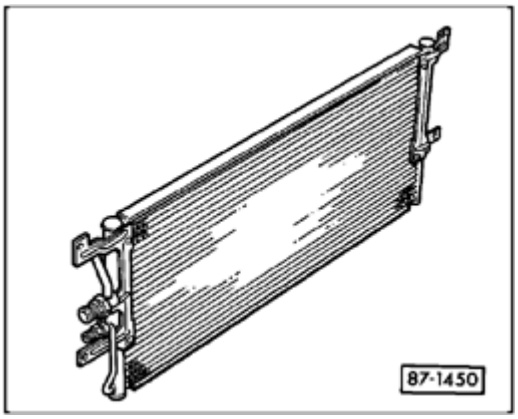

Condenser

The condenser transfers heat from the compressed refrigerant gas to the outside air which causes the refrigerant to change state from a gas to a liquid.

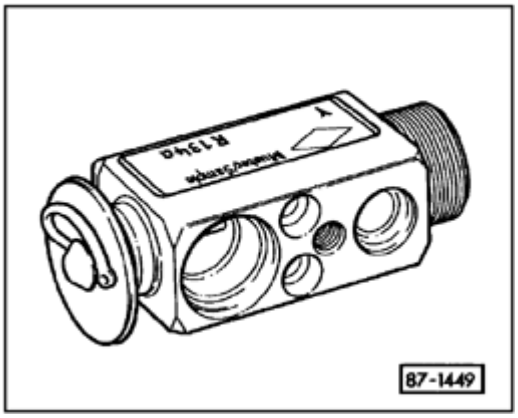

Expansion valve

The expansion valve restricts and controls refrigerant flow to the evaporator thus lowering refrigerant temperature and pressure.

Upstream of the expansion valve, the refrigerant is hot and under high pressure. Downstream of the expansion valve, the refrigerant is cold and under low pressure.

87-65

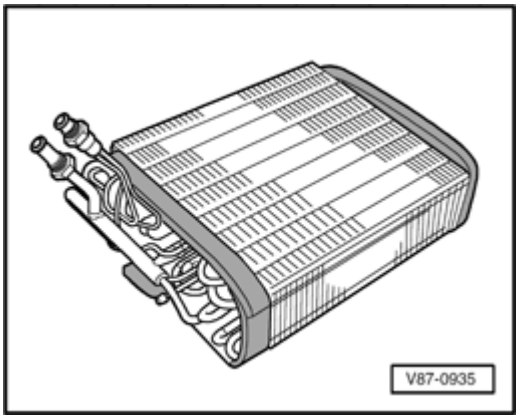

Evaporator

Liquid refrigerant entering the evaporator absorbs heat from air passing through the evaporator fins and cools the air. As the refrigerant absorbs heat it turns to vapor and then is suctioned by the compressor.

A/C system hoses and lines

The mixture of refrigerant oil (PAG oil) and refrigerant R-134a attacks some metals and alloys (for example, copper) and breaks down certain hose material. Where applicable, hoses and lines may be identified with a green mark (stripe) or the lettering "R-134a".

Hoses and lines are fastened together with threaded couplings/fittings and are retained (to bodywork or components) with specially isolated hose clamps.

Notes:

- *During servicing, all couplings, fittings and related fasteners must be torqued to specifications* ⇒ *Page 87-69* .
- *Ensure that only special tools (as specified) are used while servicing.*

87-66

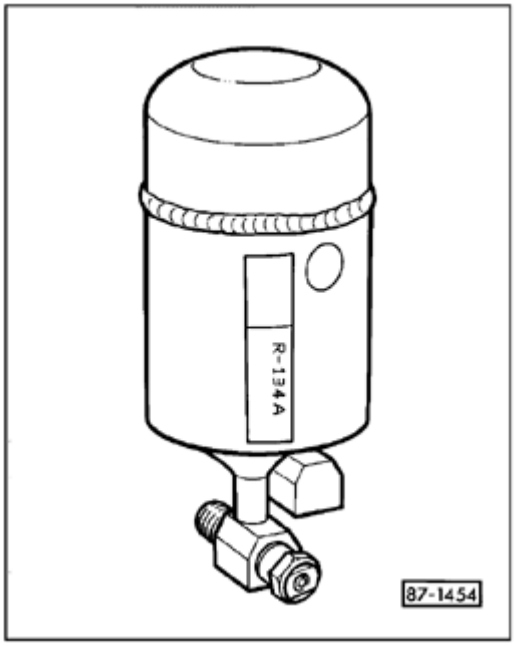

Receiver drier

The receiver drier accumulator acts as a refrigerant reservoir for the system. Any moisture in the refrigerant system is absorbed by drier desiccantr.

Note:

Replace the receiver drier each time the refrigerant circuit is opened.

CAUTION!

The receiver drier may be identified with a green R-134a label and MUST NOT be used in R-1 systems (the drier desiccant inside is only compatible with R-134a refrigerant). Likewise, NEVER use an R-1 receiver drier in an R-134a system.

87-67

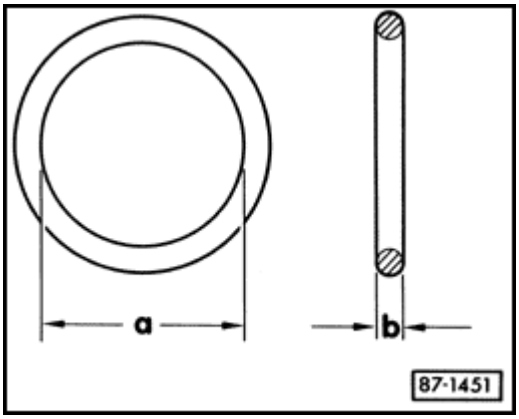

O-rings

O-rings seal connections between A/C system components.

Notes:

- *Always use correct size O-rings (dimensions -a- and -b-).*
- *Do not reuse O-rings, always replace. Use only new O-rings that are compatible with R-134a refrigerant and refrigerant (PAG) oil on R-134a systems.*
- *Lubricate O-rings with the appropriate refrigerant oil before installing (only use PAG oil).*

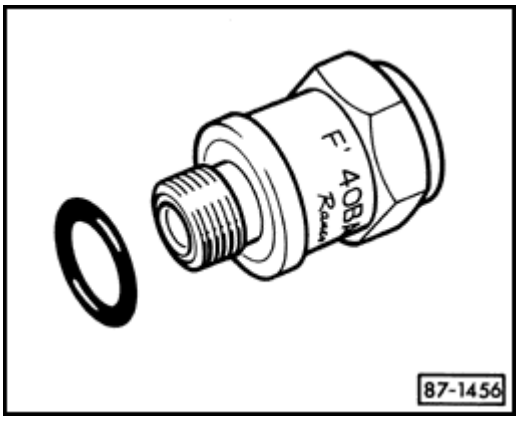

Pressure relief valve

The pressure relief valve is mounted on the compressor or compressor inlet/outlet manifold. At pressures above 40 bar (580 psi), the pressure relief valve opens to vent excessive pressure. When the system pressure is reduced, the valve closes to prevent total refrigerant loss.

On some models, a cap on the pressure relief valve will pop out if the valve has opened.

87-68

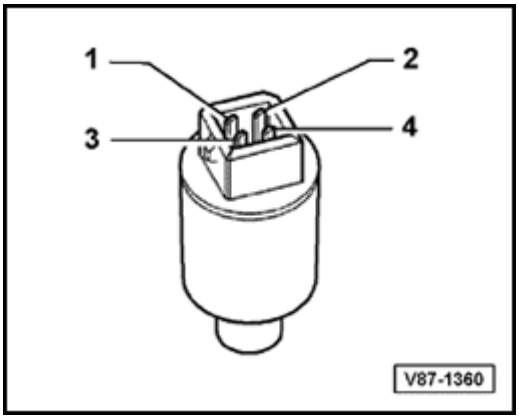

A/C pressure switch -F129-

The A/C pressure switch is a combination switch (two switching components) that protects refrigerant circuit components from malfunctioning due to excessive or insufficient refrigerant system pressures.

- Switch part between terminals 1 and 2 switches off the A/C clutch -N25- when the system pressure is too high or when there is not enough refrigerant in the system .
- Switch part between terminals 3 and 4 switches coolant fan -V7- to the next higher fan speed when system pressures increase.

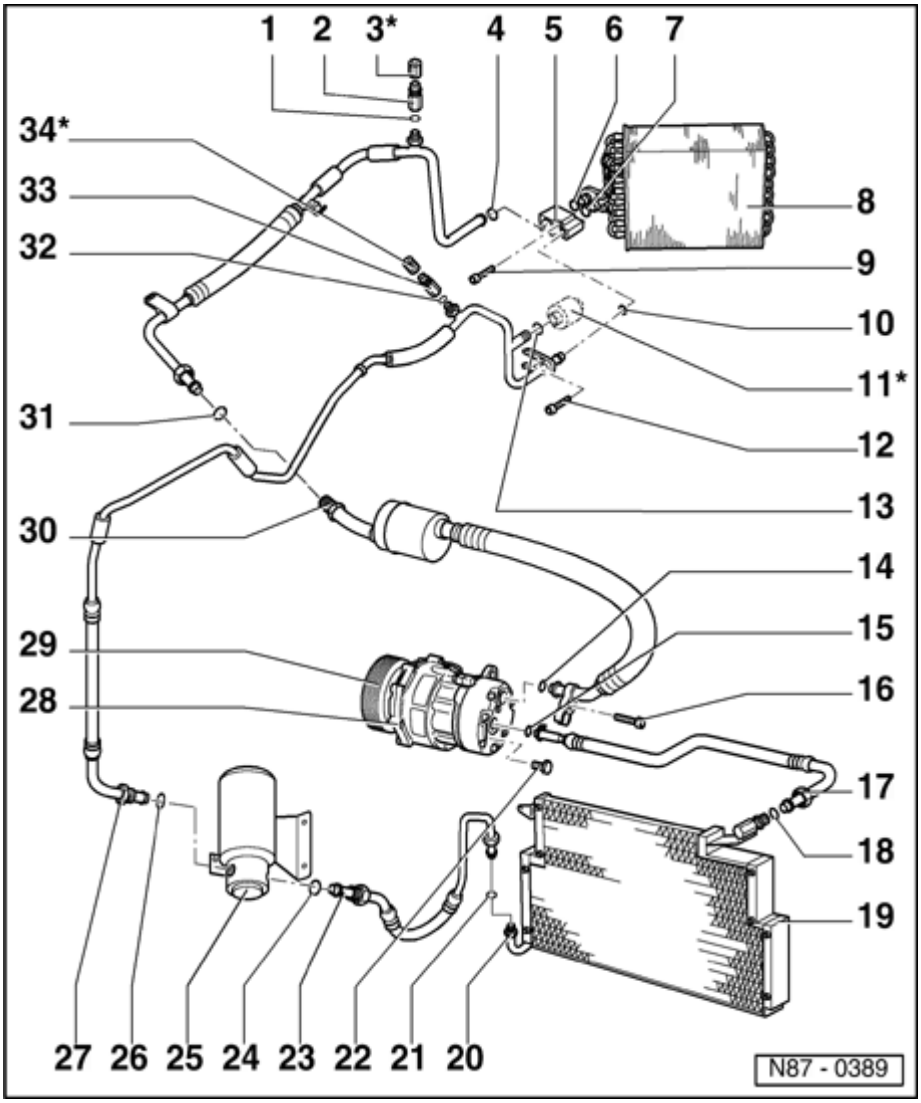

A/C refrigerant system, servicing

Notes:

- *Before carrying out any work on the A/C refrigerant system, refer to A/C refrigerant system safety measures ⇒ Page 87-1 .*
- *Service refrigerant system using ent More ACR 4 or equivalent.*
- *Only system components identified with an * can be serviced or replaced without discharging refrigerant system.*
- *During servicing, all couplings, fittings and related fasteners must be torqued to specifications.*

1 - O-ring

- 7.6 mm; 1.8mm

2 - Low pressure service valve

- Only use Kent Moore ACR4 or equivalent
- Removing and installing ⇒ Fig. 2 .
- Refrigerant system capacity ⇒ Page 87-114 .

3 - Cap*

87-70

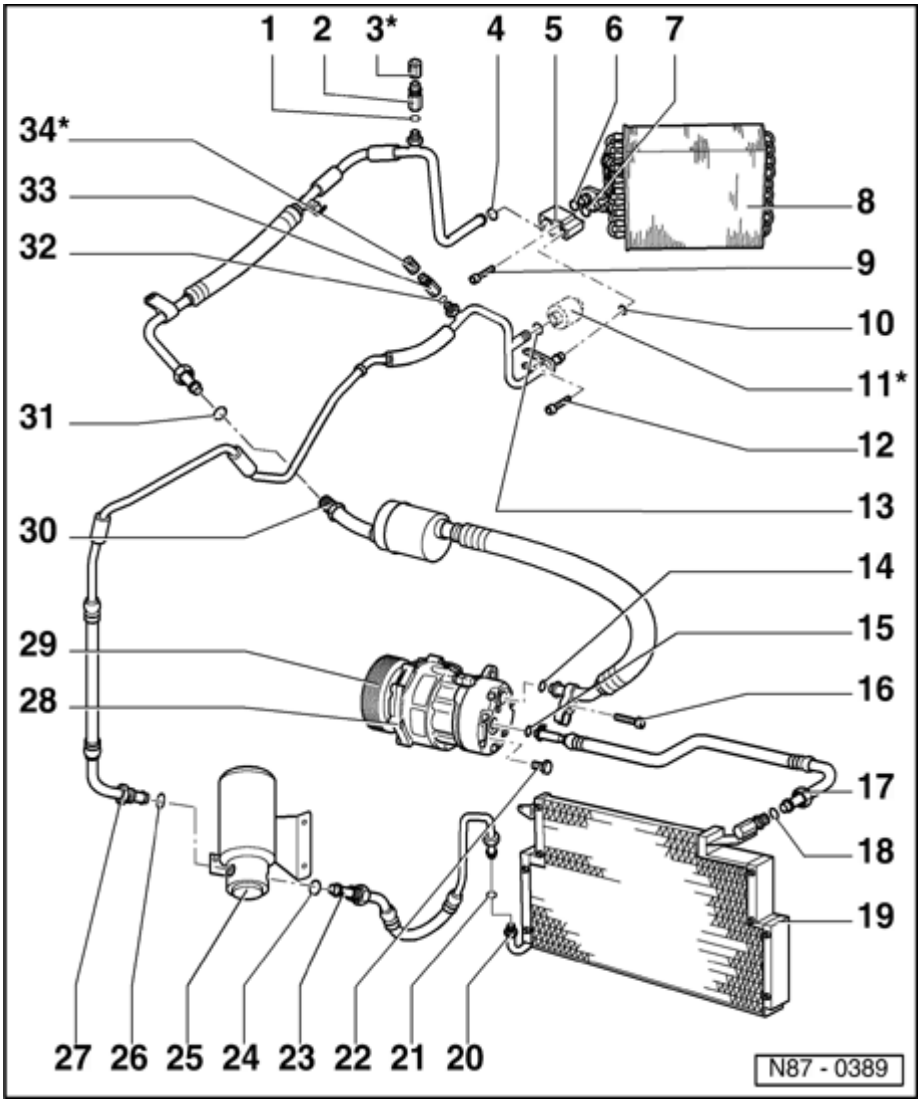

4 - O-ring

- 17.7 mm; 1.8mm

5 - Expansion valve

- In engine compartment at bulkhead, right
- Must be sealed against water spray.
- Removing ⇒ Page 87-79 .

6 - O-ring

- 14 mm; 1.8mm

7 - O-ring

- 10.8 mm; 1.8mm

8 - Evaporator

- In heating and a/c unit
- Removing ⇒ Page 87-84 .

9 - Bolt

- 7 Nm (62 in. lb.)

10 - O-ring

- 7.6 mm; 1.8mm

87-71

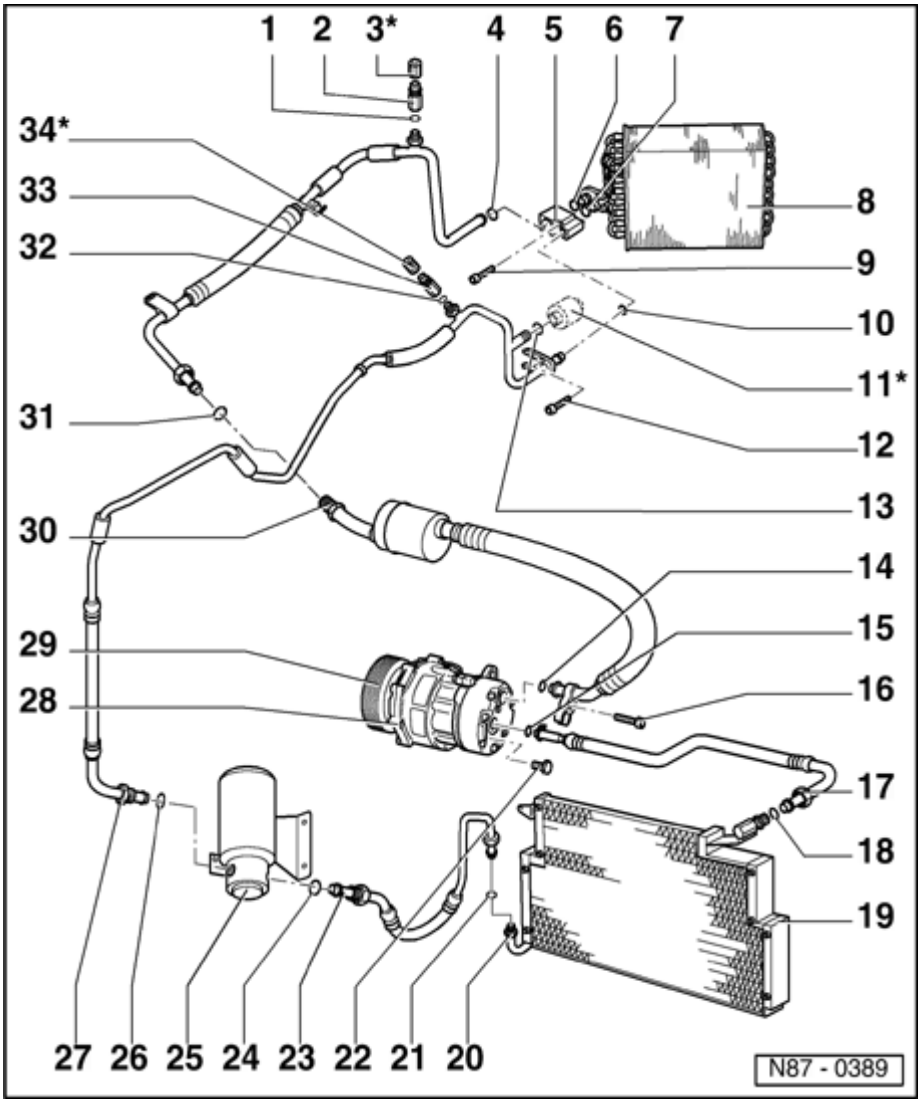

11 - A/C pressure switch - F129-*

- Checking -F129- ⇒ Fig. 3 .
- Removing and installing - tightening torque: 8 Nm (71 in. lb.)
- Component can be removed without discharging refrigerant system

12 - Bolt

- 7 Nm (62 in. lb.)

13 - O-ring

- 10.8 mm; 1.8mm

14 - O-ring

- 20.5 mm; 1.8mm

15 - O-ring

- 20.5 mm; 1.8mm

16 - Bolt

- 30 Nm (22 ft. lb.)

17 - Coupling

- Thread 3/4" - 16 UNF
- 35 Nm (26 ft. lb.)

18 - O-ring

- 10.8 mm; 1.8mm

87-72

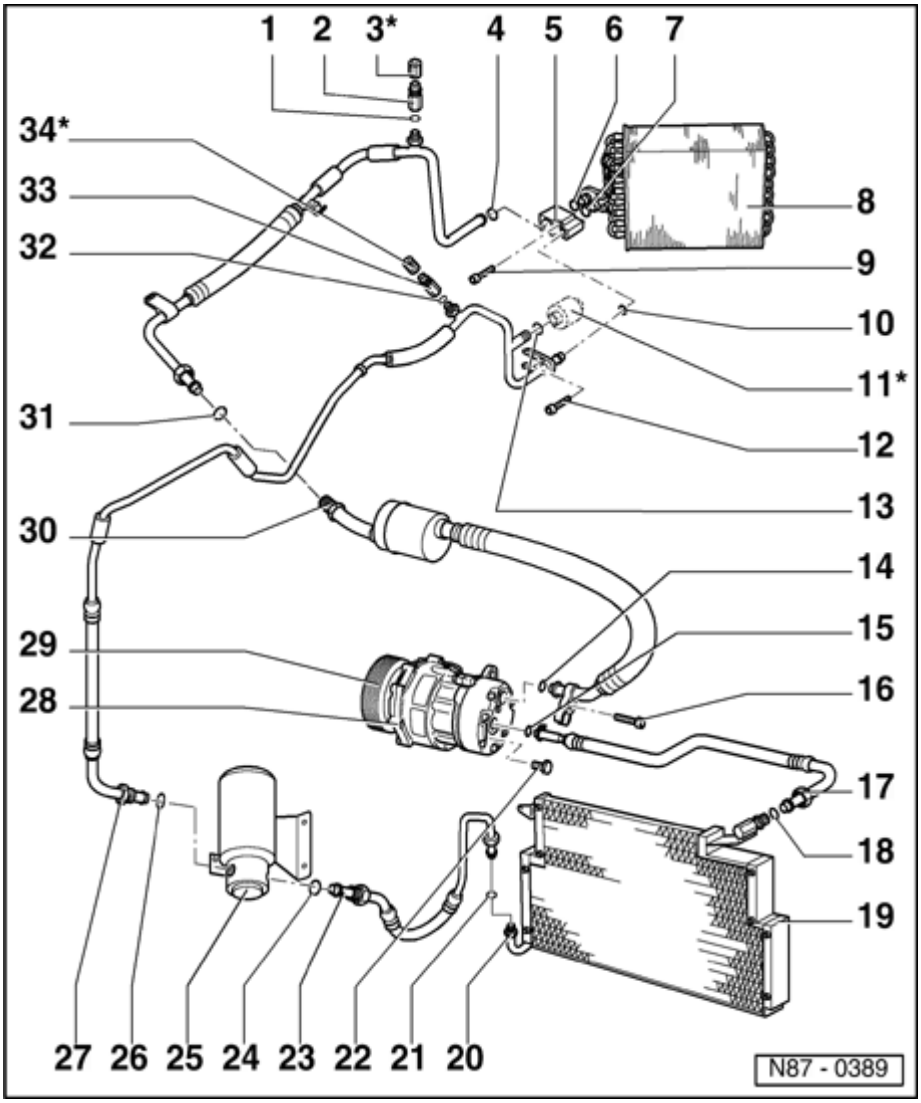

19 - Condenser

- Removing and installing ⇒ Page 87-81 .

20 - Coupling

- Thread 5/8" - 18 UNF
- 15 Nm (11 ft. lb.)

21 - O-ring

- 7.6 mm; 1.8mm

22 - Pressure relief valve

- On compressor
- Checking ⇒ Fig. 4 .

23 - Coupling

- Thread 3/4" - 16 UNF
- 15 Nm (11 ft. lb.)

24 - O-ring

- 10.8 mm; 1.8mm

25 - Receiver drier

- Function ⇒ Page 87-66 .

87-73

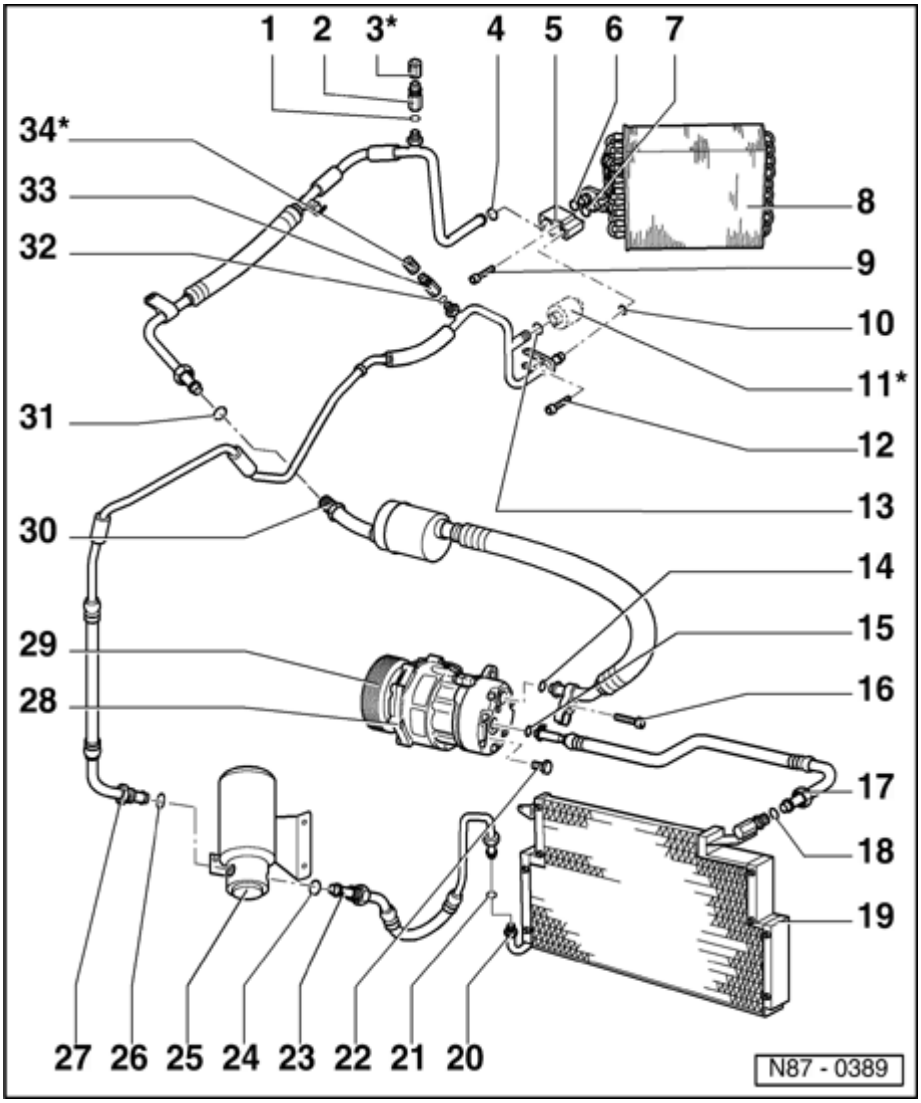

26 - O-ring

- 7.6 mm; 1.8mm

27 - Coupling

- Thread 5/8" - 18 UNF
- 15 Nm (11 ft. lb.)

28 - Compressor

- Sanden SD7-V16

29 - A/C clutch -N25-*

- Clutch assembly can be serviced without discharging refrigerant system.
- Servicing ⇒ Page 87-43 .

30 - Coupling

- Thread 7/8" - 14 UNF
- 30 Nm (22 ft. lb.)

87-74

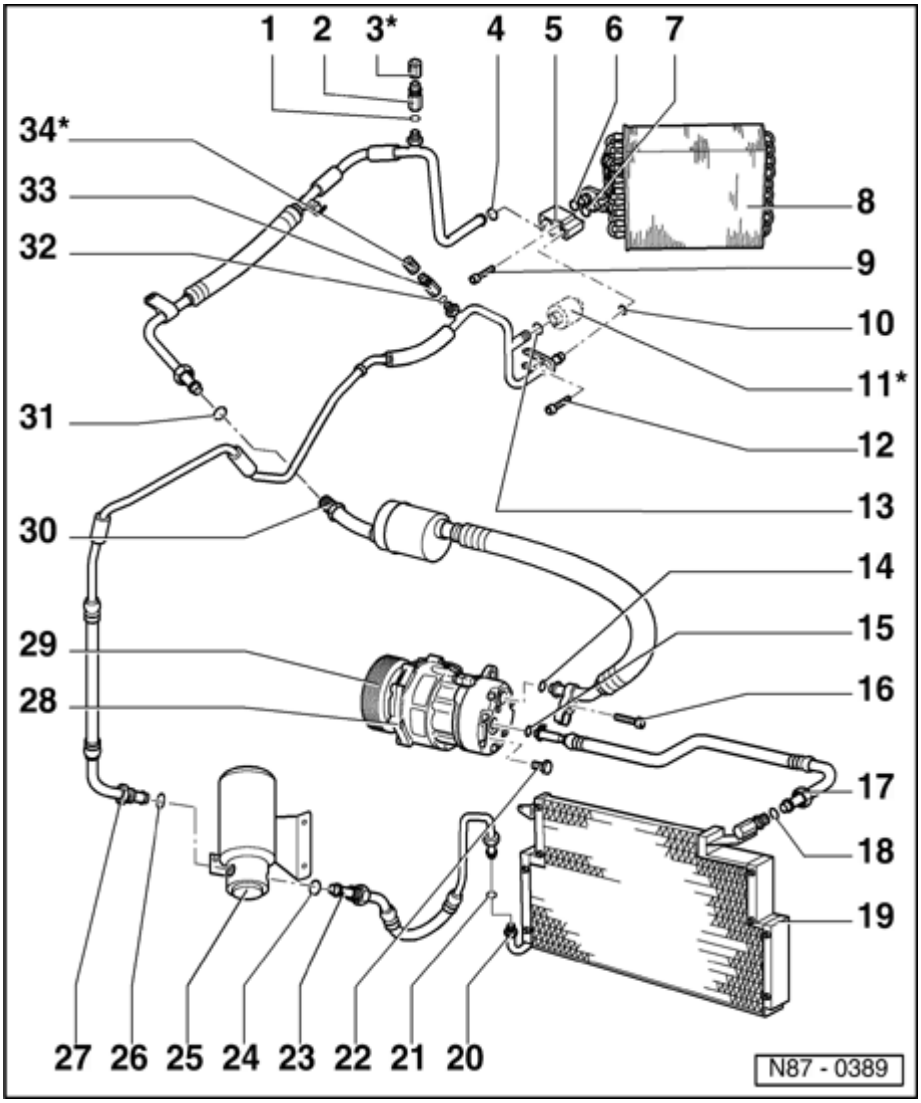

31 - O-ring

- 14 mm; 1.8mm

32 - O-ring

- 10.8 mm; 1.8mm

33 - High pressure service valve

- Only use Kent Moore ACR4 or equivalent
- Removing and installing ⇒ Fig. 1 .
- Refrigerant system capacity ⇒ Page 87-114 .

34 - Cap*

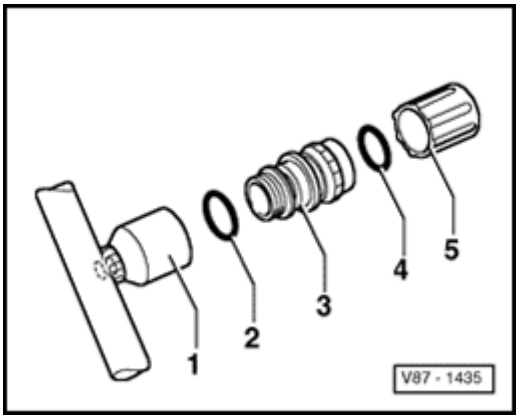

Fig. 1 High pressure service valve, removing

- Discharge refrigerant system ⇒ Page 87-96 .
- Unscrew and remove high pressure service valve -3-.

1 - Connection with internal thread

2 - O-ring, 10.8 mm; 1.8 mm

3 - High pressure service valve, with groove for O-ring and internal thread for cap

4 - O-ring, 10.8 mm; 1.8 mm

5 - Cap

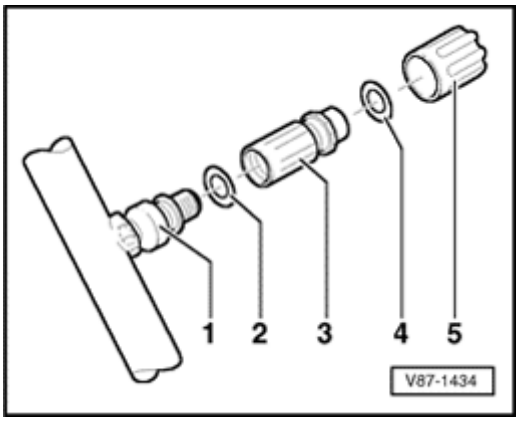

Fig. 2 Low pressure service valve, removing

- Discharge refrigerant system ⇒ Page 87-96 .
- Unscrew and remove low pressure service valve -3-.

1 - Connection with external thread and groove for O-ring

2 - O-ring, 7.6 mm; 1.8 mm

3 - Low pressure service valve

4 - O-ring, 7.6 mm; 1.8 mm

5 - Cap

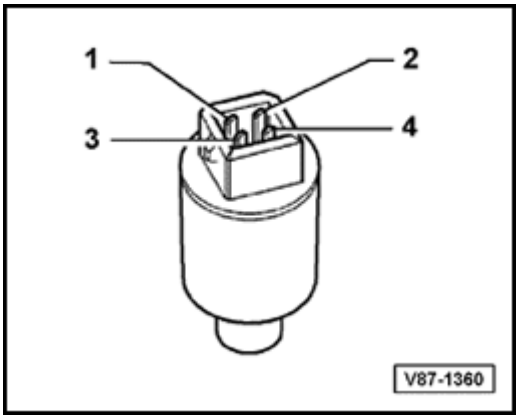

Fig. 3 A/C pressure switch -F129-, checking

- The pressure switch can be removed without discharging refrigerant system.
- Visually check that O-ring 10,8 mm x 1,8 mm is positioned correctly in the groove.

Function

Switch part between terminals 1 and 2 switches off the A/C clutch -N25- when the system pressure is too high or when there is not enough refrigerant in the system .

- Switch opens when the pressure is below 1.2 bar and closes again above 2.4 bar (switch point).
- Switch opens above 32 bar and closes again below 24 bar (switch point).

Switch part between terminals 3 and 4 switches coolant fan -V7- (via the coolant fan control module -J293-) to the next higher fan speed when system pressures increase.

- Switch closes above 16 bar and opens again below 12.5 bar (switch point).

Checking, continued ⇒ Page 87-77

87-77

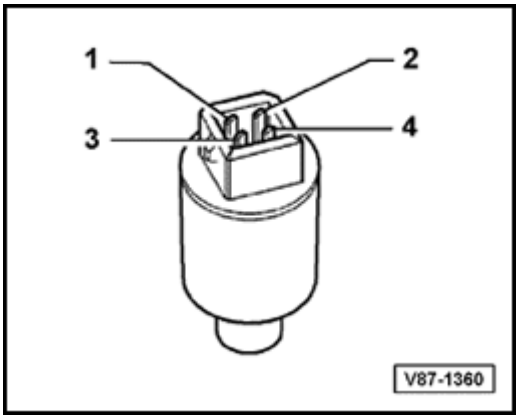

Checking:

- With the engine running, briefly bridge terminal 1 and 2 of connector. If the A/C clutch -N25- engages, the refrigerant circuit is empty.

-F129- functional checks

To determine proper A/C system performance, perform the following functional checks with the switch installed and connected.

- Check refrigerant capacity (fill). If system pressure is too low (refrigerant leakage), -F129- switches A/C clutch off.
- Check cooling fan function. When system pressure increases, -F129- causes coolant fan -V7- to switch to next higher fan speed.
- Check if A/C system switches off. At excessive system pressures (e.g.: caused by high ambient temperatures or if condensor is blocked), -F129- switches A/C clutch off.

87-78

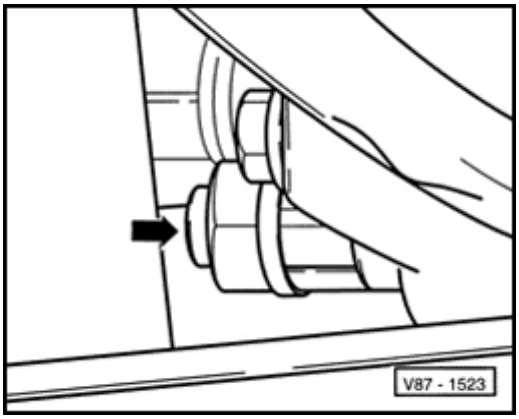

Fig. 4 Pressure relief valve, checking

- Function: Protects the refrigerant circuit from over-pressure.
- Refrigerant oil deposited on rear of compressor indicates pressure relief valve has opened to release pressure -arrow-. An adhesive plate is pushed out.

87-79

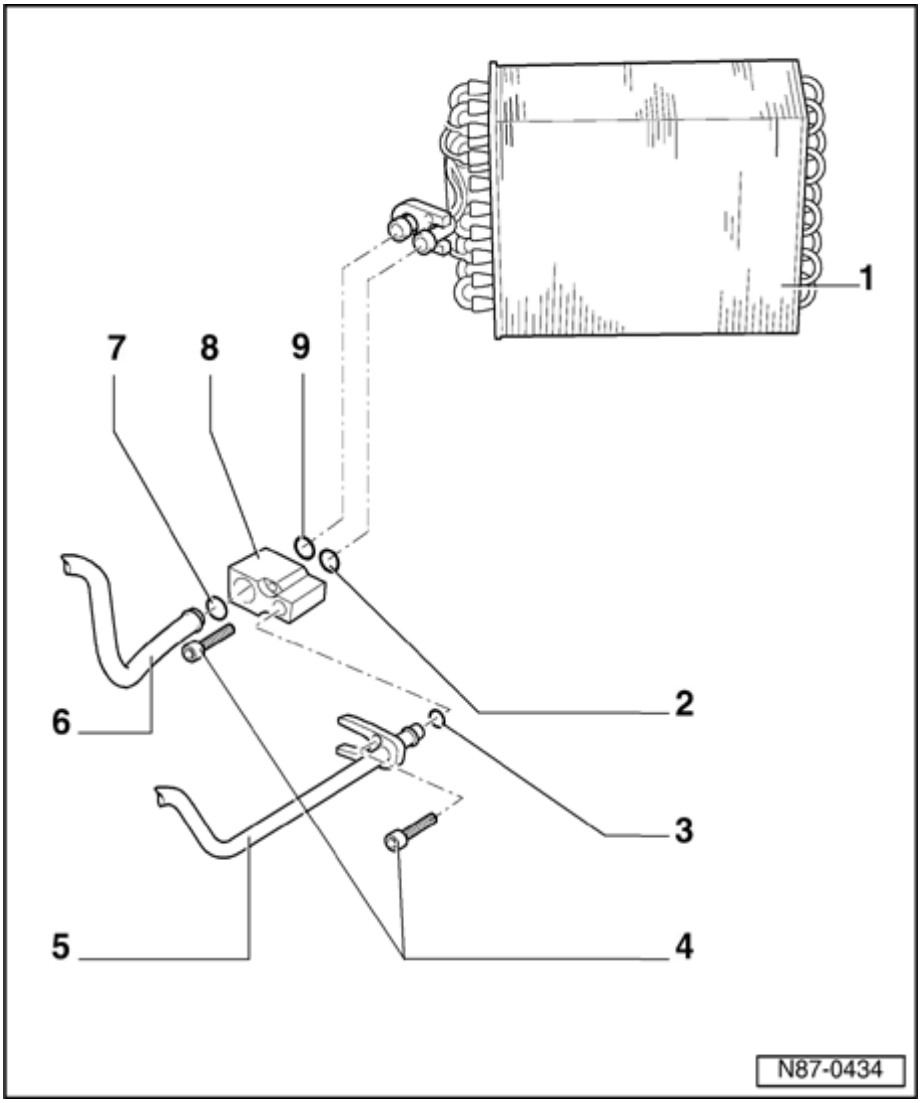

Expansion valve, removing

Notes:

- *Before carrying out any work on the A/C refrigerant system, refer to A/C refrigerant system safety measures ⇒ Page 87-1 .*
- *Service refrigerant system using ent More ACR 4 or equivalent.*
- *During servicing, all couplings, fittings and related fasteners must be torqued to specifications.*

1 - Evaporator

- In heating and a/c unit

2 - O-ring

- 10.8 mm; 1.8mm

3 - O-ring

- 7.6 mm; 1.8mm

4 - Bolt

- 7 Nm (62 in. lb.)
- Qty.: 2

5 - Refrigerant hose

- From receiver drier to expansion valve

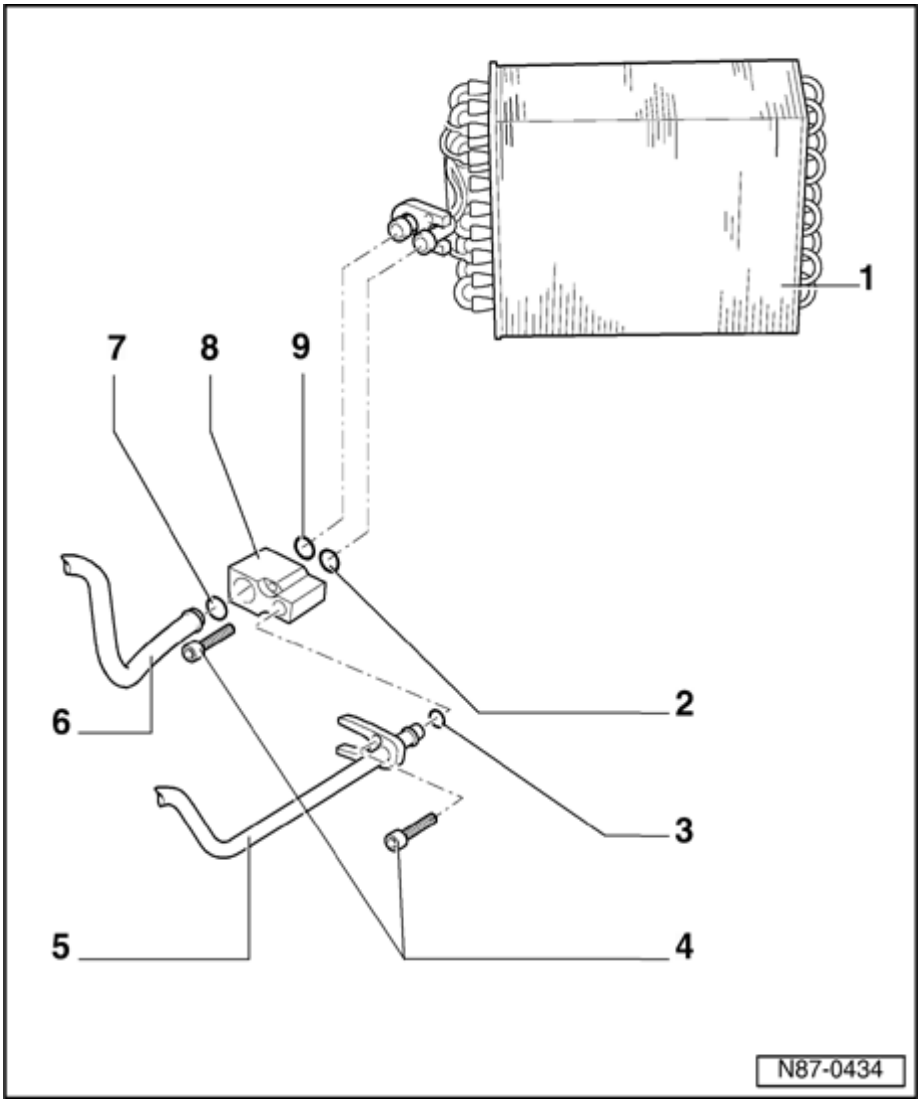

6 - Refrigerant hose

- From expansion valve to compressor
- With dampener

7 - O-ring

- 16.7 mm; 1.8mm

8 - Expansion valve

- In engine compartment at bulkhead, right
- Must be sealed against water spray.
- Checking insulation piece for expansion valve ⇒ Page 87-38 .

Removing:

- First discharge refrigerant circuit ⇒ Page 87-96 .
- Remove bolts -4-
- Pull out refrigerant hoses -5- and -6-.
- Replace O-rings -3- and -7-
- Pull out expansion valve -8-
- Replace O-rings -2- and -9-

9 - O-ring

- 14 mm; 1.8mm

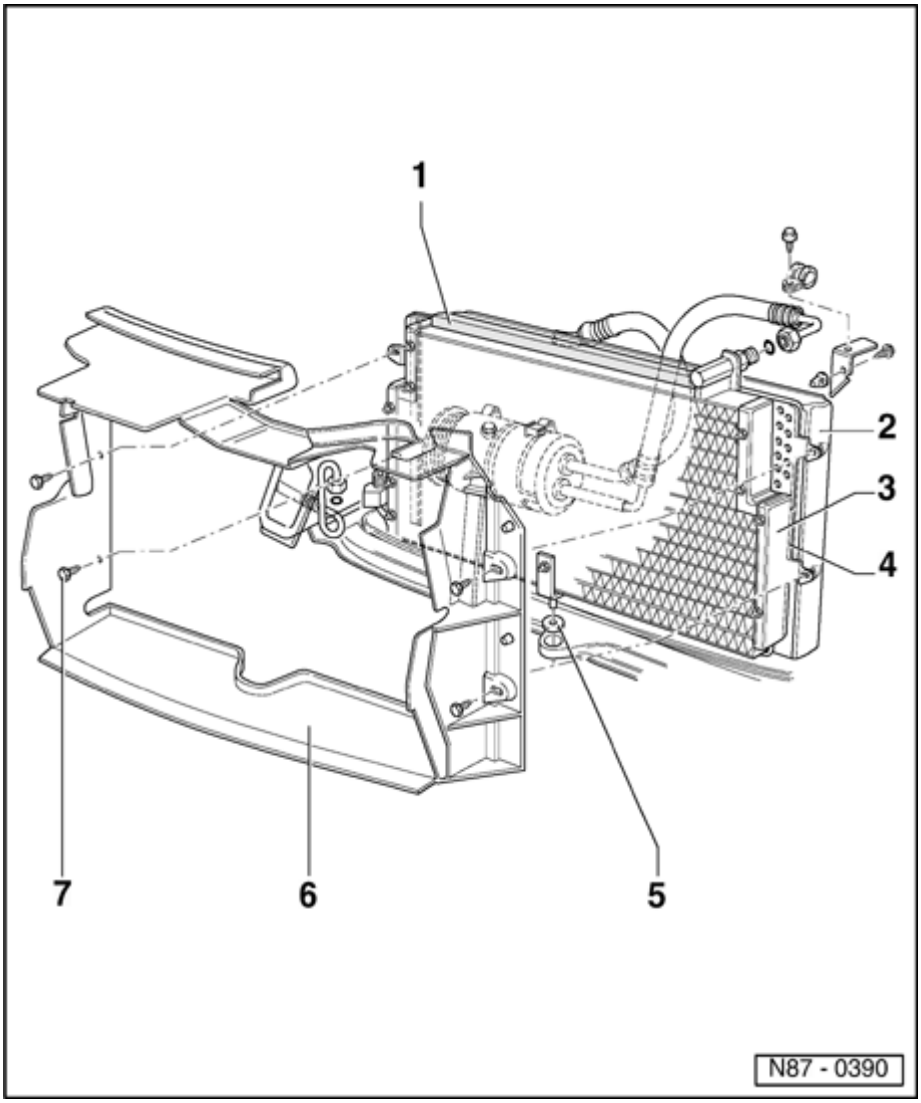

Condensor, removing

CAUTION!

Before beginning repairs on the electrical system:

- ***Obtain the anti-theft radio security code.***
- ***Switch the ignition off.***
- ***Disconnect the battery Ground (GND) strap.***
- ***After reconnecting battery, re-code and check operation of anti-theft radio. Also check operation of clock and power windows according to Repair Manual and/or Owner s Manual.***

Notes:

- *Before carrying out any work on the A/C refrigerant system, refer to A/C refrigerant system safety measures ⇒ Page 87-1 .*
- *Service refrigerant system using ent More ACR 4 or equivalent.*
- *During servicing, all couplings, fittings and related fasteners must be torqued to specifications.*

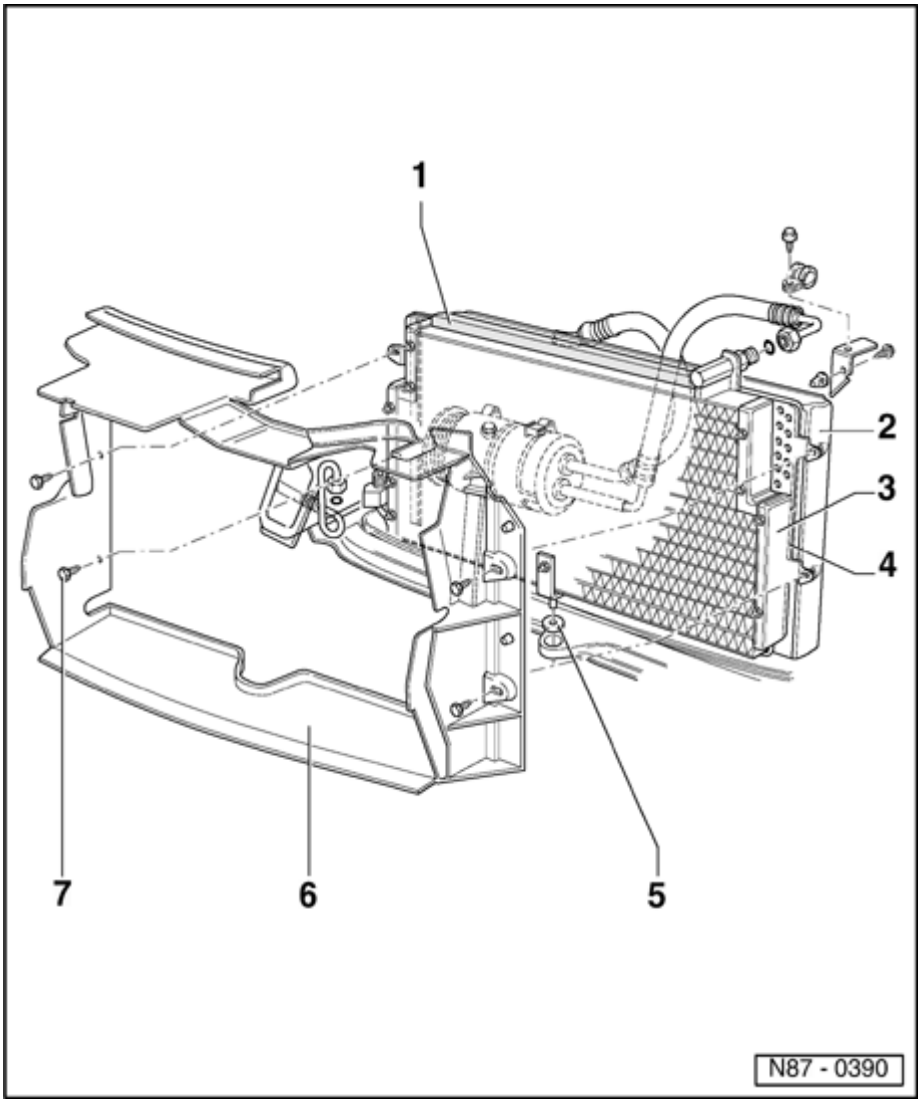

- Discharge refrigerant system ⇒ Page 87-96 .
- Remove front bumper ⇒ *Repair Manual, Body Exterior, Interior, Repair Group 63* .
- Bring front end assembly (lock carrier) into service position ⇒ *Repair Manual, Body Exterior, Interior, Repair Group 50* .
- Loosen and separate refrigerant pipes/couplings from evaporator.

CAUTION!

Immediately plug open connections on A/C components and lines to prevent dirt and moisture contamination.

1 - Foam gasket

- 480 mm long
- Secure with adhesive prior to installation

2 - Radiator

3 - Condensor

87-83

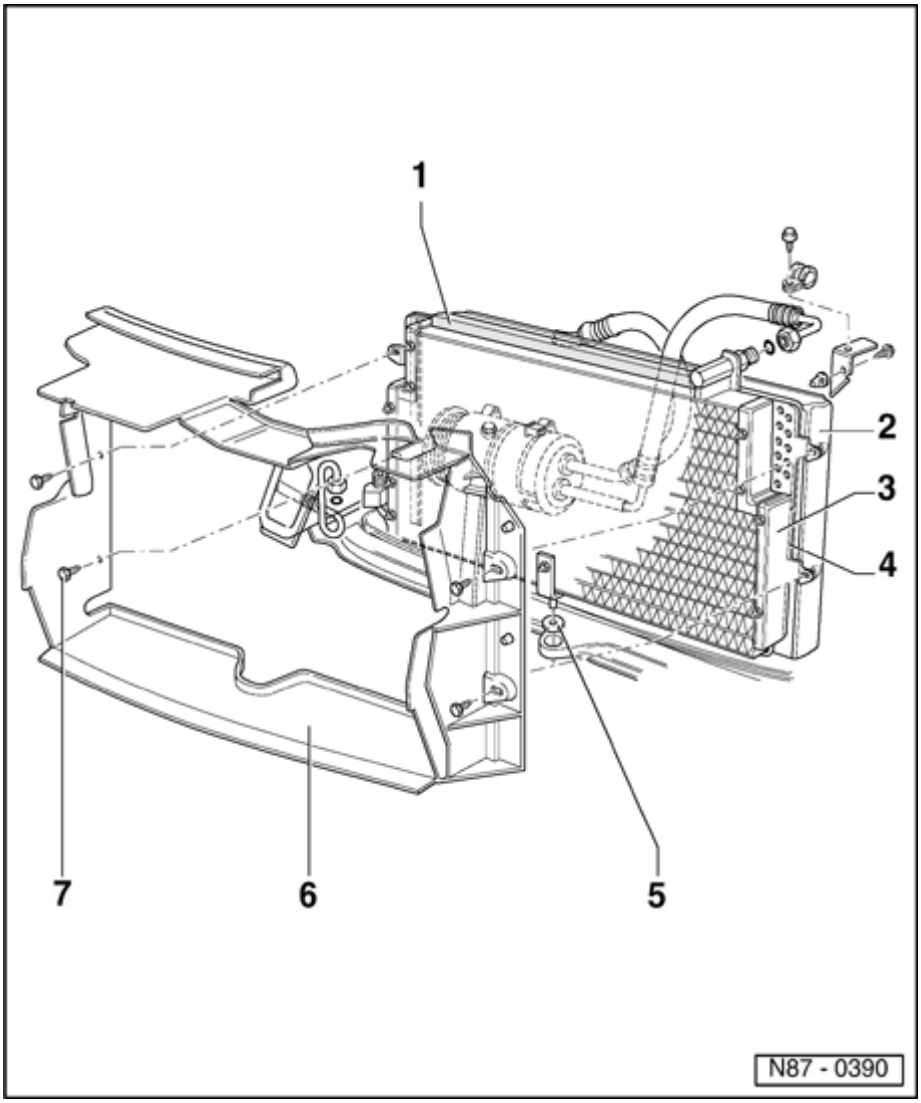

4 - Foam gasket

- 480 mm long
- Secure with adhesive prior to installation

5 - Rubber grommet

6 - Air guide

7 - Screw

- Qty.: 4

87-84

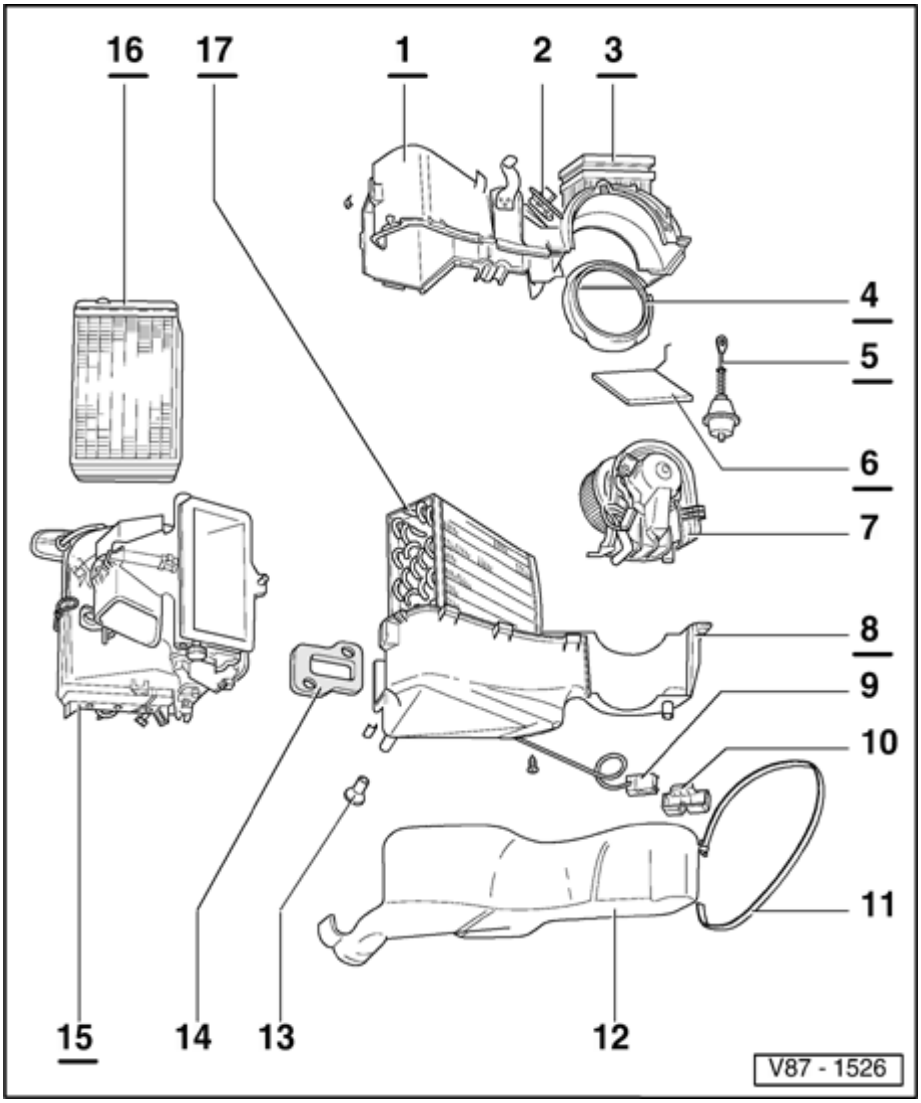

Heating and A/C unit, removing and assembly

CAUTION!

Before beginning repairs on the electrical system:

- ***Obtain the anti-theft radio security code.***
- ***Switch the ignition off.***
- ***Disconnect the battery Ground (GND) strap.***
- ***After reconnecting battery, re-code and check operation of anti-theft radio. Also check operation of clock and power windows according to Repair Manual and/or Owner s Manual.***

Notes:

- *Before carrying out any work on the A/C refrigerant system, refer to A/C refrigerant system safety measures ⇒ Page 87-1 .*
- *Service refrigerant system using ent More ACR 4 or equivalent.*
- *During servicing, all couplings, fittings and related fasteners must be torqued to specifications.*

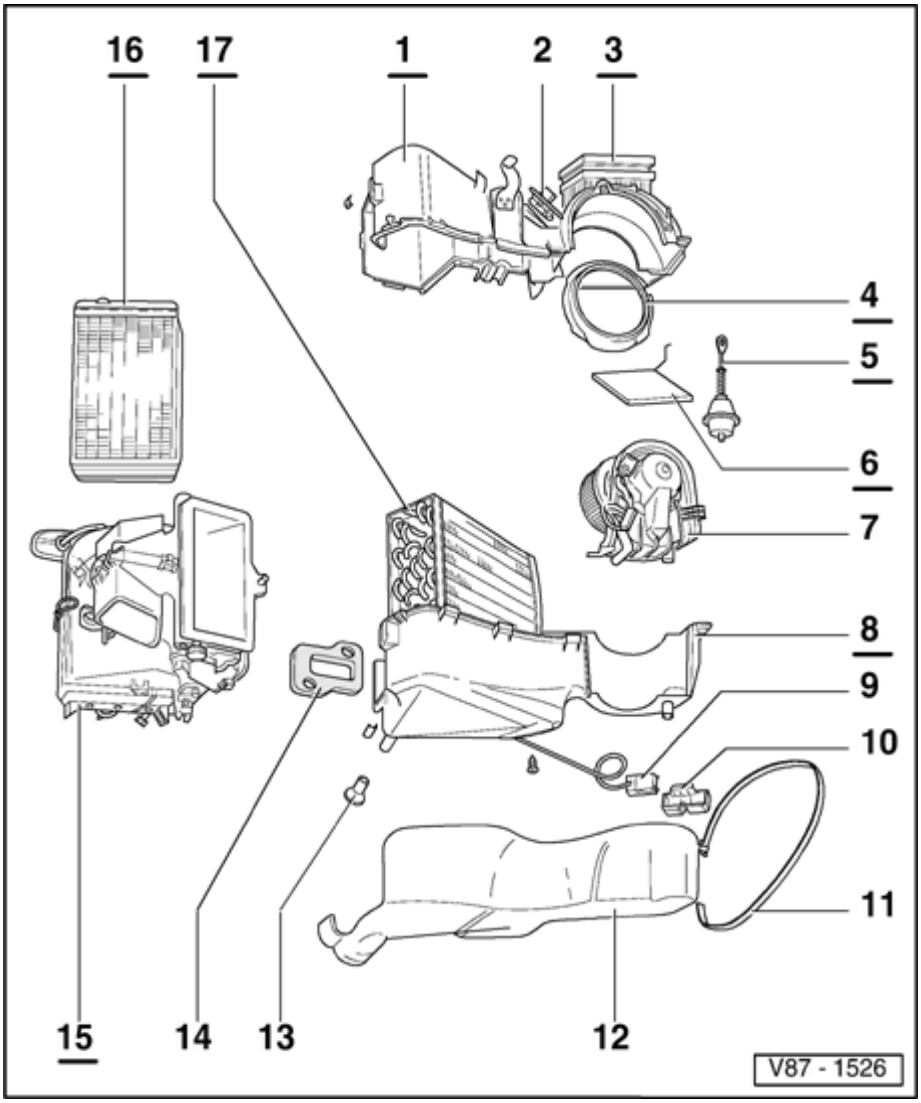

Removing

- Discharge refrigerant system ⇒ Page 87-96 .
- Drain cooling system Repair Manual, Engine Mechanical, Repair Group 19.

CAUTION!

The cooling system is pressuri ed when the engine is warm. Wear gloves and other protection and carefully release system pressure if necessary, before performing repairs.

- Clamp off and disconnect coolant hoses to heater core
- Remove refrigerant lines to evaporator.

CAUTION!

Immediately plug open connections on A/C components and lines to prevent dirt and moisture contamination.

87-86

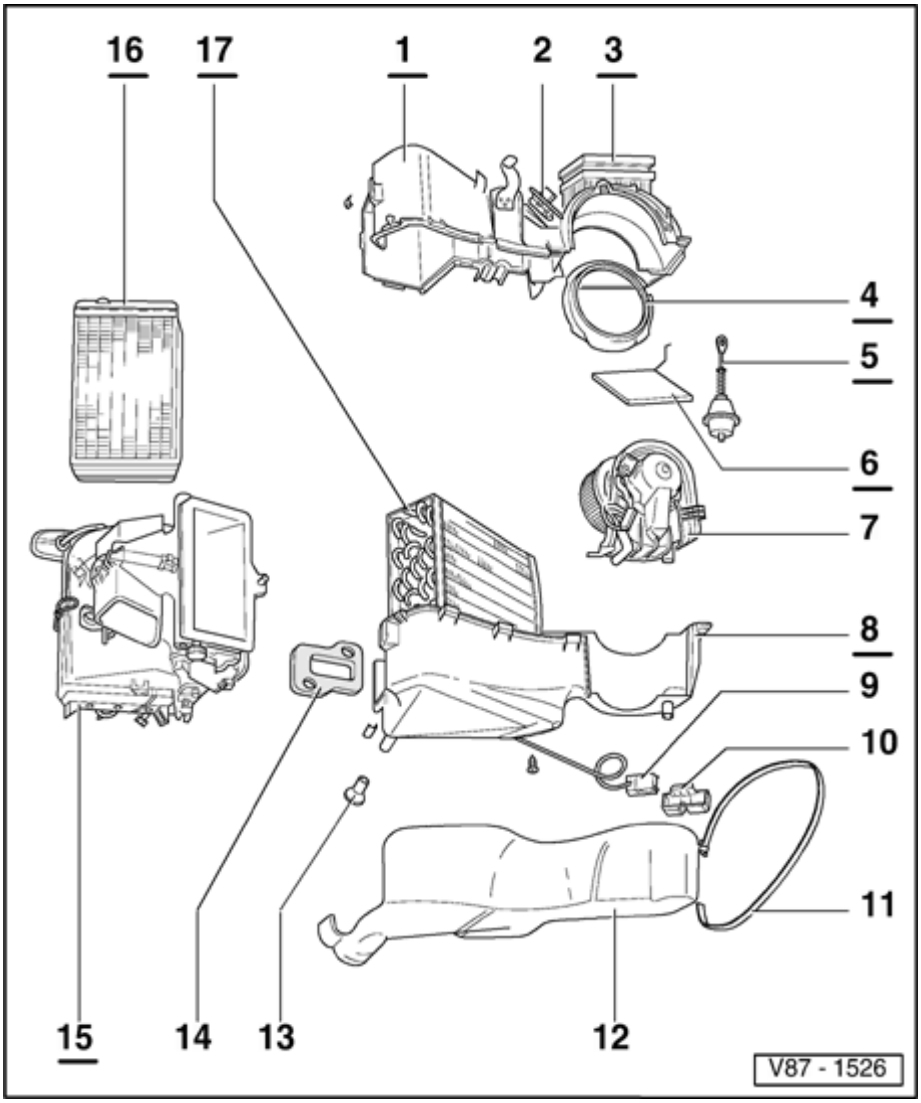

- Remove instrument panel Repair Manual, Body Interior, Repair Group 70.
- Locate and remove heating and A/C unit fasteners at bulkhead.
- Remove heating and A/C unit.

Assembly

1 - Housing, upper part

- Separate upper and lower housing sections by removing clips.
- Coat fitted surface of housing with AMV 176 000 06 (or equivalent) prior to assembly.

2 - Fresh Air Blower Series Resistance with Fuse -N24-

3 - Gasket

4 - Intake guide

5 - Vacuum unit for fresh/recirculating air flap

- Ventilated: Fresh air operation
- Vacuum hose layout ⇒ Page 87-40 .

6 - Fresh/recirculation air flap

7 - Fresh air fan -V2-

87-87

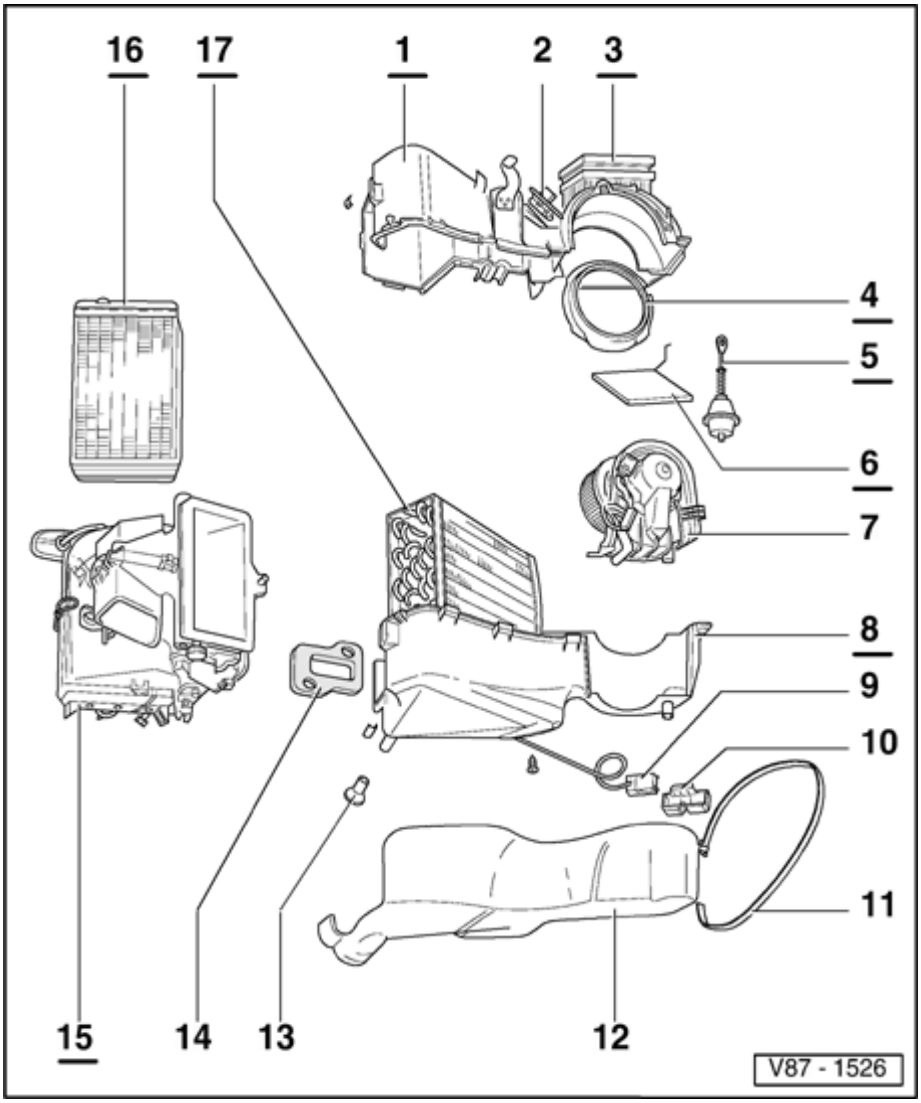

8 - Housing, lower part

- Separate upper and lower housing sections by removing clips.
- Coat fitted surface of housing with AMV 176 000 06 (or equivalent) prior to assembly.

9 - A/C Evaporator Temperature Switch - E33-

- Ensure temperature probe is inserted in evaporator to depth of 330 mm (13 in.)
- Prevents evaporator icing
- Switching temperature: opens at -2 degrees C and lower.

10 - Cap

- Where applicable

11 - Clamping band

87-88

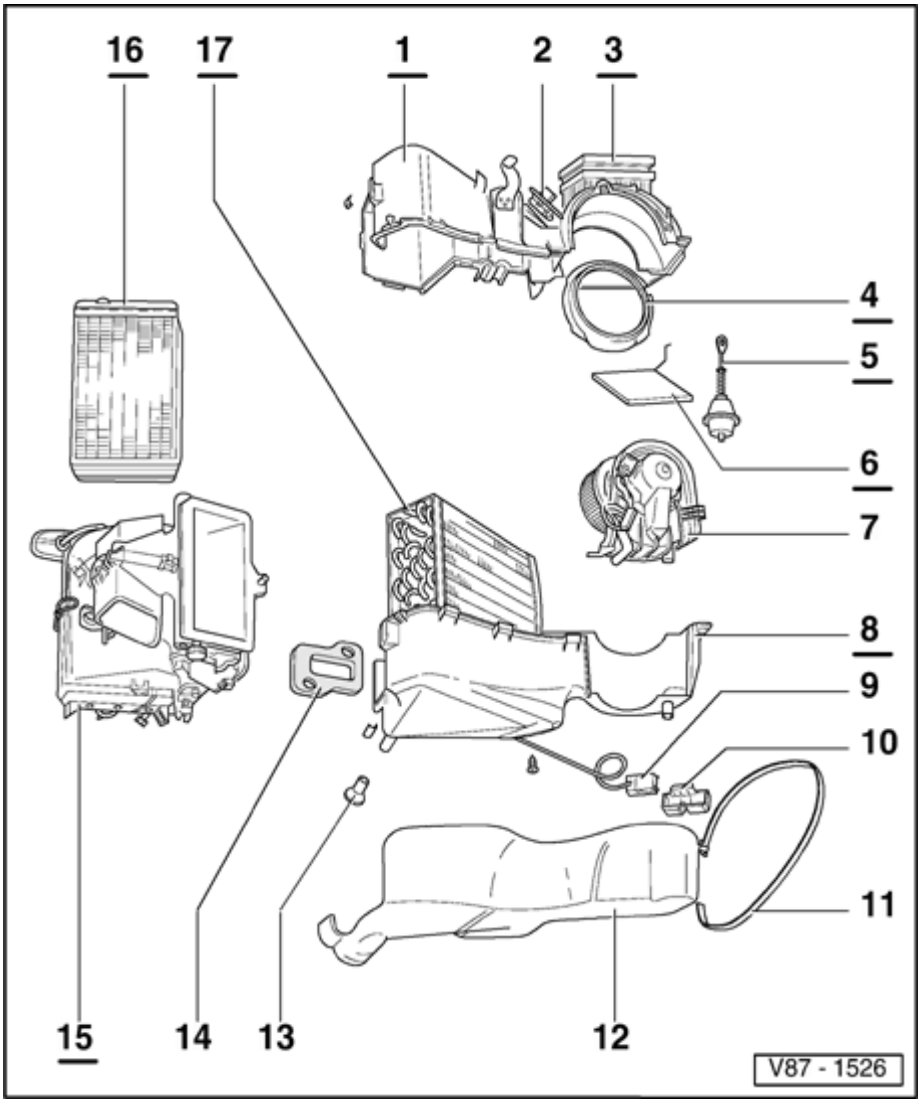

12 - Lower trim cover

13 - Evaporator water drain

14 - Gasket

15 - Air distribution housing

- Air flaps are not serviceable.

16 - Heater core

- Gaskets must be bonded gap-free all around.
- If retaining tabs do not engage when assembling, secure heat exchanger with screws.
- Always replace coolant after replacement.

17 - Evaporator

A/C refrigerant system, replacing components

Replacement A/C compressors, evaporators and condensers supplied by the Parts Dept. are filled with Nitrogen. If gas (Nitrogen) does not escape when component is first opened, the component may be faulty (leaking), do not install.

Replacement A/C compressors are filled with the total refrigerant oil quantity needed for the entire refrigerant system.

Always replace the receiver drier whenever the refrigerant system has been left open. Install immediately after opening to prevent moisture contamination of drier desiccant. Moreover, keep refrigerant system and other replacement components sealed for as long as possible to minimize the chance of dirt and moisture contamination.

Always plug open refrigerant line connections to prevent dirt and moisture contamination.

If the system has been discharged due to a damaged or leaking component (refrigerant hose/line, compressor, evaporator, condenser, etc.), flush the refrigerant system first with compressed air, then with nitrogen (available locally) and collect the oil that runs out. This will remove the refrigerant oil which may be saturated with moisture.

87-90

CAUTION!

DO NOT flush R-134a refrigerant system with R-11. R-11 is not compatible with refrigerant R-134a and PAG oil and will cause total system contamination.

If the compressor is not replaced after flushing the system, fill compressor with the correct type and quantity of refrigerant oil as specified under A/C system capacities ⇒ Page 87-114 . Fill compressor with the total system oil capacity.

If the compressor is replaced, do not add any additional oil as the total amount of oil required is already in the compressor.

Dispose of contaminated refrigerant oil following laws governing hazardous waste disposal. Do not combine any refrigerant oil with any other old oils such as engine oil or transmission fluid.

Follow all applicable Warnings and Cautions when working on the A/C system.

87-91

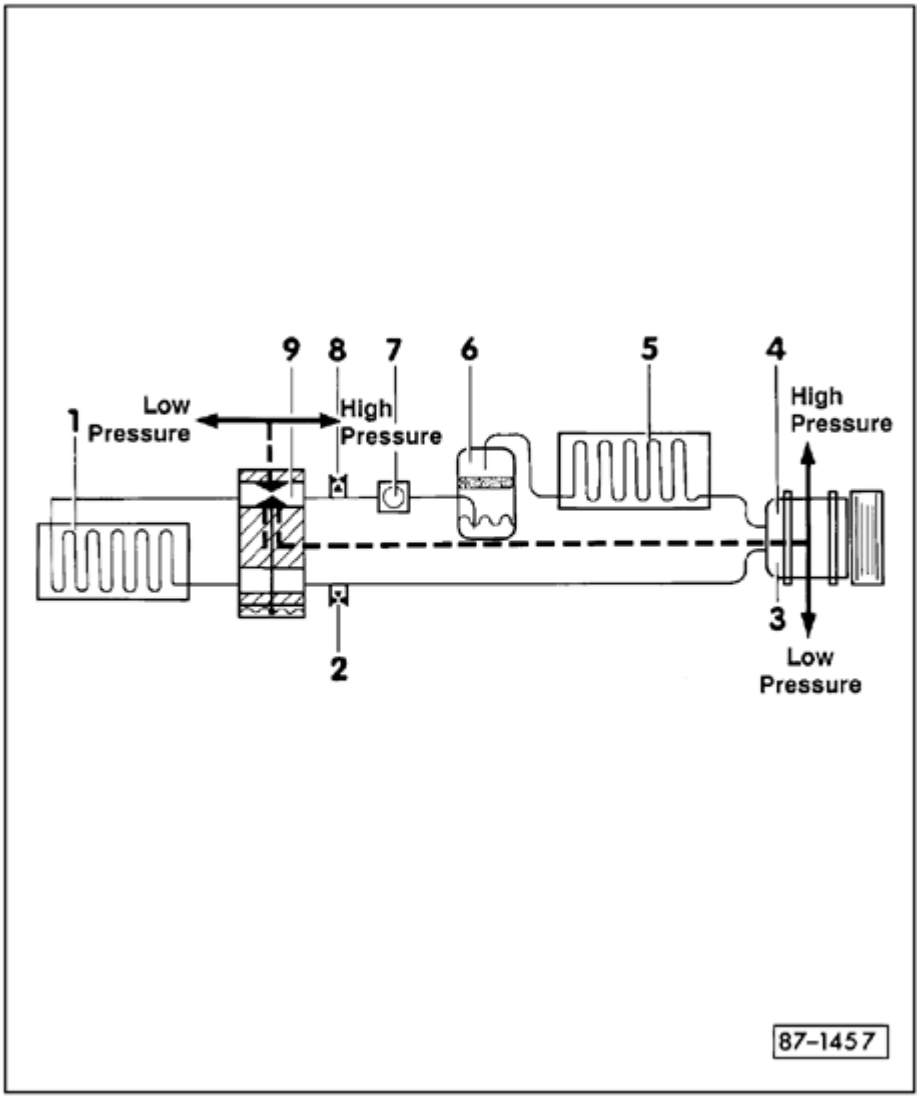

A/C refrigerant system pressures and temperatures, checking

The pressures and temperatures in the A/C system will vary depending on engine speed (RPM), coolant fan speed, engine coolant temperature, A/C clutch engagement, outside temperature, humidity, etc.

Pressure and temperature specifications are based on the following:

- Engine speed (RPM) at 1500
- Fresh air blower on high speed
- A/C adjusted to Max. cooling

Pressure and temperature specifications ⇒ Page 87-93 .

1 - Evaporator

2 - Low pressure service valve

3 - Compressor, low pressure side

4 - Compressor, high pressure side

5 - Condenser

87-92

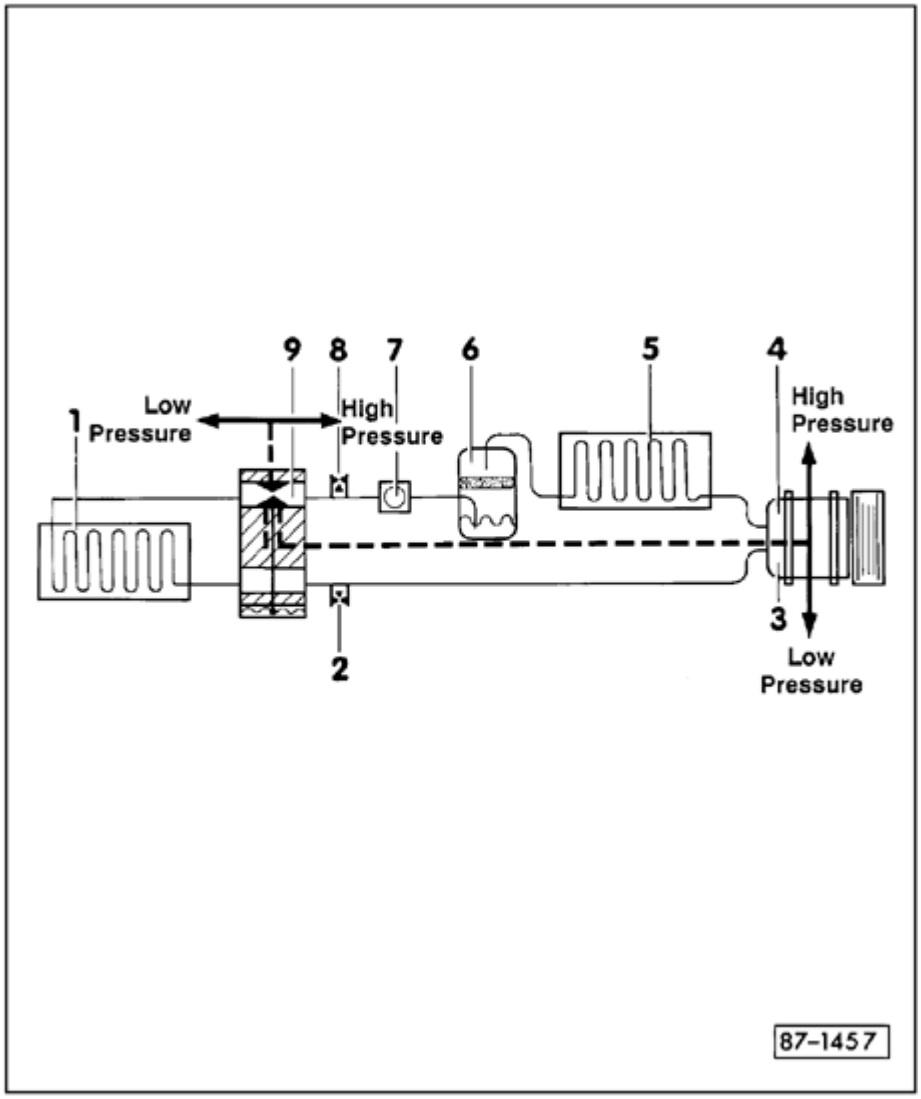

6 - Receiver drier

7 - Sight glass

- ♦ If equipped

8 - High pressure service valve

9 - Expansion valve

87-93

Pressure and temperature specifications

- Refer to pages ⇒ Page 87-91 and ⇒ Page 87-63 for component identification.

Component	Refrigerant state	Approximate pressure (bar/psi)	Approximate temperature
1 - Evaporator, inlet to outlet	Vapor to Gas		-7° C (19° F)[2]
2 - Low pressure service valve	Gas	1.2 bar (17.4 psi)[1]	-1° C (30° F)
3 - Compressor, low pressure side	Gas		
4 - Compressor, high pressure side	Gas		65° C (149° F)
5 - Condenser	Gas		
	to Vapor		55° C (131° F) at outlet
	to Liquid	14 bar (203 psi)	
6 - Receiver drier	Liquid		
7 - Sight glass (if equipped)	Liquid		55° C (131° F)
8 - High pressure service valve	Liquid		
9 - Expansion valve	Liquid to Vapor	Inlet: 14 bar (203 psi) Outlet: 1.2 bar (17.4 psi)	Inlet: 55° C (131° F) Outlet: -7° C (19° F)

[1] Pressure maintained in the refrigerant system by the variable displacement compressor despite variables in temperature, load and engine speeds (RPM).

[2] Temperature maintained in the refrigerant system by the variable displacement compressor despite variables in temperature, load and engine speeds (RPM).

87-94

A/C refrigerant system, testing with pressure gauges

Due to the constant temperature/pressure relationship of refrigerant R-134a, approximate high-side system temperature can be determined based on system pressure.

Pressure gauges may have one or more temperature scales in addition to the pressure scale. Since various refrigerants have different temperature/pressure relationships, each gauge is specific for a particular refrigerant.

Measuring pressure and temperature in a switched-on refrigerant system

Use the A/C refrigerant high-pressure gauge to measure high pressure between the compressor and restrictor (including condenser) with the A/C switched on.

Use the A/C refrigerant low-pressure gauge to measure low pressure between the restrictor and the compressor inlet (including evaporator) with the A/C switched on.

The temperature displays of the low- and high-pressure gauges apply only to a portion of the low- and high-pressure sides. The low-pressure gauge displays approximate temperature between the restrictor and evaporator outlet. The high-pressure gauge displays approximate temperature between the compressor outlet and restrictor.

87-95

Note:

The temperature/pressure relationship only holds true when the refrigerant system contains liquid and vapor, but not when it contains only gas. In the gaseous state, the temperature is approx. 10-30° C (18-54° F) higher than indicated on the pressure gauge.

Measuring pressure and temperature in a closed container or switched-off refrigerant system

Due to the constant temperature/pressure relationship of R-12 and R-134a, approximate temperature in a closed container or in a switched-off A/C system can be determined based on its pressure.

If the temperature displayed on a gauge is lower than the actual temperature of the refrigerant, the refrigerant container or system is empty (discharged).

Note:

The temperature/pressure relationship only holds true when the refrigerant system contains liquid and vapor, but not when it contains only gas. In the gaseous state, the temperature is approx. 10-30° C (18-54° F) higher than indicated on the pressure gauge.

87-96

A/C refrigerant system, discharging

WARNING!

- ***Always use an Underwriter s Laboratory (UL) approved refrigerant recovery/recycling/recharging unit such as ent-Moore ACR[4], or equivalent, whenever discharging an R-134a A/C system.***
- ***Any person who services a motor vehicle air conditioner MUST, by law, be properly trained and certified and use approved refrigerant recycling equipment. Technicians must complete an EPA approved recycling course to be certified.***
- ***State and local governments may have additional requirements regarding air conditioning servicing. Always comply with state and local laws.***
- ***Always wear safety goggles when charging or discharging system.***

87-97

CAUTION!

- ***Always use separate refrigerant recovery/recycling/recharging servicing equipment for R-1 and R-134a systems. DO NOT use one piece of equipment for both R-1 and R-134a systems. The residual traces of refrigerant inside the equipment will contaminate and damage the equipment. Servicing equipment includes recovery/recycling/recharging unit, charging station, vacuum pump, manifold gauges, etc.***

- ***DO NOT use R-1 servicing equipment on R-134a systems or R-134a equipment on R-1 systems or damage to both the vehicle A/C system and servicing equipment may result. Use only equipment designed to meet Society of Automotive Engineers (SAE) standards.***

- ***R-134a and R-1 systems use different si e service fittings. NEVER use adaptors to convert an R-1 fitting to R-134a si e or R-134a fitting to R-1 si e.***

Note:

Refer to safety measures starting on ⇒ Page 87-1 prior to discharging or charging A/C refrigerant system.

87-98

Note:

Make sure that initial set-up of the refrigerant recovery/recycling/recharging unit has been completed before discharging the A/C system.

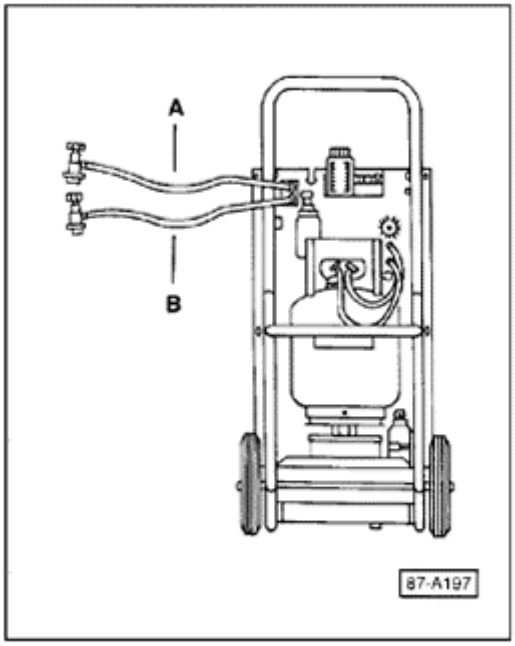

- Connect red high-pressure hose -A- of refrigerant recovery/recycling/recharging unit to high side fitting on vehicle and open coupler valve.
- Connect blue low-pressure hose -B- of refrigerant recovery/recycling/recharging unit to low side fitting on vehicle and open coupler valve.

CAUTION!

Always follow manufacturer s instructions when using a refrigerant recovery/recycling/recharging unit.

- Following refrigerant recovery/recycling/recharging unit manufacturer s instructions, discharge A/C system into refrigerant recovery/recycling/recharging unit.
- Disconnect power supply from A/C clutch to prevent accidental compressor operation with A/C system discharged.

87-99

A/C refrigerant system, flushing with compressed air and nitrogen

CAUTION!

- ***When using compressed nitrogen always use a pressure regulator and the proper adaptor hoses and fittings (available locally). During flushing, use existing exhaust/ventilation systems to draw off the gas mixture escaping from the A/C system.***

- ***DO NOT flush R-134a refrigerant system with R-11. R-11 is not compatible with R-134a refrigerant and PAG oil and will cause total system contamination.***

- Use compressed air and nitrogen (available locally) to remove moisture, impurities and old refrigerant oil from A/C refrigerant system.

- First blow out old refrigerant oil and dirt with compressed air, then dry components with nitrogen.

- DO NOT blow compressed air and nitrogen through the compressor or expansion valve. Only blow compressed air and nitrogen through disconnected, free flowing components (i.e. disconnected hose, condenser, evaporator, etc.)

- DO NOT blow compressed air and nitrogen into a capped off A/C component. Pressurized R-134a refrigerant in the presence of oxygen may form a combustible mixture.

87-100

- Always flush components in opposite direction of refrigerant flow.
- Flush evaporator through the low-pressure line with the high-pressure line removed.
- If any component has dark thick deposits that cannot be removed with compressed air, replace component.
- Thin light gray deposits in refrigerant lines and hoses are normal and do not impair the function of the system.
- Always replace receiver drier and restrictor after flushing.
- Dispose of contaminated refrigerant (PAG) oil following laws governing hazardous waste disposal. Do not combine PAG oil with any other old oils such as engine oil or transmission fluid.

87-101

Flush refrigerant system with compressed air and nitrogen if:

- Refrigerant oil is dark and viscous (thick)
- Too much refrigerant oil is in the system following compressor replacement
- Unclear or do not know how much refrigerant oil is in the system
- Moisture, dirt or other impurities have entered the refrigerant system (i.e. following an accident)
- Unable to pull a constant vacuum during evacuation of a leak-free system due to excessive moisture in the system
- Refrigerant system has been open longer than the time required for normal repairs (i.e. following an accident)
- Based on temperature and pressure measurements, system is diagnosed with moisture contamination
- Compressor is replaced due to noises or internal damage
- Flushing is required after replacing certain components in certain situations ⇒ Page 87-89

87-102

A/C refrigerant system, evacuating and recharging

WARNING!

- ***Always use an Underwriter s Laboratory (UL) approved refrigerant recovery/ recycling/recharging unit such as ent-Moore ACR[4], or equivalent, when evacuating and recharging an R-134a A/C system.***
- ***Any person who services a motor vehicle air conditioner MUST, by law, be properly trained and certified and use approved refrigerant recycling equipment. Technicians must complete an EPA approved recycling course to be certified.***
- ***State and local governments may have additional requirements regarding air conditioning servicing. Always comply with state and local laws.***
- ***Always wear safety goggles when discharging, evacuating and recharging an A/C system.***

CAUTION!

Always follow manufacturer s instructions when using a refrigerant recovery/recycling/recharging unit.

Notes:

- *Refer to R-134a safety measures prior to discharging or charging A/C refrigerant system* ⇒ *Page 87-1* .
- *Follow refrigerant recovery/recycling/recharging unit manufacturer s instructions for evacuating and recharging A/C system.*
- *Evacuate refrigerant system for a minimum of 30 minutes.*
- *When recharging A/C system, add correct amount of refrigerant and PAG oil to system* ⇒ *Page 87-114* .
- *After system recharge, manually rotate A/C compressor approx. 10 turns before starting engine. Start engine with A/C OFF. After idle speed has stabilized, switch A/C ON and let engine idle (compressor running) for a minimum of two minutes before raising engine speed.*

A/C refrigerant system, troubleshooting

Requirements

- Electrical systems OK
- Air flow distribution systems (controls and cables) OK

Correct and repair as necessary before proceeding.

If any one of the following system conditions exists, check A/C refrigerant system pressures ⇒ Page 87-106 .

- A/C does not cool (cooling has stopped completely)
- Insufficient cooling during all driving speeds or engine speeds (RPM)
- No cooling or insufficient cooling after a period of driving

Compressor noisy

- Tighten compressor and compressor bracket mounting bolts using torque wrench.

- Check routing of A/C refrigerant hoses and lines; hoses and lines must not contact other components and must be installed without tension or kinks, reposition or realign as necessary.

A/C compressor noisy immediately after switching A/C ON and/or when driving around corners or braking (refrigerant shock)-system overcharged

- Discharge A/C refrigerant system ⇒ Page 87-96 , then evacuate and recharge ⇒ Page 87-102 .

With an otherwise properly operating A/C system, water sprays out of instrument panel vents

- Check evaporator drain pipe for proper routing (should not be kinked or pinched).

- Check evaporator water drain valve.

  - Must not be plugged with wax, dirt or undercoating (clean if necessary)

  - Valve flap must open/close properly

- Check plenum tray.

  - Must be properly installed and not damaged

87-106

A/C refrigerant system pressures, checking

Check A/C refrigerant system pressures using these three tests:

1 - Air temperature drop from center instrument panel outlet (A/C system cooling performance)

2 - A/C system high pressure

3 - A/C system low pressure

The combined results of all three steps determine which part of the A/C system is causing the problem, see table ⇒ Page 87-110 .

Test conditions

- A/C refrigerant system fully charged; discharge, evacuate and recharge system if necessary
- Condenser and radiator clean and free of obstructions (spray clean if necessary)
- Air distribution can be adjusted correctly using control knobs (all air distribution flaps reach end positions)
- Wiring OK per wiring diagram
- Outside (ambient) air temperature between 20-30 ° C (68-86 ° F)
- Drive belts for A/C compressor and Generator in good condition and properly tensioned

87-107

Test 1: Air temperature drop from center instrument panel outlet, checking (A/C system cooling performance)

- Start engine.
- Set temperature control to maximum "cold".
- Press "A/C" button and select second blower speed.
- Adjust air distribution to instrument panel outlets.
- Insert thermometer into center instrument panel outlet and raise engine speed to approximately 1500 RPM.

Specified result

With humidity normal and outside (ambient) temperature between 20-25 ° C (68-77 ° F), system is cooling satisfactorily if air temperature from center instrument panel vent drops below 10 ° C (50 ° F) within 1 minute.

For higher ambient temperatures and/or higher humidity, specified air temperature from center instrument panel vent can be slightly higher.

If specified reading is not obtained, perform tests 2 and 3, then compare results of all three tests ⇒ table, ⇒ Page 87-110 .

87-108

Test 2: A/C system high pressure, checking

- Connect high- and low-pressure hoses of refrigerant recovery/ recycling/recharging unit Kent-Moore ACR[4] or equivalent, to high- and low-pressure service valves.
- Disconnect electrical connector from coolant fan.
- Start engine.
- Set temperature control to maximum "hot".
- Press "A/C" button and select highest blower speed.
- Adjust air distribution to footwell outlets.
- Raise engine speed to approximately 1500 RPM.

Specified result

System high pressure is normal if high-pressure gauge reads 232 psi (16 bar) within 30 seconds.

If specified reading is not obtained, also perform test 3 and compare results of all three tests ⇒ table, ⇒ Page 87-110 .

87-109

Test 3: A/C system low pressure, checking

- Connect high- and low-pressure hoses of refrigerant recovery/recycling/recharging unit Kent-Moore ACR[4], or equivalent, to high- and low-pressure service valves.
- Start engine.
- Set temperature control to maximum "cold".
- Press "A/C" button and select first blower speed.
- Adjust air distribution to instrument panel outlets.
- Raise engine speed to 1500 RPM.

Specified result

System low pressure is normal if low-pressure gauge reads 22-36 psi (1.5-2.5 bar) within 30 seconds.

If specified reading is not obtained, compare results of all three tests ⇒ table, ⇒ Page 87-110 .

87-110

Test 1 Temperature from center air vent[1)]	Test 2 High pressure[2)]	Test 3 Low pressure[2)]	Possible causes of incorrect readings	Corrective measures
Normal	Normal	Normal	None	---
Too high	Normal	Normal	Temperature flap position incorrect	Adjust temperature flap cable
Too high	Too low	Normal	Compressor	Replace compressor
Normal	Too low	Normal	Compressor	Replace compressor
Normal	Normal	Too high or too low		
Too high	Normal	Too high or too low	Expansion valve or compressor	Clean/replace expansion valve or replace compressor
Normal	Too high or too low	Too high or too low		

[1)] Normal air outlet temperature approx. 6 ° C (43 ° F). For higher ambient temperatures and/or higher humidity, specified air temperature from center instrument panel vent can be slightly higher.

[2)] For normal system temperatures and pressures ⇒ Page 87-93 .

87-111

A/C refrigerant system cooling performance, checking

Note:

A/C evaporator temperature switch -E33- (if equipped) switches A/C compressor OFF only in special instances so evaporator does not ice up variable displacement A/C compressor maintains temperature of 0° C (32° F) in evaporator.

Test conditions

- A/C refrigerant system fully charged
- A/C clutch -N25- and compressor function OK
- Condenser and radiator clean and free of obstructions
- Air distribution can be adjusted properly
- Wiring OK as per wiring diagram
- Outside (ambient) temperature 20° C-30° C (68° F-86° F)

87-112

Checking

- Start engine.
- Set temperature control to maximum "cold".
- Press A/C button and select second blower speed.
- Adjust air distribution to instrument panel outlets.
- Insert thermometer into center instrument panel outlet.
- Raise engine speed to approximately 1500 RPM.

Specified result

With normal humidity and outside (ambient) temperature between 20° -25° C (68° -77° F), system is sufficiently charged if air temperature from center instrument panel vent drops below 10° C (50° F) within one minute.

For higher ambient temperatures and/or higher humidity, specified air temperature from center instrument panel vent can be slightly higher.

87-113

A/C refrigerant system, checking for leaks

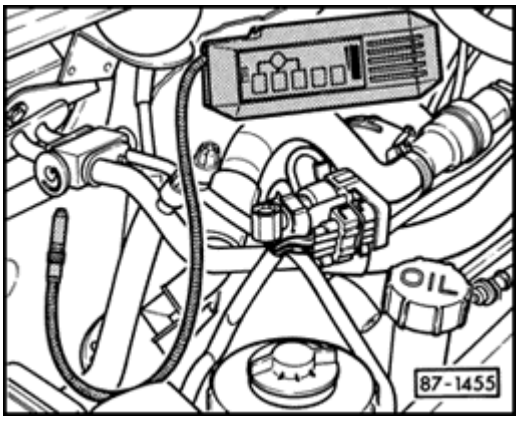

Use halogen leak detector, Hitec HI400A-TEL or equivalent, to check for refrigerant leaks, following the leak detector manufacturer s instructions.

Refrigerant gas dissipates very quickly. To make the job easier, avoid drafty or windy areas when checking for leaks.

If the refrigerant system is discharged (empty), re-charge the system with approx. 100 g (3.5 oz.) of refrigerant in order to check for leaks.

87-114

A/C refrigerant system, capacities

Refrigerant R-134a, capacity

Compressor	uantity
Sanden SD7-V16 (Passat 1995 - 1997)	1150 g ± 50 g (40.5 oz ± 1.8 oz)

Obtain R-134a refrigerant from a local A/C supplier under one of the following names:

- R-134a
- Tetrafluoroethane
- $CH_2F\ CF_3$
- H-FKW 134a
- SUVA® TRANS A/C
- ARCTON® 134a

Note:

R-134a refrigerant is packaged in different containers. Some are used only for commercial applications which are sold in cylinders using a 1/4 flare fitting. This does not connect to the vehicle fittings and servicing equipment. Use only R-134a which come in containers having the correct type of service fitting.

87-115

Refrigerant (PAG) oil R-134a, capacity

Model	Total system capacity
Passat from 1995 to 1997	115 cc (4.6fl. oz.)

Replacement A/C compressors supplied by the Parts Department are filled with 115 cc (fl. oz.) of refrigerant oil. This is the total A/C system refrigerant oil capacity.

87-116

Refrigerant (PAG) oil R-134a, identification

Use only the correct type of refrigerant oil (PAG oil) specified for use with R-134a and compressor type.

Compressor	Refrigerant oil Part No.
Sanden SD7-V16	G 052 154 A2

CAUTION!

Part numbers are for reference only. Always check with for Parts Department for latest parts information.

87-117

Refrigerant (PAG) oil R-134a, distribution

The total refrigerant oil quantity is distributed in the refrigerant circuit as follows:

Compressor approx. 50%

Condensor approx. 10%

Suction pipe approx. 10%

Discharge pipe --

Evaporator approx. 20%

Receiver drier approx. 10%

Note:

When replacing refrigerant circuit components, fill an appropriate amount of refrigerant oil (as indicated above) into the new part before installation.

Volkswagen Passat

Official Factory Repair Manual

1995, 1996, 1997
Gasoline, Turbo Diesel, TDI
4-cylinder and VR6, including wagon

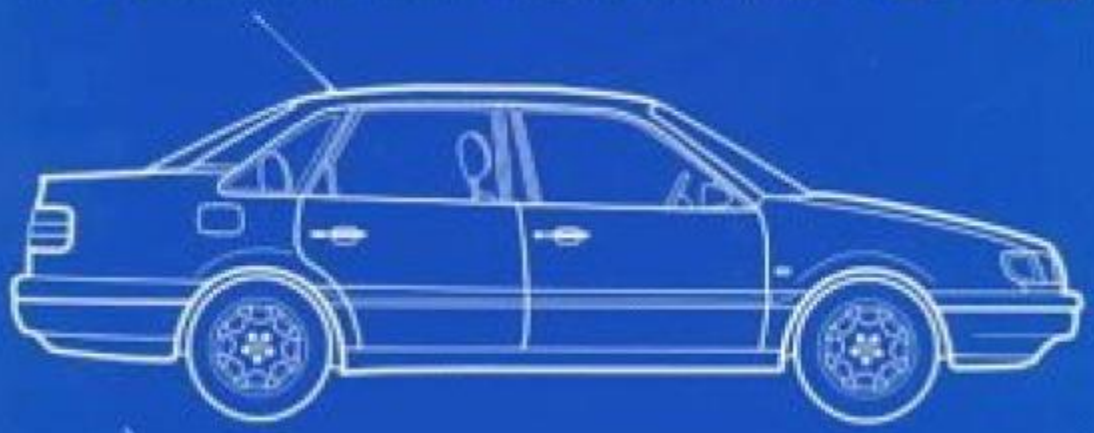

Robert Bentley

PASSAT '95 - '97

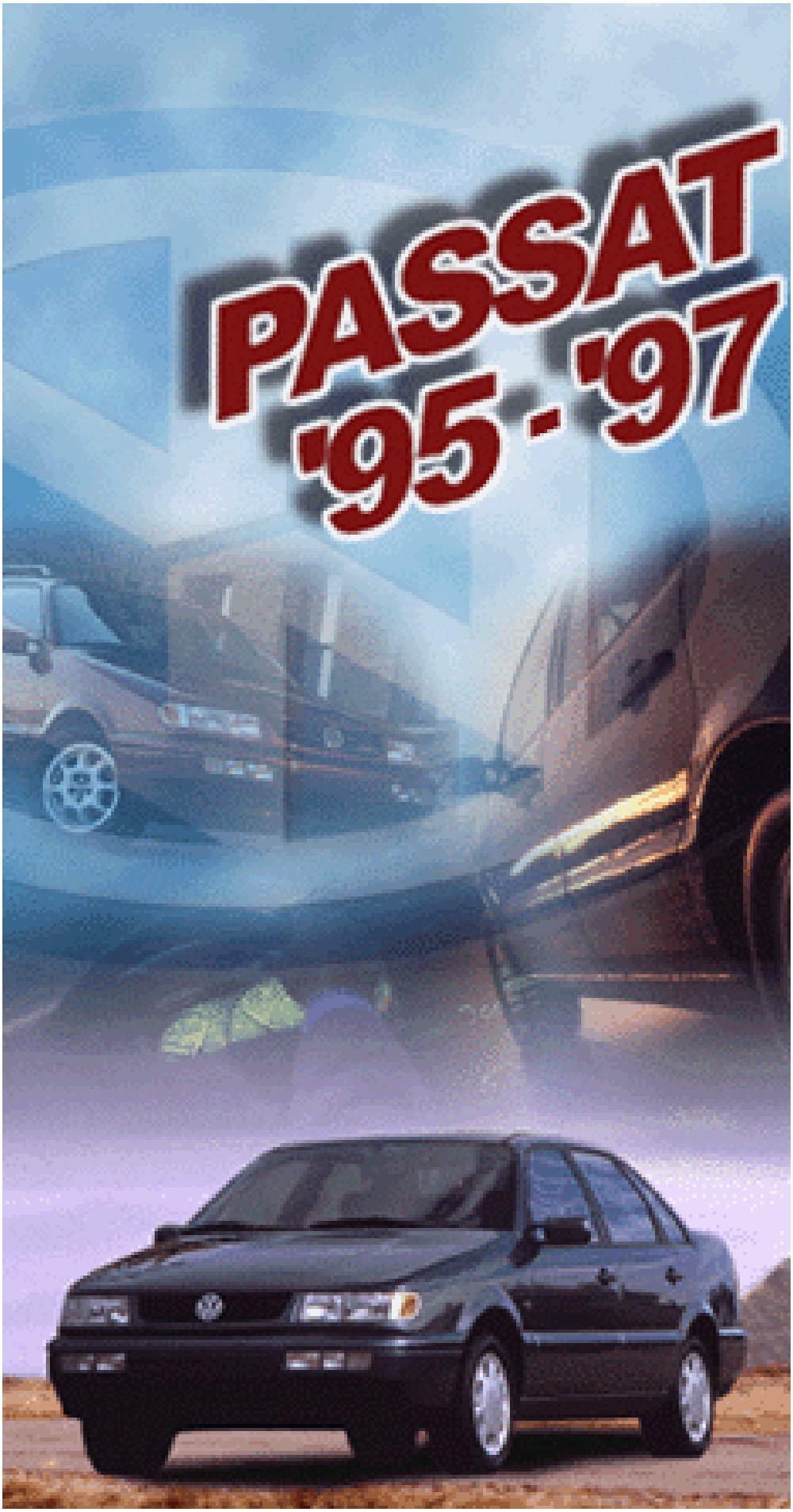

Maintenance

Maintenance

Engine overview

Oil change service
Oil change service every 10,000 miles (15,000 Km)

Inspection service
Inspection service every 12 months
Inspection service every 20,000 miles (30,000 km)

General Information
Type plate
Vehicle Identification Number (VIN)
Engine code and engine number
Vehicle, lifting
Tow starting/towing

Work descriptions
Driver s and front passenger airbags, visual check of airbag units
On Board Diagnostic (OBD), checking DTC memory of all systems
Door check straps and securing bolts, lubricate
Sunroof, checking function, cleaning and lubricating guide rails
Windshield wiper/washer system and headlight cleaning system, checking function
Windshield wiper blades, check park position and pitch angle
Checking tire condition, tread wear pattern , filling pressure and tread depth
Engine oil level, checking
Engine oil, changing and replacing oil filter
Engine and components in engine compartment (from above and below), check for leaks and damage
V-belt, checking condition and tension
Ribbed belt, Check condition and tension (engines without automatic tensioning roller)
Front manual transmission/final drive, check oil level
Rear final drive (Syncro): Check oil level
Automatic transmission, check final drive oil level
Brake system, visual inspection
Brake pads front and rear, checking thickness
Underbody sealant, checking
Tie rod ends, checking
Ball joints, checking
Cooling system anti-freeze protection and coolant level, checking

Spark plugs, replacing
Dust and pollen filter element, replacing
Toothed belt for camshaft drive: (Diesel engine code AAZ), Ccheck condition and tension
Toothed belt and toothed belt tensioning roller (Diesel engine codes AFN and 1Z), replacing
Toothed belt for camshaft drive (gasoline engine), check condition and tension
Toothed belt, check wear (TDI engines)
Fuel filter, replacing (diesel engine)
Fuel filter, draining water (Diesel engine)
Automatic transmission, Checking ATF level
Automatic transmission, changing ATF
Power steering fluid level, checking
Brake fluid, changing
Brake fluid level, checking
Battery, checking
Idle speed (Diesel engine code AAZ): Checking
Headlight setting, checking
Road test, performing

Engine overview

			Engines →	Gas engine
Code letters				AAA
Manufactured			from	10.93
Number of cylinders / valves per cylinder				6 / 2
Displacement			Liters	2.8L
Output	kW	RPM		128/5800
Tor ue	Nm	RPM		235/4200 1)
Bore			∅ mm	81.0
Stroke			mm	90.3
Compression ratio				10.0
Fuel injection / ignition system				Motronic M 2.9
RON			at least	95 unleaded
On Board Diagnostic (OBD)				es
Catalytic converter				es
Oxygen sensor control				es
Exhaust Gas Recirculation (EGR)				No
Exhaust turbocharging system				No

1) 240 Nm when using Super plus unleaded RON 98

) with catalytic converter, unleaded

			Engines →	Gas engine
Code letters				ABA
Manufactured			from	03.95
Number of cylinders / valves per cylinder				4/2
Displacement			Liters	2.0L
Output	kW	RPM		85 5400
Tor ue	Nm	RPM		165 3200
Bore			∅ mm	82.5
Stroke			mm	92.8
Compression ratio				9.4 1
Fuel injection / ignition system				Motronic MFI
RON			at least	91 unleaded 1)
On Board Diagnostic (OBD)				es
Catalytic converter				es)
Oxygen sensor control				es
Exhaust Gas Recirculation (EGR)				es
Exhaust turbocharging system				No

1) In exceptional cases, fuel with a RON of at least 91 may be used, although engine performance will be diminished

			Engines →	Diesel engine	Diesel engine

Code letters			AAZ	1Z
Manufactured		from	10.93	10.93
Number of cylinders / valves per cylinder			4 / 2	4 / 2
Displacement		Liters	1.9L	1.9L
Output	kW	RPM	55/4400	66/4000
Tor ue	Nm	RPM	140/2200...2800	202/1900
Bore		∅ mm	79.5	79.5
Stroke		mm	95.5	95.5
Compression ratio			22.5 1	19.5 1
Fuel injection / ignition system			Turbo-Diesel	TDI
CN		at least	49	49
On Board Diagnostic (OBD)			No	es
Catalytic converter			es	es
Oxygen sensor control			No	No
Exhaust Gas Recirculation (EGR)			es	es
Exhaust turbocharging system			es	es

2

Oil change service

Oil change service every 10,000 miles (15,000 Km)

Vehicles with a yearly mileage performance greater than 10,000 miles (15,000 Km)

- sequence of individual service positions has been tested and optimized. Therefore they should be adhered to, to prevent unnecessary work interruptions.
- When malfunctions are found within framework of an oil change service, which require repair measures, inform customer.
- Ask customer whether new wiper blades should be fitted and whether they require "Windshield Clear" G 052 164 (cleaner and anti-freeze) in windshield washer system.

Work to be performed	page
- Dust and pollen filter: Replace filter element	⇒ 01-5, Dust and pollen filter element, replacing
- Toothed belt: Check wear (only TDI engines)	⇒ 01-5, Toothed belt, check wear (TDI engines)
- Fuel filter: Drain water (Vehicles with Diesel engine, which use bio diesel conforming to specification DIN E 51 606 - or use diesel, which does not conform to specification EN 590)	⇒ 01-5, Fuel filter, draining water (Diesel engine)
- Engine oil: Drain, replace oil filter	⇒ 01-5, Engine oil, changing and replacing oil filter
- Disc brake pads front and rear: Check thickness	⇒ 01-5, Brake pads front and rear, checking thickness
- Engine oil: Filling	⇒ 01-5, Engine oil, changing and replacing oil filter

- Service sticker: Note date for next scheduled service (also brake fluid change) on sticker and affix sticker to door beam (B-pillar)

3

Inspection service

Inspection service every 12 months

- Ask customer whether new wiper blades should be installed and whether they require "Windshield Clear" G 052 164 (cleaner and anti-freeze) in windshield washer system.

- sequence of individual service positions has been tested and optimized. Therefore they should be adhered to, to prevent unnecessary work interruptions.

- work description sequence corresponds with Inspection service work procedure, which is most commonly performed service.

- When malfunctions are found within framework of an inspection service, which require repair measures, inform customer.

Work to be performed	**page**
Electronics	
- Front lights - check function: Parking light, low beam, high beam, fog lights, turn signals, emergency flashers	
- Rear lights - check function: Brake light (also 3rd brake light), tail light, back-up lights, fog light, license plate lights, luggage compartment light, turn signals, emergency flashers	
- Interior and glove compartment lighting, cigarette lighter, horn and warning lamps: Checking function	
- Airbag for driver and passenger: Perform a visual check of airbag units for outer damage	⇒ 01-5, Driver apos;s and front passenger airbags, visual check of airbag units
- On Board Diagnostic (OBD): Check DTC memory of all systems	⇒ 01-5, On Board Diagnostic (OBD), checking DTC memory of all systems
Vehicle exterior	
- Door arrester and securing bolts: Lubricate	⇒ 01-5, Door check straps and securing bolts, lubricate
- Windshield wiper/washer system and headlight cleaning	⇒ 01-5, Windshield wiper/washer system

system: Check function and setting	and headlight cleaning system, checking function
- Windshield wiper blades: Check for damage; check rest position; only for "juddering" wiper blades: Check pitch angle	⇒ 01-5, Windshield wiper blades, check park position and pitch angle
Tires	
- Spare wheel: Check condition, wear pattern, tread depth mm	⇒ 01-5, Checking tire condition, tread wear pattern , filling pressure and tread depth
- Front left tire: Check condition, wear pattern, tread depth mm	⇒ 01-5, Checking tire condition, tread wear pattern , filling pressure and tread depth
- Rear left tire: Check condition, wear pattern, tread depth mm	⇒ 01-5, Checking tire condition, tread wear pattern , filling pressure and tread depth
- Rear right tire: Check condition, wear pattern, tread depth mm	⇒ 01-5, Checking tire condition, tread wear pattern , filling pressure and tread depth
- Front right tire: Check condition, wear pattern, tread depth mm	⇒ 01-5, Checking tire condition, tread wear pattern , filling pressure and tread depth
Vehicle from below	
- Engine oil: Drain or extract; replace oil filter	⇒ 01-5, Engine oil, changing and replacing oil filter
- Engine and components in engine compartment (from below): Visual check for leaks and damage	⇒ 01-5, Engine and components in engine compartment (from above and below), check for leaks and damage
- Transmission, final drive and joint protective bellows/boots: Visual check for leaks and damage	
- Brake system: Visual check for leaks and damage	⇒ 01-5, Brake system, visual inspection
- Brake pads front and rear: Checking thickness	⇒ 01-5, Brake pads front and rear,

	checking thickness
- Exhaust system: Perform visual check for leaks, security and damage	
- Track rod ends: Check play, security and joint boots	⇒ 01-5, Tie rod ends, checking
- Ball joints: Perform visual check of swivel joint boots for leaks and damage	⇒ 01-5, Ball joints, checking
Engine compartment	
- Engine oil: Filling	⇒ 01-5, Engine oil, changing and replacing oil filter
- Engine and components in engine compartment (from above): Visual check for leaks and damage	⇒ 01-5, Engine and components in engine compartment (from above and below), check for leaks and damage
- Windshield wipe-/wash system: Top-up with fluid G 052 164	⇒ 01-5, Check freeze protection protection content of windshield wiper/washer system, top off if necessary
- Cooling system: Checking freeze protection and coolant level	⇒ 01-5, Cooling system anti-freeze protection and coolant level, checking
Specification 13 ° F (-25 ° C) (in countries with arctic climate -31 ° F (-35 ° C)) / actual value(measured value) ° F (° C)	
- Dust and pollen filter: Replace filter element	⇒ 01-5, Dust and pollen filter element, replacing
- Toothed belt: Check wear (only TDI engines)	⇒ 01-5, Toothed belt, check wear (TDI engines)
- Air cleaner: Clean housing and replace filter element (every 2 years or every 60,000 km - whichever occurs first)	
- Fuel filter: Drain water (Diesel engine)	⇒ 01-5, Fuel filter, draining water (Diesel engine)
- Change brake fluid / additional work as a separate charge! (every 2 years)	⇒ 01-5, Brake fluid, changing
- Brake fluid level (depending on brake pad wear): Checking	⇒ 01-5, Brake fluid level, checking

- Battery: Checking	⇒ 01-5, Battery, checking
- Idle speed: Checking (Vehicles with Diesel engine code AAZ, on which no emissions test has been performed)	⇒ 01-5, Idle speed (Diesel engine code AAZ): Checking
Final work procedures	
- Tire filling pressure at all 4 wheels and spare wheel: Checking	⇒ 01-5, Checking tire condition, tread wear pattern , filling pressure and tread depth
- Headlight setting: Checking	⇒ 01-5, Headlight setting, checking
- Service sticker: Note date for next scheduled service (also brake fluid change) and affix sticker to driver s-side door beam (B-pillar)	
- Road test vehicle	⇒ 01-5, Road test, performing

) Applicable only for countries where there are no country specific mandatory exhaust emission regulations.

Inspection service every 20,000 miles (30,000 km)

- Ask customer whether new wiper blades should be fitted and whether they require "Windshield Clear" G 052 164 (cleaner and anti-freeze) in windshield washer system.
- Check First aid box storage life date has not been exceeded. If this is case, ask customer whether First Aid box should be replaced.
- Sequence of individual service positions has been tested and optimized. Therefore they should be adhered to, to prevent unnecessary work interruptions.
- Work description sequence corresponds with Inspection service work procedure, which is most commonly performed service.
- When malfunctions are found within framework of an inspection service, which require repair measures, inform customer.

) Applicable only for countries where there are no country specific mandatory exhaust emission regulations.

General Information

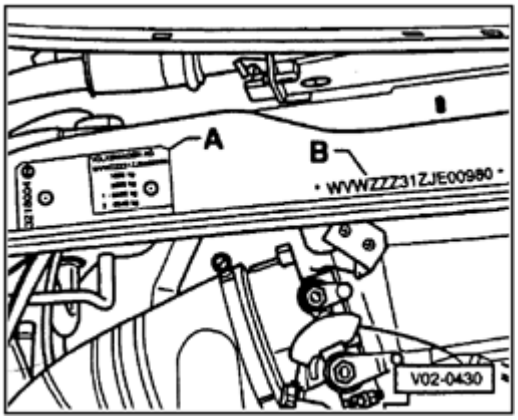

Type plate

A - Type plate

- Located on front lock carrier plate.

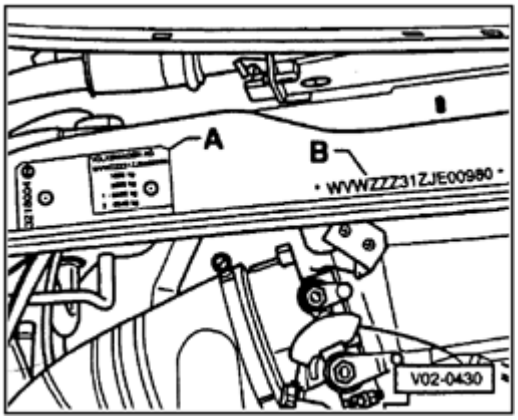

Vehicle Identification Number (VIN)

B - Vehicle Identification Number (VIN)

- It is stamped on rear engine compartment bulkhead and is visible through a window in plenum chamber cover.

Meaning of Vehicle Identification Number (VIN):

W W	ZZZ	A	Z		E or B	000 001
Manufacturer s mark	Filler characters	Model	Filler characters	Model year 1994	Production location	Serial number

Engine code and engine number

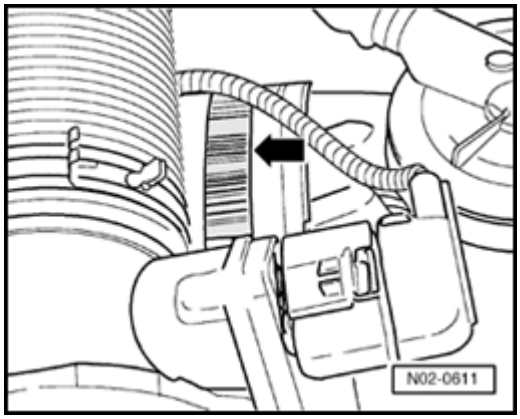

Engine code and engine number can be found fastest on sticker **- arrow -** on toothed belt guard (4-cyl.-engine) or on left valve cover (6-cyl.-engine).

Vehicle, lifting

Caution!

- ***Vehicle may only be lifted at points indicated in illustration in order to avoid damaging vehicle floor pan and to prevent vehicle from tipping.***
- ***Never start engine and engage a gear with vehicle lifted so long as even one wheel has contact with floor. There is a risk of an accident if this is not observed!***
- ***If work is to be performed under vehicle it must be supported by suitable stands.***

Floor jack:

In order to prevent damage to vehicle underbody, a suitable rubber or wood liner must be used.

Vehicle must never be lifted on engine oil pan, transmission, rear axle, front axle or bottom sill. Serious damage can occur.

Workshop hoist:

Before driving onto hoist, make sure weight of vehicle does not exceed permissible hoist capacity.

Lift points for workshop hoists and floor jacks:

Front:

At reinforcing plate welded to floor panel.

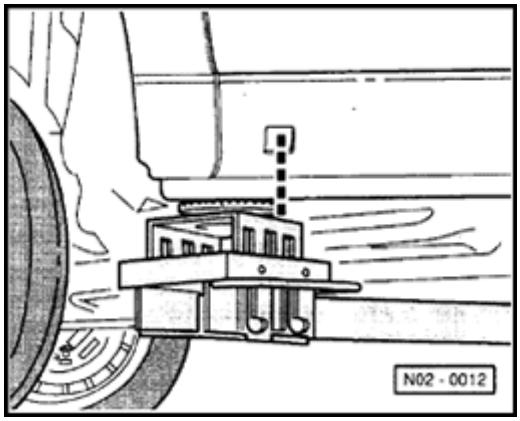

Position support so rear edge aligns with center of sill depression.

Rear:

At reinforcing plate welded to floor panel.

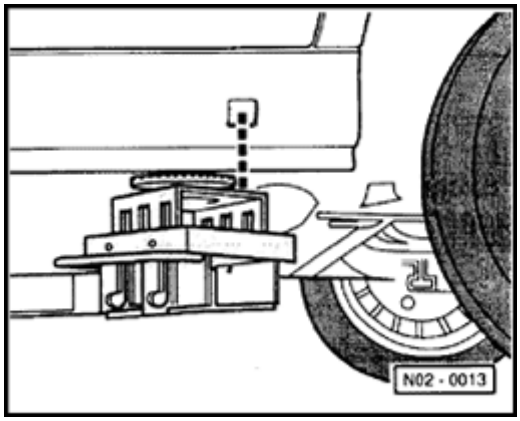

Position support so rear edge aligns with center of sill depression.

Caution!

Do not lift vehicle on vertical sill reinforcement or damage to vehicle could result.

Tow starting/towing

A towing eyelet must be screwed into front right bumper beforehand in order to be able to tow vehicle. towing eyelet is supplied with vehicle tool kit.

- Using a screwdriver, pry out cover toward front and remove.

- Screw in towing eyelet to stop and tighten using lug

wrench.

- After use, unscrew towing eyelet and store with vehicle tool kit. Re-install cover.

Rear towing eyelet is located at right in bumper and is covered by a flap.

- To open flap, pull flap downward and let it hang freely.

- To close flap, first insert at bottom and press upward until it engages.

***Note**:*

- *Tow-ropes or bars should be attached at above mentioned points only.*
- *Tow-rope should be able to stretch to reduce risk of damage to both vehicles. It is advisable to use synthetic fiber ropes or ropes of similar elastic material only. However, it is safer to use a tow-bar*
- *Avoid excessive towing effort and do not jerk. During towing operations on unsurfaced roads there is always a danger that attachment points will be overstressed and damaged.*
- *Battery from another vehicle should be used for starting if possible before trying to start an engine by towing.*

If vehicle has to be tow started or towed once

Note following:

- Regulations concerning towing must be observed.
- Both drivers must be familiar with specifics of towing procedures. Inexperienced drivers should not attempt to tow start or tow.
- When using a tow rope driver of towing vehicle must engage clutch very gently when driving off and changing gear.
- Driver of vehicle being towed must make sure that tow rope is always tight.
- Emergency lights must be switched on both vehicles - unless local regulations differ.

- Ignition must be switched on so that steering wheel is free and turn signals, horn and if necessary windshield wiper and washer can be used.

- Because brake booster only works when engine is running, more pressure is required accordingly on brake pedal when engine is not running.

- In vehicles with Power Assisted Steering (PAS), more force must be used to steer when engine is not running.

- When there is no lubricant in a manual transmission or automatic transmission, vehicle may only be towed with driving wheels lifted.

Important notes concerning tow starting a vehicle:

It is generally recommended not to tow start vehicle.
Instead jump leads should be used.

Other reasons against tow starting a vehicle:

- During tow starting, risk of an accident occurring is high, e.g. driving into vehicle towing.

- Vehicles with gasoline engines can be damaged by unburned fuel entering catalytic converter.

- Tow starting vehicles with an automatic transmission is for technical reasons not possible.

When tow starting vehicles with manual transmission, always note following:

Caution!

During tow starting, vehicles up to and including 1. L displacement, risk of an accident occurring is high, e.g. driving into towing vehicle . For this reason, a jump lead should be used for these vehicles.

- Before tow starting, engage 2nd or 3rd gear.

- Switch ignition on .

- As soon as engine starts, depress clutch and shift into neutral to avoid running into towing vehicle.

***Note**:*

- *For vehicles with catalytic converter (gasoline engines only), engine with catalytic converter at operating*

temperature must not be tow started over a long distance, otherwise unburned fuel reaches catalytic converter and can be burned there. This may cause catalytic converter to overheat.

When towing a vehicle with automatic transmission following additional points must be observed:

- Selector lever in "N" position.
- Do not tow vehicle faster than 30 mph (50 km/h).
- Do not tow further than 30 miles (50 km).
- If towing over greater distances, vehicle must be suspended at front.

Reason: When engine is not running transmission oil pump is not working and transmission is not adequately lubricated for high speeds or long distances.

Using a breakdown vehicle, vehicle may only be towed suspended at front.

Reason: If given a rear suspended tow, drive shafts turn backward. planetary gears in automatic transmission then turn at such high speeds that transmission will be severely damaged in a short time.

5

Work descriptions

Driver s and front passenger airbags, visual check of airbag units

You can see whether an airbag(s) is installed by inscription "AIRBAG" on steering wheel padded panel (driver s side) and on far side of dash panel (passenger side).

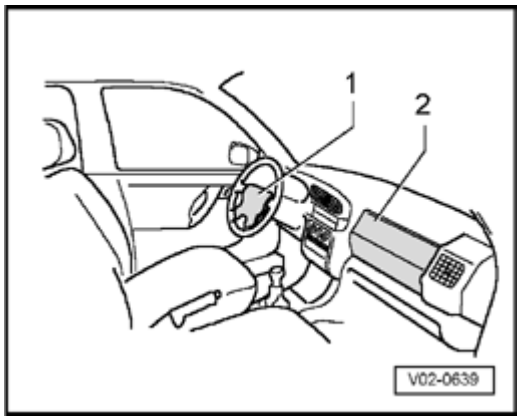

- Perform visual check of pad panel **- 1 -** and surface of instrument panel, right side **- 2 -** for exterior damage.

Caution!

- ***Steering wheel padded panel surface must not have stickers attached or be covered or be otherwise modified. This ensures that future function of airbag is guaranteed. Make sure customer is aware of these instructions.***
- ***Steering wheel padded panel must only be cleaned with a dry cloth or a cloth moistened with water.***

On Board Diagnostic (OBD), checking DTC memory of all systems

Interrogating DTC memory can be performed using one of two methods:

- using Scan Tool (ST) V.A.G 1551/ ⇒ 01-5, Interrogating DTC memory of all systems with scan tool VAG 1551:

or the

- Vehicle Diagnostic, Test and Information System VAS

5051/ ⇒ 01-5, Checking DTC memory of all systems using Vehicle Diagnosis, Testing and Information System VAS 5051: .

Interrogating DTC memory of all systems with scan tool VAG 1551:

Required special tools and equipment

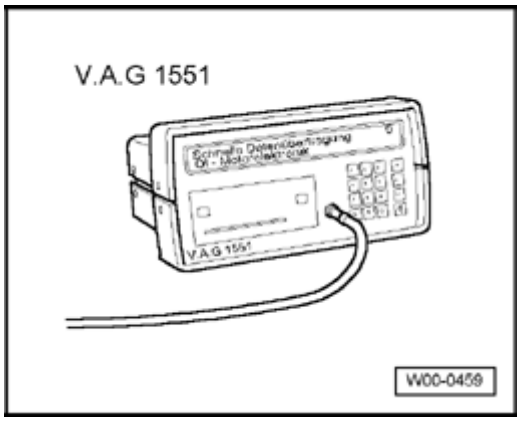

- VAG1551 Scan Tool (ST) V.A.G 1551/

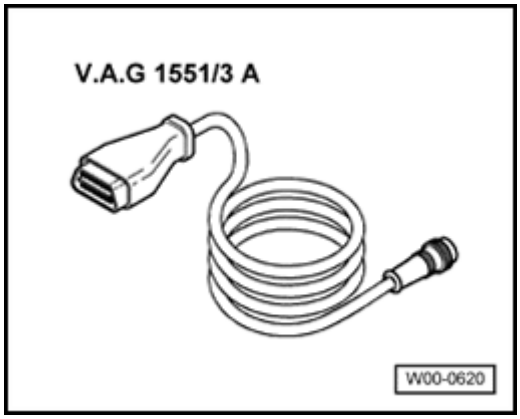

- adapter cable V.A.G 1551/3 A

Connecting scan tool VAG 1551:

Perform following work procedure:

- Engage parking brake.

- Automatic transmission: Shift selector lever into position "P" or "N" .

- Manual transmission: Shift gear stick in neutral.

With ignition switched off, connect Scan Tool (ST) V.A.G 1551/ as follows:

- Unclip cover below instrument cluster.

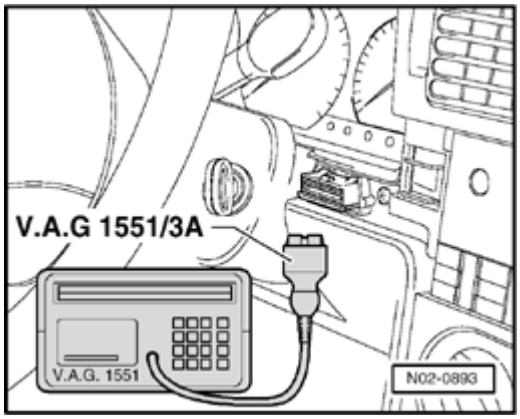

- With ignition switched off, connect Scan Tool (ST) V.A.G 1551/ using Adapter cable V.A.G 1551/3 A .

Interrogating DTC memory:

- Start engine and let run at idle.

- Switch printer on via Print button (indicator lamp in button lights up).

Indicated on display:

VAG - On Board Diagnostic (OBD) HELP

1- Rapid data transfer*

or

VAG - On Board Diagnostic (OBD) HELP

2- Blink code output*

* is displayed alternately

- Press button **- 1 -** to select "Rapid data transfer" operating mode.

Indicated on display:

Rapid data transfer HELP

Enter address word XX

- Press buttons **- 0 -** and **- 0 -** for address word "Automatic test sequence" .

Indicated on display:

Rapid data transfer Q

00 - Automatic test sequence

When a control module responds with its identification, display indicates number of stored errors or indicates "no malfunction recognized" .

DTCs stored in system are indicated in sequence and printed out. Then VAG1551 Scan Tool (ST) V.A.G 1551/ sends next address word.

Automatic test sequence has ended when following indication appears on display:

VAG - On Board Diagnostic (OBD) HELP

1- Rapid data transfer*

or

VAG - On Board Diagnostic (OBD) HELP

2- Blink code output*

* is displayed alternately

- Switch ignition off.

If malfunctions are stored then a repair measure is required. Pass malfunction protocol on for repair.

Checking DTC memory of all systems using Vehicle Diagnosis, Testing and Information System VAS 5051:

Required special tools and equipment

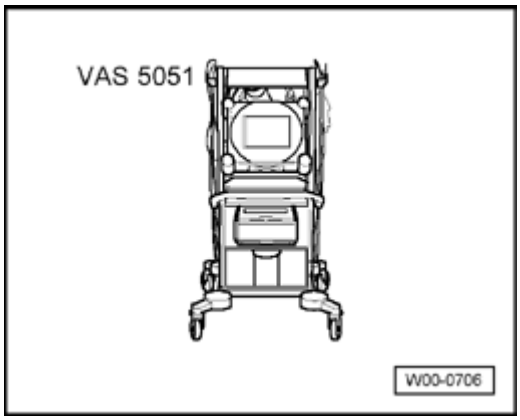

- Vehicle Diagnostic, Test and Information System VAS 5051/

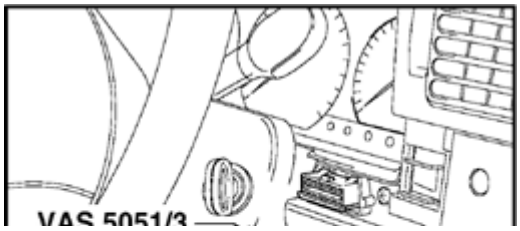

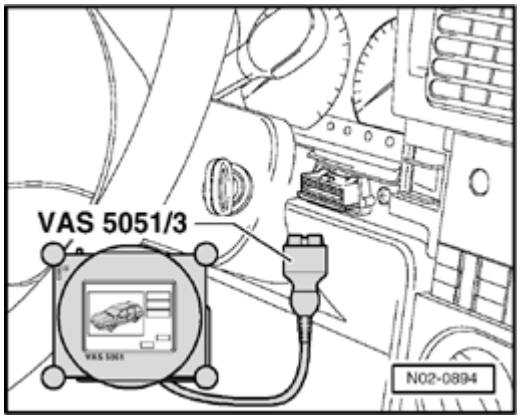

- Diagnostic cable, 5m without voltage supply VAS 5051/3

Connect VAS 5051 tester:

- Engage parking brake.

- Manual transmission: Shift gear stick in neutral.

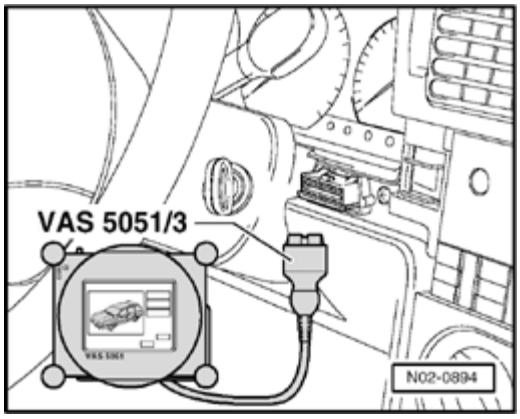

- With ignition switched off, connect Vehicle Diagnostic, Test and Information System VAS 5051/ using diagnostic cable, 5m without voltage supply VAS 5051/3 .

Check DTC memory:

- Switch ignition on .

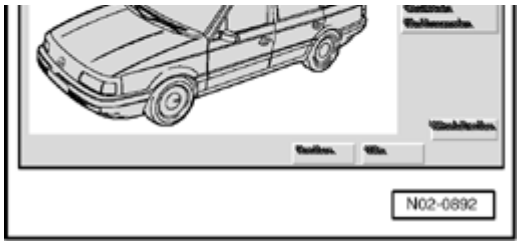

Indicated on display:

Select operating mode:

- Press button for "vehicle On Board Diagnostic (OBD)" on display **- arrow -** .

***Note**:*

- *If indications shown in work procedure are not indicated on display: ⇒ User manual for VAS5051 tester*

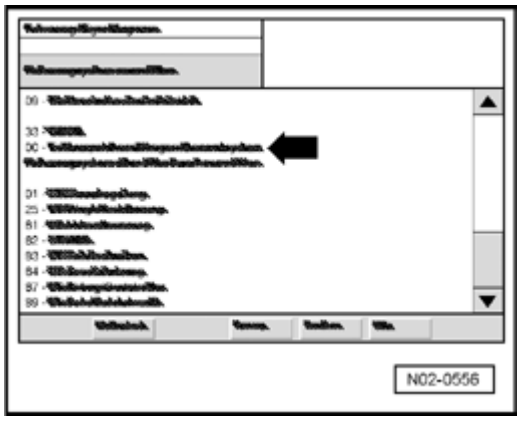

Indicated on display:

Select vehicle system:

- Press "00 - Check DTC memory, complete system" on display **- arrow -** .

- VAS5051 tester VAS 5051/ sends all known address words in sequence.

When a control module responds with its identification, display indicates number of stored errors or indicates "no malfunction recognized" .

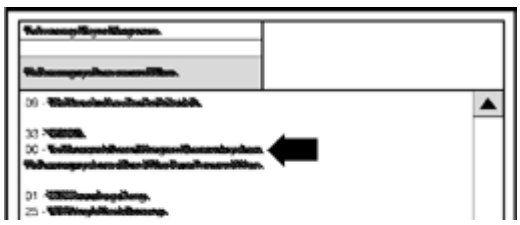

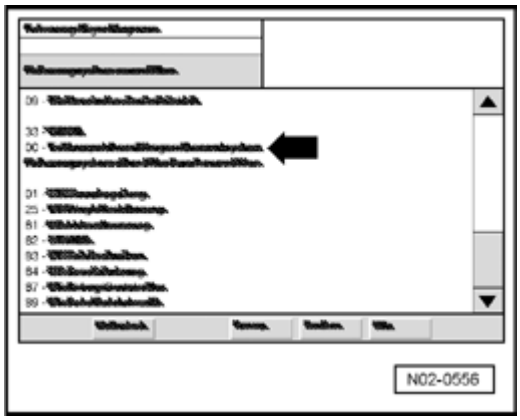

Any system malfunctions that are stored will be displayed one after other. Next, Vehicle Diagnostic, Test and Information System VAS 5051/ sends next address word.

Automatic test sequence has ended when following indication appears on display:

- Press "Print" button **- 1 -** on display and then press "Screen" in print menu.

Vehicle Diagnostic, Test and Information System VAS 5051/ prints out all malfunctions or "0 malfunctions detected" . If malfunctions are stored then a repair measure is required. Pass malfunction protocol on for repair.

- Press "Go to" button **- 2 -** on display.

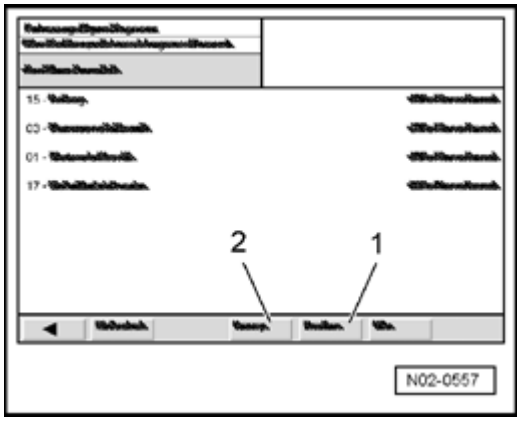

Indicated on display:

- Press "End" button **- arrow -** on display.

- Press "Exit" button in exit menu.

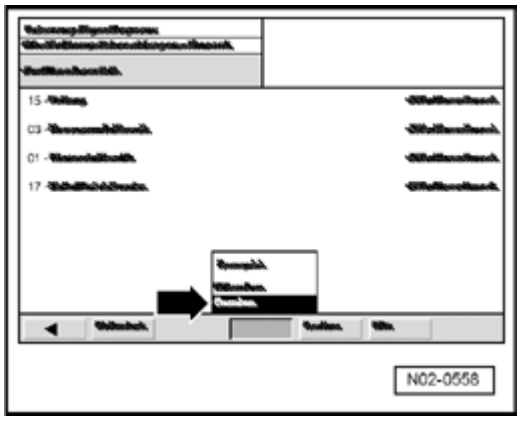

- Switch off ignition and disconnect diagnostic connector.

Door check straps and securing bolts, lubricate

- Lubricate side area of door arrester **- arrow A -** using lubricant G 000 150.

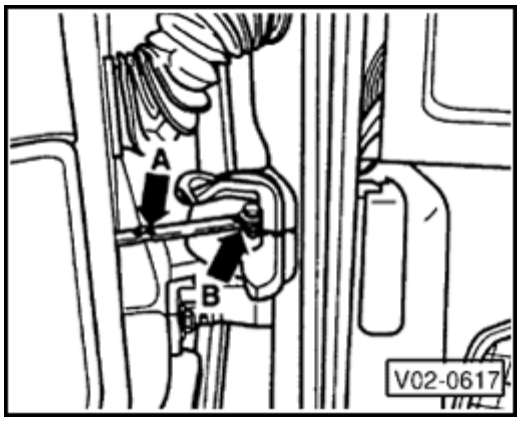

- Lubricate securing bolts **- arrow B -** using lock cylinder grease spray G 400 01.

Sunroof, checking function, cleaning and lubricating guide rails

Perform following work procedure:

- Check function of sunroof.

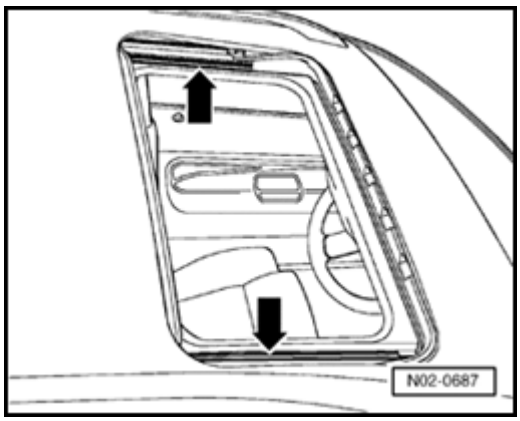

- Clean guide rail **- arrows -** and lubricate using lubricant G 000 450 02.

Windshield wiper/washer system and headlight cleaning system, checking function

Note:

- *If during function test it is determined that wiper blades are juddering or making noises, check pitch angle of wiper blades ⇒ 01-5, Windshield wiper blades, check park position and pitch angle .*

Required special tools and equipment

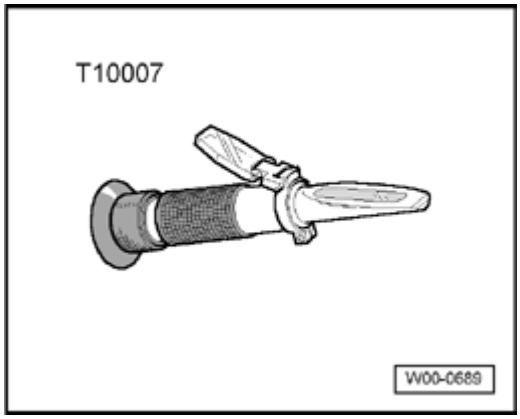

- Refractometer T10007

Check freeze protection protection content of windshield wiper/washer system, top off if necessary

Checking freeze protection protection concentration:

Read bright/dark boundary to obtain an accurate reading for

following tests. Place a drop of water on glass to improve readability of bright/dark boundary. bright/dark boundary can be clearly recognized on "WATERLINE" .

- Check concentration of anti-freeze additive using refractometer T10007 (follow user manual).

Scale **- 1 -** of refractometer is designed specifically for genuine Volkswagen Windshield Clear "G052164" .

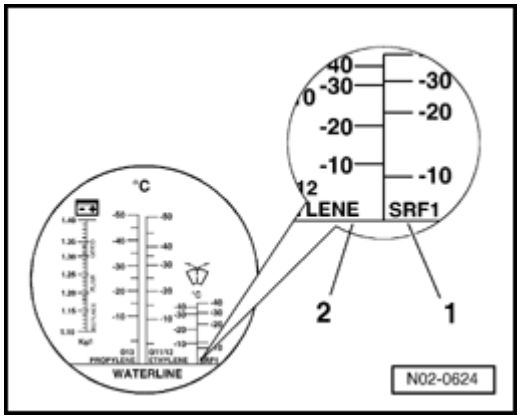

Scale **- 2 -** is designed for commercially available windshield cleanser as well as a mixture of commercially available windshield cleanser and "G052164" .

Mixture ratio:

Free e protection to	Winds ield Clear 052 1 4	Water
1 /0.5 ° F (-17/-18 ° C)	1 part	3 parts
-7.5/-9.5 ° F (-22/-23 ° C)	1 part	2 parts
-34.5/-36.5 ° F(-37/-38 ° C)	1 part	1 part

Topping-off with fluid:

Windshield wash/wipe system fluid reservoir must be filled up to edge.

Use only "Genuine Volkswagen Windshield Clear" all-year-round when topping-up windshield wash/wipe system.

***Note**:*

- *Genuine Volkswagen Windshield Clear G 052 164 protects spray nozzles, fluid reservoir and hoses from freezing.*
- *Fill with genuine Volkswagen Windshield Clear G 052 164 in warmer season also. powerful cleanser removes wax and oil deposits from windows.*

- *Freeze protection must be guaranteed to approx. 5 ° F (-15 ° C) (approx. -31 ° F (35 ° C) in countries with an arctic climate) in windshield washer system.*

Windshield washer system, check jet setting and adjust if necessary

Required special tools and equipment

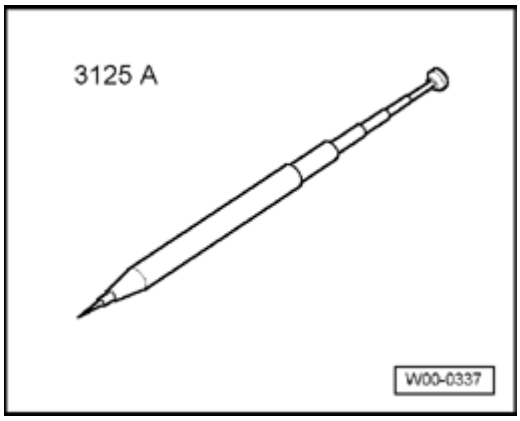

- V.A.G3125A

***Note**:*

- *Never use a needle or a similar object, since it may damage water hoses in spray nozzle*
- *Windshield wash/wipe system fluid reservoir must be filled up to edge.*

- Check jet setting, adjust using V.A.G3125A adjustment tools for windshield wiper nozzle if necessary.

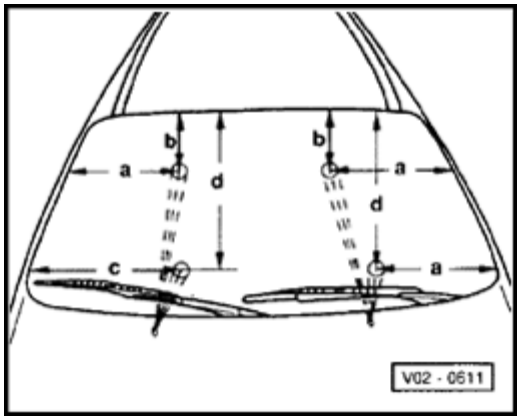

Jet adjustment setting dimensions for windshield:

a	400 mm	c	520 mm

b	300 mm	d	600 mm

Tolerance: ± 20 mm

Jet setting dimension for rear window:

Spray jet, center, wiper area

***Note**:*

- *If spray jet is uneven or cannot be adjusted to specified dimensions, spray nozzle must be replaced (repair measure).*

Headlight cleaning system, check jet setting and adjust if necessary

Required special tools and equipment

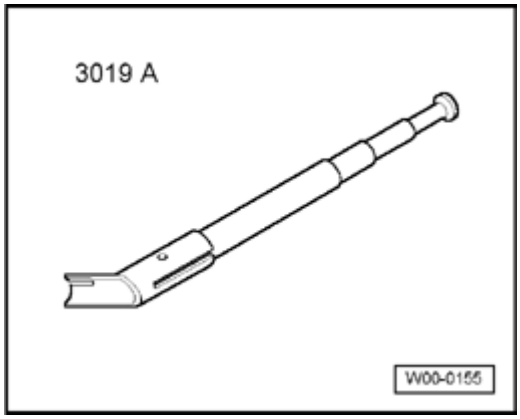

- 3019A adjustment device

- Check jet setting, adjust using 3019A adjustment device if necessary.

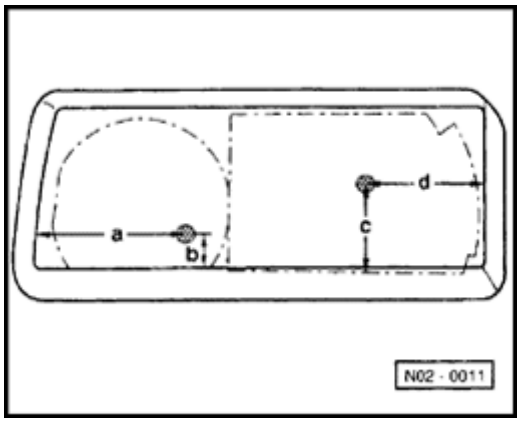

Following jet setting dimensions apply for left headlight (right headlight symmetrical)

Windshield wiper blades, check park position and pitch angle

Windshield wiper blades, check park position and adjust if necessary

Required special tools and equipment

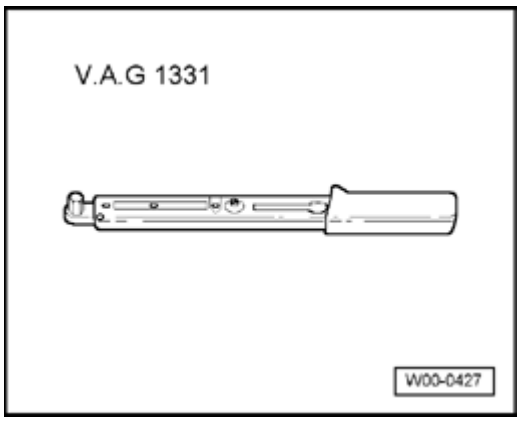

- Torque wrench V.A.G 1331/ (5 - 50 Nm)

Perform following work procedure:

- Check whether wiper blades are in park position.

Windshield:

- A - = 50 mm

- B - = 35 mm

- If necessary, adjust rest position by shifting wiper arms.

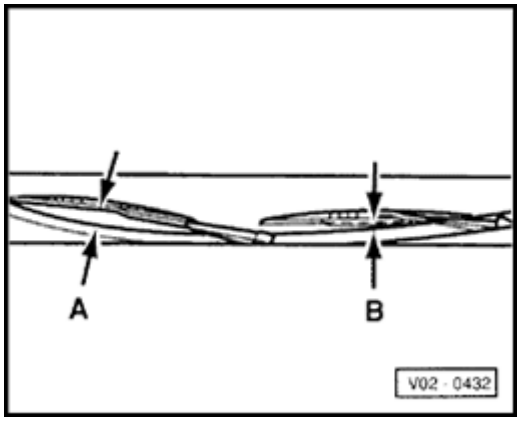

Tightening torque, wiper arms: 20 Nm

Rear window (Wagon):

- a - = 20 mm

- If necessary, adjust park position by shifting wiper arm.

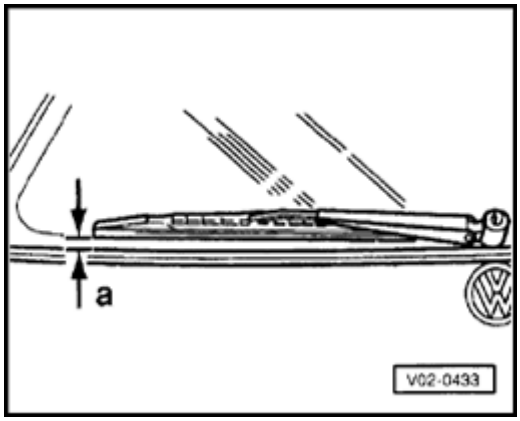

Tightening torque, wiper arm: 16 Nm

Windshield wiper blades: Check pitch angle, adjust if necessary

***Note**:*

- *Check pitch angle only if wiper blades are juddering or making noises.*

Required special tools and equipment

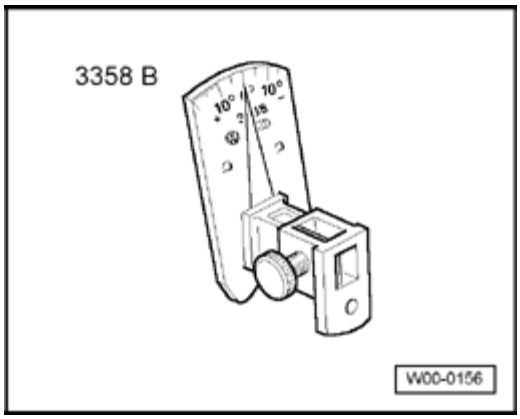

- Windshield wiper adjustment device VAS 3358B
- Open-end wrench 24 mm

Perform following work procedure:

- Bring windshield wiper arms in park position.

- Remove windshield wiper blade.

- Install windshield wiper arm **- 2 -** into Windshield wiper adjustment device VAS 3358B and secure using mounting

screw **- 3 -** .

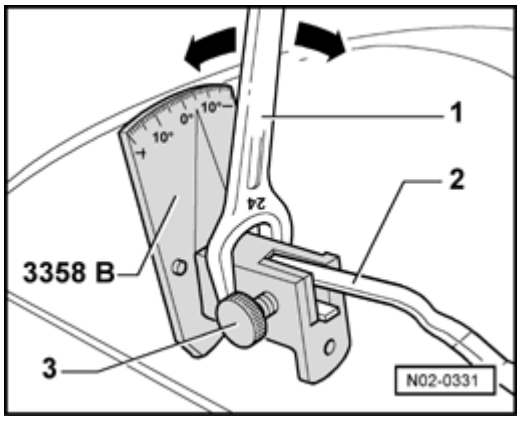

- Check pitch angle.

Pitc angle (specified alues) for	
Driver s side	-2.5 ° / -4 ° 1)
Passenger s side	0 °
Rear wiper	0 °
Tolerance	± 2 °

1) Windshield wiper blade with plastic spoiler (vehicles from 05.94 on)

If necessary, adjust pitch angle to specified value as follows:

- Place open-end wrench 24 mm **- 1 -** onto adjustment device and set windshield wiper arm **- 2 -** to specified value **- arrows -** .

- Remove windshield wiper arm **- 2 -** from adjustment device and secure again using mounting screw **- 3 -** .

- Check adjusted value according to table. If necessary, repeat setting and checking procedure until specified value is reached.

- Remove adjustment device and install windshield wiper blade.

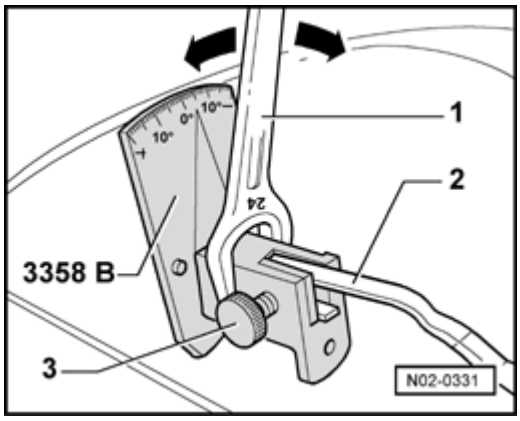

- Check to make sure that windshield wiper system is not juddering.

Checking tire condition, tread wear pattern , filling pressure and tread depth

Note:

- *For reasons of safety only tires of same type and tread pattern should be fitted on a vehicle*

Note:

- *Vehicle must be equipped with tires of same make. Otherwise, This can cause damage because viscous clutch would unnecessarily increase ratio of rear final drive due to rising RPM difference of both axles.*
- *However, different tread depths of front axle and rear axle tires, e.g. due to wear, is harmless. It is recommended, however, to mount tires with greater tread depth in front.*
- *If front wheels are more strongly worn out than rear wheels, they have a smaller rolling circumference and turn therefore faster.*
- *Thus tensions in drivetrain rise and tires wear faster.*

Inspection service:

- Check tires for scuffing, one sided wear, porous side walls, cuts and fractures. It is essential that detected defects are communicated to customer!

Checking tire wear pattern

Tread wear pattern on front tires is an indication of whether toe and camber settings should be checked:

- "Feathering" on tread indicates incorrect toe setting. .
- If tread is worn on one side, this is usually caused by incorrect camber. .

When wear of this nature is noticed, determine cause by performing alignment checks (repair measure).

Tire tread depth (including spare wheel), checking

- Check tread depth

Minimum depth: 1.6 mm

Note:

- *This value may vary for individual countries due to different legislative regulations.*
- *minimum tread depth is reached when tires have worn down level with 1.6 mm high tread wear indicators positioned at intervals around tire.*
- *If tread depth is approaching legal minimum permissible depth, customer must be informed.*

Tire inflation pressure (including spare wheel), checking, correcting inflation pressures

Required special tools and equipment

- Tire pressure gauge

Note:

- *Spare wheels with a rectangular opening in wheel disk do not need to be removed. Filler valve must be reached through opening.*
- *Pressures listed in table are valid for cold tires. Do not reduce increased pressures on warm tires.*

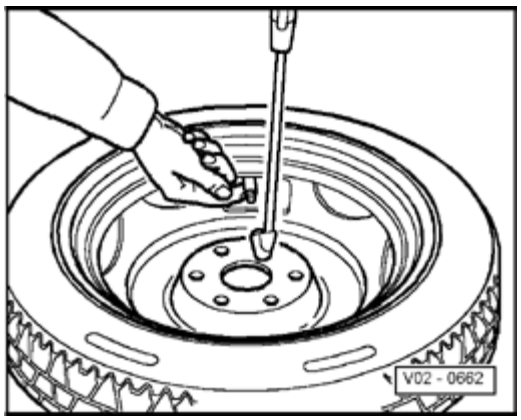

- *Important information concerning winter tires recommended by Volkswagen is found in Fault finding Wheels, tires Chapter 4 No. 2 .*

Tire inflation pressure table for normal tires

(For all factory installed tire sizes)

Filling pressure values in bar

	alf load front	rear	Full load front	rear
Vehicles with gasoline engine				
55 kW and 66 kW				
Sedan	2.0	2.0	2.2	2.6
Wagon	2.0	2.0	2.2	2.8
74 kW and 85 kW				
Sedan	2.2	2.2	2.4	2.7
Wagon	2.2	2.2	2.4	3.0
110 kW				
Sedan	2.6	2.6	2.8	3.1
Wagon	2.6	2.6	2.8	3.4
128 kW				
Sedan	2.6	2.6	2.8	3.1
Wagon	2.6	2.6	2.8	3.4
135 kW Synchro				
Sedan	-	-	-	-
Wagon	2.6	2.8	2.8	3.4
110 kW				
Sedan	2.6	2.6	2.8	3.1
Wagon	2.6	2.6	2.8	3.4
128 kW				
Sedan	2.6	2.6	2.8	3.1
Wagon	2.6	2.6	2.8	3.4
Vehicles with Diesel engine				
55 kW				
Sedan	2.0	2.0	2.2	2.6

Wagon	2.0	2.0	2.2	2.8
66 kW				
Sedan	2.2	2.2	2.4	2.7
Wagon	2.2	2.2	2.4	3.0
81 kW				
Sedan	2.4	2.4	2.6	2.9
Wagon	2.4	2.4	2.6	3.2
Spare wheel	4.2			
Regular wheel	Meet highest intended inflation pressure for vehicle.			

Engine oil level, checking

After switching engine OFF, wait at least 3 minutes to allow oil to flow back into pan.

- Remove dipstick, wipe with a clean cloth and reinsert as far as stop.

Note:

- *Observe disposal regulations*

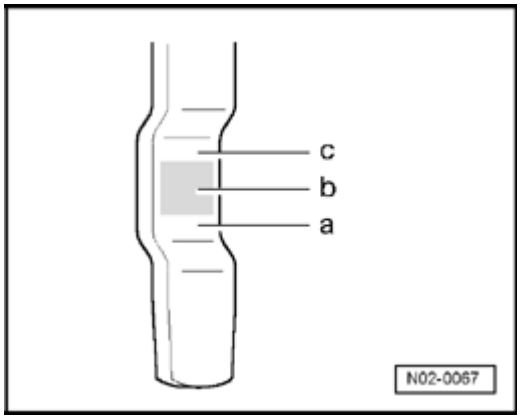

- Remove dipstick again and read oil level:

Area a il must be topped off. After ard, it is sufficient if oil le el is some ere in area - b - - .

Area b - Oil need not be topped off.

Area c - Oil must not be topped off.

Note:

- *At an oil level above area **- c -** , there is a danger of damage to catalytic converter.*

Engine oil, changing and replacing oil filter

Required special tools and equipment

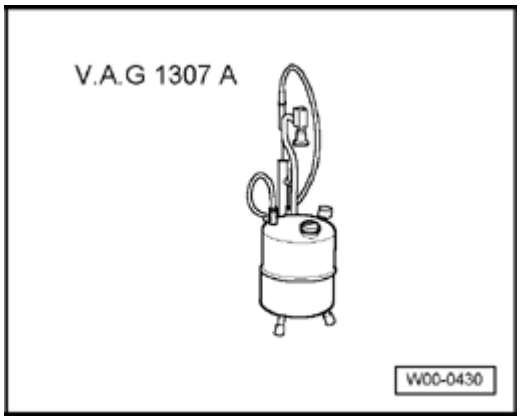

- Oil extractor V.A.G 1307 A

or

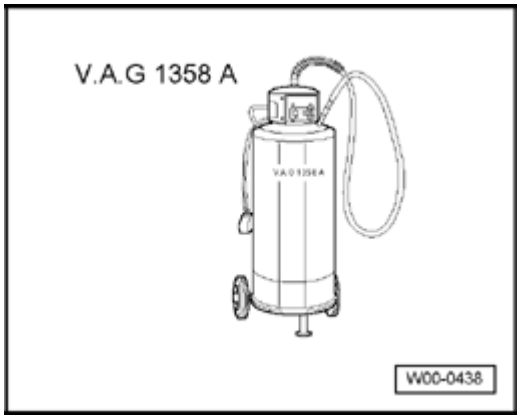

- Oil extractor V.A.G 1358 A

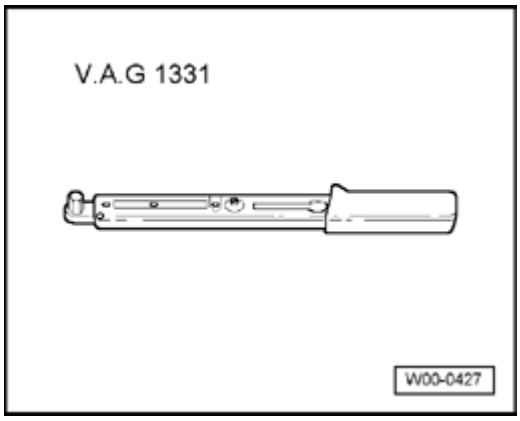

- Torque wrench V.A.G 1331/ (5 - 50 Nm)

Note:

- *If oil is drained and not extracted using oil extractor V.A.G 1307 A or oil extractor V.A.G 1358 A , replace gasket for oil drain plug.*
- *Observe disposal regulations*

Capacities with filter change: ⇒ *for emissions test*

Tightening torque for drain plug:

- 4-cyl. engines: 30 Nm
- 6-cyl. engines: 50 Nm

Oil filter, replacing

4-cyl. engine

***Note**:*

- *Observe disposal regulations*

- Loosen oil filter using tension strap (e.g. Hazet 2171-1) and remove oil filter.

- Clean engine sealing surface.

- Lubricate rubber seal lightly with oil.

- Install new filter element and tighten hand-tight.

6-cyl. engine

***Note**:*

- *Observe disposal regulations*

- Drain oil at drain plug.

- Remove filter lower part using tool.

- Install new filter element and new O-ring (oiled).

- Tighten filter lower part with 25 Nm and drain plug with new sealing ring with 10 Nm.

Engine oil, filling

Oil capacities with filter change: ⇒ *Emissions test*

Due to positive properties of oils (⇒ 01-5, Oil properties) use only following approved engine oils:

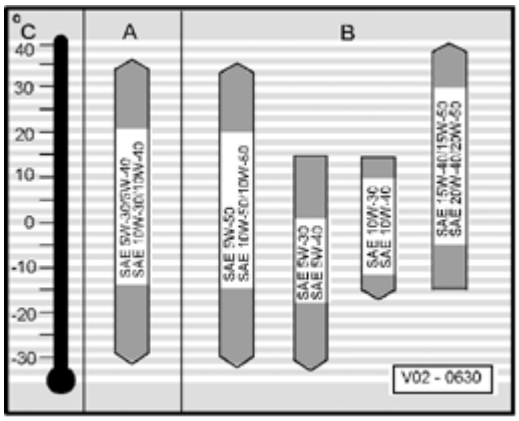

Gasoline engine specifications:

A - Multi-grade light duty oils, specification VW 500 00 or VW 502 00

B - Multi-grade oils, specification VW 501 01

- Multi-grade oils, specification API-SF or SG

)These oils may only be used in exceptional cases if no approved engine oil is available.

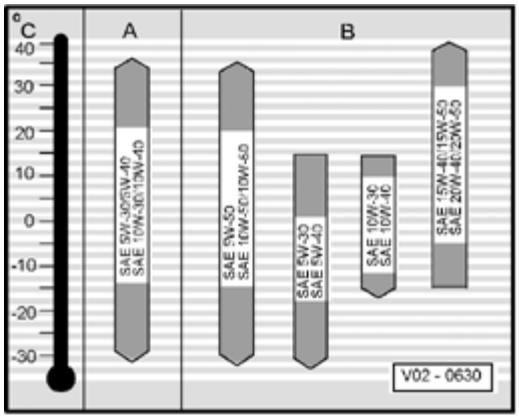

Specification for Diesel engines

A - Multi-grade light duty oils, specification VW 500 00

B - Multi-grade oils, specification VW 505 00 (suitable for all Diesel engines without restrictions)

- Multi-grade oils, specification API-CD

- Multi-grade oils, specification VW 501 01

-

Continuation for all engines

Turbo-engines: After engine oil and oil filter are replaced, following must be considered after first engine start:

- As long as oil pressure warning light in instrument panel is lit, engine may run only at idle. Do not accelerate! Throttle bursts may damage turbocharger or cause it to fail completely.

- Only when warning light goes out, full oil pressure is reached, and driver may accelerate.

- After topping off with oil wait at least 3 minutes then check oil level.

- Pull out oil dipstick, wipe off with a clean cloth and re-insert dipstick again up to stop.

***Note**:*

- *Observe disposal regulations*

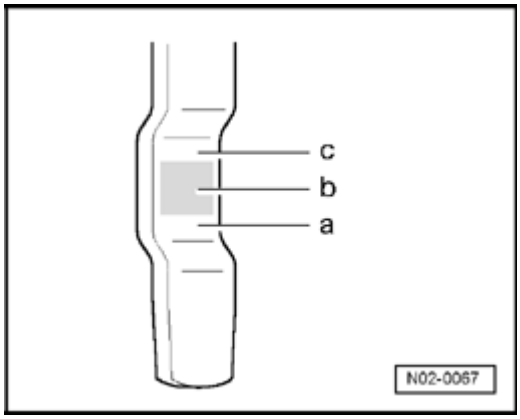

- Withdraw dipstick and read oil level:

Area a il must be topped off. After ard, it is sufficient if oil le el is some ere in area - b - - .
Area b - Oil need not be topped off.
Area c - Oil must not be topped off.

***Note**:*

- *At an oil level above area **- c -** , there is a danger of damage to catalytic converter.*

Oil properties

Multi-grade oils conforming to VW standard 501 01 and 505 00 are oils with following properties:

- All-season usability in moderate climate zones.
- Excellent cleanability.

- Secure lubrication properties at all engine temperature and load conditions.
- High resistance to aging.

Multi-grade light duty oils according to VW standard 500 00 exhibit beyond that following advantages:

- All-season usability at almost all occurring outside temperatures.
- Smaller friction losses of engine.
- Optimum cold starting ability, also at very low temperatures.

Multi-grade light duty oils according to VW standard 502 00:

This oil suitable for gasoline engines corresponds to VW standards 501 00, 505 00 as well as 500 00 and additionally exhibits further advantages: It is particularly suitable for application with more strenuous operating conditions, e.g. difficult road conditions, predominant use of trailer, high portion of uphill driving and driving in hot climate zones.

***Note**:*

- *Single-range oils are generally not all year round usable because of their limited viscosity range. These oils should be used therefore only in extreme climate zones.*
- *When using Multi-grade oil SAE 5 W-30, continuously high engine speeds and constant strong load must be avoided. This restriction does not apply to multi-grade light duty oils.*

Engine and components in engine compartment (from above and below), check for leaks and damage

Perform visual check as follows:

- Check engine and components in engine compartment for leaks and damage.

- Check hoses, pipes and connections of

  - Fuel system
  - Cooling and heating system
  - Brake system

For leaks, abrasions, porosity and brittleness.

***Note**:*

- *Make sure that all malfunctions detected are repaired within repair measures.*
- *If fluid losses are greater than can be reasonably expected, determine cause and repair (repair measure)*

V-belt, checking condition and tension

Check condition of V-belt:

- Checking:

  - Sub-surface cracks (cracks, core ruptures, cross sectional breaks)
  - Layer separation (top layer, cord strands)
  - Base break-up
  - Fraying of cord strands
  - Flank wear (material wear, frayed flanks, flank brittleness -glassy flanks-, surface cracks)
  - Traces of oil and grease

***Note**:*

- *It is essential to replace V-belt if malfunctions are found. This will avoid possible break-downs or operating problems. replacement of ribbed belt is a repair measure.*

V-belt tension, checking and adjusting

- Check V-belt tension by strong thumb pressure (depth of impression approx. 5 mm) and adjust if necessary.

For following adjustment torque wrench V.A.G 1410/ in connection with ring- insertion tool (A/F 22 mm) V.A.G 1410/2 **- A -** is particularly suitable.

- Loosen bolts **- 1 -** and **- 2 -** , clamping screw **- 3 -** and mounting nut **- 4 -** for clamps (if available) at least one turn.

- Tension V-belt to 4 Nm by turning tension nut using torque wrench (run-in belt), and tighten clamping screw **- 3 -** of tension nut to 25 Nm.

- Tighten mounting bolt **- 1 -** for pump to 45 Nm.

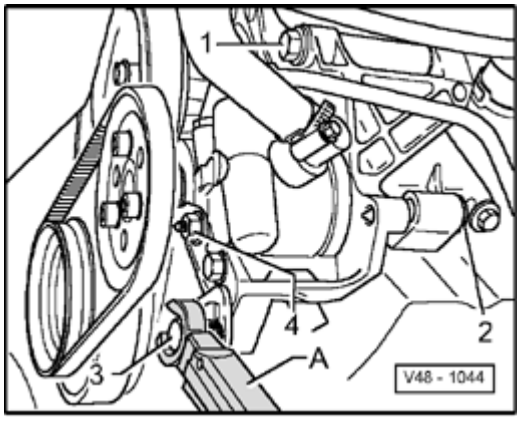

- Tighten mounting bolt **- 2 -** for pump and mounting nut **- 4 -** for clamps (if available) to 25 Nm.

Ribbed belt, Check condition and tension (engines without automatic tensioning roller)

Checking condition of ribbed belt:

- Checking:

- Sub-surface cracks (cracks, core ruptures, cross sectional breaks)
- Layer separation (top layer, cord strands)
- Base break-up
- Fraying of cord strands
- Flank wear (material wear, frayed flanks, flank brittleness -glassy flanks-, surface cracks)

- Traces of oil and grease

***Note**:*

- *It is essential to replace ribbed belt if malfunctions are found. This will avoid possible break-downs or operating problems. replacement of a ribbed belt is a repair measure.*

Tensioning ribbed belt:

***Note**:*

- *With engines with tensioning roller, stretching of ribbed belt is not required, since by a spring-loading tensioning device correct tension of belt is always ensured.*

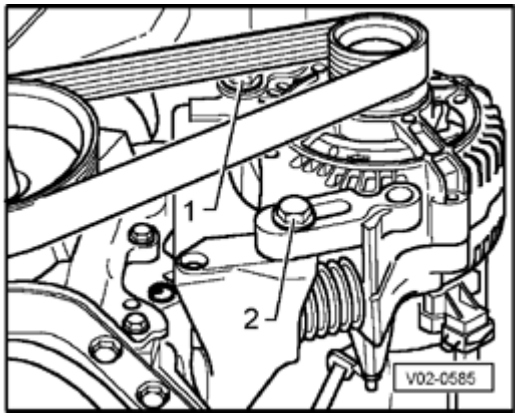

- Loosen mounting bolts **- 1 -** and **- 2 -** for generator at least one turn.

- Press down generator at least three times up to stop using Clamping lever 3297 , in order to ensure optimal freedom of movement.

- With generator still disconnected, let engine run at idle for at least 10 seconds.

***Note**:*

- *Next, note tightening order when tightening bolts for generator. Do not lean on generator and do not touch ribbed belt.*

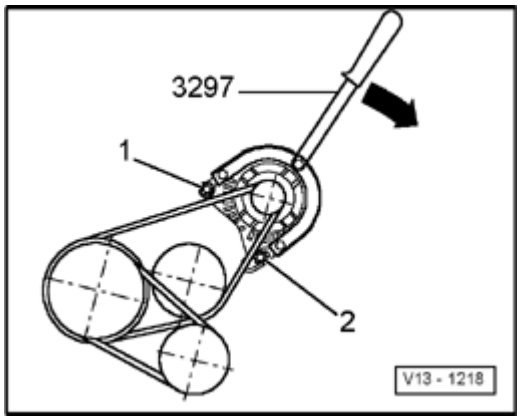

- Tighten first mounting bolt **- 2 -** , then mounting bolt **- 1 -** to 25 Nm.

Front manual transmission/final drive, check oil level

- Remove bolt **- arrow -** .

- Check oil level: Oil level should reach lower edge of oil filler hole.

- If necessary, top-up transmission fluid "specification G 50 SAE 75W90 (synthetic oil)" .

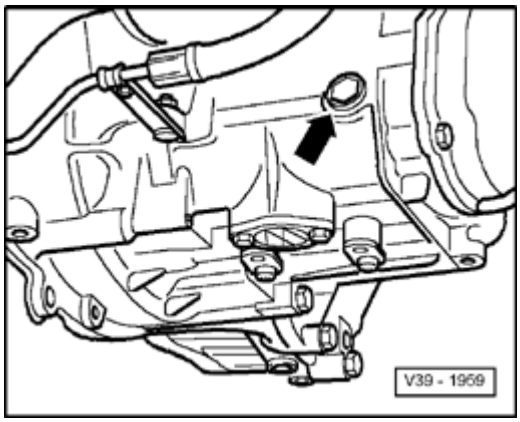

- Install bolt **- arrow -** .

Rear final drive (Syncro): Check oil level

Transmission fluid specification G 50 SAE 75W90 (synthetic oil)

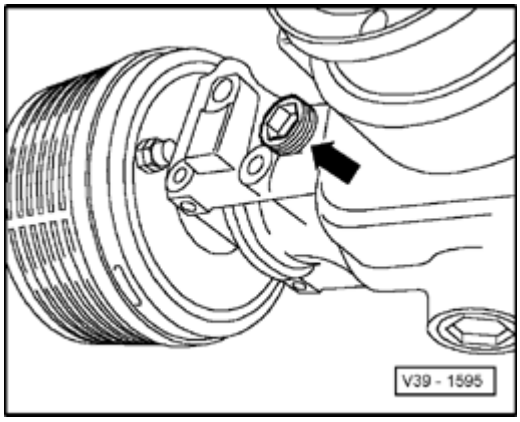

- Unthread bolt for checking transmission fluid **- arrow -** .

Oil level is correct when the rear final drive is filled up to lower edge of oil filler hole.

- Screw in bolt **- arrow -** .

When filling anew, note the following:

- Unthread bolt **- arrow -** .

- Top up transmission fluid to lower edge of oil filler hole.

- Screw in bolt **- arrow -** .

Automatic transmission, check final drive oil level

***Note**:*

- *Observe disposal regulations*

- Remove drive for speedometer, wipe off with a cloth, and install drive again.

- Remove drive and check oil level.

Oil level must be between min. and max. marking.

***Note**:*

- *Oil capacity between min. and max. marking is 0.1L.*

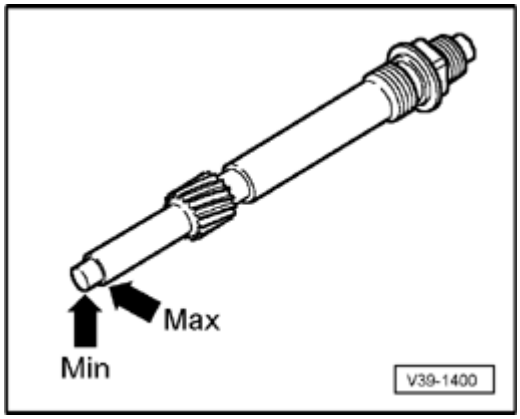

- If oil level is too low, top-off axle oil.

Automatic transmission 096 (until December 1994):

Manufacturing date see side ⇒ 01-5, Transmission identification

SAE 75 W 90 (synthetic)

- Container size 0.5 L - part number G 052 145 A1
- Container size 1.0 L - part number G 052 145 A2

Note:

- *Lubricants SAE 75 W 90 and VW ATF must not be mixed with each other.*

Automatic transmission 01M from anuary 1995 to 8/24/1996:

Manufacturing date see side ⇒ 01-5, Transmission identification

VW-ATF

- Container size 0.5 L - part number G 052 162 A1
- Container size 1.0 L - part number G 052 162 A2

Note:

- *lubricants SAE 75 W 90 and VW ATF must not be mixed with each other.*

Automatic transmission 01M from 8/25/1996:

Manufacturing date see side ⇒ 01-5, Transmission identification

SAE 75 W 90 (synthetic)

- Container size 0.5 L - part number G 052 145 A1
- Container size 1.0 L - part number G 052 145 A2

***Note**:*

- *lubricants SAE 75 W 90 and VW ATF must not be mixed with each other.*

- If oil level is too high, extract oil using Oil siphoning unit V.A.G 1358 A .

- Install drive for speedometer.

Continuation for all vehicles:

Transmission identification

Identification **- arrow 1 -**

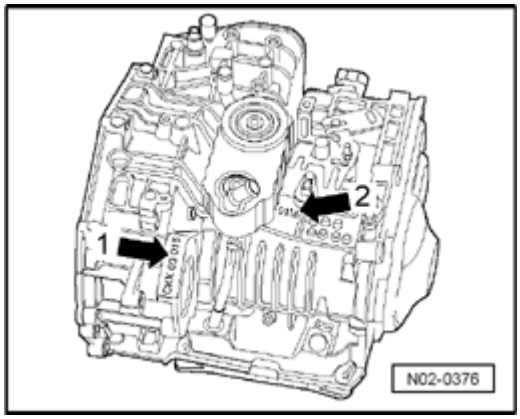

Automatic transmission 01M **- arrow 2 -**

Example:

C	**0**	**01**	**5**
I	I	I	I
Code letters	Day	Month	ear **- 1995 -** of manufacturing

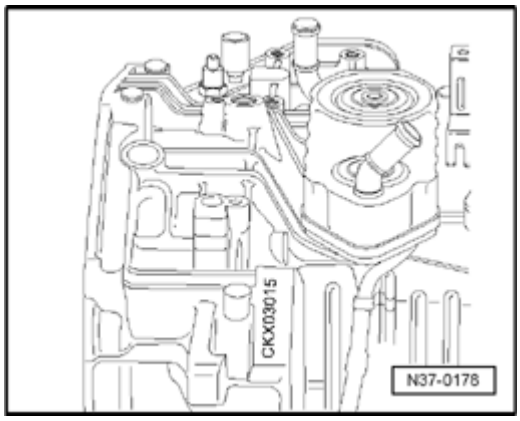

Transmission code letters are also listed on vehicle data plates.

Brake system, visual inspection

- Master brake cylinder, brake booster (with Anti-lock Brake System -ABS-: Hydraulic unit), Check brake pressure regulator, brake caliper for leaks and damage.

- Make sure that brake hoses are not twisted.

- Make sure that brake hoses do not touch any vehicle components when steering is at full lock.

- Check brake hoses for porosity and brittleness, brake hoses and brake lines for abrasions.

- Check brake connections and mounts for proper seating, leakages and corrosion.

Caution!

Malfunctions found must be repaired (repair measure).

Brake pads front and rear, checking thickness

Front disc brake pads:

- Remove a wheel for better judgement of remaining pad thickness. To do so, mark position of wheel in relation to brake disc, and install in same position again after test.

Note:

- *Since pad wear on passenger side can be slightly larger according to experience than on driver s side, it is reasonable to remove front wheel on seat passenger side.*

Required special tools and equipment

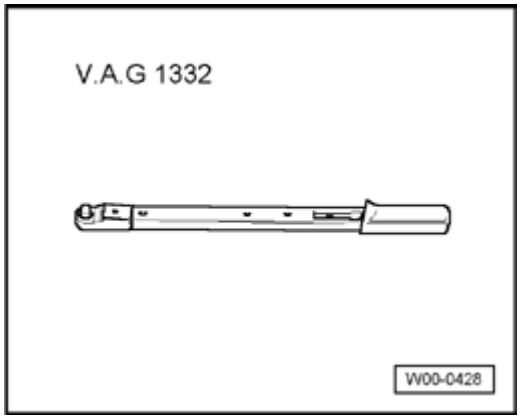

- Torque wrench V.A.G 1332/ (40 -200 Nm)
- Fashlight

Perform following work procedure:

- Measure outer and inner pad thickness.

a - Pad thickness without backing plate

- Wear limit: 2 mm

With a pad thickness of 2 mm (without backing plate) brake pads have reached their wear limit and must be replaced (repair measure).

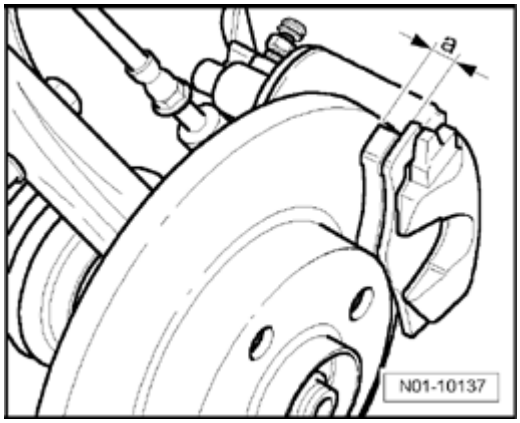

- Mount wheel and tighten wheel securing bolts to 110 Nm.

Rear disc brake pads:

- Determine thickness of outer pad by visual check (using a flashlight through a hole in wheel).

- Determine thickness of inner pad by visual check (using a flashlight through a hole in wheel).

a - Pad thickness including backing plate

- Wear limit: 2 mm

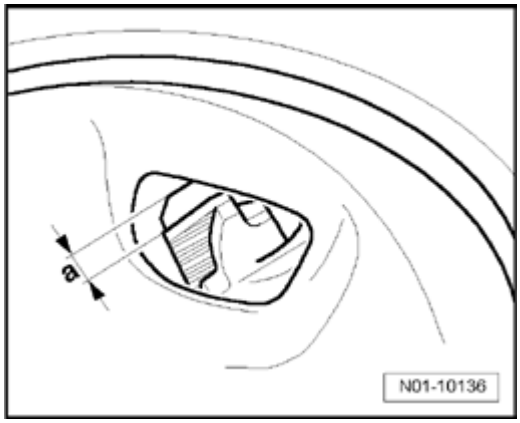

With a pad thickness of 2 mm (without backing plate) brake pads have reached their wear limit and must be replaced (repair measure).

Rear drum brake pads:

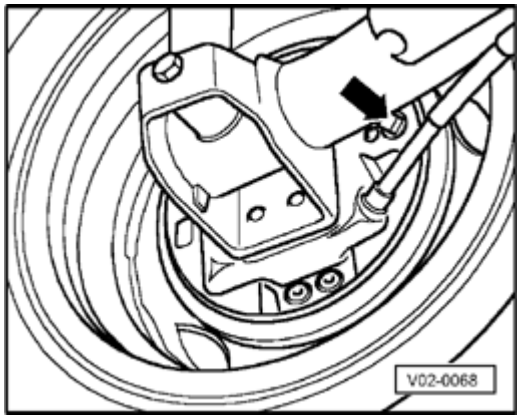

- Check thickness of brake pads through inspection holes in brake carrier metal sheets **- arrow -** .

- Wear limit: 2.5 mm (only pad thickness)

Note:

- *Pay attention to pads smeared with brake fluid or fat.*

Underbody sealant, checking

When performing visual inspection for damage to underbody sealant, also check underbody, wheel housings and sill panels.

Note:

- *Malfunctions found must be repaired (repair measure). This inhibits corrosion and rusting through.*

Tie rod ends, checking

Perform following work procedure:

- With vehicle raised (wheels hanging free), check play by moving tie rods and wheels **- arrow -** . Play: zero play

- Check mountings.

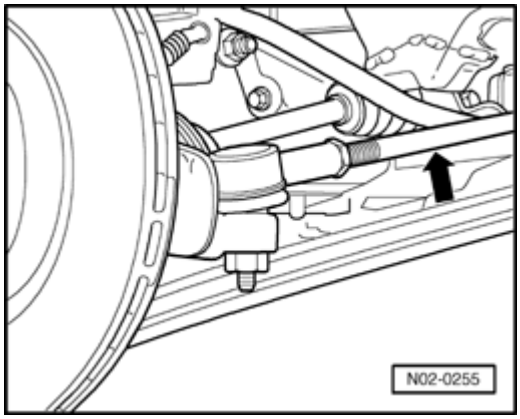

- Check joint boots for damage and proper seating.

Ball joints, checking

Perform following work procedure:

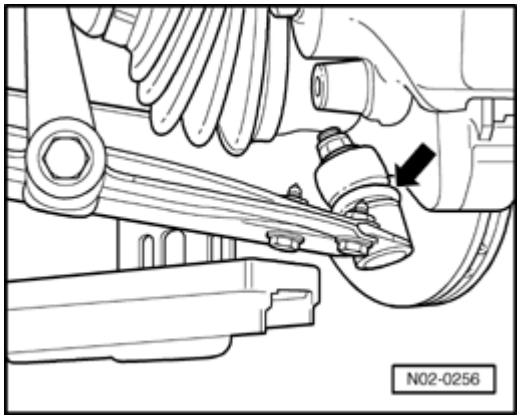

- Check joint boots **- arrow -** of ball joints for leaks and damage.

Cooling system anti-freeze protection and coolant level, checking

Make sure that coolant additive G 12 (color red) can be already filled in. When adding coolant, use only coolant G

12 according to TL "VW 774 D" .

Some vehicles are filled with coolant additive G 11 (color green). When adding coolant, use only coolant G 11 according to TL "VW 774 D" . If these vehicles were filled with G 12 for repairs, only G 12 may be refilled.

Caution!

- ***Coolant additives G 11 and G 1 must never be mixed.***
- ***If fluid in expansion tank is brown, G1 or G 11 has been mixed with another coolant additive. In this case, coolant must be replaced immediately (repair measure)! If coolant is not changed, serious malfunctions or damage to engine can occur!***

Cooling system anti-freeze protection and coolant level, checking

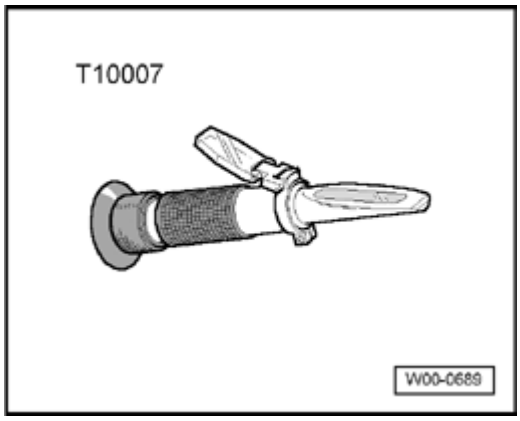

Required special tools and equipment

- Refractometer T10007

Note:

- *Read bright/dark boundary to obtain an accurate reading for following tests. Place a drop of water on glass to improve readability of bright/dark boundary. bright/dark boundary can be clearly recognized on WATERLINE .*

- Check concentration of coolant additive using refractometer T10007 (follow user manual).

scale **- 1 -** of refractometer is designed for coolant additives -G 12- according to TL "VW 774 D" and -G 11- according to TL "VW 774 C" .

scale **- 2 -** is designed for coolant additive -G 13-.

Note:

- *Coolant additive G 13 is currently used only in vehicles of type L 80 .*
- *Freeze protection additives protect against frost to about -25 C (about -35 C in arctic climates).*
- *If for climatic reasons greater freeze protection protection is required, amount of G 12 can be increased, but only up to 60 (freeze protection protection to about -40 ° C), otherwise freeze protection protection and cooling effectiveness will be reduced.*

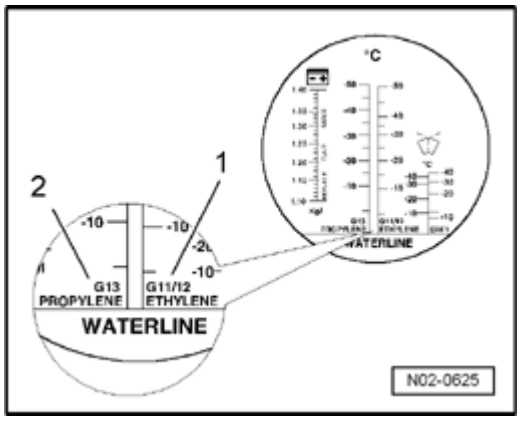

- If freeze protection protection is insufficient, drain off required quantity shown in freeze protection protection table (⇒ 01-5, Freeze protection protection table) and add coolant additive G 11 or G 12.

Note:

- *Observe disposal regulations*

Freeze protection protection table

- Check coolant additive concentration after test drive again.

Free e protection protection to ° C (F)		uantity difference in Liters	
Actual value	Specified value	4-cyl. engine	6-cyl. engine

0 (32)	-25 (-13)	3.5	5.0
	-35 (-31)	4.0	6.0
-5 (23)	-25 (-13)	3.0	4.5
	-35 (-31)	3.5	5.5
-10 (14)	-25 (-13)	2.0	3.5
	-35 (-31)	3.0	4.5
-15 (5)	-25 (-13)	1.5	2.5
	-35 (-31)	2.0	3.5
-20 (-4)	-25 (-13)	1.0	1.5
	-35 (-31)	1.5	2.5
-25 (-13)	-35 (-31)	1.0	1.5
-30 (-22)	35 (-31)	0.5	1.0
-35 (-31)	-40 (-40)	0.5	0.5

Checking coolant level and adding coolant if necessary

- Check coolant level in expansion tank with engine cold.

- Delivery inspection: Coolant level at max. marking.
- Inspection service: Coolant level between min. and max. marking.

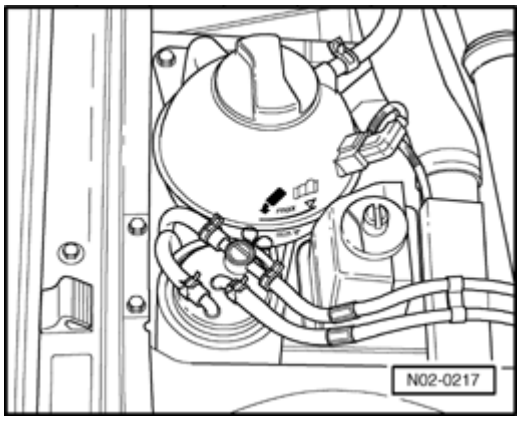

- If coolant is too low, add required amount according to mixture ratio.

Note:

- *If fluid losses are greater than can be reasonably expected, determine cause and repair (repair measure)*

Mixture ratio:

Free e protection protection to Coolant additi e Water

-25 C (-13 F)	approx. 40	approx. 60
-35 C (-31 F)	approx. 50	approx. 50
-40 C (-40 F)	approx. 60	approx. 40

***Note**:*

- *Coolant additives G 11 or G 12 prevent frost and corrosion damage, scaling and also raises boiling point of coolant. Therefore, cooling system must be filled year round with frost and corrosion protection additives.*
- *A higher boiling point improves engine reliability under heavy load particularly in countries with tropical climates.*

Spark plugs, replacing

Spark plug identification and replacement intervals ⇒ *Emissions Test*

Required special tools and equipment

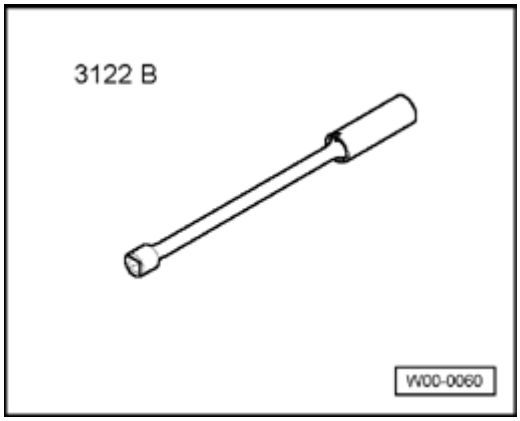

- Spark plug removal tool VAS 3122B

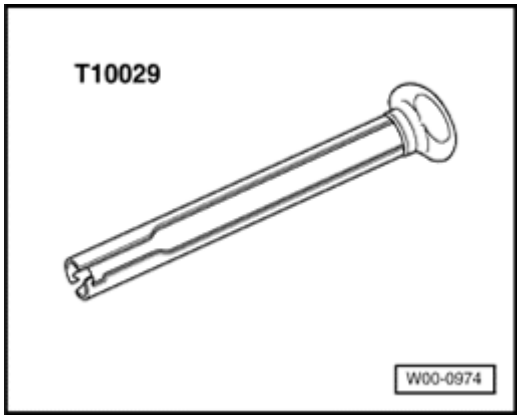

- Assembly tool T10029

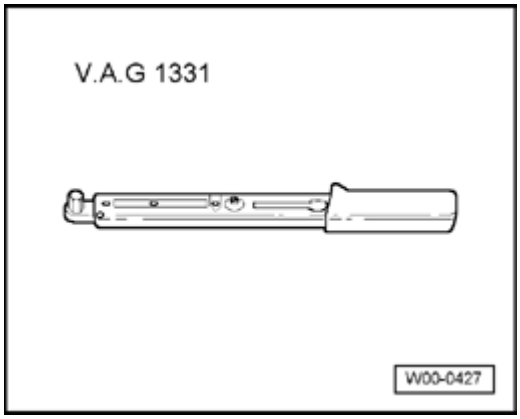

- Torque wrench V.A.G 1331/ (5 - 50 Nm)
- Emissions Test binder

Perform following work procedure:

- Disconnect spark plug connectors using assembly tool T10029 .

- Remove spark plugs using spark plug removal tool VAS 3122B .

***Note**:*

- *Spark plug identification and tightening torque ⇒ Emissions Test*
- *Observe disposal regulations*

- Install new spark plugs using spark plug removal tool VAS 3122B .

- Connect spark plug connectors using assembly tool T10029 .

- Check ignition wires and spark plug connectors for secure seating.

Dust and pollen filter element, replacing

Filter is located below plenum chamber on right.

Perform following work procedure:

Removing

- Turn buttons **- 1 -** for mounting of cover around 45 ° and remove cover from partition to engine compartment.

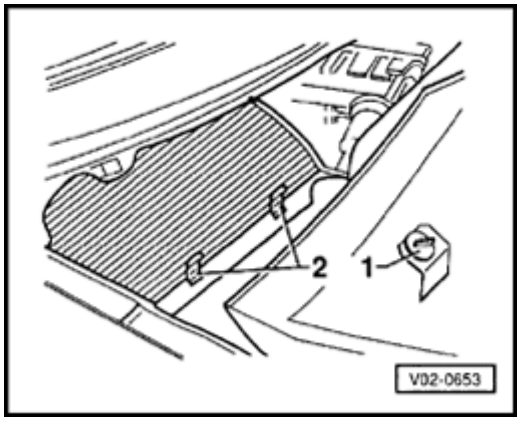

- Unlock spring latches **- 2 -** of filter element, remove filters upward.

***Note**:*

- *Observe disposal regulations*

Installing

- Install new filter element.

- Install rubber seal and cover.

Toothed belt for camshaft drive: (Diesel engine code AA), Ccheck condition and tension

- Performing work procedure ⇒ *4-cyl. Diesel Engine, Mechanical Repair Group 13 Crankcase, disassembling and assembling, toothed belt, removing and installing, tensioning*

Toothed belt and toothed belt tensioning roller (Diesel engine codes AFN and 1), replacing

- Performing work procedure ⇒ *4-cyl. Diesel Engine, Mechanical Repair Group 13 Crankcase, disassembling and assembling, toothed belt, removing and installing, tensioning*

Toothed belt for camshaft drive (gasoline engine), check condition and tension

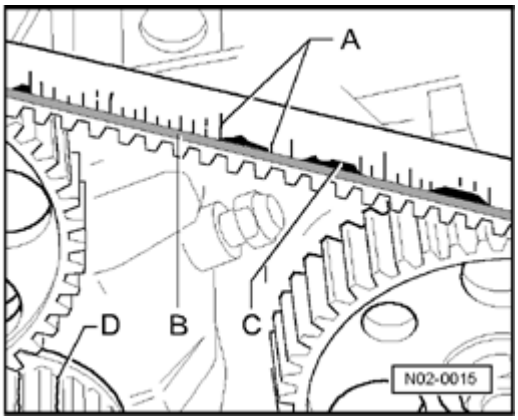

Condition of toothed belt must be checked for:

- Cracks or tears **- A -** , cross sectional breaks
- Lateral scouring **- B -**
- Fraying and/or outbreaks **- C -**
- Tears in tooth base **- D -**
- Layer separation (toothed belt carcass, cord strands)
- Traces of oil and grease

Note:

- *It is essential to replace toothed belt if malfunctions are found. This will avoid possible break-downs or operating problems. replacement of a toothed belt is a repair measure.*

Check tension of toothed belt, and tension toothed belt if necessary

Work descriptions can be found in corresponding

⇒ *Repair Manual, Engine Mechanical, Repair Group 15, Cylinder Head, Valvetrain*

Toothed belt, check wear (TDI engines)

Required special tools and equipment

- Caliper (commercially available)

Perform following work procedure:

- Open clips of upper toothed belt protection.

- Pull upper toothed belt protection forward or remove it if necessary.

- Measure width of toothed belt using a caliper.

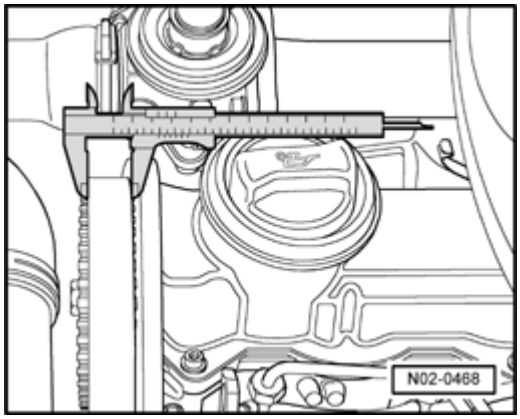

- Wear limit: 22 mm

Note:

- *With a toothed belt width of 22 mm toothed belt has reached its wear limit and must be replaced (repair measure). Inform customer*

Fuel filter, replacing (diesel engine)

Note:

- *Make sure that diesel does not come in contact with coolant hoses. Clean hoses immediately if necessary*

- *Observe disposal regulations*

Perform following work procedure:

Removing

- Remove retaining clamp **- 5 -** .

- Remove regulating valve with attached fuel lines.

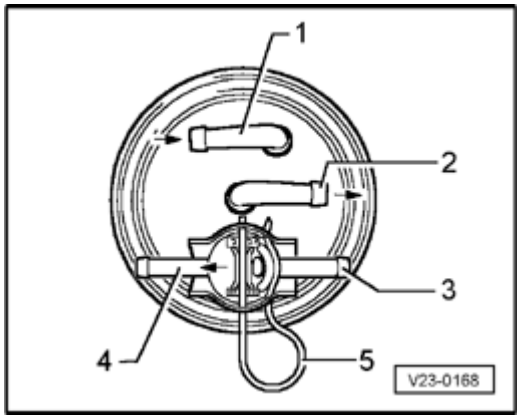

- Disconnect fuel hoses from hose connections **- 1 -** and **- 2 -** .

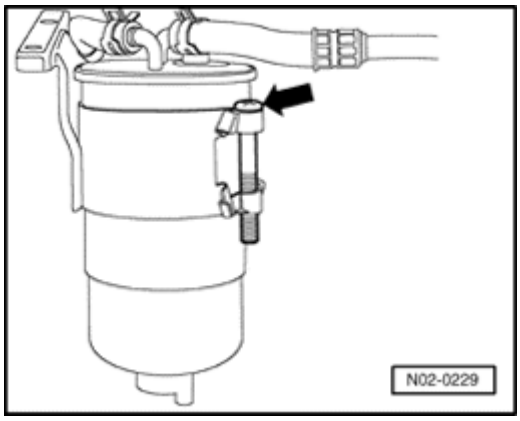

- Loosen bolt **- arrow -** at filter mounting pull out filter upward.

Installing

- Install new O-ring for sealing of regulating valve.

Note:

- *flow direction of fuel is marked at connections by arrows (please do not exchange connections).*

- Fill new filter with clean diesel fuel. Thus engine can be started faster.

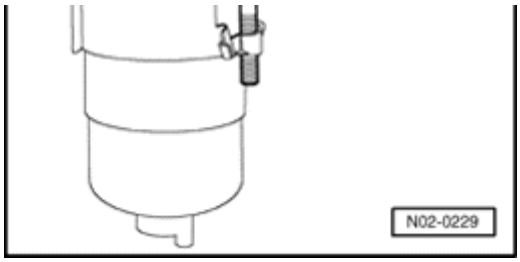

- Slide filter downward through filter mounting and fasten it at bolt **- arrow -** .

- Install regulating valve with attached fuel lines.

- Install retaining clamp **- 5 -** .

- Slide fuel hoses across hose connections **- 1 -** and **- 2 -** , and secure hoses using hose clamps.

- Check fuel system for proper seal (visual check).

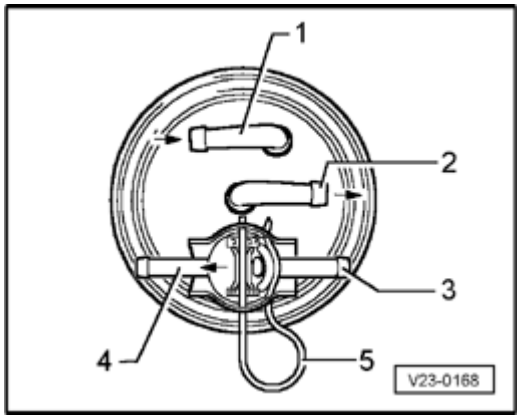

- Accelerate several times, afterwards fuel must flow without bubbles through transparent hose at idle.

Fuel filter, draining water (Diesel engine)

***Note**:*

- *Make sure that diesel does not come in contact with coolant hoses. Clean hoses immediately if necessary*
- *Observe disposal regulations*

Perform following work procedure:

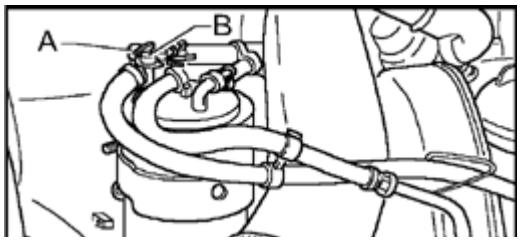

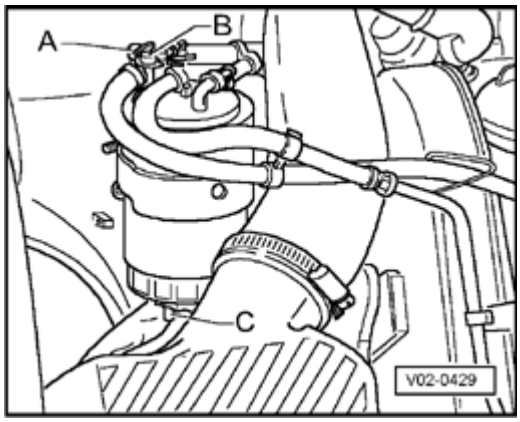

- Remove retaining clamp **- A -** and regulating valve **- B -** with fuel hoses attached.

- Connect hose at connection sleeve of dewatering bolt **- arrow -** , remove bolt, and drain approx. 0.1L of fluid.

- Tighten dewatering bolt **- arrow -** and disconnect hose.

- Install new O-ring for sealing of regulating valve.

- Install regulating valve and attach retaining clamp.

- Check fuel system for proper seal (visual check).

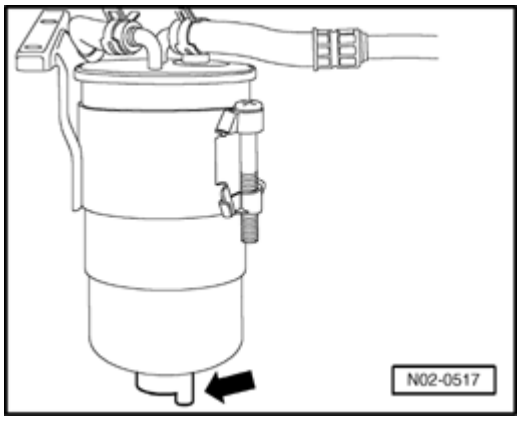

- Accelerate several times. Afterwards, fuel must flow without bubbles through transparent hose at idle.

Automatic transmission, Checking ATF level

Vehicles 01.95 ➢ with 01M transmissions

Required special tools and equipment

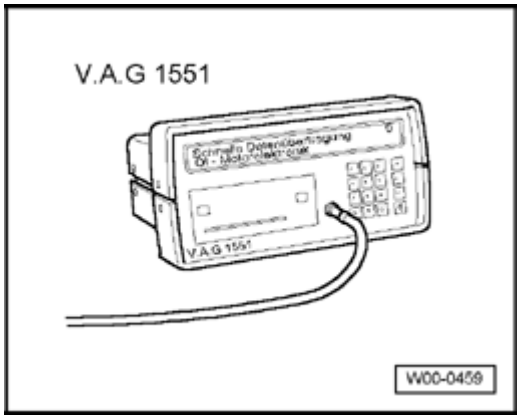

- VAG1551 Scan Tool (ST) V.A.G 1551/

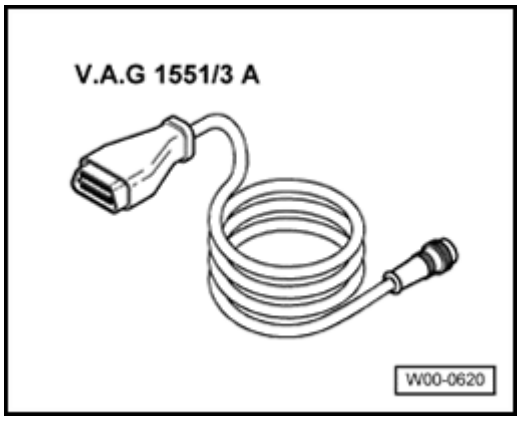

- adapter cable V.A.G 1551/3 A

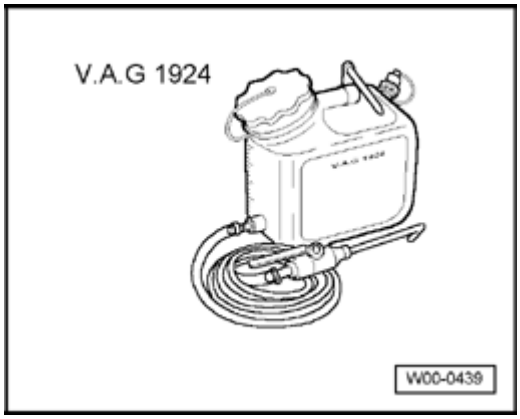

- ATF filler tool V.A.G 1924/

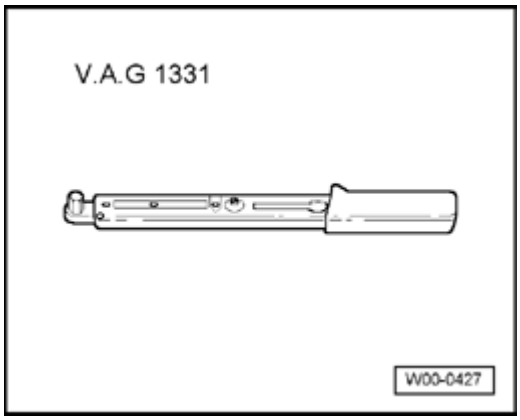

- Torque wrench V.A.G 1331/ (5 - 50 Nm)

Test requirements

- Transmission not in emergency running mode, ATF temperature not above approx. 30 ° C
- Vehicle on level ground.
- Selector lever in "P"

Perform following work procedure:

- Secure container of ATF filler tool V.A.G 1924/ to vehicle.

Connect Scan Tool (ST) V.A.G 1551/ using adapter cable V.A.G 1551/3 A (⇒ 01-5, Connecting scan tool VAG 1551:).

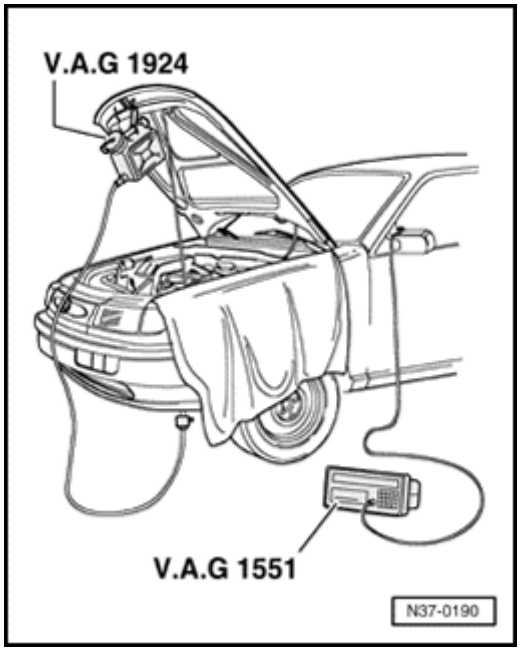

At Scan Tool (ST) V.A.G 1551/ :

Indicated on display:

VAG - On Board Diagnostic (OBD) HELP
1- Rapid data transfer*

or

VAG - On Board Diagnostic (OBD) HELP
2- Blink code output*

* Two operating modes are displayed alternately

- Press button -1- to select "Rapid data transfer" operating mode.

Indicated on display:

Rapid data transfer HELP
Enter address word XX

- buttons 0 and 2 press. "02" is address word for "Transmission Electronics" .

Indicated on display:

Rapid data transfer Q
02 Transmission Electronics

- Press Q button to confirm input.

Indicated on display:

01M927733BB AG4 Transmission 01M 2029
Coding 00000 WSC 00000

control module identification, coding, and Workshop Code (WSC) of Scan Tool (ST) V.A.G 1551/ are indicated:

If displayed:

Control module not responding! HELP

- Press HELP button to print out an overview of all of possible malfunction causes.

- Enter address word 02 for Transmission Electronics again after repairing malfunction and press Q button to confirm.

Indicated on display:

01M927733BB AG4 Transmission 01M 2029
Coding 00000 WSC 00000

- → Press button.

- Raise vehicle.

- Place appropriate receptacle underneath transmission.

Indicated on display:

Rapid data transfer HELP

Select function XX

- Buttons 0 and 8 press. (Press 08 to select "Read measuring value block" function.)

Indicated on display:

Rapid data transfer Q

08 - Read measuring value block

- Press Q button to confirm input.

Indicated on display:

Read measuring value block

Enter display group number XXX

- Press buttons -0-, -0- and -5-. (Press 005 to select "Display group number 005" .)

Indicated on display:

Read measuring value block Q

Enter display group number 005

- Press Q button to confirm input.

Indicated on display:

Read measuring value block 5 -

30 ° C 0011011 0 900 RPM

First display field displays ATF temperature.

- Bring ATF to test temperature.

Test temperature: 35 ° C to 45 ° C

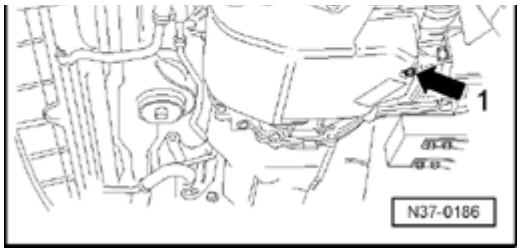

- For ATF test remove locking bolt **- arrow -** in oil pan.

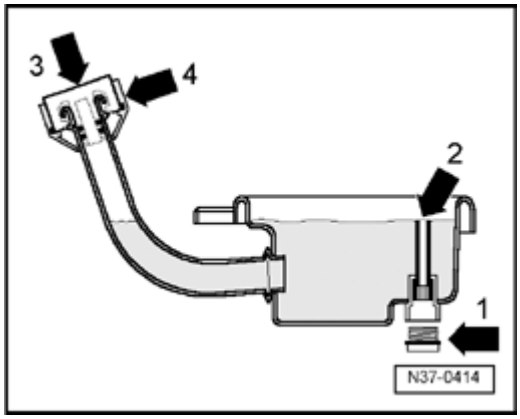

ATF present in overflow tube **- arrow 2 -** runs off.

If ATF drips from hole:

ATF must not be topped off.

- Cut seal **- arrow -** of locking bolt with a side cutter and remove seal.

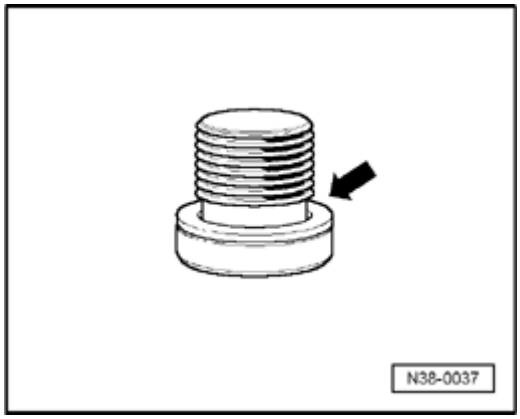

- Install locking bolt with new seal and screw in hand-tight.

- Tighten locking bolt **- arrow 1 -** with new seal to 15 Nm

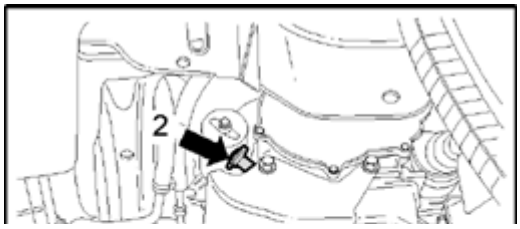

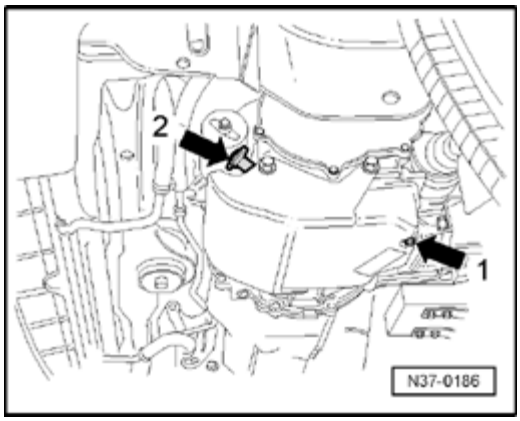

- End Output ⇒ 01-5, End Output .

If ATF in overflow tube runs out of hole:

Top off ATF

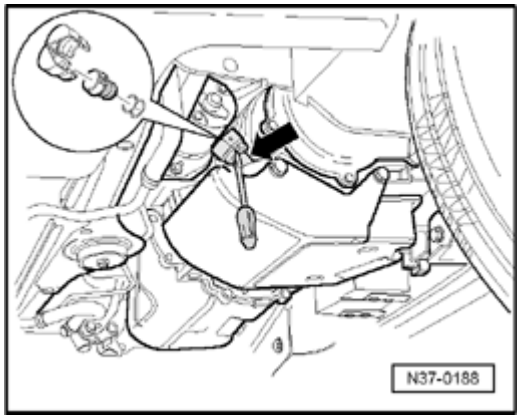

- Pry off cap **- arrow -** with a screwdriver for protection of sealing plug. While doing so, locking mechanism of cap will be destroyed, therefore always replace cap.

Note:

- *With some transmissions a cap with a clip bolting device is installed. This cap can be reused.*

- Remove sealing plug from filler tube.

- Add ATF using ATF filler tool V.A.G 1924/ until ATF exits from check hole **- arrow -** .

Fill up only following VW ATF:

Container size 0.5 L -part number G 052 162 A1

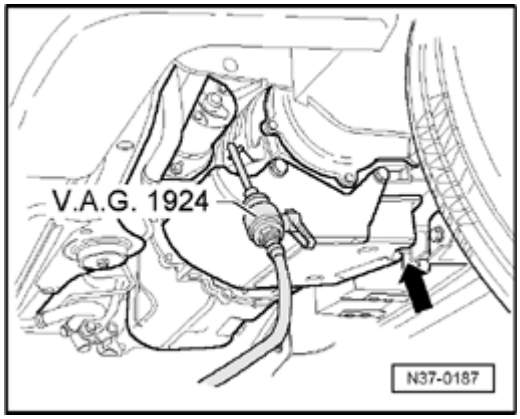

Container size 1.0 L -part number G 052 162 A2

***Note**:*

- *Adding to little or too much ATF impairs functioning of transmission.*

- Cut seal **- arrow -** of locking bolt with a side cutter and remove seal.

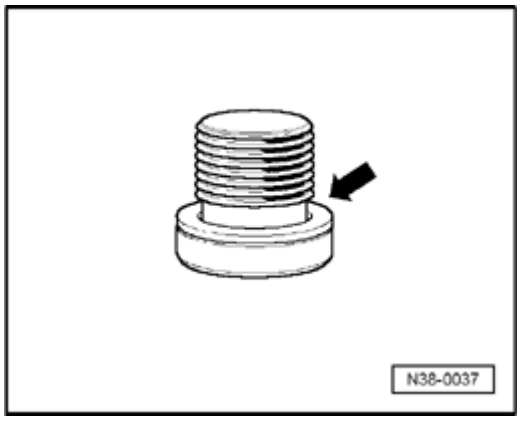

- Install locking bolt with new seal and screw in hand-tight.

- Tighten locking bolt **- arrow 1 -** with new seal to 15 Nm.

- Plug sealing plugs onto filler tube until locking straps engage, or

- Plug sealing plugs onto filler tube and secure with a new cap **- arrow 2 -** .

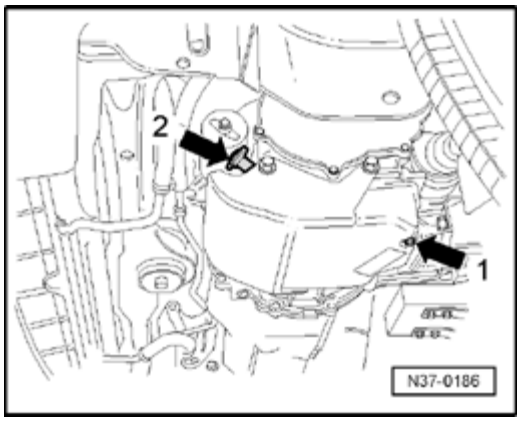

- Lock cap.

***Note**:*

- *Cap without clip bolting device must always be replaced. cap secures sealing plug.*
- *With some transmissions a cap with a clip bolting device is installed. This cap can be reused.*

End Output

Indicated on display:

Read measuring value block 5 -
40 ° C 0011011 0 900 RPM

- → Press button.

Indicated on display:

Rapid data transfer HELP
Select function XX

- Buttons 0 and 6 press. (Press 06 to select "End Output" function.

Indicated on display:

Rapid data transfer Q
06 End Output

- Press Q button to confirm input.

Indicated on display:

Rapid data transfer Help
Enter address word XX

Automatic transmission, changing ATF

Vehicles ➤ 12.94 with 096 transmissions

Use following VW ATF (yellowish color):

- Container size 0.5 L -part number G 052 162 A1
- Container size 1.0 L -part number G 052 162 A2

***Note**:*

- *Current supplies of ATF Dextron II can be used up in transmissions until December 1994.*

Required special tools and equipment

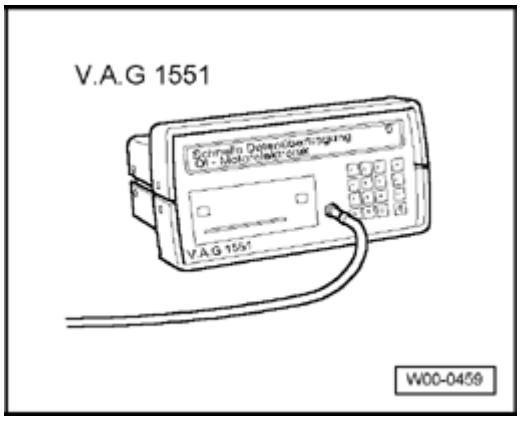

- VAG1551 Scan Tool (ST) V.A.G 1551/

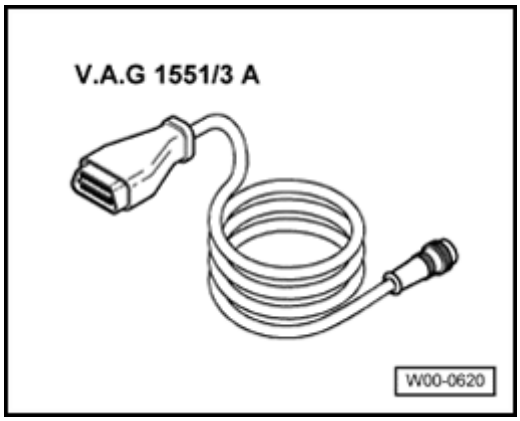

- adapter cable V.A.G 1551/3 A

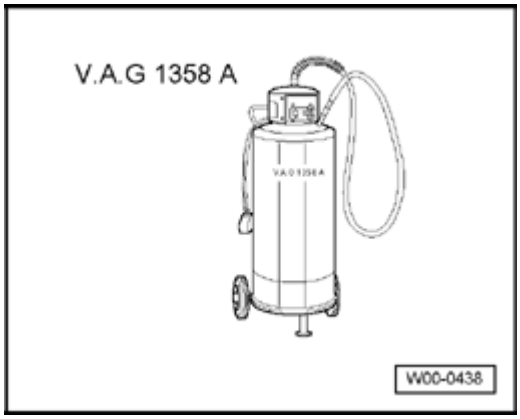

- V.A.G1358A and sensor V.A.G 1358/ A2

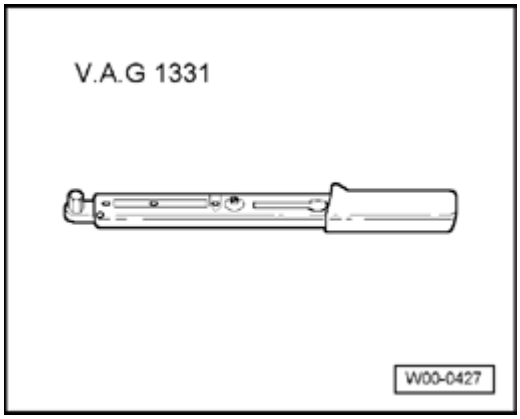

- Torque wrench V.A.G 1331/ (5 - 50 Nm)

Perform following work procedure:

- Extract ATF using probe V.A.G 1358/ A2 and V.A.G1358 .

***Note**:*

- *Observe disposal regulations*
- *Engine must not be started without ATF and vehicle must not be towed*

- Remove oil pan with ATF-strainer.

- Remove spacers from old oil pan seal.

- Clean oil pan.

Pay attention to cleanliness during following installation!

- Snap new seal into new ATF-strainer.

- Snap removed spacers into new oil pan seal.

- Install new ATF-strainer with new seal. Tightening torque for securing bolts: 8 Nm.

- Install oil pan with new seal. Make sure that spacers are fastened. Tightening torque for securing bolts: 12 Nm.

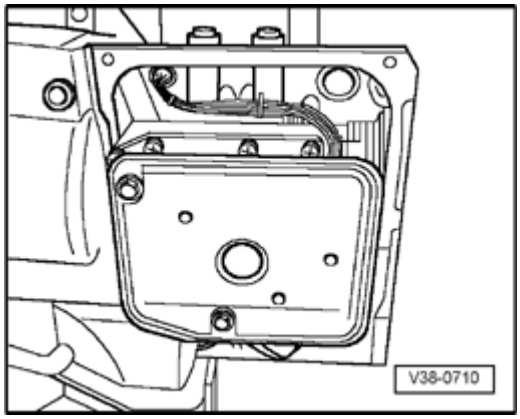

- Next, add 3.0L ATF (replacement capacity) using a funnel.

***Note**:*

- *To wipe dipstick off a lint-free cloth must be used*
- *Adding to little or too much ATF impairs functioning of transmission.*

- Shift once into all selector lever positions while standing and with engine running.

- Check ATF level using dipstick.

Test requirements:

- Vehicle on level ground
- Hand brake is engaged
- Selector lever in "P"
- Engine running at idle.

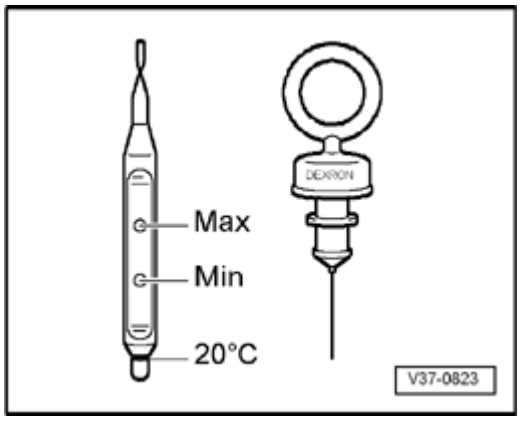

- ATF must be filled up in cold condition at least up to 20 ° C-marking, otherwise add ATF.

- Bring ATF to a temperature of 50 ... 70 ° C. temperature will be measured using Scan Tool (ST) V.A.G 1551/ as follows:

- Let engine run at idle.

Connect Scan Tool (ST) V.A.G 1551/ using adapter cable V.A.G 1551/3 A (⇒ 01-5, Connecting scan tool VAG 1551:).

At Scan Tool (ST) V.A.G 1551/ :

Indicated on display:

VAG - On Board Diagnostic (OBD) HELP

1- Rapid data transfer*

or

VAG - On Board Diagnostic (OBD) HELP

2- Blink code output*

* Two operating modes are displayed alternately

- Press button -1- to select "Rapid data transfer" operating mode.

Indicated on display:

Rapid data transfer HELP

Enter address word XX

- Press buttons 0 and 2 for address word "Transmission electronics" and confirm input with Q button.

Indicated on display:

Rapid data transfer Q
02 Transmission Electronics

- Press Q button to confirm input.

Indicated on display:

096927733BA AG3 transmission 096 2754
Coding 00000 WSC 00000

control module identification, coding, and Workshop Code (WSC) of Scan Tool (ST) V.A.G 1551/ are indicated:

If displayed:

Control module not responding! HELP

- Press HELP button to print out an overview of all of possible malfunction causes.

- Enter address word 02 for Transmission Electronics again after repairing malfunction and press Q button to confirm.

Indicated on display:

096927733BA AG3 transmission 096 2754
Coding 00000 WSC 00000

- Press → -button.

Indicated on display:

Rapid data transfer HELP
Select function XX

- Press buttons 0 and 8 for function "Read measuring value block" and confirm input with Q button.

Indicated on display:

Rapid data transfer Q
08 - Read measuring value block

- Press Q button to confirm input.

Indicated on display:

Read measuring value block
Enter display group number XXX

- Press buttons -0-, -0- and -5-. (Press 005 to select "Display group number 005" .)

Indicated on display:

Read measuring value block Q
Enter display group number 005

- Press Q button to confirm input.

ATF temperature in ° C appears in display field 1 (exact measuring value only starting from 50 ° C).

Read measuring value block 1

1 2 3 4

- Check ATF level at a temperature of 50 ... 70 ° C using dipstick. ATF level must be between min. and max. marking of dipstick.

- If ATF level is too low, add ATF using a funnel.

- If ATF level is too high, extract ATF using probe V.A.G 1358/ A2 and V.A.G1358 .

- Shift once into all selector lever positions while standing and with engine running.

- Check ATF level again (at 50 ... 70 ° C)

At Scan Tool (ST) V.A.G 1551/ :

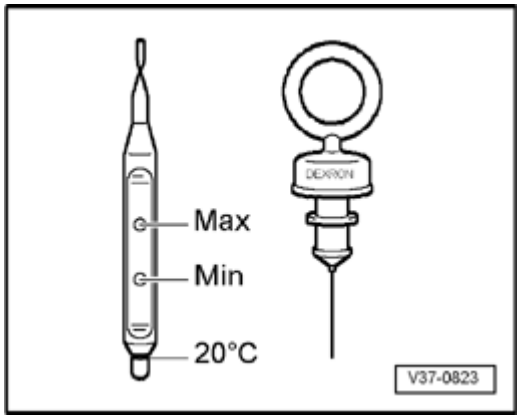

- → Press button.

Indicated on display:

Rapid data transfer HELP

Select function XX

- Press buttons 0 and 6 for function "End data transfer" and confirm input with Q button.

- Switch off ignition and disconnect diagnostic connector.

Power steering fluid level, checking

Fluid, when cold:

Perform following work procedure:

- With engine not running, bring front wheels into straight-ahead position.

- Unscrew reservoir cap **- arrow -** with dipstick.

- Clean off dipstick with a clean rag.

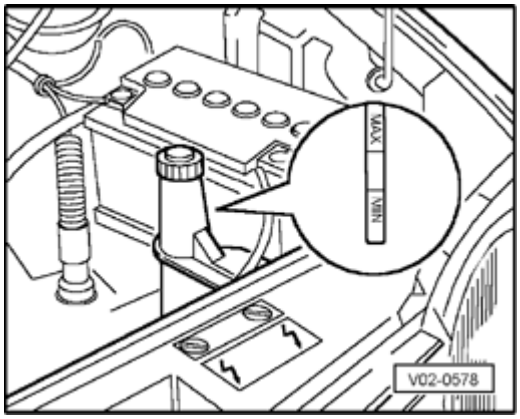

- Tighten cap by hand and remove again.

***Note**:*

- *Fluid level is only valid if cap has been screwed on.*

- Check oil level: Fluid level must be between "MIN" and "MAX" markings.

***Note**:*

- *If fluid level is above specified range, oil must be suctioned off.*
- *If oil level is below specified area, then hydraulic system must be checked for leaks (repair measure). It is not enough to simply top off with fluid.*
- *If hydraulic system is leak-free top-up with G 002 000 oil.*

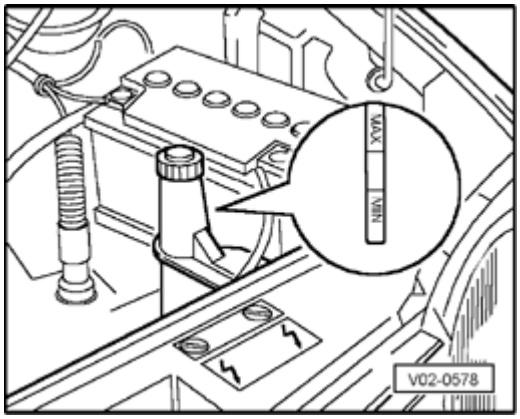

- Screw cap on hand tight.

Fluid, at operating temperature (from approx. 50 °):

Perform following work procedure:

- With engine not running, bring front wheels into straight-ahead position.

- Unscrew reservoir cap with fitted dipstick.

- Clean off dipstick with a clean rag.

- Tighten cap by hand and remove again.

***Note**:*

- *Fluid level is only valid if cap has been screwed on.*

- Check oil level: Fluid level must be between "MIN" and "MAX" markings.

***Note**:*

- *If oil level is above MA . marking, oil must be extracted.*

- *If oil level is below MIN. marking, then hydraulic system must be checked for leaks (repair measure). It is not enough to simply top off with fluid. If hydraulic system is leak-free top-up with G 002 000 oil.*

- Screw cap on hand tight.

Brake fluid, changing

Required special tools and equipment

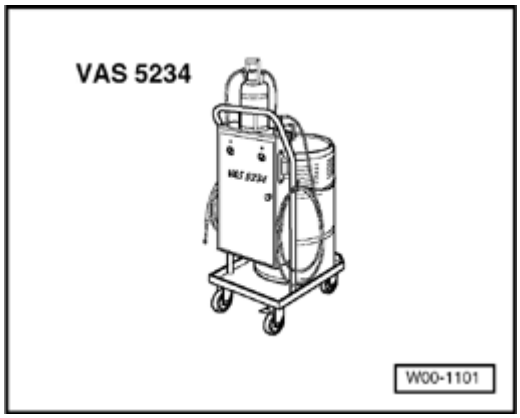

- Brake filling and bleeding tool VAS 5234

or

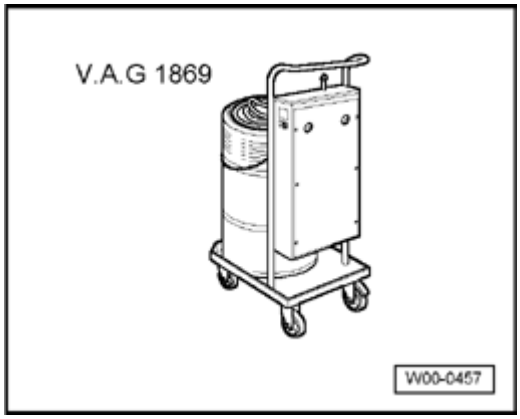

- brake filling and bleeding tool V.A.G 1869/

or

- Brake filling and bleeding tool V.A.G 1869/ with upgrade kit V.A.G 1869/4

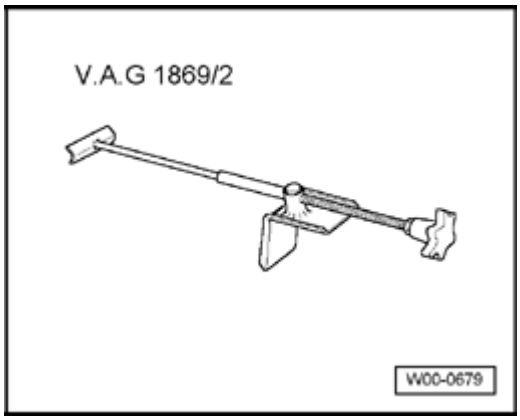

- Brake pedal depressor V.A.G 1869/2

Vehicles with manual transmission:

- bleeder hose V.A.G 1238/B3 670 mm long

Use only new brake fluid with part number B 000 700 A.
(corresponds to US standard FMVSS 116 DOT 4)

Caution!

- ***NEVER bring brake fluid into contact with fluids containing mineral oil (oil, gasoline, cleaning fluids). Oils containing minerals damage seals and sleeves on brake systems.***
- ***Brake fluid is poisonous. Due to it s caustic nature, it must also never be brought into contact with paint.***
- ***Brake fluid is hygroscopic, meaning that it absorbs moisture from surrounding air, and must therefore always be stored in air-tight containers.***
- ***Rinse off any spilled brake fluid using plenty of water.***
- ***Observe disposal regulations!***

Perform following work procedure:

Follow user manual for brake filling and bleeding tool VAS 5234 or brake filling and bleeding tool V.A.G 1869/ !

- Unscrew brake fluid reservoir cap.

- Extract as much brake fluid as possible from brake fluid reservoir using intake hose of brake filling and bleeding tool VAS 5234 or brake filling and bleeding tool V.A.G 1869/ (with upgrade kit).

- With brake filling and bleeding tool V.A.G 1869/ (without upgrade kit) extract as much brake fluid as possible using a suction bottle with built-in strainer.

Note:

- *Make sure that no brake fluid runs through strainer after completing extraction sequence (brake fluid level in reservoir must stop at lower edge of strainer).*

Caution!

Do not reuse, (used) extracted brake fluid.

- Install brake depressor V.A.G 1869/2 between driver s seat and brake pedal, and tension.

- Screw adapter VAS 5234/1 or adapter V.A.G 1869/1 onto brake fluid reservoir.

- Connect filler hose of brake filling and bleeding tool VAS 5234 or brake filling and bleeding tool V.A.G 1869/ to adapter.

Vehicles with manual transmission:

- Remove cover cap from bleeder screw of clutch slave cylinder.

- Connect bleeder hose of collector bottle on bleeder screw of clutch slave cylinder, open bleeder screw, and allow approx. 0.1 liters to flow out. Close bleeder screw and install cover cap onto it.

- Operate clutch pedal repeatedly.

Continuation for all vehicles:

- Remove cover caps from bleeder screws of wheel brake cylinders and brake calipers.

- Connect bleeder hose of collector bottle to rear bleeder screw) , open bleeder screw, and allow corresponding bake fluid quantity to flow out (see table on page ⇒ 01-5, Table - Sequence / quantity of brake fluid:). Close bleeder screw.

) For left-hand drive vehicles, bleed rear right first and for right-hand drive vehicles bleed rear left first.

Repeat work procedure on other side of vehicle at rear.

- Connect bleeder hose of collector bottle to front bleeder screw) , open bleeder screw, and allow corresponding quantity to flow out (see table below). Close bleeder screw.

Repeat work procedure on other side of vehicle at front.

Table - Sequence / quantity of brake fluid:

rder brake calipers (Left and Dri e -L D- e icles)	Brake fluid uantity ic must flo out of brake calipers
Right rear	0.4 to 0.5 liters
Left rear	0.4 to 0.5 liters
Right front	0.4 to 0.5 liters

Left front	0.4 to 0.5 liters
Total uantity [1)]	2 Liter

[1)] with siphoned brake fluid from brake fluid reservoir and replacement capacity of hydraulic clutch mechanism

- Install cover caps to brake caliper bleed screws.

- Move filler lever on VAS5234 or brake filling and bleeding tool V.A.G 1869/ to position **- B -** (see user manual).

- Remove filler hose from adapter.

- Unscrew adapter from brake fluid reservoir.

- Check brake fluid level and correct if necessary.

- Screw sealing cap onto brake fluid reservoir.

- Remove brake pedal depressor.

- Check pedal pressure and brake pedal free play. Free play: Max. $^{1}/_{3}$ of pedal travel

Brake fluid level, checking

Use only new brake fluid with part number B 000 700 A. (corresponds to US standard FMVSS 116 DOT 4)

Caution!

- ***NEVER bring brake fluid into contact with fluids containing mineral oil (oil, gasoline, cleaning fluids). Oils containing minerals damage seals and sleeves on brake systems.***
- ***Brake fluid is poisonous. Due to it s caustic nature, it must also never be brought into contact with paint.***
- ***Brake fluid is hygroscopic, meaning that it absorbs moisture from surrounding air, and must therefore always be stored in air-tight containers.***
- ***Rinse off any spilled brake fluid using plenty of water.***
- ***Observe disposal regulations!***

Note following:

***Note**:*

- *To make sure that brake fluid will not overflow reservoir, max. marking must not be exceeded.*

Inspection service:

- fluid level must always be judged in conjunction with brake pad wear. When vehicle is in use, fluid level tends to drop slightly due to brake pad wear and automatic adjustment.

- When fluid level is at min. marking or just above, it is not necessary to top up if brake pad wear limit is almost reached.

- If pads are new or well above wear limit, then fluid level must be between min. and max. markings.

- If fluid level is below min. marking, brake system must be checked before brake fluid is added (repair measure).

Battery, checking

Required special tools and equipment

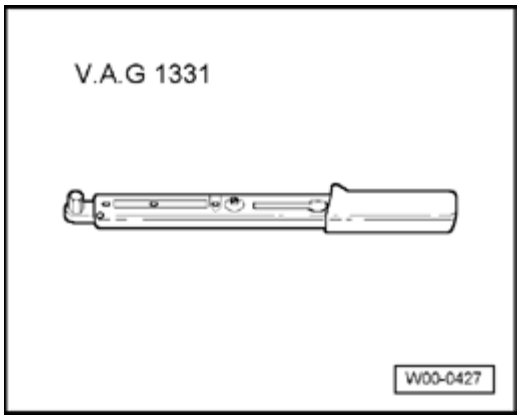

- Torque wrench V.A.G 1331/ (5 - 50 Nm)

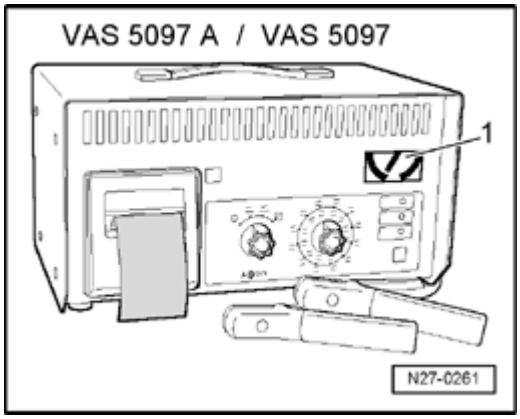

- Battery tester with printer VAS 5097/

or

- Battery tester with printer VAS 5097/

or

- battery tester VAS 5096/

or

- battery tester VAS 5033

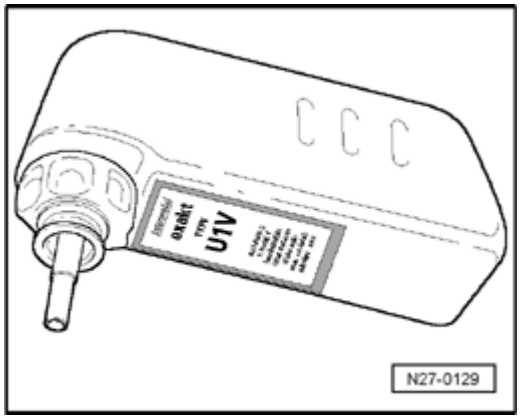

- Battery fill bottle VAS 5045/

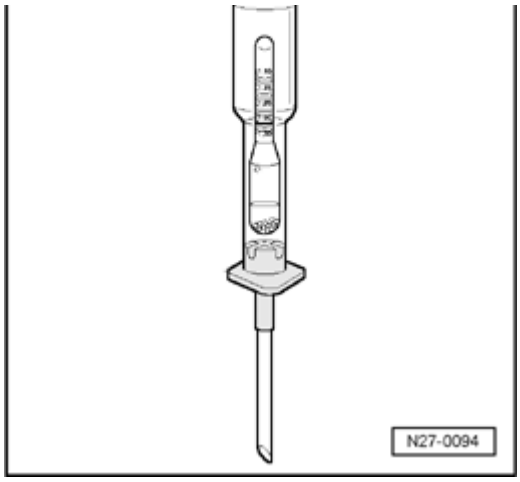

n Commercially available hydrometer

Inspection service (Batteries with magic eye)

Perform a visual check ⇒ 01-5, Performing visual check (all batteries) and check battery condition via "magic eye" ⇒ 01-5, Checking batteries / batteries with magic eye and with top-sealed battery cell plugs .

Inspection service (Batteries without magic eye)

Perform a visual check ⇒ 01-5, Performing visual check (all batteries) and check electrolyte level ⇒ 01-5, Checking acid level (batteries without magic eye) . If topping off with distilled water was required, also perform a battery load test ⇒ 01-5, Battery load check .

Performing visual check (all batteries)

Perform following work procedure:

- Check battery housing for damage. Battery acid can leak out if housing is damaged.

- Check battery terminals (battery terminal connections) for damage. If battery terminals are damaged, contact with wiring connections cannot be guaranteed. This can cause a cable fire and interfere with function of electrical system.

- Check battery for secure seating, tighten securing bolt **- 1 -** on retaining bracket to 22 Nm if necessary.

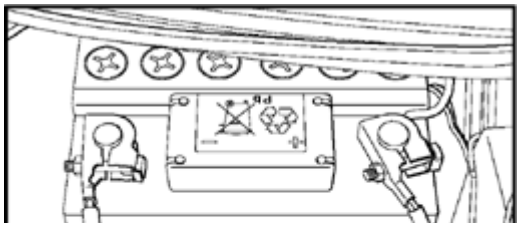

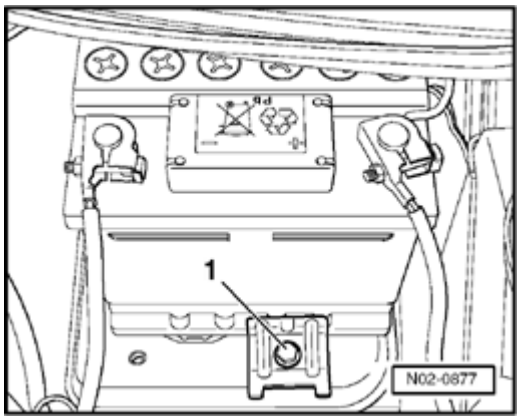

If battery is not securely seated, following dangers exist:

- Shortened service life due to damage from vibration (danger of explosion).
- If battery is not secured properly normal shock and vibration can damage battery plates, which results in premature battery failure.
- battery casing can be damaged by fastening clip (this might possibly allow acid to escape from battery, which would have severe consequences).
- Poor crash safety.

Checking batteries / batteries with magic eye and with top-sealed battery cell plugs

Checking battery / batteries with magic eye and without battery cell plugs ⇒ 01-5, Checking battery / batteries with magic eye and without battery cell plugs

magic eye **- arrow -** gives information regarding acid level and charge level of battery.

- Before performing a visual check, lightly and carefully tap onto magic eye using a screwdriver handle.

Air bubbles, which can affect display, are dispersed by doing this.

Reading colored display of "magic eye" will therefore be more accurate.

***Note**:*

- *magic eye can be located at various positions on battery.*

- *Three different color indications are possible:*

Green → battery is sufficiently charged.

Black → no charge or charge too low (repair measure).

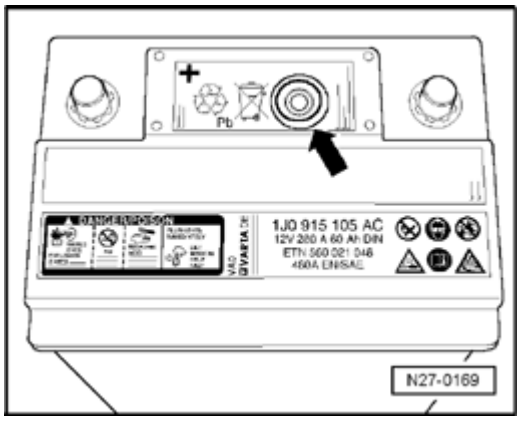

Colorless or yellow → critical acid level reached, distilled water must be topped up ⇒ 01-5, Topping off distilled water (batteries with magic eye) . Then, perform a battery load test ⇒ 01-5, Battery load check .

***Note**:*

- *If battery is older than 5 years and magic eye is a light color or a yellow like color then replace battery after consulting customer.*

Battery load check

***Note**:*

- *Following description refers to Batterie tester with printer VAS 5097/ If battery load test is performed with another battery tester ⇒ user manual for respective battery tester.*

- *When using battery tester VAS 5097 A or Battery tester with printer VAS 5097/ it is not necessary to remove battery. ou also do not have to disconnect battery.*

- Switch ignition off.

- Connect tester cable clamps to battery terminal. ⇒ *User manual for battery tester*

clips must make good contact with battery terminals.

- load current varies depending on battery capacity, and has to be adjusted on tester. ⇒ *User manual for battery tester*

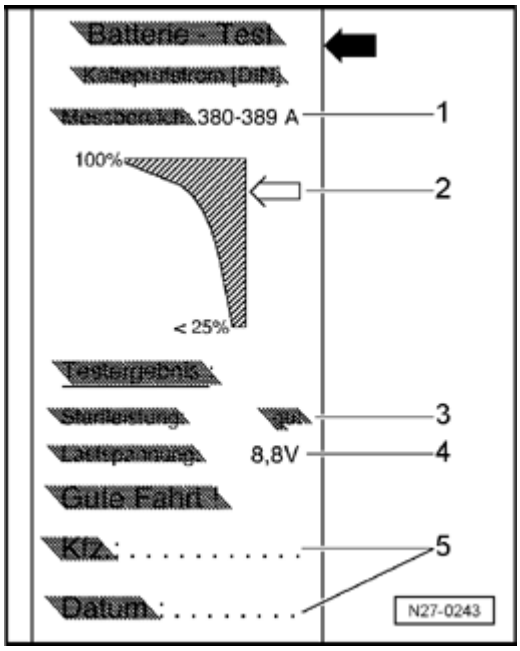

- Perform battery load test according to user manual for battery tester and compare test printout **- arrow -** with following table.

Remarks concerning test printout:

1 - Measuring range set on tester

2 - Diagram (arrow indicates battery state)

3 - Test result

4 - Battery voltage while load test is running

5 - Vehicle data and date (to be completed by person performing test)

After recharging battery, perform a battery load test again.

1) If after charging, display shows "starting output sufficient, starting output poor, starting output very poor or Not testable" , replace battery after consulting customer.

Explanation for battery load test:

Because of high load on battery during this test (a high current flows) battery voltage lowers.

If battery is in good condition, voltage drops only to minimum voltage.

If battery is faulty or only faintly charged, battery voltage will

drop rapidly to below displayed minimum voltage.

After test has been performed, voltage will remain at this low value for a long time, and will climb back up only very slowly.

Printout from battery tester	Inspection ser ice
Starting output very good	Battery OK
Starting output good	Battery OK
Starting output sufficient	Recharge battery 1)
Starting output poor	Recharge battery 1)
Starting output very poor	Recharge battery 1)
Not testable	Recharge battery 1)

Topping off distilled water (batteries with magic eye)

To avoid electrolyte impurities, which can increase self-discharge of battery, only distilled water may be added to increase acid level.

Perform following work procedure:

- Remove foil over sealing plug.

- Unscrew battery sealing plugs.

- Using battery fill bottle VAS 5045/ fill with distilled water up to max.-marking.

Note:

- *Construction of filler tube of battery filler bottle VAS 5045/ prevents overfilling of battery cells and escaping of battery acid. When max. fill level is reached, inflow of distilled water into cells is interrupted.*

- *Too low an electrolyte level (below min.-marking) causes a loss of battery capacity (power), due to cell plates drying out. If cell-plates are not surrounded with electrolyte (sulfuric acid), plates, plate straps, and cell connectors will corrode. battery will not function as a consequence of this corrosion. battery becomes unusable.*

- *If electrolyte level is too high (above max.-marking), electrolyte (a mixture of sulfuric acid and water) escapes and causes damage outside battery, for example to functional parts in engine compartment.*

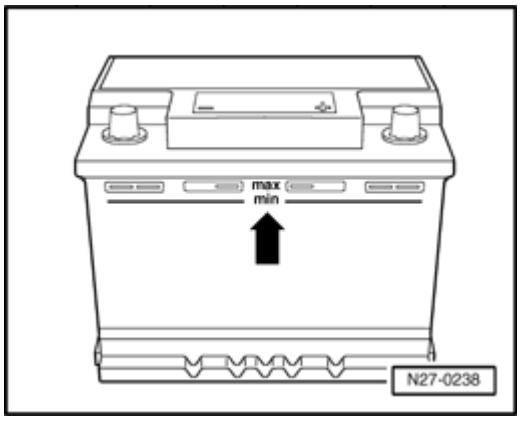

- Screw in battery sealing plugs.

Checking acid level (batteries without magic eye)

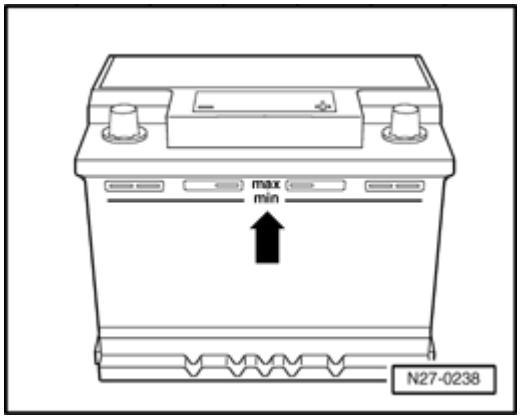

Markings on battery housing **- arrow -**

Note:

- *Maintaining correct electrolyte level in battery is an important factor affecting length of battery s service life.*

Electrolyte level too low

Note:

- *Too low an electrolyte level (below min.-marking) causes a loss of battery capacity (power), due to cell plates drying out. If cell-plates are not surrounded with electrolyte (sulfuric acid), plates, plate straps, and cell connectors will corrode. battery will not function as a consequence of this corrosion. battery becomes unusable.*

To avoid electrolyte impurities, which can increase self-discharge of battery, only distilled water may be added to increase acid level.

- Unscrew battery sealing plugs.

- Using battery fill bottle VAS 5045/ fill with distilled water up to max.-marking.

***Note**:*

- *Construction of filler tube of battery filler bottle VAS 5045/ prevents overfilling of battery cells and escaping of battery acid. When max. fill level is reached, inflow of distilled water into cells is interrupted.*

- Screw in battery sealing plugs.

Electrolyte level too high

***Note**:*

- *If electrolyte level is too high (above max.-marking), electrolyte (a mixture of sulfuric acid and water) escapes and causes damage outside battery, for example to functional parts in engine compartment.*

- Unscrew battery sealing plugs.

At an acid level that is too high (overfilling), i.e. it lies above inner acid level marking (plastic plug) or above exterior max.-marking:

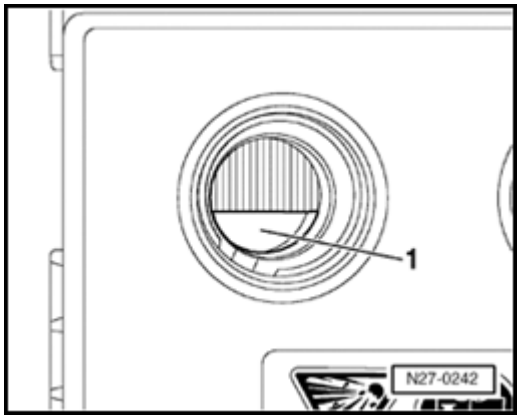

- Use hydrometer to extract off electrolyte until its level has reached mark on plastic peg **- 1 -** or max. mark.

***Note**:*

- *Observe disposal regulations*

- Screw in battery sealing plugs.

Checking battery / batteries with magic eye and without battery cell plugs

These batteries can be recognized by "magic eye" **- 1 -** and a cover **- 2 -** (as shown in illustration).

***Note**:*

- *magic eye can be located at various positions on battery.*

Caution!

Cover is used only for filling during production. Cover must not be removed under any circumstances, otherwise battery may be damaged. battery becomes unusable.

magic eye gives information regarding acid level and charge level of battery.

- Before performing a visual check, lightly and carefully tap onto magic eye using a screwdriver handle.

Air bubbles, which can affect display, are dispersed by doing this.

Reading colored display of "magic eye" will therefore be more accurate. Three different color indications are possible:

- Green → battery is sufficiently charged.

- Black → no charge or charge too low, battery must be charged (repair measure).

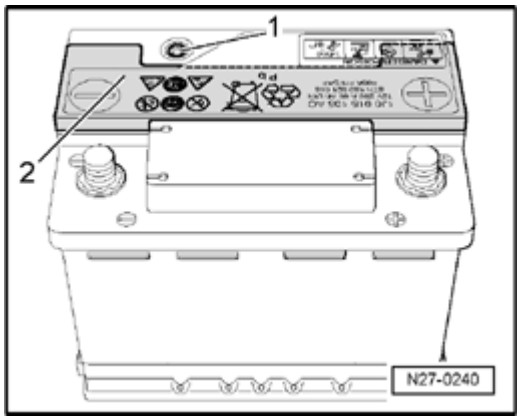

- Colorless or yellow → battery must be replaced.

Idle speed (Diesel engine code AA): Checking

Required special tools and equipment

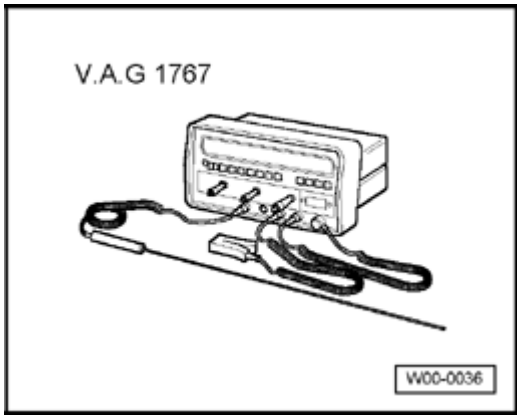

- Ignition tester V.A.G 1767/

or

- Ignition tester V.A.G 1367

Test- and adjustment requirements and specified values ⇒ *Emissions test*

Perform following work procedure:

- Ignition tester V.A.G 1367 or Ignition tester V.A.G 1767/

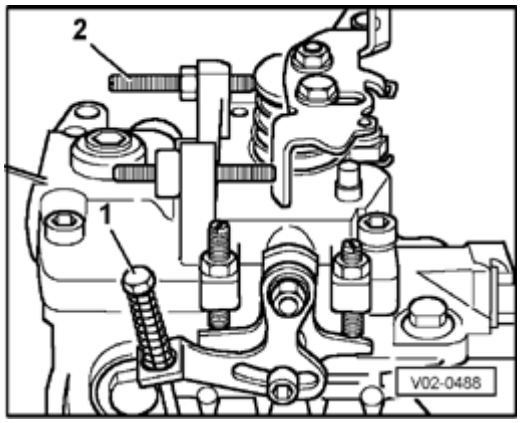

- Check idle speed and adjust as necessary by turning idle speed adjusting screw **- 1 -** .

Headlight setting, checking

Required special tools and equipment

- headlight adjuster VAS 5046/

or

- headlight adjuster VAS 5047/

or

- headlight adjuster VAS 5208

or

- headlight adjuster VAS 5209

Following test- and adjustment instructions are applicable to all countries. But national legislation and regulations of respective country is to be adhered to.

Test- and adjustment requirements:

- Tire pressure OK.
- Lenses must not be damaged or dirty.
- Reflectors and bulbs OK.
- Vehicle load must be established.

Load: With one person or 165 lbs (75 kg) on driver s seat with otherwise unloaded vehicle (curb weight).

Curb weight is weight of vehicle ready for operation with completely filled fuel tank (at least 90 %), including weight of all equipment items carried for operation (e.g. spare wheel, tool, vehicle jack, fire extinguisher etc.).

If fuel tank is not filled to at least 90 %, establish load as follows:

- Check fill level of fuel tank via fuel gauge. Determine additional weight according to following table and place weight in luggage compartment.

Table of filling quantity:

Fill le el of	Additional eig t

fuel gauge	in lbs (kg)
1/4	100 (45)
1/2	66 (30)
3/4	33 (15)
Full	0 (0)

Example:

If tank is filled half way, an additional weight of 66 lbs (30 kg) must be placed into luggage compartment.

***Note**:*

- *As additional weight it is recommended to use fuel canisters filled with water (a 5-liter fuel canister weighs approximately 11 lbs (5 kg)).*

Vehicle must be rolled for several meters or front and rear suspension must be bounced several times so that springs settle.

- Vehicle and headlight adjuster must be on a level surface. ⇒ *User manual for headlight adjuster.*
- Vehicle and headlight adjuster must be aligned.
- Inclination measure must be set.

Inclination measure:

Inclination measure in "%" is embossed at top of headlight housing. Main headlights must be adjusted according to this measure. percentage information on sticker is based on a projection distance of 10 meters. For example: inclination of 1.2 % converts to approx. 12 cm.

Inclination measure for fog lights: 20 cm

- Thumbwheel for headlight range control must be in base position (-).

Checking headlight setting (with new test screen without 15 ° -setting line)

Headlights:

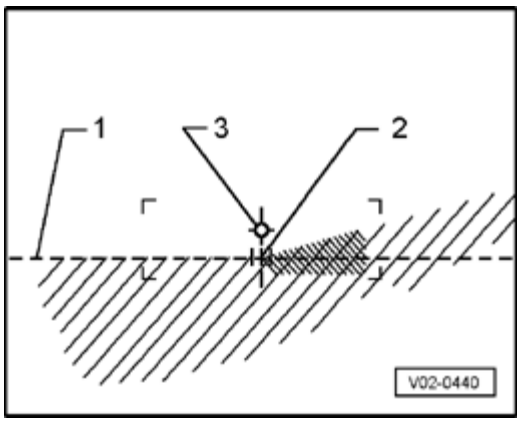

- With low beam switched on, check whether horizontal light-dark border contacts hyphenated line **- 1 -** of test surface.

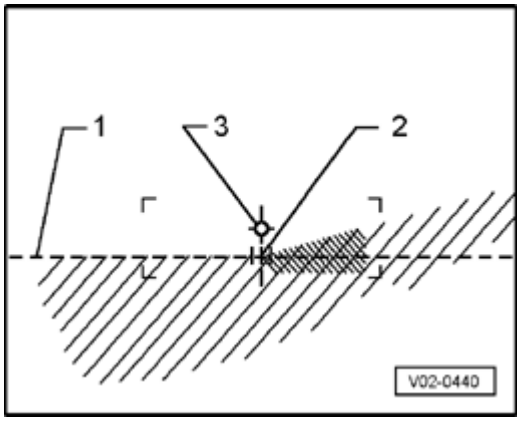

- Check whether break-away point **- 2 -** between left horizontal part and rising part on right of light-dark border runs vertically through central point **- 3 -** . Bright core of light beam must be on right of vertical line.

Note:

- *To make it easier to find break-away point **- -** cover and uncover left half of headlight (as viewed when looking forward) a few times. Next, check low beam again.*

- *After correct adjustment of low beams center point of light beam of high beams must lie on central mark **- 3 -** .*

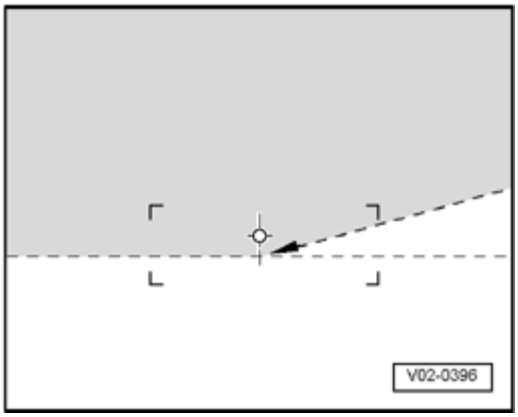

- *For previous test screen with 15 ° -setting line, adjust as for new test screen. To avoid incorrect settings ignore 15 ° -setting line.*

Fog lights:

- Check whether upper light-dark border touches setting line and runs across complete test screen width horizontally.

Other auxiliary headlights:

Later inserted auxiliary headlights of other systems must be checked and adjusted according to guidelines valid for them.

Headlights, adjusting

Headlight (left)

1 - Height adjustment

2 - Horizontal adjustment

- Perform adjustment using appropriate screwdriver (do not damage adjustment wheel).

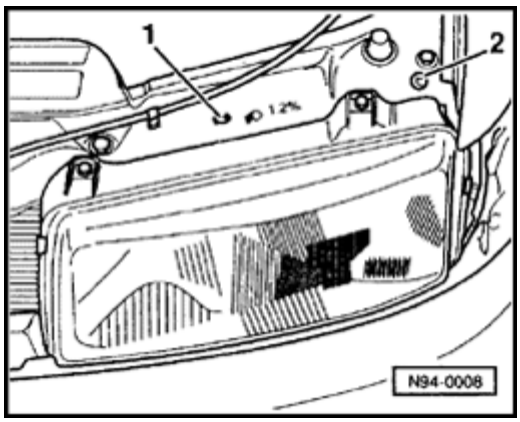

Both adjustment wheels on right headlight are allocated symmetrically.

***Note**:*

- *Also check whether reflectors in both headlights adjust themselves uniformly when operating headlight range control.*

Fog light (left)

- Turn adjusting screw toward left (arrow) to lower beam height. Horizontal adjustment is not possible.

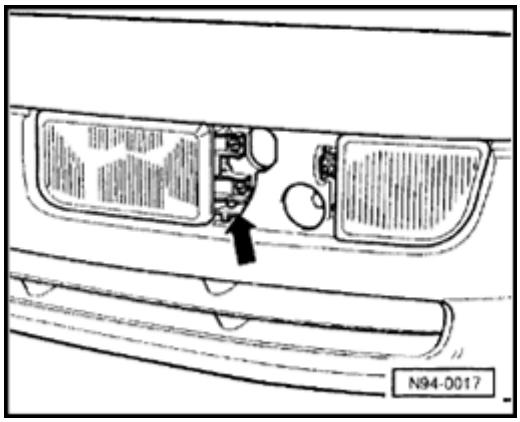

Adjusting screw on right headlight is allocated symmetrically.

Road test, performing

To what extent following can be checked is dependent upon vehicle equipment and local conditions (urban/country).

Following should be checked by means of a road test:

- Engine: Output, misfiring, idling speed, acceleration

- Clutch: Pulling away, pedal pressure, odors

- Gear selection: Ease of operation, shift lever position

- Automatic transmission: Selector lever position, shift lock / ignition key removal lock, shift behavior, instrument panel cluster display

- Foot-operated and hand-operated parking brake: Function, free travel and effectiveness, pulling to one side, juddering, squeal

- ABS function: A pulsing at brake pedal must be felt when performing ABS controlled braking

- Steering: Function, steering free play, steering wheel centralized when wheels are in straight ahead position

- Sunroof: Function

- Radio, Radio/Navigation system: Function, Reception, GALA, interference

- Multifunction indicator (MFI): Functions

- A/C system: Function

- Vehicle: Moving off line when travelling straight ahead (level road)

- Imbalance: Wheels, drive shafts, prop shafts

- Wheel bearings: Noises

- Engine: Hot starting behavior